PEARSON NEW INTERNATIONAL EDITION

Electronics Fundamentals
Circuits, Devices and Applications

Thomas L. Floyd David L. Buchla

Eighth Edition

www.EngineeringBooksPdf.com

Pearson New International Edition

Electronics Fundamentals
Circuits, Devices and Applications
Thomas L. Floyd David L. Buchla
Eighth Edition

PEARSON

www.EngineeringBooksPdf.com

Pearson Education Limited
Edinburgh Gate
Harlow
Essex CM20 2JE
England and Associated Companies throughout the world

Visit us on the World Wide Web at: www.pearsoned.co.uk

© Pearson Education Limited 2014

All rights reserved. No part of this publication may be reproduced, stored in a retrieval system, or transmitted in any form or by any means, electronic, mechanical, photocopying, recording or otherwise, without either the prior written permission of the publisher or a licence permitting restricted copying in the United Kingdom issued by the Copyright Licensing Agency Ltd, Saffron House, 6–10 Kirby Street, London EC1N 8TS.

All trademarks used herein are the property of their respective owners. The use of any trademark in this text does not vest in the author or publisher any trademark ownership rights in such trademarks, nor does the use of such trademarks imply any affiliation with or endorsement of this book by such owners.

PEARSON

ISBN 10: 1-292-02568-9
ISBN 13: 978-1-292-02568-1

British Library Cataloguing-in-Publication Data
A catalogue record for this book is available from the British Library

Printed in the United States of America

www.EngineeringBooksPdf.com

Table of Contents

1. Quantities and Units
Thomas L. Floyd/David M. Buchla 1

2. Voltage, Current, and Resistance
Thomas L. Floyd/David M. Buchla 23

3. Ohm's Law, Energy, and Power
Thomas L. Floyd/David M. Buchla 77

4. Series Circuits
Thomas L. Floyd/David M. Buchla 119

5. Parallel Circuits
Thomas L. Floyd/David M. Buchla 177

6. Series-Parallel Circuits
Thomas L. Floyd/David M. Buchla 229

7. Magnetism and Electromagnetism
Thomas L. Floyd/David M. Buchla 297

8. Introduction to Alternating Current and Voltage
Thomas L. Floyd/David M. Buchla 341

9. Capacitors
Thomas L. Floyd/David M. Buchla 401

10. RC Circuits
Thomas L. Floyd/David M. Buchla 459

11. Inductors
Thomas L. Floyd/David M. Buchla 517

12. RL Circuits
Thomas L. Floyd/David M. Buchla 557

13. RLC Circuits and Resonance
Thomas L. Floyd/David M. Buchla 603

www.EngineeringBooksPdf.com

14. Time Response of Reactive Circuits
Thomas L. Floyd/David M. Buchla **659**

15. Diodes and Applications
Thomas L. Floyd/David M. Buchla **703**

16. Transistors and Applications
Thomas L. Floyd/David M. Buchla **767**

17. The Operational Amplifier
Thomas L. Floyd/David M. Buchla **835**

18. Basic Op-Amp Circuits
Thomas L. Floyd/David M. Buchla **877**

19. Special-Purpose Op-Amp Circuits
Thomas L. Floyd/David M. Buchla **927**

20. Measurement, Conversion, and Control
Thomas L. Floyd/David M. Buchla **967**

Table of Standard Resistor Values
Thomas L. Floyd/David M. Buchla **1009**

Capacitor Color Coding and Marking
Thomas L. Floyd/David M. Buchla **1011**

Norton's Theorem and Millman's Theorem
Thomas L. Floyd/David M. Buchla **1017**

Field-Programmable Analog Arrays (FPAAs)
Thomas L. Floyd/David M. Buchla **1023**

NI Multism for Circuit Simulation
Thomas L. Floyd/David M. Buchla **1033**

Glossary
Thomas L. Floyd/David M. Buchla **1039**

Index **1049**

www.EngineeringBooksPdf.com

Quantities and Units

CHAPTER OUTLINE

1 Scientific and Engineering Notation
2 Units and Metric Prefixes
3 Metric Unit Conversions
4 Measured Numbers
5 Electrical Safety

CHAPTER OBJECTIVES

- Use scientific notation to represent quantities
- Work with electrical units and metric prefixes
- Convert from one unit with a metric prefix to another
- Express measured data with the proper number of significant digits
- Recognize electrical hazards and practice proper safety procedures

KEY TERMS

- Scientific notation
- Power of ten
- Exponent
- Engineering notation
- SI
- Metric prefix
- Error
- Accuracy
- Precision
- Significant digit
- Round off
- Electrical shock

VISIT THE COMPANION WEBSITE

Study aids for this chapter are available at http://www.pearsonhighered.com/floyd/

INTRODUCTION

You must be familiar with the units used in electronics and know how to express electrical quantities in various ways using metric prefixes. Scientific notation and engineering notation are indispensable tools whether you use a computer, a calculator, or do computations the old-fashioned way.

Streeter Photography/Alamy

From Chapter 1 of *Electronics Fundamentals: Circuits, Devices, and Applications*, Eighth Edition, Thomas L. Floyd, David M. Buchla. Copyright © 2010 by Pearson Education, Inc. Published by Pearson Prentice Hall. All rights reserved.

www.EngineeringBooksPdf.com

1 SCIENTIFIC AND ENGINEERING NOTATION

In the electrical and electronics fields, you will encounter both very small and very large quantities. For example, electrical current can range from hundreds of amperes in power applications to a few thousandths or millionths of an ampere in many electronic circuits. This range of values is typical of many other electrical quantities also. Engineering notation is a specialized form of scientific notation. It is used widely in technical fields to express large and small quantities. In electronics, engineering notation is used to express values of voltage, current, power, resistance, and other quantities.

After completing this section, you should be able to

- **Use scientific notation to represent quantities**
  - Express any number using a power of ten
  - Perform calculations with powers of ten

Scientific notation* provides a convenient method for expressing large and small numbers and for performing calculations involving such numbers. In scientific notation, a quantity is expressed as a product of a number between 1 and 10 (one digit to the left of the decimal point) and a power of ten. For example, the quantity 150,000 is expressed in scientific notation as 1.5×10^5, and the quantity 0.00022 is expressed as 2.2×10^{-4}.

Powers of Ten

Table 1 lists some powers of ten, both positive and negative, and the corresponding decimal numbers. The **power of ten** is expressed as an *exponent* of the *base* 10 in each case.

Base, Exponent

$$10^x$$

An **exponent** is a number to which a base number is raised. The exponent indicates the number of places that the decimal point is moved to the right or left to produce the decimal number. For a positive power of ten, move the decimal point to the right to get the equivalent decimal number. As an example, for an exponent of 4,

$$10^4 = 1 \times 10^4 = 1.0000. = 10{,}000.$$

TABLE 1

Some positive and negative powers of ten.

$10^6 = 1{,}000{,}000$	$10^{-6} = 0.000001$
$10^5 = 100{,}000$	$10^{-5} = 0.00001$
$10^4 = 10{,}000$	$10^{-4} = 0.0001$
$10^3 = 1{,}000$	$10^{-3} = 0.001$
$10^2 = 100$	$10^{-2} = 0.01$
$10^1 = 10$	$10^{-1} = 0.1$
$10^0 = 1$	

This icon indicates selected websites for further information on topics in this section. See the Companion Website provided with this text.

***The bold terms in color are key terms and are defined at the end of the chapter.**

www.EngineeringBooksPdf.com

For a negative power of ten, move the decimal point to the left to get the equivalent decimal number. As an example, for an exponent of −4,

$$10^{-4} = 1 \times 10^{-4} = .0001. = 0.0001$$

The negative exponent does not indicate that a number is negative; it simply moves the decimal point to the left.

EXAMPLE 1

Express each number in scientific notation:

(a) 240 **(b)** 5100 **(c)** 85,000 **(d)** 3,350,000

Solution In each case, move the decimal point an appropriate number of places to the left to determine the positive power of ten.

(a) $240 = \mathbf{2.4 \times 10^2}$ **(b)** $5100 = \mathbf{5.1 \times 10^3}$

(c) $85{,}000 = \mathbf{8.5 \times 10^4}$ **(d)** $3{,}350{,}000 = \mathbf{3.35 \times 10^6}$

*Related Problem** Express 750,000,000 in scientific notation.

*Answers are at the end of the chapter.

EXAMPLE 2

Express each number in scientific notation:

(a) 0.24 **(b)** 0.005 **(c)** 0.00063 **(d)** 0.000015

Solution In each case, move the decimal point an appropriate number of places to the right to determine the negative power of ten.

(a) $0.24 = \mathbf{2.4 \times 10^{-1}}$ **(b)** $0.005 = \mathbf{5 \times 10^{-3}}$

(c) $0.00063 = \mathbf{6.3 \times 10^{-4}}$ **(d)** $0.000015 = \mathbf{1.5 \times 10^{-5}}$

Related Problem Express 0.00000093 in scientific notation.

EXAMPLE 3

Express each of the following numbers as a normal decimal number:

(a) 1×10^5 **(b)** 2.9×10^3 **(c)** 3.2×10^{-2} **(d)** 2.5×10^{-6}

Solution Move the decimal point to the right or left a number of places indicated by the positive or the negative power of ten respectively.

(a) $1 \times 10^5 = \mathbf{100{,}000}$ **(b)** $2.9 \times 10^3 = \mathbf{2900}$

(c) $3.2 \times 10^{-2} = \mathbf{0.032}$ **(d)** $2.5 \times 10^{-6} = \mathbf{0.0000025}$

Related Problem Express 8.2×10^8 as a normal decimal number.

www.EngineeringBooksPdf.com

Calculations With Powers of Ten

The advantage of scientific notation is in addition, subtraction, multiplication, and division of very small or very large numbers.

Addition The steps for adding numbers in powers of ten are as follows:

1. Express the numbers to be added in the same power of ten.
2. Add the numbers without their powers of ten to get the sum.
3. Bring down the common power of ten, which becomes the power of ten of the sum.

EXAMPLE 4 Add 2×10^6 and 5×10^7 and express the result in scientific notation.

Solution

1. Express both numbers in the same power of ten: $(2 \times 10^6) + (50 \times 10^6)$.
2. Add $2 + 50 = 52$.
3. Bring down the common power of ten (10^6); the sum is $52 \times 10^6 = \mathbf{5.2 \times 10^7}$.

Related Problem Add 4.1×10^3 and 7.9×10^2.

Subtraction The steps for subtracting numbers in powers of ten are as follows:

1. Express the numbers to be subtracted in the same power of ten.
2. Subtract the numbers without their powers of ten to get the difference.
3. Bring down the common power of ten, which becomes the power of ten of the difference.

EXAMPLE 5 Subtract 2.5×10^{-12} from 7.5×10^{-11} and express the result in scientific notation.

Solution

1. Express each number in the same power of ten: $(7.5 \times 10^{-11}) - (0.25 \times 10^{-11})$.
2. Subtract $7.5 - 0.25 = 7.25$.
3. Bring down the common power of ten (10^{-11}); the difference is $\mathbf{7.25 \times 10^{-11}}$.

Related Problem Subtract 3.5×10^{-6} from 2.2×10^{-5}.

Multiplication The steps for multiplying numbers in powers of ten are as follows:

1. Multiply the numbers directly without their powers of ten.
2. Add the powers of ten algebraically (the exponents do not have to be the same).

EXAMPLE 6 Multiply 5×10^{12} by 3×10^{-6} and express the result in scientific notation.

Solution Multiply the numbers, and algebraically add the powers.

$$(5 \times 10^{12})(3 \times 10^{-6}) = 15 \times 10^{12+(-6)} = 15 \times 10^6 = \mathbf{1.5 \times 10^7}$$

Related Problem Multiply 1.2×10^3 by 4×10^2.

www.EngineeringBooksPdf.com

Division The steps for dividing numbers in powers of ten are as follows:

1. Divide the numbers directly without their powers of ten.
2. Subtract the power of ten in the denominator from the power of ten in the numerator (the exponents do not have to be the same).

EXAMPLE 7 Divide 5.0×10^8 by 2.5×10^3 and express the result in scientific notation.

Solution Write the division problem with a numerator and denominator.

$$\frac{5.0 \times 10^8}{2.5 \times 10^3}$$

Divide the numbers and subtract the powers of ten (3 from 8).

$$\frac{5.0 \times 10^8}{2.5 \times 10^3} = 2 \times 10^{8-3} = \mathbf{2 \times 10^5}$$

Related Problem Divide 8×10^{-6} by 2×10^{-10}.

Scientific Notation on a Calculator Entering a number in scientific notation is accomplished on most calculators using the EE key as follows: Enter the number with one digit to the left of the decimal point, press EE, and enter the power of ten. This method requires that the power of ten be determined before entering the number. Some calculators can be placed in a mode that will automatically convert any decimal number entered into scientific notation.

EXAMPLE 8 Enter 23,560 in scientific notation using the EE key.

Solution Move the decimal point four places to the left so that it comes after the digit 2. This results in the number expressed in scientific notation as

$$2.3560 \times 10^4$$

Enter this number on your calculator as follows:

Related Problem Enter the number 573,946 using the EE key.

Engineering Notation

Engineering notation is similar to scientific notation. However, in **engineering notation** a number can have from one to three digits to the left of the decimal point and the power-of-ten exponent must be a multiple of three. For example, the number 33,000 expressed in engineering notation is 33×10^3. In scientific notation, it is expressed as 3.3×10^4. As another example, the number 0.045 is expressed in engineering notation as 45×10^{-3}. In scientific notation, it is expressed as 4.5×10^{-2}. Engineering notation is useful in electrical and electronic calculations that use metric prefixes (discussed in Section 2).

www.EngineeringBooksPdf.com

EXAMPLE 9

Express the following numbers in engineering notation:

(a) 82,000 **(b)** 243,000 **(c)** 1,956,000

Solution In engineering notation,

(a) 82,000 is expressed as $\mathbf{82 \times 10^3}$.

(b) 243,000 is expressed as $\mathbf{243 \times 10^3}$.

(c) 1,956,000 is expressed as $\mathbf{1.956 \times 10^6}$.

Related Problem Express 36,000,000,000 in engineering notation.

EXAMPLE 10

Convert each of the following numbers to engineering notation:

(a) 0.0022 **(b)** 0.000000047 **(c)** 0.00033

Solution In engineering notation,

(a) 0.0022 is expressed as $\mathbf{2.2 \times 10^{-3}}$.

(b) 0.000000047 is expressed as $\mathbf{47 \times 10^{-9}}$.

(c) 0.00033 is expressed as $\mathbf{330 \times 10^{-6}}$.

Related Problem Express 0.0000000000056 in engineering notation.

Engineering Notation on a Calculator Use the EE key to enter the number with one, two, or three digits to the left of the decimal point, press EE, and enter the power of ten that is a multiple of three. This method requires that the appropriate power of ten be determined before entering the number.

EXAMPLE 11

Enter 51,200,000 in engineering notation using the EE key.

Solution Move the decimal point six places to the left so that it comes after the digit 1. This results in the number expressed in engineering notation as

$$51.2 \times 10^6$$

Enter this number on your calculator as follows:

Related Problem Enter the number 273,900 in engineering notation using the EE key.

www.EngineeringBooksPdf.com

SECTION 1 CHECKUP
Answers are at the end of the chapter.

1. Scientific notation uses powers of ten. (True or False)
2. Express 100 as a power of ten.
3. Express the following numbers in scientific notation:
   (a) 4350 **(b)** 12,010 **(c)** 29,000,000
4. Express the following numbers in scientific notation:
   (a) 0.760 **(b)** 0.00025 **(c)** 0.000000597
5. Do the following operations:
   (a) $(1 \times 10^5) + (2 \times 10^5)$ **(b)** $(3 \times 10^6)(2 \times 10^4)$
   (c) $(8 \times 10^3) \div (4 \times 10^2)$ **(d)** $(2.5 \times 10^{-6}) - (1.3 \times 10^{-7})$
6. Enter the numbers expressed in scientific notation in Problem 3 into your calculator.
7. Express the following numbers in engineering notation:
   (a) 0.0056 **(b)** 0.0000000283
   (c) 950,000 **(d)** 375,000,000,000
8. Enter the numbers in Problem 7 into your calculator using engineering notation.

2 UNITS AND METRIC PREFIXES

In electronics, you must deal with measurable quantities. For example, you must be able to express how many volts are measured at a certain test point in a circuit, how much current there is through a conductor, or how much power a certain amplifier delivers. In this section, you are introduced to the units and symbols for most of the electrical quantities that are used throughout the text. Metric prefixes are used in conjunction with engineering notation as a "shorthand" for the certain powers of ten that commonly are used.

After completing this section, you should be able to

- **Work with electrical units and metric prefixes**
  - Name the units for twelve electrical quantities
  - Specify the symbols for the electrical units
  - List the metric prefixes
  - Change a power of ten in engineering notation to a metric prefix
  - Use metric prefixes to express electrical quantities

Electrical Units

Letter symbols are used in electronics to represent both quantities and their units. One symbol is used to represent the name of the quantity, and another is used to represent the unit of measurement of that quantity. Table 2 lists the most important electrical quantities, along with their SI units and symbols. For example, italic *P* stands for *power* and nonitalic (roman) W stands for *watt,* which is the unit of power. In general, italic letters represent quantities and nonitalic letters represent units. Notice that energy is abbreviated with an italic *W* that represents *work;* and both *energy* and *work* have the same unit (the joule). The term **SI** is the French abbreviation for *International System* (*Système International* in French).

www.EngineeringBooksPdf.com

▶ TABLE 2

Electrical quantities and their corresponding units with SI symbols.

QUANTITY	SYMBOL	SI UNIT	SYMBOL
capacitance	C	farad	F
charge	Q	coulomb	C
conductance	G	siemens	S
current	I	ampere	A
energy or work	W	joule	J
frequency	f	hertz	Hz
impedance	Z	ohm	Ω
inductance	L	henry	H
power	P	watt	W
reactance	X	ohm	Ω
resistance	R	ohm	Ω
voltage	V	volt	V

In addition to the common electrical units shown in Table 2, the SI system has many other units that are defined in terms of certain fundamental units. In 1954, by international agreement, *meter, kilogram, second, ampere, degree kelvin,* and *candela* were adopted as the basic SI units (*degree kelvin* was later changed to just *kelvin*). These units form the basis of the mks (for meter-kilogram-second) units that are used for derived quantities and have become the preferred units for nearly all scientific and engineering work. An older metric system, called the cgs system, was based on the centimeter, gram, and second as fundamental units. There are still a number of units in common use based on the cgs system; for example, the gauss is a magnetic flux unit in the cgs system and is still in common usage. In keeping with preferred practice, this text uses mks units, except when otherwise noted.

Metric Prefixes

In engineering notation **metric prefixes** represent each of the most commonly used powers of ten. These metric prefixes are listed in Table 3 with their symbols and corresponding powers of ten.

▶ TABLE 3

Metric prefixes with their symbols and corresponding powers of ten and values.

METRIC PREFIX	SYMBOL	POWER OF TEN	VALUE
femto	f	10^{-15}	one-quadrillionth
pico	p	10^{-12}	one-trillionth
nano	n	10^{-9}	one-billionth
micro	μ	10^{-6}	one-millionth
milli	m	10^{-3}	one-thousandth
kilo	k	10^{3}	one thousand
mega	M	10^{6}	one million
giga	G	10^{9}	one billion
tera	T	10^{12}	one trillion

Metric prefixes are used only with numbers that have a unit of measure, such as volts, amperes, and ohms, and precede the unit symbol. For example, 0.025 amperes can be expressed in engineering notation as 25×10^{-3} A. This quantity expressed using a metric prefix is 25 mA, which is read 25 milliamps. The metric prefix *milli* has replaced 10^{-3}. As another example, 10,000,000 ohms can be expressed as $10 \times 10^{6}\ \Omega$. This quantity expressed using a metric prefix is 10 MΩ, which is read 10 megohms. The metric prefix *mega* has replaced 10^{6}.

www.EngineeringBooksPdf.com

EXAMPLE 12

Express each quantity using a metric prefix:

(a) 50,000 V **(b)** 25,000,000 Ω **(c)** 0.000036 A

Solution

(a) $50{,}000\ \text{V} = 50 \times 10^3\ \text{V} = \mathbf{50\ kV}$ **(b)** $25{,}000{,}000\ \Omega = 25 \times 10^6\ \Omega = \mathbf{25\ M\Omega}$

(c) $0.000036\ \text{A} = 36 \times 10^{-6}\ \text{A} = \mathbf{36\ \mu A}$

Related Problem

Express each quantity using metric prefixes:

(a) 56,000,000 Ω **(b)** 0.000470 A

SECTION 2 CHECKUP

1. List the metric prefix for each of the following powers of ten: 10^6, 10^3, 10^{-3}, 10^{-6}, 10^{-9}, and 10^{-12}.
2. Use a metric prefix to express 0.000001 A.
3. Use a metric prefix to express 250,000 W.

3 METRIC UNIT CONVERSIONS

It is sometimes necessary or convenient to convert a quantity from one unit with a metric prefix to another, such as from milliamperes (mA) to microamperes (μA). Moving the decimal point in the number an appropriate number of places to the left or to the right, depending on the particular conversion, results in a metric unit conversion.

After completing this section, you should be able to

- **Convert from one unit with a metric prefix to another**
  - Convert between milli, micro, nano, and pico
  - Convert between kilo and mega

The following basic rules apply to metric unit conversions:

1. When converting from a larger unit to a smaller unit, move the decimal point to the right.
2. When converting from a smaller unit to a larger unit, move the decimal point to the left.
3. Determine the number of places to move the decimal point by finding the difference in the powers of ten of the units being converted.

For example, when converting from milliamperes (mA) to microamperes (μA), move the decimal point three places to the right because there is a three-place difference between the two units (mA is 10^{-3} A and μA is 10^{-6} A). The following examples illustrate a few conversions.

EXAMPLE 13

Convert 0.15 milliampere (0.15 mA) to microamperes (μA).

Solution

Move the decimal point three places to the right.

$$0.15\ \text{mA} = 0.15 \times 10^{-3}\ \text{A} = 150 \times 10^{-6}\ \text{A} = \mathbf{150\ \mu A}$$

Related Problem

Convert 1 mA to microamperes.

www.EngineeringBooksPdf.com

EXAMPLE 14 Convert 4500 microvolts (4500 μV) to millivolts (mV).

Solution Move the decimal point three places to the left.

$$4500\,\mu\text{V} = 4500 \times 10^{-6}\,\text{V} = 4.5 \times 10^{-3}\,\text{V} = \mathbf{4.5\,mV}$$

Related Problem Convert 1000 μV to millivolts.

EXAMPLE 15 Convert 5000 nanoamperes (5000 nA) to microamperes (μA).

Solution Move the decimal point three places to the left.

$$5000\,\text{nA} = 5000 \times 10^{-9}\,\text{A} = 5 \times 10^{-6}\,\text{A} = \mathbf{5\,\mu A}$$

Related Problem Convert 893 nA to microamperes.

EXAMPLE 16 Convert 47,000 picofarads (47,000 pF) to microfarads (μF).

Solution Move the decimal point six places to the left.

$$47{,}000\,\text{pF} = 47{,}000 \times 10^{-12}\,\text{F} = 0.047 \times 10^{-6}\,\text{F} = \mathbf{0.047\,\mu F}$$

Related Problem Convert 10,000 pF to microfarads.

EXAMPLE 17 Convert 0.00022 microfarad (0.00022 μF) to picofarads (pF).

Solution Move the decimal point six places to the right.

$$0.00022\,\mu\text{F} = 0.00022 \times 10^{-6}\,\text{F} = 220 \times 10^{-12}\,\text{F} = \mathbf{220\,pF}$$

Related Problem Convert 0.0022 μF to picofarads.

EXAMPLE 18 Convert 1800 kilohms (1800 kΩ) to megohms (MΩ).

Solution Move the decimal point three places to the left.

$$1800\,\text{k}\Omega = 1800 \times 10^{3}\,\Omega = 1.8 \times 10^{6}\,\Omega = \mathbf{1.8\,M\Omega}$$

Related Problem Convert 2.2 kΩ to megohms.

When adding (or subtracting) quantities with different metric prefixes, first convert one of the quantities to the same prefix as the other quantity.

EXAMPLE 19 Add 15 mA and 8000 μA and express the result in milliamperes.

Solution Convert 8000 μA to 8 mA and add.

$$15\,\text{mA} + 8000\,\mu\text{A} = 15\,\text{mA} + 8\,\text{mA} = \mathbf{23\,mA}$$

Related Problem Add 2873 mA and 10,000 μA.

www.EngineeringBooksPdf.com

SECTION 3 CHECKUP

1. Convert 0.01 MV to kilovolts (kV).
2. Convert 250,000 pA to milliamperes (mA).
3. Add 0.05 MW and 75 kW and express the result in kW.
4. Add 50 mV and 25,000 μV and express the result in mV.

4 MEASURED NUMBERS

Whenever a quantity is measured, there is uncertainty in the result due to limitations of the instruments used. When a measured quantity contains approximate numbers, the digits known to be correct are called significant digits. When reporting measured quantities, the number of digits that should be retained are the significant digits and no more than one uncertain digit.

After completing this section, you should be able to

- **Express measured data with the proper number of significant digits**
  - Define *accuracy, error,* and *precision*
  - Round numbers properly

Error, Accuracy, and Precision

Data taken in experiments are not perfect because the accuracy of the data depends on the accuracy of the test equipment and the conditions under which the measurement was made. In order to properly report measured data, the error associated with the measurement should be taken into account. Experimental error should not be thought of as a mistake. All measurements that do not involve counting are approximations of the true value. The difference between the true or best-accepted value of some quantity and the measured value is the **error**. A measurement is said to be accurate if the error is small. **Accuracy** is an indication of the range of error in a measurement. For example, if you measure thickness of a 10.00 mm gauge block with a micrometer and find that it is 10.8 mm, the reading is not accurate because a gauge block is considered to be a working standard. If you measure 10.02 mm, the reading is accurate because it is in reasonable agreement with the standard.

Another term associated with the quality of a measurement is *precision.* **Precision** is a measure of the repeatability (or consistency) of a measurement of some quantity. It is possible to have a precise measurement in which a series of readings are not scattered, but each measurement is inaccurate because of an instrument error. For example, a meter may be out of calibration and produce inaccurate but consistent (precise) results. However, it is not possible to have an accurate instrument unless it is also precise.

Significant Digits

The digits in a measured number that are known to be correct are called **significant digits**. Most measuring instruments show the proper number of significant digits, but some instruments can show digits that are not significant, leaving it to the user to determine what should be reported. This may occur because of an effect called *loading*. A meter can change the actual reading in a circuit by its very presence. It is important to recognize when a reading may be inaccurate; you should not report digits that are known to be inaccurate.

Another problem with significant digits occurs when you perform mathematical operations with numbers. The number of significant digits should never exceed the number in the

www.EngineeringBooksPdf.com

original measurement. For example, if 1.0 V is divided by 3.0 Ω, a calculator will show 0.33333333. Since the original numbers each contain 2 significant digits, the answer should be reported as 0.33 A, the same number of significant digits.

The rules for determining if a reported digit is significant are

1. Nonzero digits are always considered to be significant.
2. Zeros to the left of the first nonzero digit are never significant.
3. Zeros between nonzero digits are always significant.
4. Zeros to the right of the decimal point for a decimal number are significant.
5. Zeros to the left of the decimal point with a whole number may or may not be significant depending on the measurement. For example, the number 12,100 Ω can have 3, 4, or 5 significant digits. To clarify the significant digits, scientific notation (or a metric prefix) should be used. For example, 12.10 kΩ has 4 significant digits.

When a measured value is reported, one uncertain digit may be retained but other uncertain digits should be discarded. To find the number of significant digits in a number, ignore the decimal point, and count the number of digits from left to right starting with the first nonzero digit and ending with the last digit to the right. All of the digits counted are significant except zeros to the right end of the number, which may or may not be significant. In the absence of other information, the significance of the right-hand zeros is uncertain. Generally, zeros that are placeholders, and not part of a measurement, are considered to be not significant. To avoid confusion, numbers should be shown using scientific or engineering notation if it is necessary to show the significant zeros.

EXAMPLE 20

Express the measured number 4300 with 2, 3, and 4 significant digits.

Solution

Zeros to the right of the decimal point in a decimal number are significant. Therefore, to show two significant digits, write

$$\mathbf{4.3 \times 10^3}$$

To show three significant digits, write

$$\mathbf{4.30 \times 10^3}$$

To show four significant digits, write

$$\mathbf{4.300 \times 10^3}$$

Related Problem

How would you show the number 10,000 showing three significant digits?

EXAMPLE 21

Underline the significant digits in each of the following measurements:

(a) 40.0 **(b)** 0.3040 **(c)** 1.20×10^5 **(d)** 120,000 **(e)** 0.00502

Solution

(a) 40.0 has three significant digits; see rule 4.

(b) 0.3040 has four significant digits; see rules 2 and 3.

(c) 1.20×10^5 has three significant digits; see rule 4.

(d) 120,000 has at least two significant digits. Although the number has the same value as in (c), zeros in this example are uncertain; see rule 5. This is *not* a recommended

www.EngineeringBooksPdf.com

method for reporting a measured quantity; use scientific notation or a metric prefix in this case. See Example 20.

(e) 0.00502 has three significant digits; see rules 2 and 3.

Related Problem What is the difference between a measured quantity of 10 and 10.0?

Rounding Off Numbers

Since they always contain approximate numbers, measurements should be shown only with those digits that are significant plus no more than one uncertain digit. The number of digits shown is indicative of the precision of the measurement. For this reason, you should **round off** a number by dropping one or more digits to the right of the last significant digit. Use only the most significant dropped digit to decide how to round off. The rules for rounding off are

1. If the most significant digit dropped is greater than 5, increase the last retained digit by 1.
2. If the digit dropped is less than 5, do not change the last retained digit.
3. If the digit dropped is 5, increase the last retained digit *if* it makes it an even number, otherwise do not. This is called the "round-to-even" rule.

EXAMPLE 22

Round each of the following numbers to three significant digits:

(a) 10.071 **(b)** 29.961 **(c)** 6.3948 **(d)** 123.52 **(e)** 122.52

Solution

(a) 10.071 rounds to **10.1**. **(b)** 29.961 rounds to **30.0**.

(c) 6.3948 rounds to **6.39**. **(d)** 123.52 rounds to **124**.

(e) 122.52 rounds to **122**.

Related Problem Round 3.2850 to three significant digits using the round-to-even rule.

In most electrical and electronics work, components have tolerances greater than 1% (5% and 10% are common). Most measuring instruments have accuracy specifications better than this, but it is unusual for measurements to be made with higher accuracy than 1 part in 1000. For this reason, three significant digits are appropriate for numbers that represent measured quantities in all but the most exacting work. If you are working with a problem with several intermediate results, keep all digits in your calculator, but round the answers to three when reporting a result.

SECTION 4 CHECKUP

1. What is the rule for showing zeros to the right of the decimal point?
2. What is the round-to-even rule?
3. On schematics, you will frequently see a 1000 Ω resistor listed as 1.0 kΩ. What does this imply about the value of the resistor?
4. If a power supply is required to be set to 10.00 V, what does this imply about the accuracy needed for the measuring instrument?
5. How can scientific or engineering notation be used to show the correct number of significant digits in a measurement?

www.EngineeringBooksPdf.com

5 ELECTRICAL SAFETY

Safety is a major concern when working with electricity. The possibility of an electric shock or a burn is always present, so caution should always be used. You provide a current path when voltage is applied across two points on your body, and current produces electrical shock. Electrical components often operate at high temperatures, so you can sustain skin burns when you come in contact with them. Also, the presence of electricity creates a potential fire hazard.

After completing this section, you should be able to

- **Recognize electrical hazards and practice proper safety procedures**
  - Describe the cause of electrical shock
  - List the groups of current paths through the body
  - Discuss the effects of current on the human body
  - List the safety precautions that you should observe when you work with electricity

Electrical Shock

Current through your body, not the voltage, is the cause of **electrical shock**. Of course, it takes voltage across a resistance to produce current. When a point on your body comes in contact with a voltage and another point comes in contact with a different voltage or with ground, such as a metal chassis, there will be current through your body from one point to the other. The path of the current depends on the points across which the voltage occurs. The severity of the resulting electrical shock depends on the amount of voltage and the path that the current takes through your body.

The current path through the body determines which tissues and organs will be affected. The current paths can be placed into three groups which are referred to as *touch potential, step potential,* and *touch/step potential.* These are illustrated in Figure 1.

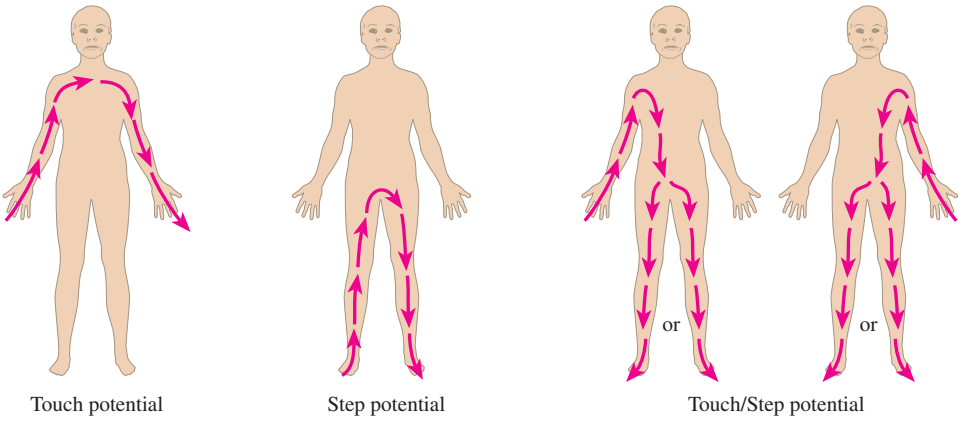

▶ FIGURE 1
Shock hazard in terms of three basic current path groups.

Effects of Current on the Human Body The amount of current is dependent on voltage and resistance. The human body has resistance that depends on many factors, which include body mass, skin moisture, and points of contact of the body with a voltage potential. Table 4 shows the effects for various values of current in milliamperes.

www.EngineeringBooksPdf.com

CURRENT (mA)	PHYSICAL EFFECT
0.4	Slight sensation
1.1	Perception threshold
1.8	Shock, no pain, no loss of muscular control
9	Painful shock, no loss of muscular control
16	Painful shock, let-go threshold
23	Severe painful shock, muscular contractions, breathing difficulty
75	Ventricular fibrillation, threshold
235	Ventricular fibrillation, usually fatal for duration of 5 seconds or more
4,000	Heart paralysis (no ventricular fibrillation)
5,000	Tissue burn

◀ TABLE 4

Physical effects of electrical current. Values vary depending on body mass.

Body Resistance Resistance of the human body is typically between 10 kΩ and 50 kΩ and depends on the two points between which it is measured. The moisture of the skin also affects the resistance between two points. The resistance determines the amount of voltage required to produce each of the effects listed in Table 4. For example, if you have a resistance of 10 kΩ between two given points on your body, 90 V across those two points will produce enough current (9 mA) to cause painful shock.

Utility Voltages

We tend to take utility voltages for granted, but they can be and have been lethal. It is best to be careful around any source of voltage (even low voltages can present a serious burn hazard). As a general rule, you should avoid working on any energized circuit, and check that the power is off with a known good meter. Most work in educational labs uses low voltages, but you should still avoid touching any energized circuit. If you are working on a circuit that is connected to utility voltages, the service should be disconnected, a notice should be placed on the equipment or place where the service is disconnected, and a padlock should be used to prevent someone from accidentally turning on the power. This procedure is called *lockout/tagout* and is widely used in industry. There are specific OSHA and industry standards for lockout/tagout.

Most laboratory equipment is connected to the utility line ("ac") and in North America, this is 120 V rms. A faulty piece of equipment can cause the "hot" lead to inadvertently become exposed. You should inspect cords for exposed wires and check equipment for missing covers or other potential safety problems. The single-phase utility lines in homes and electrical laboratories use three insulated wires that are referred to as the "hot" (black or red wire), neutral (white wire), and safety ground (green wire). The hot and neutral wires will have current, but the green safety line should never have current in normal operation. The safety wire is connected to the metal exterior of encased equipment and is also connected to conduit and the metal boxes for housing receptacles. Figure 2 shows the location of these conductors on a standard receptacle. Notice on the receptacle that the neutral lead is larger than the hot lead.

The safety ground should be connected to the neutral at the service panel. The metal chassis of an instrument or appliance is also connected to ground. In the event that the hot wire is accidentally in contact with ground, the resulting high current should trip the circuit breaker or open a fuse to remove the hazard. However, a broken or missing ground lead may not have high current until it is contacted by a person. This danger is one obvious reason for ensuring that line cords have not been altered by removing the ground pin.

Many circuits are further protected with a special device called a ground-fault circuit interrupter (GFCI, which is sometimes called just GFI). If a fault occurs in a GFCI circuit, a sensor detects that the current in the hot line and the neutral line are not equal as they

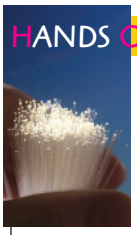

HANDS ON TIP

Receptacle testers are designed for use with specific receptacle types including specialized outlets. They can pinpoint problems such as open lines, faulty wiring, or reversed polarity; they show results with a lighted LED or neon bulb. Some testers are designed to test ground fault circuit interrupters (GFCI) for proper operation.

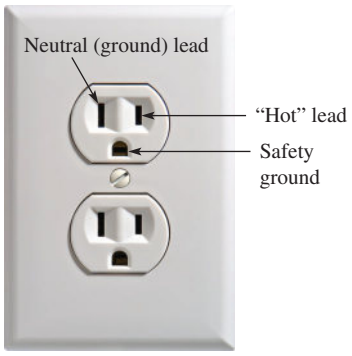

olivier/Shutterstock

▲ FIGURE 2

Standard receptacle and connections.

www.EngineeringBooksPdf.com

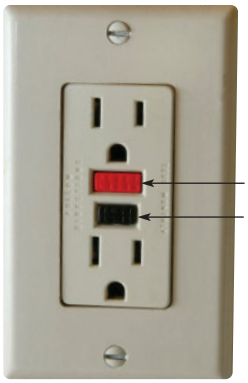

© Ted Foxx/Alamy

▲ FIGURE 3

GFCI receptacle.

should be and trips the circuit breaker. The GFCI breaker is very fast acting and can trip faster than the breaker on the main panel. GFCI breakers are required in areas where a shock hazard exists such as wherever there is water or moisture. Pools, bathrooms, kitchens, basements, and garages should all have GFCI outlets. Figure 3 shows a ground-fault receptacle with reset and test buttons. When the test button is pressed, the circuit should immediately open. The reset button restores power.

Safety Precautions

There are many practical things that you should do when you work with electrical and electronic equipment. Some important precautions are listed here.

- Avoid contact with any voltage source. Turn power off before you work on circuits when you need to touch circuit parts.
- Do not work alone. A telephone should be available for emergencies.
- Do not work when tired or taking medications that make you drowsy.
- Remove rings, watches, and other metallic jewelry when you work on circuits.
- Do not work on equipment until you know proper procedures and are aware of potential hazards.
- Make sure power cords are in good condition and grounding pins are not missing or bent.
- Keep your tools properly maintained. Make sure the insulation on metal tool handles is in good condition.
- Handle tools properly and maintain a neat work area.
- Wear safety glasses when appropriate, particularly when soldering and clipping wires.
- Always shut off power and discharge capacitors before you touch any part of a circuit with your hands.
- Know the location of the emergency power-off switch and emergency exits.
- Never try to override or tamper with safety devices such as an interlock switch or ground pin on a three-prong plug.
- Always wear shoes and keep them dry. Do not stand on metal or wet floors when working on electrical circuits.
- Never handle instruments when your hands are wet.
- Never assume that a circuit is off. Double-check it with a reliable meter before handling.
- Set the limiter on electronic power supplies to prevent currents larger than necessary to supply the circuit under test.
- Some devices such as capacitors can store a lethal charge for long periods after power is removed. They must be properly discharged before you work with them.
- When making circuit connections, always make the connection to the point with the highest voltage as your last step.
- Avoid contact with the terminals of power supplies.
- Always use wires with insulation and connectors or clips with insulating shrouds.
- Keep cables and wires as short as possible. Connect polarized components properly.
- Report any unsafe condition.
- Be aware of and follow all workplace and laboratory rules. Do not have drinks or food near equipment.
- If another person cannot let go of an energized conductor, switch the power off immediately. If that is not possible, use any available nonconductive material to try to separate the body from the contact.
- Use a lockout/tagout procedure to avoid someone turning power on while you are working on a circuit.

SAFETY NOTE

A GFCI outlet does not prevent shock or injury in all cases. If you are touching the hot and neutral wires without being grounded, no ground fault is detected and the GFCI breaker will not trip. In another case, the GFCI may prevent electrocution but not the initial electric shock before it interrupts the circuit. The initial shock could cause a secondary injury, such as from a fall.

www.EngineeringBooksPdf.com

SECTION 5 CHECKUP

1. What causes physical pain and/or damage to the body when electrical contact is made?
2. It's OK to wear a ring when working on an electrical circuit. (T or F)
3. Standing on a wet floor presents no safety hazard when working with electricity. (T or F)
4. A circuit can be rewired without removing the power if you are careful. (T or F)
5. Electrical shock can be extremely painful or even fatal. (T or F)
6. What does *GFCI* stand for?

SUMMARY

- Scientific notation is a method for expressing very large and very small numbers as a number between one and ten (one digit to left of decimal point) times a power of ten.
- Engineering notation is a form of scientific notation in which quantities are expressed with one, two, or three digits to the left of the decimal point times a power of ten that is a multiple of three.
- Metric prefixes are symbols used to represent powers of ten that are multiples of three.
- The uncertainty of a measured quantity depends on the accuracy and precision of the measurement.
- The number of significant digits in the result of a mathematical operation should never exceed the significant digits in the original numbers.
- Standard connections to electrical plugs include a hot wire, a neutral, and a safety ground.
- GFCI breakers sense the current in the hot wire and in the neutral wire and trip the breaker if they are different, indicating a ground fault.

KEY TERMS

Accuracy An indication of the range of error in a measurement.

Electrical shock The physical sensation resulting from current through the body.

Engineering notation A system for representing any number as a one-, two-, or three-digit number times a power of ten with an exponent that is a multiple of 3.

Error The difference between the true or best-accepted value of some quantity and the measured value.

Exponent The number to which a base number is raised.

Metric prefix A symbol that is used to replace the power of ten in numbers expressed in engineering notation.

Power of ten A numerical representation consisting of a base of 10 and an exponent; the number 10 raised to a power.

Precision A measure of the repeatability (or consistency) of a series of measurements.

Round off The process of dropping one or more digits to the right of the last significant digit in a number.

Scientific notation A system for representing any number as a number between 1 and 10 times an appropriate power of ten.

SI Standardized international system of units used for all engineering and scientific work; abbreviation for French *Le Systeme International d'Unites.*

Significant digit A digit known to be correct in a number.

TRUE/FALSE QUIZ

Answers are at the end of the chapter.

1. The number 3300 is written as 3.3×10^3 in both scientific and engineering notation.
2. A negative number that is expressed in scientific notation will always have a negative exponent.
3. When you multiply two numbers written in scientific notation, the exponents need to be the same.

www.EngineeringBooksPdf.com

4. When you divide two numbers written in scientific notation, the exponent of the denominator is subtracted from the exponent of the numerator.
5. The metric prefix *micro* has an equivalent power of ten equal to 10^6.
6. To express 56×10^6 with a metric prefix, the result is 56 M.
7. 0.047 μF is equal to 47 nF.
8. The number of significant digits in the number 0.0102 is three.
9. When you apply the *round-to-even* rule to round off 26.25 to three digits, the result is 26.3.
10. The white neutral lead for ac power should have the same current as the hot lead.

SELF-TEST

Answers are at the end of the chapter.

1. The quantity 4.7×10^3 is the same as
   (a) 470 **(b)** 4700 **(c)** 47,000 **(d)** 0.0047
2. The quantity 56×10^{-3} is the same as
   (a) 0.056 **(b)** 0.560 **(c)** 560 **(d)** 56,000
3. The number 3,300,000 can be expressed in engineering notation as
   (a) 3300×10^3 **(b)** 3.3×10^{-6} **(c)** 3.3×10^6 **(d)** either (a) or (c)
4. Ten milliamperes can be expressed as
   (a) 10 MA **(b)** 10 μA **(c)** 10 kA **(d)** 10 mA
5. Five thousand volts can be expressed as
   (a) 5000 V **(b)** 5 MV **(c)** 5 kV **(d)** either (a) or (c)
6. Twenty million ohms can be expressed as
   (a) 20 mΩ **(b)** 20 MW **(c)** 20 MΩ **(d)** 20 $\mu\Omega$
7. 15,000 W is the same as
   (a) 15 mW **(b)** 15 kW **(c)** 15 MW **(d)** 15 μW
8. Which of the following is not an electrical quantity?
   (a) current **(b)** voltage **(c)** time **(d)** power
9. The unit of current is
   (a) volt **(b)** watt **(c)** ampere **(d)** joule
10. The unit of voltage is
   (a) ohm **(b)** watt **(c)** volt **(d)** farad
11. The unit of resistance is
   (a) ampere **(b)** henry **(c)** hertz **(d)** ohm
12. Hertz is the unit of
   (a) power **(b)** inductance **(c)** frequency **(d)** time
13. The number of significant digits in the number 0.1050 is
   (a) two **(b)** three **(c)** four **(d)** five

PROBLEMS

Answers to odd-numbered problems are at the end of the chapter.

BASIC PROBLEMS

SECTION 1 Scientific and Engineering Notation

1. Express each of the following numbers in scientific notation:
   (a) 3000 **(b)** 75,000 **(c)** 2,000,000
2. Express each fractional number in scientific notation:
   (a) 1/500 **(b)** 1/2000 **(c)** 1/5,000,000
3. Express each of the following numbers in scientific notation:
   (a) 8400 **(b)** 99,000 **(c)** 0.2×10^6

www.EngineeringBooksPdf.com

4. Express each of the following numbers in scientific notation:
(a) 0.0002 **(b)** 0.6 **(c)** 7.8×10^{-2}

5. Express each of the following as a regular decimal number:
(a) 2.5×10^{-6} **(b)** 5.0×10^{2} **(c)** 3.9×10^{-1}

6. Express each number in regular decimal form:
(a) 4.5×10^{-6} **(b)** 8×10^{-9} **(c)** 4.0×10^{-12}

7. Add the following numbers:
(a) $(9.2 \times 10^{6}) + (3.4 \times 10^{7})$ **(b)** $(5 \times 10^{3}) + (8.5 \times 10^{-1})$
(c) $(5.6 \times 10^{-8}) + (4.6 \times 10^{-9})$

8. Perform the following subtractions:
(a) $(3.2 \times 10^{12}) - (1.1 \times 10^{12})$ **(b)** $(2.6 \times 10^{8}) - (1.3 \times 10^{7})$
(c) $(1.5 \times 10^{-12}) - (8 \times 10^{-13})$

9. Perform the following multiplications:
(a) $(5 \times 10^{3})(4 \times 10^{5})$ **(b)** $(1.2 \times 10^{12})(3 \times 10^{2})$ **(c)** $(2.2 \times 10^{-9})(7 \times 10^{-6})$

10. Divide the following:
(a) $(1.0 \times 10^{3}) \div (2.5 \times 10^{2})$ **(b)** $(2.5 \times 10^{-6}) \div (5.0 \times 10^{-8})$
(c) $(4.2 \times 10^{8}) \div (2 \times 10^{-5})$

11. Express each number in engineering notation:
(a) 89,000 **(b)** 450,000 **(c)** 12,040,000,000,000

12. Express each number in engineering notation:
(a) 2.35×10^{5} **(b)** 7.32×10^{7} **(c)** 1.333×10^{9}

13. Express each number in engineering notation:
(a) 0.000345 **(b)** 0.025 **(c)** 0.00000000129

14. Express each number in engineering notation:
(a) 9.81×10^{-3} **(b)** 4.82×10^{-4} **(c)** 4.38×10^{-7}

15. Add the following numbers and express each result in engineering notation:
(a) $2.5 \times 10^{-3} + 4.6 \times 10^{-3}$ **(b)** $68 \times 10^{6} + 33 \times 10^{6}$
(c) $1.25 \times 10^{6} + 250 \times 10^{3}$

16. Multiply the following numbers and express each result in engineering notation:
(a) $(32 \times 10^{-3})(56 \times 10^{3})$ **(b)** $(1.2 \times 10^{-6})(1.2 \times 10^{-6})$ **(c)** $100(55 \times 10^{-3})$

17. Divide the following numbers and express each result in engineering notation:
(a) $50 \div (2.2 \times 10^{3})$ **(b)** $(5 \times 10^{3}) \div (25 \times 10^{-6})$
(c) $(560 \times 10^{3}) \div (660 \times 10^{3})$

SECTION 2 Units and Metric Prefixes

18. Express each number in Problem 11 in ohms using a metric prefix.

19. Express each number in Problem 13 in amperes using a metric prefix.

20. Express each of the following as a quantity having a metric prefix:
(a) 31×10^{-3} A **(b)** 5.5×10^{3} V **(c)** 20×10^{-12} F

21. Express the following using metric prefixes:
(a) 3×10^{-6} F **(b)** $3.3 \times 10^{6}\ \Omega$ **(c)** 350×10^{-9}A

22. Express each quantity with a power of ten:
(a) 5 μA **(b)** 43 mV **(c)** 275 kΩ **(d)** 10 MW

SECTION 3 Metric Unit Conversions

23. Perform the indicated conversions:
(a) 5 mA to microamperes **(b)** 3200 μW to milliwatts
(c) 5000 kV to megavolts **(d)** 10 MW to kilowatts

www.EngineeringBooksPdf.com

24. Determine the following:

(a) The number of microamperes in 1 milliampere

(b) The number of millivolts in 0.05 kilovolt

(c) The number of megohms in 0.02 kilohm

(d) The number of kilowatts in 155 milliwatts

25. Add the following quantities:

(a) 50 mA + 680 μA **(b)** 120 kΩ + 2.2 MΩ **(c)** 0.02 μF + 3300 pF

26. Do the following operations:

(a) 10 kΩ ÷ (2.2 kΩ + 10 kΩ) **(b)** 250 mV ÷ 50 μV **(c)** 1 MW ÷ 2 kW

SECTION 4 Measured Numbers

27. How many significant digits are in each of the following numbers:

(a) 1.00×10^3 **(b)** 0.0057 **(c)** 1502.0

(d) 0.000036 **(e)** 0.105 **(f)** 2.6×10^2

28. Round each of the following numbers to three significant digits. Use the "round-to-even" rule.

(a) 50,505 **(b)** 220.45 **(c)** 4646 **(d)** 10.99 **(e)** 1.005

ANSWERS

SECTION CHECKUPS

SECTION 1 Scientific and Engineering Notation

1. True

2. 10^2

3. **(a)** 4.35×10^3 **(b)** 1.201×10^4 **(c)** 2.9×10^7

4. **(a)** 7.6×10^{-1} **(b)** 2.5×10^{-4} **(c)** 5.97×10^{-7}

5. **(a)** 3×10^5 **(b)** 6×10^{10} **(c)** 2×10^1 **(d)** 2.37×10^{-6}

6. Enter the digits, press EE, and enter the power of ten.

7. **(a)** 5.6×10^{-3} **(b)** 28.3×10^{-9} **(c)** 950×10^3 **(d)** 375×10^9

8. Enter the digits, press EE, and enter the power of ten.

SECTION 2 Units and Metric Prefixes

1. Mega (M), kilo (k), milli (m), micro (μ), nano (n), and pico (p)

2. 1 mA (one microampere)

3. 250 kW (250 kilowatts)

SECTION 3 Metric Unit Conversions

1. 0.01 MV = 10 kV

2. 250,000 pA = 0.00025 mA

3. 125 kW

4. 75 mV

SECTION 4 Measured Numbers

1. Zeros should be retained only if they are significant because if they are shown, they are considered significant.

2. If the digit dropped is 5, increase the last retained digit *if* it makes it even, otherwise do not.

3. A zero to the right of the decimal point implies that the resistor is accurate to the nearest 100 Ω (0.1 kΩ).

www.EngineeringBooksPdf.com

4. The instrument must be accurate to four significant digits.
5. Scientific and engineering notation can show any number of digits to the right of a decimal. Numbers to the right of the decimal are always considered significant.

SECTION 5 Electrical Safety

1. Current
2. F
3. F
4. F
5. T
6. Ground-fault circuit interrupter

RELATED PROBLEMS FOR EXAMPLES

1 7.5×10^8
2 9.3×10^{-7}
3 820,000,000
4 4.89×10^3
5 1.85×10^{-5}
6 4.8×10^5
7 4×10^4
8 Enter 5.73946; press EE, enter 5.
9 36×10^9
10 5.6×10^{-12}
11 Enter 273.9, press EE, enter 3.
12 **(a)** 56 MΩ **(b)** 470 μA
13 1000 μA
14 1 mV
15 0.893 μA
16 0.01 μF
17 2200 pF
18 0.0022 MΩ
19 2883 mA
20 10.0×10^3
21 The number 10 has two significant digits; the number 10.0 has three.
22 3.28

TRUE/FALSE QUIZ

1. T **2.** F **3.** F **4.** T **5.** F **6.** T **7.** T **8.** T **9.** F **10.** T

SELF-TEST

1. (b) **2.** (a) **3.** (c) **4.** (d) **5.** (d) **6.** (c) **7.** (b)
8. (c) **9.** (c) **10.** (c) **11.** (d) **12.** (c) **13.** (c)

PROBLEMS – ODD-NUMBERED ANSWERS

1. **(a)** 3×10^3 **(b)** 7.5×10^4 **(c)** 2×10^6
3. **(a)** 8.4×10^3 **(b)** 9.9×10^4 **(c)** 2×10^5
5. **(a)** 0.0000025 **(b)** 500 **(c)** 0.39
7. **(a)** 4.32×10^7 **(b)** 5.00085×10^3 **(c)** 6.06×10^{-8}

www.EngineeringBooksPdf.com

9.	**(a)** 2.0×10^{9}	**(b)** 3.6×10^{14}	**(c)** 1.54×10^{-14}		
11.	**(a)** 89×10^{3}	**(b)** 450×10^{3}	**(c)** 12.04×10^{12}		
13.	**(a)** 345×10^{-6}	**(b)** 25×10^{-3}	**(c)** 1.29×10^{-9}		
15.	**(a)** 7.1×10^{-3}	**(b)** 101×10^{6}	**(c)** 1.50×10^{6}		
17.	**(a)** 22.7×10^{-3}	**(b)** 200×10^{6}	**(c)** 848×10^{-3}		
19.	**(a)** 345 μA	**(b)** 25 mA	**(c)** 1.29 nA		
21.	**(a)** 3 μF	**(b)** 3.3 MΩ	**(c)** 350 nA		
23.	**(a)** 5000 μA	**(b)** 3.2 mW	**(c)** 5 MV	**(d)** 10,000 kW	
25.	**(a)** 50.68 mA	**(b)** 2.32 MΩ	**(c)** 0.0233 μF		
27.	**(a)** 3	**(b)** 4	**(c)** 5	**(d)** 6	**(e)** 3 **(f)** 2

PHOTO CREDITS FOR REOCCURRING IMAGES

CD Icon: Stockbyte/Getty Images; **Computer Chips:** Photodisc/Thinkstock; **Computer:** Jeff Maloney/Photodisc/Getty Images; **Fiber Optic:** discpicture/Shutterstock.

www.EngineeringBooksPdf.com

Voltage, Current, and Resistance

From Chapter 2 of *Electronics Fundamentals: Circuits, Devices, and Applications*, Eighth Edition, Thomas L. Floyd, David M. Buchla.
Copyright © 2010 by Pearson Education, Inc. Published by Pearson Prentice Hall. All rights reserved.

www.EngineeringBooksPdf.com

Voltage, Current, and Resistance

CHAPTER OUTLINE

1 Atoms
2 Electrical Charge
3 Voltage
4 Current
5 Resistance
6 The Electric Circuit
7 Basic Circuit Measurements
Application Assignment: Putting Your Knowledge to Work

CHAPTER OBJECTIVES

- Describe the basic structure of an atom
- Explain the concept of electrical charge
- Define *voltage* and discuss its characteristics
- Define *current* and discuss its characteristics
- Define *resistance* and discuss its characteristics
- Describe a basic electric circuit
- Make basic circuit measurements

KEY TERMS

- Atom
- Electron
- Free electron
- Conductor
- Semiconductor
- Insulator
- Charge
- Coulomb's law
- Coulomb (C)
- Voltage
- Volt (V)
- Voltage source
- Fuel cell
- Current
- Ampere (A)
- Current source
- Resistance
- Ohm (Ω)
- Conductance
- Siemens (S)
- Resistor
- Potentiometer
- Rheostat
- Circuit
- Load
- Schematic
- Closed circuit
- Open circuit
- Switch
- Fuse
- Circuit breaker
- AWG
- Ground
- Voltmeter
- Ammeter
- Ohmmeter
- DMM

APPLICATION ASSIGNMENT PREVIEW

Assume you wanted to have an interactive quiz board as part of a science fair display. The quiz board will use a rotary switch to select one of four options that represent battery types. Each position of the switch lights a light. The person viewing the display selects the matching answer by pressing a pushbutton next to one of the four possible answers. If the correct pushbutton is pressed, a "correct" light is illuminated; otherwise, nothing happens. The overall brightness of the lights is controlled by a single rheostat.

After studying this chapter, you should be able to complete the application assignment in the last section of the chapter.

VISIT THE COMPANION WEBSITE

Study aids for this chapter are available at http://www.pearsonhighered.com/floyd/

INTRODUCTION

Three basic electrical quantities presented in this chapter are voltage, current, and resistance. No matter what type of electrical or electronic equipment you may work with, these quantities will always be of primary importance. This is true for dc and ac circuits, but our focus will be dc circuits. Because of its importance in electrical applications, an ac circuit may be used occasionally to illustrate a particular concept; however, in these special cases the analysis and calculations are the same as for an equivalent lent dc circuit.

To help you understand voltage, current, and resistance, the basic structure of the atom is discussed and the concept of charge is introduced. The basic electric circuit is studied, along with techniques for measuring voltage, current, and resistance.

Streeter Photography/Alamy

www.EngineeringBooksPdf.com

1 ATOMS

All matter is made of atoms; and all atoms consist of electrons, protons, and neutrons. The configuration of certain electrons in an atom is the key factor in determining how well a conductive or semiconductive material conducts electric current.

After completing this section, you should be able to

- **Describe the basic structure of an atom**
  - Define *nucleus, proton, neutron,* and *electron*
  - Define *atomic number*
  - Define *shell*
  - Explain what a valence electron is
  - Describe ionization
  - Explain what a free electron is
  - Define *conductor, semiconductor,* and *insulator*

An **atom** is the smallest particle of an **element** that retains the characteristics of that element. Each of the known 110 elements has atoms that are different from the atoms of all other elements. This gives each element a unique atomic structure. According to the classic Bohr model, an atom is visualized as having a planetary type of structure that consists of a central nucleus surrounded by orbiting electrons, as illustrated in Figure 1. The **nucleus** consists of positively charged particles called **protons** and uncharged particles called **neutrons**. The basic particles of negative charge are called **electrons**. Electrons orbit the nucleus.

Each type of atom has a certain number of protons that distinguishes it from the atoms of all other elements. For example, the simplest atom is that of hydrogen, which has one proton and one electron, as pictured in Figure 2(a). As another example, the helium atom, shown in Figure 2(b), has two protons and two neutrons in the nucleus and two electrons orbiting the nucleus.

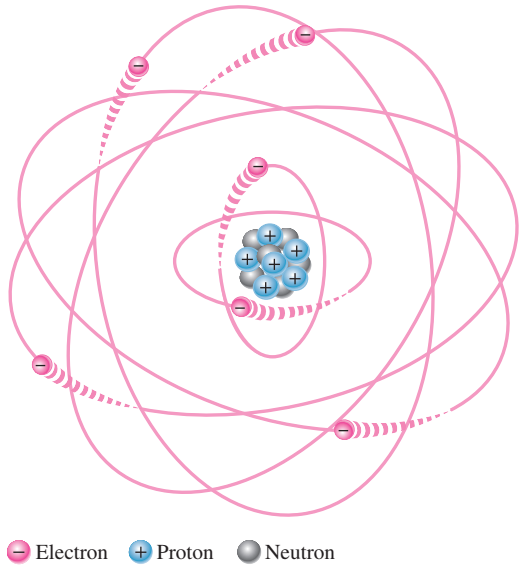

◀ FIGURE 1

The Bohr model of an atom showing electrons in circular orbits around the nucleus. The "tails" on the electrons indicate they are moving.

This icon indicates selected websites for further information on topics in this section. See the Companion Website provided with this text.

www.EngineeringBooksPdf.com

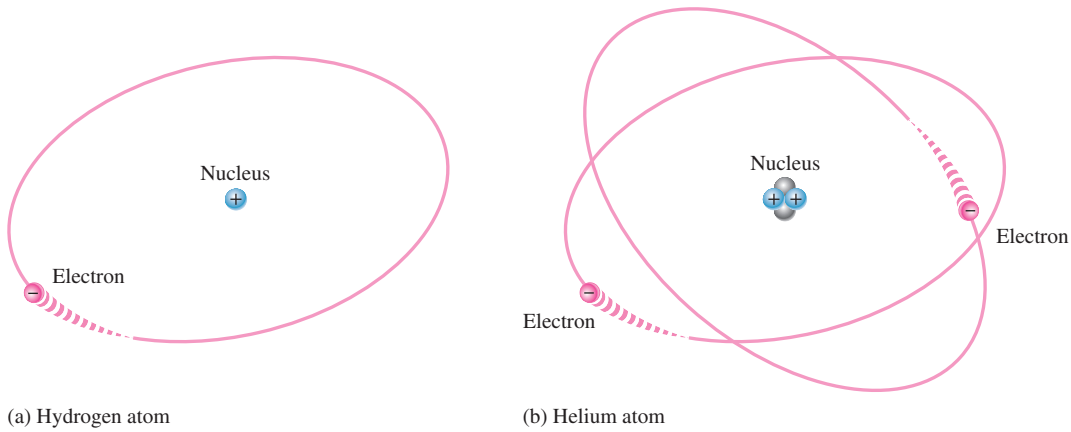

(a) Hydrogen atom (b) Helium atom

▲ FIGURE 2

The two simplest atoms, hydrogen and helium.

Atomic Number

All elements are arranged in the periodic table of the elements in order according to their **atomic number**. The atomic number equals the number of protons in the nucleus. For example, hydrogen has an atomic number of 1 and helium has an atomic number of 2. In their normal (or neutral) state, all atoms of a given element have the same number of electrons as protons; the positive charges cancel the negative charges, and the atom has a net charge of zero, making it electrically balanced.

Electron Shells and Orbits

Electrons orbit the nucleus of an atom at certain distances from the nucleus. Electrons near the nucleus have less energy than those in more distant **orbits**. It is known that only discrete (separate and distinct) values of electron energies exist within atomic structures. Therefore, electrons must orbit only at discrete distances from the nucleus.

Energy Levels Each discrete distance (orbit) from the nucleus corresponds to a certain energy level. In an atom, the orbits are grouped into energy bands known as **shells**. A given atom has a fixed number of shells. Each shell has a fixed maximum number of electrons at permissible energy levels (orbits). The shells are designated 1, 2, 3, and so on, with 1 being closest to the nucleus. This energy band concept is illustrated in Figure 3, which shows two energy levels. Additional shells may exist in other types of atoms, depending on the element.

The number of electrons in each shell follows a predictable pattern according to the formula, $2N^2$, where N is the number of the shell. The first shell of any atom ($N = 1$) can have up to two electrons, the second shell ($N = 2$) up to eight electrons, the third shell up to 18 electrons, and the fourth shell up to 32 electrons. In many elements, electrons start filling the fourth shell after eight electrons are in the third shell.

Valence Electrons

Electrons that are in orbits farther from the nucleus have higher energy and are less tightly bound to the atom than those closer to the nucleus. This is because the force of attraction between the positively charged nucleus and the negatively charged electron decreases with increasing distance from the nucleus. Electrons with the highest energy levels exist in the outermost shell of an atom and are relatively loosely bound to the atom. This outermost shell is known as the **valence** shell, and electrons in this shell are called **valence electrons**. These valence electrons contribute to chemical reactions and bonding within the structure of a material, and they determine a material's electrical properties.

www.EngineeringBooksPdf.com

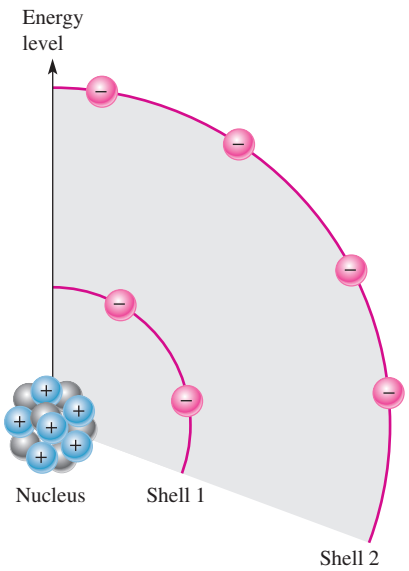

◀ FIGURE 3

Energy levels increase as the distance from the nucleus increases.

Free Electrons and Ions

If an electron absorbs a **photon** of sufficient energy, it escapes from the atom and becomes a **free electron**. Any time an atom or group of atoms is left with a net charge, it is called an **ion**. When an electron escapes from the neutral hydrogen atom (designated H), the atom is left with a net positive charge and becomes a *positive ion* (designated H^+). In other cases, an atom or group of atoms can acquire an electron, in which case it is called a *negative ion.*

The Copper Atom

Copper is the most commonly used metal in **electrical** applications. The copper atom has 29 electrons that orbit the nucleus in four shells, as shown in Figure 4. Notice that the fourth or outermost shell, the valence shell, has only one valence electron. The inner shells are called the core. When the valence electron in the outer shell of the copper atom gains sufficient thermal energy, it can break away from the parent atom and become a free electron. In a piece of copper at room temperature, a "sea" of these free electrons is present. These electrons are not bound to a given atom but are free to move in the copper material. Free electrons make copper an excellent conductor and make electrical current possible.

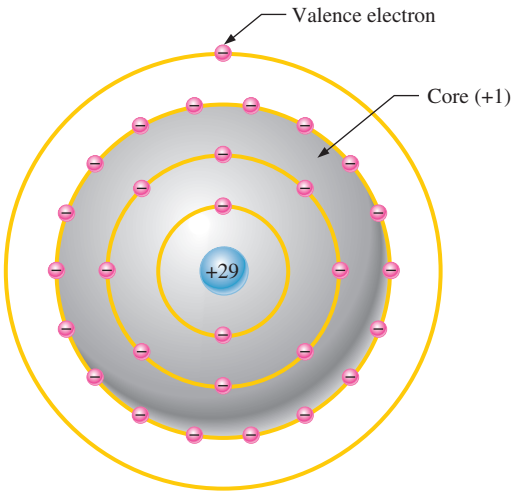

◀ FIGURE 4

The copper atom.

www.EngineeringBooksPdf.com

Categories of Materials

Three categories of materials are used in electronics: conductors, semiconductors, and insulators.

Conductors **Conductors** are materials that readily allow current. They have a large number of free electrons and are characterized by one to three valence electrons in their structure. Most metals are good conductors. Silver is the best conductor, and copper is next. Copper is the most widely used conductive material because it is less expensive than silver. Copper wire is commonly used as a conductor in electric circuits.

Semiconductors **Semiconductors** are classed below the conductors in their ability to carry current because they have fewer free electrons than do conductors. Semiconductors have four valence electrons in their atomic structures. However, because of their unique characteristics, certain semiconductor materials are the basis for **electronic** devices such as the diode, transistor, and integrated circuit. Silicon and germanium are common semiconductive materials.

Insulators **Insulators** are nonmetallic materials that are poor conductors of electric current; they are used to prevent current where it is not wanted. Insulators have no free electrons in their structure. The valence electrons are bound to the nucleus and not considered "free." Although nonmetal elements are generally considered to be insulators, most practical insulators used in electrical and electronic applications are compounds such as glass, porcelain, Teflon, and polyethylene, to name a few.

SECTION 1 CHECKUP
Answers are at the end of the chapter.

1. What is the basic particle of negative charge?
2. Define *atom.*
3. What does an atom consist of?
4. Define *atomic number.*
5. Do all elements have the same types of atoms?
6. What is a free electron?
7. What is a shell in the atomic structure?
8. Name two conductive materials.

2 ELECTRICAL CHARGE

As you know, an electron is the smallest particle that exhibits negative electrical charge. When an excess of electrons exists in a material, there is a net negative electrical charge. When a deficiency of electrons exists, there is a net positive electrical charge.

After completing this section, you should be able to

- **Explain the concept of electrical charge**
  - Name the unit of charge
  - Name the types of charge
  - Describe the forces between charges
  - Determine the amount of charge on a given number of electrons

www.EngineeringBooksPdf.com

The charge of an electron and that of a proton are equal in magnitude and opposite in sign. Electrical **charge** is an electrical property of matter that exists because of an excess or deficiency of electrons. Charge is symbolized by Q. Static electricity is the presence of a net positive or negative charge in a material. Everyone has experienced the effects of static electricity from time to time, for example, when attempting to touch a metal surface or another person or when the clothes in a dryer cling together.

Materials with charges of opposite polarity are attracted to each other; materials with charges of the same polarity are repelled, as indicated symbolically in Figure 5. A force acts between charges, as evidenced by the attraction or repulsion. This force, called an *electric field,* consists of invisible lines of force as represented in Figure 6.

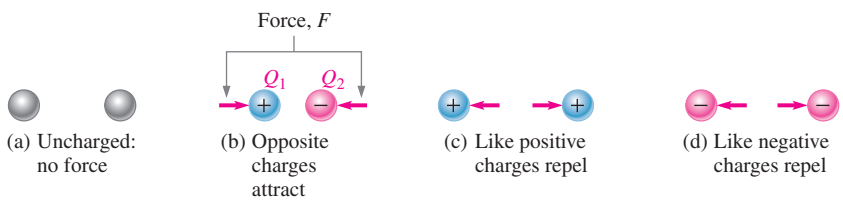

▲ FIGURE 5

Attraction and repulsion of electrical charges.

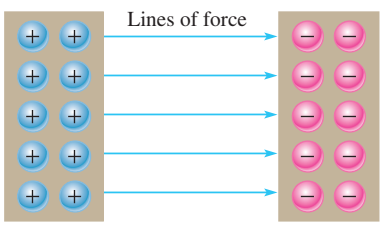

◀ FIGURE 6

Electric field between two oppositely charged surfaces.

HISTORY NOTE

Charles Augustin Coulomb 1736–1806

Coulomb, a Frenchman, spent many years as a military engineer. When bad health forced him to retire, he devoted his time to scientific research. He is best known for his work on electricity and magnetism due to his development of the inverse square law for the force between two charges. The unit of electrical charge is named in his honor. (Photo credit: Courtesy of the Smithsonian Institution. Photo number 52,597.)

Coulomb's law states

A force (F) exists between two point-source charges (Q_1, Q_2) that is directly proportional to the product of the two charges and inversely proportional to the square of the distance (d) between the charges.

Coulomb: The Unit of Charge

Electrical charge is measured in coulombs, symbolized by C.

One coulomb is the total charge possessed by 6.25×10^{18} electrons.

A single electron has a charge of 1.6×10^{-19} C. The total charge Q, expressed in coulombs, for a given number of electrons is found by the following formula:

$$Q = \frac{\text{number of electrons}}{6.25 \times 10^{18}\ \text{electrons/C}} \qquad \text{Equation 1}$$

Positive and Negative Charge

Consider a neutral atom—that is, one that has the same number of electrons and protons and thus has no net charge. As you know, when a valence electron is pulled away from the atom by the application of energy, the atom is left with a net positive charge (more protons than electrons) and becomes a positive ion. A **positive ion** is defined as an atom or group of atoms with a net positive charge. If an atom acquires an extra electron in its outer shell,

www.EngineeringBooksPdf.com

it has a net negative charge and becomes a negative ion. A **negative ion** is defined as an atom or group of atoms with a net negative charge.

The amount of energy required to free a valence electron is related to the number of electrons in the outer shell. An atom can have up to eight valence electrons. The more complete the outer shell, the more stable the atom and thus the more energy is required to remove an electron. Figure 7 illustrates the creation of a positive ion and a negative ion when a hydrogen atom gives up its single valence electron to a chlorine atom, forming gaseous hydrogen chloride (HCl). When the gaseous HCl is dissolved in water, hydrochloric acid is formed.

▶ **FIGURE 7**

Example of the formation of positive and negative ions.

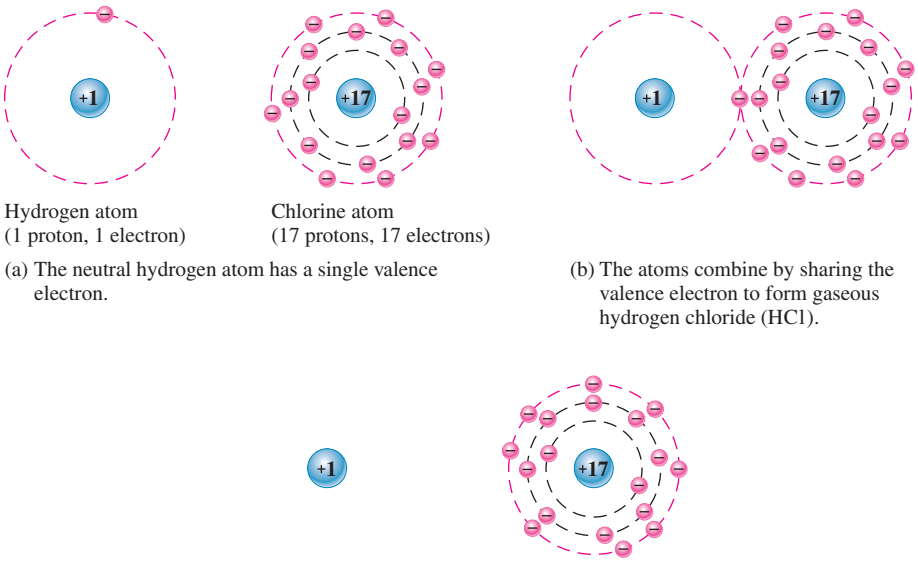

(a) The neutral hydrogen atom has a single valence electron.

(b) The atoms combine by sharing the valence electron to form gaseous hydrogen chloride (HCl).

(c) When dissolved in water, hydrogen chloride gas separates into positive hydrogen ions and negative chloride ions. The chlorine atom retains the electron given up by the hydrogen atom forming both positive and negative ions in the same solution.

EXAMPLE 1

How many coulombs of charge do 93.8×10^{16} electrons represent?

Solution

$$Q = \frac{\text{number of electrons}}{6.25 \times 10^{18}\ \text{electrons/C}} = \frac{93.8 \times 10^{16}\ \text{electrons}}{6.25 \times 10^{18}\ \text{electrons/C}} = 15 \times 10^{-2}\ \text{C} = \mathbf{0.15\ C}$$

*Related Problem** How many electrons does it take to have 3 C of charge?

*Answers are at the end of the chapter.

SECTION 2 CHECKUP

1. What is the symbol used for charge?
2. What is the unit of charge, and what is the unit symbol?
3. What are the two types of charge?
4. How much charge, in coulombs, is there in 10×10^{12} electrons?

www.EngineeringBooksPdf.com

3 VOLTAGE

As you have learned, a force of attraction exists between a positive and a negative charge. A certain amount of energy must be exerted in the form of work to overcome the force and move the charges a given distance apart. All opposite charges possess a certain potential energy because of the separation between them. The difference in potential energy of the charges is the potential difference or *voltage*. Voltage is the driving force in electric circuits and is what establishes current.

After completing this section, you should be able to

- **Define *voltage* and discuss its characteristics**
  - State the formula for voltage
  - Name and define the unit of voltage
  - Describe the basic sources of voltage

Voltage is defined as energy per unit of charge and is expressed as

$$V = \frac{W}{Q}$$ Equation 2

where V is voltage in volts (V), W is energy in joules (J), and Q is charge in coulombs (C). As a simple analogy, you can think of voltage as corresponding to the pressure difference created by a pump that causes water to flow through a pipe in a closed water system.

Volt: The Unit of Voltage

The unit of voltage is the **volt**, symbolized by V.

One volt is the potential difference (voltage) between two points when one joule of energy is used to move one coulomb of charge from one point to the other.

EXAMPLE 2 If 50 J of energy are required to move10 C of charge, what is the voltage?

Solution

$$V = \frac{W}{Q} = \frac{50\text{ J}}{10\text{ C}} = \mathbf{5\ V}$$

Related Problem How much energy is required to move 50 C from one point in a circuit to another when the voltage between the two points is 12 V?

The DC Voltage Source

A **voltage source** provides electrical energy or electromotive force (emf), more commonly known as voltage. Voltage is produced by means of chemical energy, light energy, and magnetic energy combined with mechanical motion.

The Ideal DC Voltage Source An ideal voltage source can provide a constant voltage for any current required by a circuit. The ideal voltage source does not exist but can be closely approximated in practice. We will assume ideal unless otherwise specified.

Voltage sources can be either dc or ac. A common symbol for a dc voltage source is shown in Figure 8.

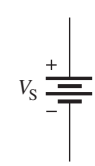

▲ FIGURE 8

Symbol for dc voltage sources.

www.EngineeringBooksPdf.com

HISTORY NOTE

Alessandro Volta 1745–1827

Volta, an Italian, invented a device to generate static electricity and he discovered methane gas. Volta investigated reactions between dissimilar metals and developed the first battery in 1800. Electrical potential, more commonly known as voltage, and the unit of voltage, the volt, are named in his honor. (Photo credit: Giovita Garavaglia, courtesy AIP Emilio Segrè Visual Archives, Landé Collection.)

A graph showing current versus voltage for an ideal dc voltage source is shown in Figure 9. As you can see, the voltage is constant for any current from the source. For a practical (nonideal) voltage source connected in a circuit, the voltage decreases slightly as the current increases as shown by the dashed line. Current is always drawn from a voltage source when a load such as a resistance is connected to it.

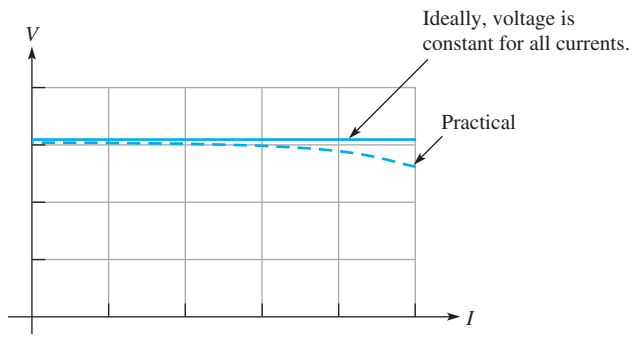

▲ **FIGURE 9**

Voltage source graph.

Types of DC Voltage Sources

Batteries A **battery** is a type of voltage source that is composed of one or more cells that convert chemical energy directly into electrical energy. As you know, work (or energy) per charge is the basic unit for voltage, and a battery adds energy to each unit of charge. It is something of a misnomer to talk about "charging a battery" because a battery does not store charge but rather stores chemical potential energy. All batteries use a specific type of chemical reaction called an *oxidation-reduction* reaction. In this type of reaction, electrons are transferred from one reactant to the other. If the chemicals used in the reaction are separated, it is possible to cause the electrons to travel in the external circuit, creating current. As long as there is an external path for the electrons, the reaction can proceed, and stored chemical energy is converted to electrical current. If the path is broken, the reaction stops and the battery is said to be in equilibrium. In a battery, the terminal that supplies electrons has a surplus of electrons and is the negative electrode or **anode**. The electrode that acquires electrons has a positive potential and is the **cathode**.

SAFETY NOTE

Lead-acid batteries can be dangerous because sulfuric acid is highly corrosive and battery gases (primarily hydrogen) are explosive. The acid in the battery can cause serious eye damage if it contacts the eye and can cause skin burns or destroy clothing. You should always wear eye protection when working on or around batteries and wash well after handling batteries.

When taking a battery out of service, disconnect the ground end first (this is the negative side on all modern cars). This prevents current and avoids a potential spark when the positive lead is disconnected.

Figure 10 shows a nonrechargeable single-cell copper-zinc battery that we will use for illustration of battery operation. The copper-zinc cell is simple to construct and illustrates concepts common to all nonrechargeable batteries. A zinc electrode and a copper electrode are immersed in solutions of zinc sulfate ($ZnSO_4$) and copper sulfate ($CuSO_4$), which are separated by a salt bridge that prevents the Cu^{2+} ions from reacting directly with the Zn metal. The zinc metal electrode supplies Zn^{2+} ions to the solution and electrons to the external circuit, so this electrode is constantly eaten away as the reaction proceeds. The salt bridge allows ions to pass through it to maintain charge balance in the cell. There are no free electrons in the solutions, so an external path for electrons is provided through an ammeter (in our case) or other load. On the cathode side, the electrons that were given up by the zinc combine with copper ions from the solution to form copper metal, which deposits on the copper electrode. The chemical reactions (shown in the diagram) occur at the electrode. Different types of batteries have different reactions, but all involve transfer of electrons in the external circuit and migration of ions internally as the battery discharges.

A single cell will have a certain fixed voltage. In the copper-zinc cell, the voltage is 1.1 V. In a lead-acid cell, the kind used in car batteries, a potential difference of about 2.1 V is between the anode and cathode. A typical car battery has six such cells connected in series. The voltage of any cell depends on the cell chemistry. Nickel-cadmium cells are about 1.2 V and lithium cells can be as high as almost 4 V, depending on the

www.EngineeringBooksPdf.com

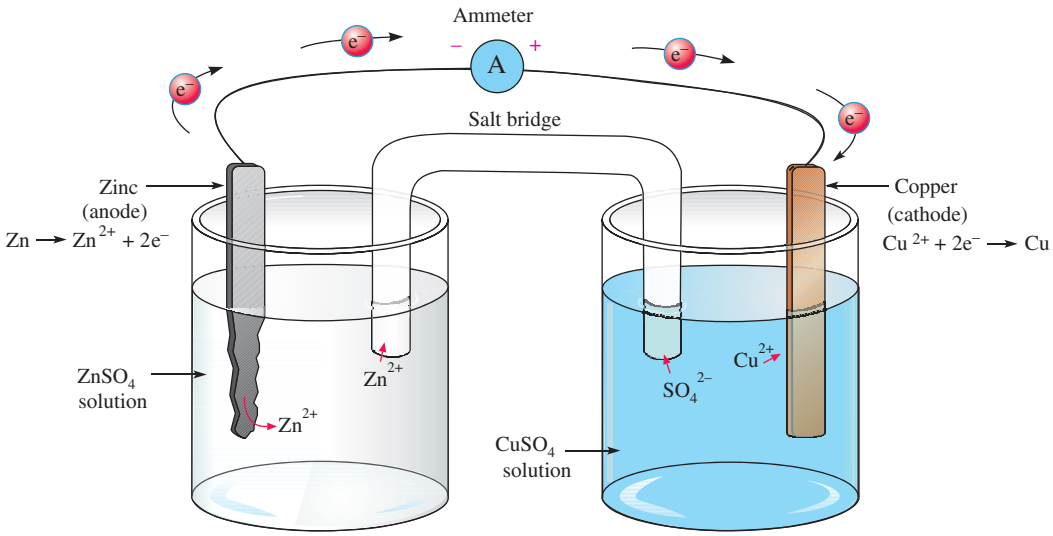

▲ **FIGURE 10**

A copper-zinc battery. The reaction can only occur if an external path is provided for the electrons. As the reaction proceeds, the Zn anode is eaten away and Cu^{2+} ions combine with electrons to form copper metal on the cathode.

second reactant. Cell chemistry also determines the shelf life and discharge characteristic for a battery. For example, a lithium-MnO_2 battery typically has five times the shelf life as a comparable carbon-zinc battery.

Although the voltage of a battery cell is fixed by its chemistry, the capacity is variable and depends on the quantity of materials in the cell. Essentially, the *capacity* of a cell is the number of electrons that can be obtained from it and is measured by the amount of current (defined in Section 4) that can be supplied over time.

Batteries normally consist of multiple cells that are electrically connected together internally. The way that the cells are connected and the type of cells determine the voltage and current capacity of the battery. If the positive electrode of one cell is connected to the negative electrode of the next and so on, as illustrated in Figure 11(a), the battery voltage is the sum of the individual cell voltages. This is called a *series connection.* To increase battery current capacity, the positive electrodes of several cells are connected together and all the negative electrodes are connected together, as illustrated in Figure 11(b). This is called a *parallel connection.*

There are many sizes of batteries; large batteries, with more material, can supply more current. In addition to the many sizes and shapes, batteries are classified according to their chemical makeup and if they are rechargeable or not. Primary batteries are not rechargeable and are discarded when they run down because their chemical reactions are irreversible;

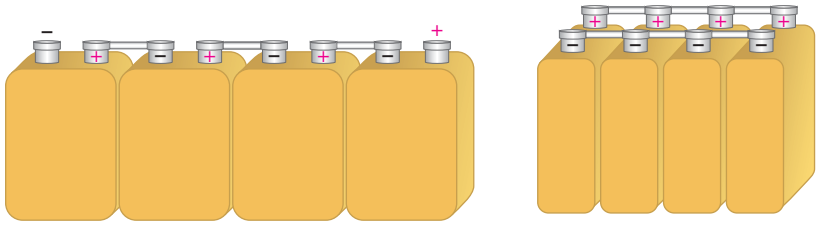

(a) Series-connected cells increase voltage.

(b) Parallel-connected cells increase current capacity.

▲ **FIGURE 11**

Cells connected to form batteries.

www.EngineeringBooksPdf.com

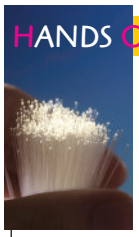

HANDS ON TIP

To store a lead-acid battery for an extended period, it should be fully charged and placed in a cool, dry location that is protected from freezing or excessive heat. A battery will self-discharge over time, so it needs to be periodically checked and recharged when it is less than 70% fully charged. Battery manufacturers will have specific recommendations for storage on their websites.

secondary batteries are reusable because their chemical reactions are reversible. The following are some important types of batteries:

- *Alkaline-MnO_2.* This is a primary battery that is commonly used in palm-type computers, photographic equipment, toys, radios, and recorders. It has a longer shelf life and a higher power density than a carbon-zinc battery.
- *Carbon-zinc.* This is a primary multiuse battery for flashlights and small appliances. It is available in a variety of sizes such as AAA, AA, C, and D.
- *Lead-acid.* This is a secondary (rechargable) battery that is commonly used in automotive, marine, and other similar applications.
- *Lithium-ion.* This is a secondary battery that is commonly used in all types of portable electronics. This type of battery is increasingly being used in defense, aerospace, and automotive applications.
- *Lithium-MnO_2.* This is a primary battery that is commonly used in photographic and electronic equipment, smoke alarms, personal organizers, memory backup, and communications equipment.
- *Nickel-metal hydride.* This is a secondary (rechargable) battery that is commonly used in portable computers, cell phones, camcorders, and other portable consumer electronics.
- *Silver oxide.* This is a primary battery that is commonly used in watches, photographic equipment, hearing aids, and electronics requiring high-capacity batteries.
- *Zinc air.* This is a primary battery that is commonly used in hearing aids, medical monitoring instruments, pagers, and other frequency-use applications.

Fuel Cells A **fuel cell** is a device that converts electrochemical energy into dc voltage directly. Fuel cells combine a fuel (usually hydrogen) with an oxidizing agent (usually oxygen). In the hydrogen fuel cell, hydrogen and oxygen react to form water, which is the only by-product. The process is clean, quiet, and more efficient than burning. Fuel cells and batteries are similar in that they both use an oxidation-reduction chemical reaction in which electrons are forced to travel in the external circuit. However, a battery is a closed system with all its chemicals stored inside, whereas in a fuel cell, the hydrogen and oxygen constantly flow into the cell where they combine and produce electricity.

Hydrogen fuel cells are usually classified by their operating temperature and the type of electrolyte they use. Some types work well for use in stationary power generation plants. Others may be useful for small portable applications or for powering cars. For example, the type that holds the most promise for automotive applications is the polymer exchange membrane fuel cell (PEMFC), which is a type of hydrogen fuel cell. A simplified diagram is shown in Figure 12 to illustrate the basic operation.

The channels disperse pressurized hydrogen gas and oxygen gas equally over the surface of the catalyst, which facilitates the reaction of the hydrogen and oxygen. When an H_2 molecule comes in contact with the platinum catalyst on the anode side of the fuel cell, it splits into two H^+ ions and two electrons (e^-). The hydrogen ions are passed through the polymer electrolyte membrane (PEM) onto the cathode. The electrons pass through the anode and into the external circuit to create current.

When an O_2 molecule comes in contact with the catalyst on the cathode side, it breaks apart, forming two oxygen ions. The negative charge of these ions attracts two H^+ ions through the electrolyte membrane and together they combine with electrons from the external circuit to form a water molecule (H_2O), which is passed from the cell as a by-product. In a single fuel cell, this reaction produces only about 0.7 V. To get higher voltages, multiple fuel cells are connected in series.

Current research on fuel cells is ongoing and is focused on developing reliable, smaller, and cost-effective components for vehicles and other applications. The conversion to fuel

www.EngineeringBooksPdf.com

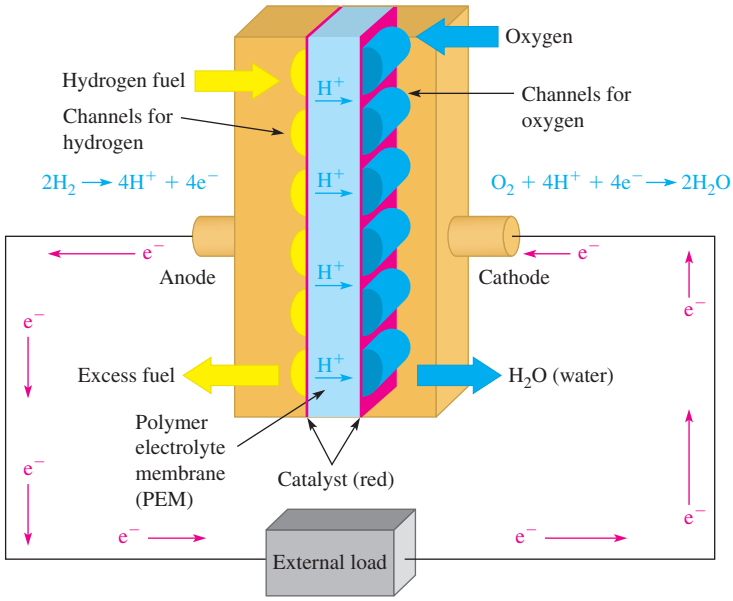

FIGURE 12

Simplified diagram of a fuel cell.

cells also requires research on how best to obtain and provide hydrogen fuel where it is needed. Potential sources for hydrogen include using solar, geothermal, or wind energy to break apart water. Hydrogen can also be obtained by breaking down coal or natural gas molecules, which are rich in hydrogen.

Solar Cells The operation of solar cells is based on the **photovoltaic effect**, which is the process whereby light energy is converted directly into electrical energy. A basic solar cell consists of two layers of different types of semiconductive materials joined together to form a junction. When one layer is exposed to light, many electrons acquire enough energy to break away from their parent atoms and cross the junction. This process forms negative ions on one side of the junction and positive ions on the other, and thus a potential difference (voltage) is developed. Figure 13 shows the construction of a basic solar cell.

Although solar cells can be used in room light for powering a calculator, research is focusing more on converting sunlight to electricity. There is considerable research in increasing the efficiency of solar cells and photovoltaic (PV) modules today because they are a very clean source of energy using sunlight. A complete system for continuous power generally requires a battery backup to provide energy when the sun is not shining. Solar cells are well suited for remote locations where energy sources are unavailable and are used in providing power to satellites.

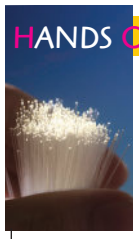

HANDS ON TIP

Scientists are working to develop flexible solar cells that can be printed by a banknote printing process. The technology uses organic cells that can be mass-produced cheaply by printing them in the same manner as money is printed. "Printable electronics" is at the forefront of polymer technology research.

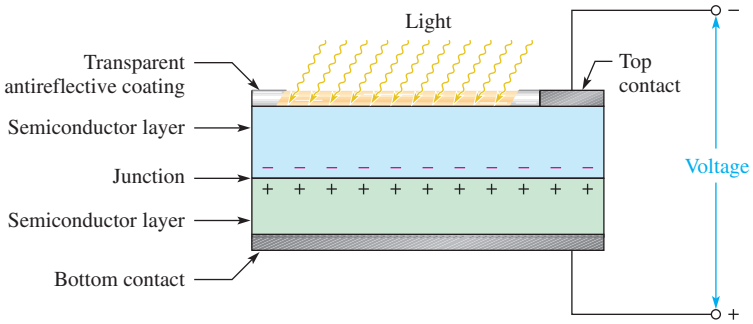

FIGURE 13

Construction of a basic solar cell.

www.EngineeringBooksPdf.com

▶ FIGURE 14

Cutaway view of a dc voltage generator.

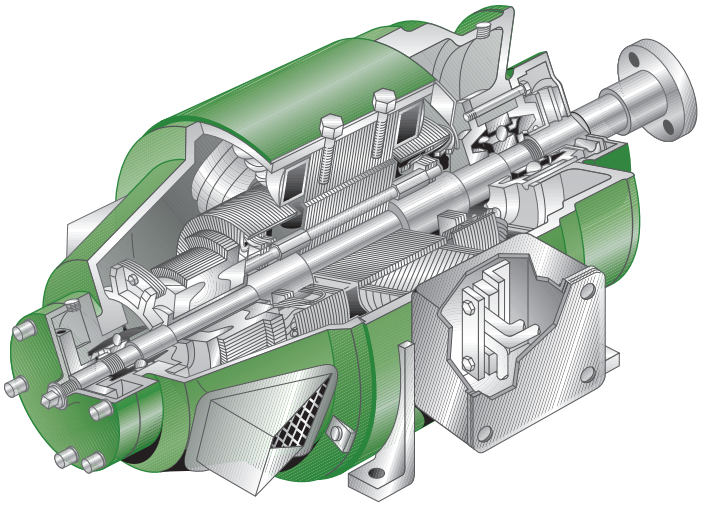

Generator Electrical **generators** convert mechanical energy into electrical energy using a principle called *electromagnetic induction*. A conductor is rotated through a magnetic field, and a voltage is produced across the conductor. A typical generator is pictured in Figure 14.

The Power Supply **Power supplies** convert the ac voltage from the wall outlet to a constant (dc) voltage that is available across two terminals. A basic commercial power supply is shown in Figure 15.

▶ FIGURE 15

A basic power supply. (Courtesy of B+K Precision)

Thermocouples The **thermocouple** is a thermoelectric type of voltage source that is commonly used to sense temperature. A thermocouple is formed by the junction of two dissimilar metals, and its operation is based on the **Seebeck effect** that describes the voltage generated at the junction of the metals as a function of temperature.

Standard types of thermocouples are characterized by the specific metals used. These standard thermocouples produce predictable output voltages for a range of temperatures. The most common is type K, made of chromel and alumel. Other types are also designated by letters as E, J, N, B, R, and S. Most thermocouples are available in wire or probe form.

Piezoelectric Sensors These sensors act as voltage sources and are based on the **piezoelectric effect** where a voltage is generated when a piezoelectric material is mechanically deformed by an external force. Quartz and ceramic are two types of piezoelectric material. Piezoelectric sensors are used in applications such as pressure sensors, force sensors, accelerometers, microphones, ultrasonic devices, and many others.

www.EngineeringBooksPdf.com

SECTION 3 CHECKUP

1. Define *voltage*.
2. What is the unit of voltage?
3. What is the voltage when 24 J of energy are required to move 10 C of charge?
4. List seven sources of voltage.
5. What type of chemical reaction occurs in all batteries and fuel cells?

4 CURRENT

Voltage provides energy to electrons that allows them to move through a circuit. This movement of electrons is the current, which results in work being done in an electric circuit.

After completing this section, you should be able to

- **Define *current* and discuss its characteristics**
  - Explain the movement of electrons
  - State the formula for current
  - Name and define the unit of current

As you have learned, free electrons are available in all conductive and semiconductive materials. These outer-shell electrons drift randomly in all directions, from atom to atom, within the structure of the material, as indicated in Figure 16. These electrons are loosely bound to the positive metal ions in the material; but because of thermal energy, they are free to move about the crystalline structure of the metal.

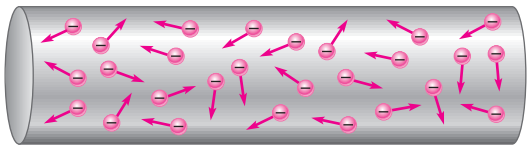

◀ **FIGURE 16**

Random motion of free electrons in a material.

If a voltage is placed across a conductive or semiconductive material, one end becomes positive and the other negative, as indicated in Figure 17. The repulsive force produced by the negative voltage at the left end causes the free electrons (negative charges) to move toward the right. The attractive force produced by the positive voltage at the right end pulls the free electrons to the right. The result is a net movement of the free electrons from the negative end of the material to the positive end, as shown in Figure 17.

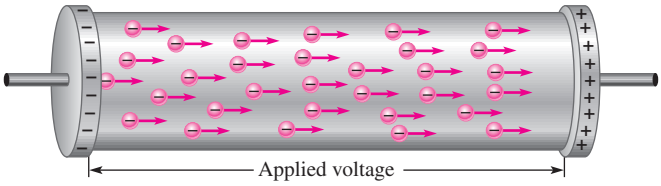

▲ **FIGURE 17**

Electrons flow from negative to positive when a voltage is applied across a conductive or semiconductive material.

HISTORY NOTE

André Marie Ampère 1775–1836

In 1820 Ampère, a Frenchman, developed a theory of electricity and magnetism that was fundamental for 19th century developments in the field. He was the first to build an instrument to measure charge flow (current). The unit of electrical current is named in his honor. (Photo credit: AIP Emilio Segrè Visual Archives.)

www.EngineeringBooksPdf.com

The movement of the free electrons from the negative end of a material to the positive end is the electrical current, symbolized by *I*.

Electrical current is the rate of flow of charge.

Current in a conductive material is measured by the number of electrons (amount of charge) that flow past a point in a unit of time.

Equation 3

$$I = \frac{Q}{t}$$

where *I* is current in amperes (A), *Q* is the charge of the electrons in coulombs (C), and *t* is time in seconds (s). As a simple analogy, you can think of current as corresponding to water flowing through a pipe in a water system when pressure (corresponding to voltage) is applied by a pump (corresponding to a voltage source). *Voltage causes current.*

Ampere: The Unit of Current

Current is measured in a unit called the *ampere* or *amp* for short, symbolized by A.

One ampere (1 A) is the amount of current that exists when a number of electrons having a total charge of one coulomb (1 C) move through a given cross-sectional area in one second (1 s).

See Figure 18. Remember, one coulomb is the charge carried by 6.25×10^{18} electrons.

▶ FIGURE 18

Illustration of 1 A of current (1 C/s) in a material.

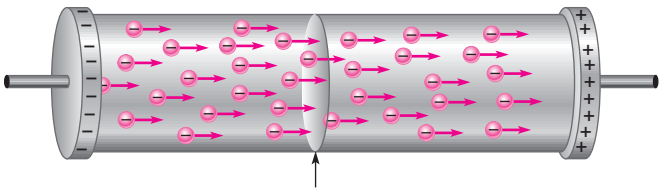

When a number of electrons having a total charge of 1 C pass through a cross-sectional area in 1 s, there is 1 A of current.

EXAMPLE 3

Ten coulombs of charge flow past a given point in a wire in 2 s. What is the current in amperes?

Solution

$$I = \frac{Q}{t} = \frac{10\text{ C}}{2\text{ s}} = \mathbf{5\ A}$$

Related Problem

If there are 8 A of direct current through the filament of a light bulb, how many coulombs have moved through the filament in 1.5 s?

The Current Source

The Ideal Current Source As you know, an ideal voltage source can provide a constant voltage for any load. An ideal **current source** can provide a constant current in any load. Just as in the case of a voltage source, the ideal current source does not exist but can be approximated in practice. We will assume ideal unless otherwise specified.

The symbol for a current source is shown in Figure 19(a). The graph for an ideal current source is a horizontal line as illustrated in Figure 19(b). This graph is called the *IV* characteristic curve. Notice that the current is constant for any voltage across the current source. In a nonideal current source, the current drops off as shown by the dashed line in Figure 19(b).

www.EngineeringBooksPdf.com

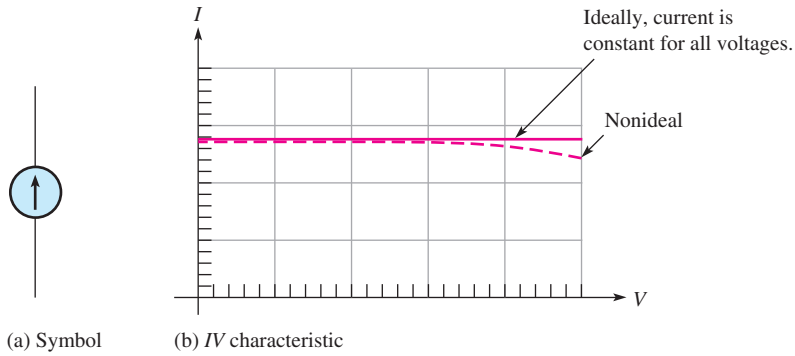

◀ FIGURE 19

The current source.

Actual Current Sources Power supplies are normally thought of as voltage sources because they are the most common type of source in the laboratory. However, current sources are another type of power supply. Current sources may be "stand-alone" instruments or may be combined with other instruments, such as a voltage source, DMM, or function generator. Examples of combination instruments are the source-measurement units shown in Figure 20. These units can be set up as voltage or current sources and include a built-in DMM, as well as other instruments. They are used primarily for testing transistors and other semiconductors.

SAFETY NOTE

Current sources change the output voltage in order to supply a constant current to the load. For example, a meter calibrator can have a different output voltage that depends on the meter under test. You should never touch the leads from a current source; the voltage can be high, and a shock will result, particularly if the load is a high resistance load or the load is disconnected when the current source is turned on.

▲ FIGURE 20

Source-measurement units that have current and voltage sources. (Courtesy of Keithley Instruments)

In most transistor circuits, the transistor acts as a current source because part of the *IV* characteristic curve is a horizontal line as shown by the transistor characteristic in Figure 21. The flat part of the graph indicates where the transistor current is constant over a range of voltages. The constant-current region is used to form a constant-current source.

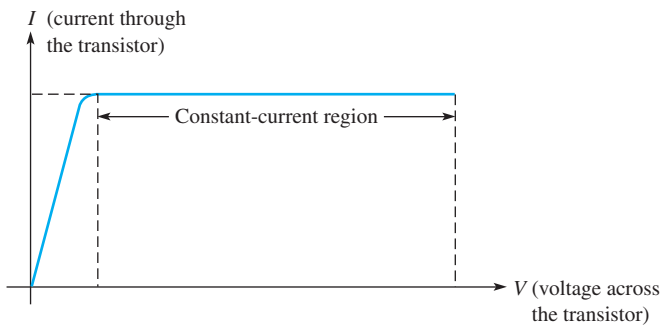

◀ FIGURE 21

Characteristic curve of a transistor showing the constant-current region.

www.EngineeringBooksPdf.com

SECTION 4 CHECKUP

1. Define *current* and state its unit.
2. How many electrons make up one coulomb of charge?
3. What is the current in amperes when 20 C flow past a point in a wire in 4 s?

5 RESISTANCE

When there is current through a material, the free electrons move through the material and occasionally collide with atoms. These collisions cause the electrons to lose some of their energy, and thus their movement is restricted. The more collisions, the more the flow of electrons is restricted. This restriction varies and is determined by the type of material. The property of a material that restricts the flow of electrons is called *resistance,* designated with an *R.*

After completing this section, you should be able to

- **Define *resistance* and discuss its characteristics**
  - Name and define the unit of resistance
  - Describe the basic types of resistors
  - Determine resistance value by color code or labeling

Resistance is the opposition to current.

▲ FIGURE 22

Resistance/resistor symbol.

The schematic symbol for resistance is shown in Figure 22.

When there is current through any material that has resistance, heat is produced by the collisions of free electrons and atoms. Therefore, wire, which typically has a very small resistance, can become warm or even hot when there is sufficient current through it.

As a simple analogy, you can think of a resistor as corresponding to a partially open valve in a closed water system that restricts the amount of water flowing through a pipe. If the valve is opened more (corresponding to less resistance), the water flow (corresponding to current) increases. If the valve is closed a little (corresponding to more resistance), the water flow (corresponding to current) decreases.

Ohm: The Unit of Resistance

Resistance, *R*, is expressed in the unit of ohms, which is symbolized by the Greek letter omega (Ω).

One ohm (1 Ω) of resistance exists when there is one ampere (1 A) of current in a material with one volt (1 V) applied across the material.

Conductance The reciprocal of resistance is **conductance**, symbolized by *G*. It is a measure of the ease with which current is established. The formula is

Equation 4

$$G = \frac{1}{R}$$

The unit of conductance is the **siemens**, symbolized by S. For example, the conductance of a 22 kΩ resistor is

$$G = \frac{1}{22\ \text{k}\Omega} = 45.5\ \mu\text{S}$$

Occasionally, the obsolete unit of *mho* is still used for conductance.

www.EngineeringBooksPdf.com

Resistors

Components that are specifically designed to have a certain amount of resistance are called **resistors**. The principal applications of resistors are to limit current, divide voltage, and, in certain cases, generate heat. Although different types of resistors come in many shapes and sizes, they can all be placed in one of two main categories: fixed or variable.

Fixed Resistors Fixed resistors are available with a large selection of resistance values that are set during manufacturing and cannot be changed easily. Fixed resistors are constructed using various methods and materials. Figure 23 shows several common types.

One common fixed resistor is the carbon-composition type, which is made with a mixture of finely ground carbon, insulating filler, and a resin binder. The ratio of carbon to insulating filler sets the resistance value. The mixture is formed into rods which are cut into short lengths, and lead connections are made. The entire resistor is then encapsulated in an insulated coating for protection. Figure 24(a) shows the construction of a typical carbon-composition resistor.

The chip resistor is another type of fixed resistor and is in the category of SMT (surface-mount technology) components. It has the advantage of a very small size for compact

HISTORY NOTE

Georg Simon Ohm
1787–1854

Ohm was born in Bavaria and struggled for years to gain recognition for his work in formulating the relationship of current, voltage, and resistance. This mathematical relationship is known today as Ohm's law and the unit of resistance is named in his honor. (Photo credit: Library of Congress, LC-USZ62–40943.)

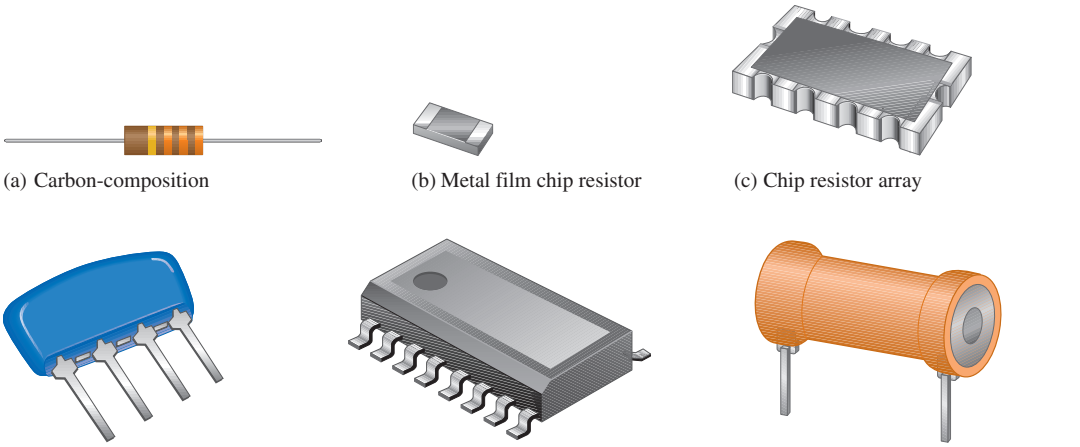

(a) Carbon-composition (b) Metal film chip resistor (c) Chip resistor array

(d) Resistor network (simm) (e) Resistor network (surface mount) (f) Radial-lead for PC board insertion

▲ **FIGURE 23**

Typical fixed resistors.

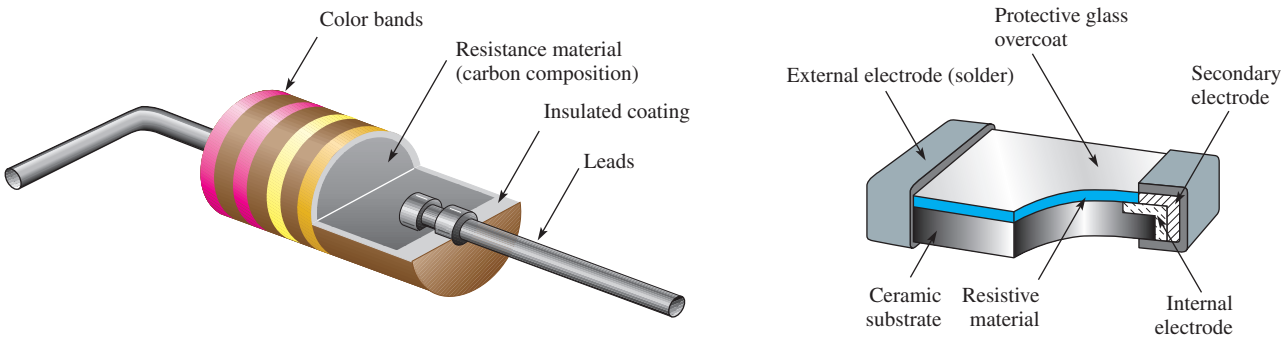

(a) Cutaway view of a carbon-composition resistor (b) Cutaway view of a tiny chip resistor

▲ **FIGURE 24**

Two types of fixed resistors (not to scale).

www.EngineeringBooksPdf.com

HISTORY NOTE

Ernst Werner von Siemens 1816–1892

Siemens was born in Prussia. While in prison for acting as a second in a duel, he began experiments with chemistry, which led to his invention of the first electroplating system. In 1837, Siemens began making improvements in the early telegraph and contributed greatly to the development of telegraphic systems. The unit of conductance is named in his honor. (Photo credit: AIP Emilio Segrè Visual Archives, E. Scott Barr Collection.)

assemblies. Small-value chip resistors (<1 Ω) can be made with very close tolerances (±0.5%) and have application as current-sensing resistors. Figure 24(b) shows the construction of a chip resistor.

Other types of fixed resistors include carbon film, metal film, metal-oxide film, and wirewound. In film resistors, a resistive material is deposited evenly onto a high-grade ceramic rod. The resistive film may be carbon (carbon film) or nickel chromium (metal film). In these types of resistors, the desired resistance value is obtained by removing part of the resistive material in a helical pattern along the rod using a spiraling technique, as shown in Figure 25(a). Very close **tolerance** can be achieved with this method. Film resistors are also available in the form of resistor networks, as shown in Figure 25(b).

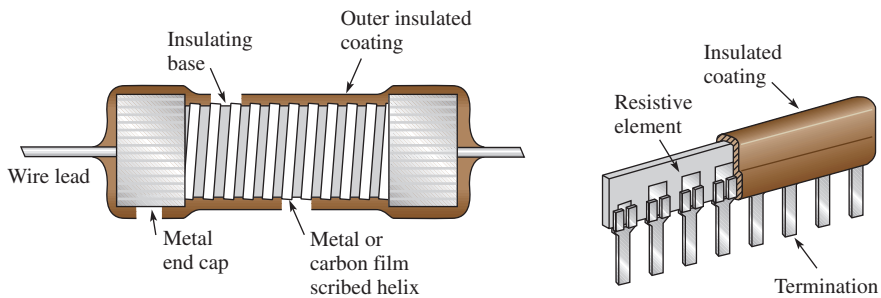

(a) Film resistor showing spiraling technique (b) Resistor network

▲ **FIGURE 25**

Construction views of typical film resistors.

Wirewound resistors are constructed with resistive wire wound around an insulating rod and then sealed. Normally, wirewound resistors are used because of their relatively high power ratings. Since they are constructed with a coil of wire, wirewound resistors have significant inductance and are not used at higher frequencies. Some typical wirewound resistors are shown in Figure 26.

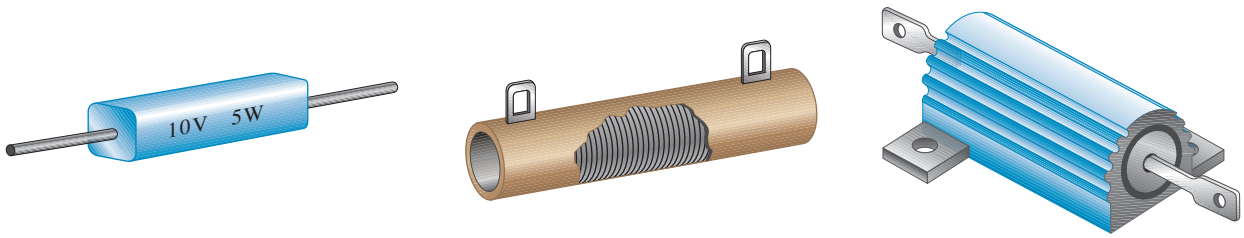

▲ **FIGURE 26**

Typical wirewound power resistors.

Resistor Color Codes Some types of fixed resistors with value tolerances of 5% or 10% are color coded with four bands to indicate the resistance value and the tolerance. This color-code band system is shown in Figure 27, and the **color code** is listed in Table 1. The bands are always located closer to one end.

The 4-band color code is read as follows:

1. Start with the band closest to one end of the resistor. The first band is the first digit of the resistance value. If it is not clear which is the banded end, start from the end that does not begin with a gold or silver band.
2. The second band is the second digit of the resistance value.

www.EngineeringBooksPdf.com

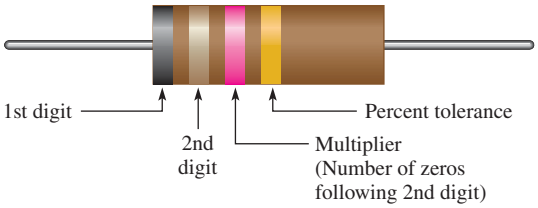

◀ FIGURE 27

Color-code bands on a 4-band resistor.

◀ TABLE 1

4-band resistor color code.

	Digit	Color
Resistance value, first three bands: First band—1st digit Second band—2nd digit *Third band—multiplier (number of zeros following the 2nd digit)	0	Black
	1	Brown
	2	Red
	3	Orange
	4	Yellow
	5	Green
	6	Blue
	7	Violet
	8	Gray
	9	White
Fourth band—tolerance	±5%	Gold
	±10%	Silver

* For resistance values less than 10 Ω, the third band is either gold or silver. Gold is for a multiplier of 0.1 and silver is for a multiplier of 0.01.

3. The third band is the number of zeros following the second digit, or the *multiplier.*
4. The fourth band indicates the percent tolerance and is usually gold or silver. If there is no fourth band, the tolerance is ±20%.

For example, a 5% tolerance means that the *actual* resistance value is within ±5% of the color-coded value. Thus, a 100 Ω resistor with a tolerance of ±5% can have an acceptable range of values from a minimum of 95 Ω to a maximum of 105 Ω.

As indicated in the table, for resistance values less than 10 Ω, the third band is either gold or silver. Gold in the third band represents a multiplier of 0.1, and silver represents 0.01. For example, a color code of red, violet, gold, and silver represents 2.7 Ω with a tolerance of ±10%.

EXAMPLE 4

Find the resistance values in ohms and the percent tolerance for each of the color-coded resistors shown in Figure 28.

▶ FIGURE 28

www.EngineeringBooksPdf.com

Solution **(a)** First band is red = 2, second band is violet = 7, third band is orange = 3 zeros, fourth band is silver = ±10% tolerance.

$$R = \mathbf{27{,}000\ \Omega \pm 10\%}$$

(b) First band is brown = 1, second band is black = 0, third band is brown = 1 zero, fourth band is silver = ±10% tolerance.

$$R = \mathbf{100\ \Omega \pm 10\%}$$

(c) First band is green = 5, second band is blue = 6, third band is green = 5 zeros, fourth band is gold = ±5% tolerance.

$$R = \mathbf{5{,}600{,}000\ \Omega \pm 5\%}$$

Related Problem A certain resistor has a yellow first band, a violet second band, a red third band, and a gold fourth band. Determine the value in ohms and its percent tolerance.

Five-Band Color Code Certain precision resistors with tolerances of 2%, 1%, or less are generally color coded with five bands, as shown in Figure 29. Begin at the band closest to one end. The first band is the first digit of the resistance value, the second band is the second digit, the third band is the third digit, the fourth band is the multiplier (number of zeros after the third digit), and the fifth band indicates the tolerance. Table 2 shows the 5-band color code.

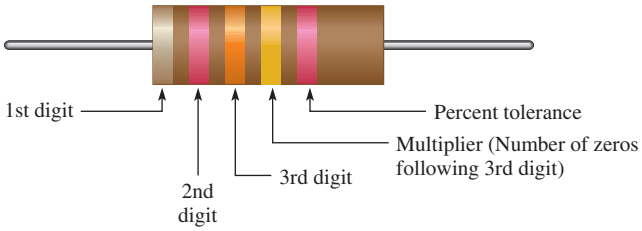

▶ **FIGURE 29**

Color-code bands on a 5-band resistor.

▶ **TABLE 2**

5-band resistor color code.

	DIGIT	COLOR
Resistance value, first four bands:	0	Black
	1	Brown
	2	Red
First band—1st digit	3	Orange
Second band—2nd digit	4	Yellow
Third band—3rd digit	5	Green
Fourth band—multiplier	6	Blue
(number of zeros	7	Violet
following 3rd digit)	8	Gray
	9	White
Fourth band—multiplier	0.1	Gold
	0.01	Silver
	±2%	Red
	±1%	Brown
Fifth band—tolerance	±0.5%	Green
	±0.25%	Blue
	±0.1%	Violet

www.EngineeringBooksPdf.com

EXAMPLE 5

Find the resistance value in ohms and the percent tolerance for each of the color-coded resistors shown in Figure 30.

▶ **FIGURE 30**

Solution

(a) First band is red = 2, second band is violet = 7, third band is black = 0, fourth band is gold = ×0.1, fifth band is red = ±2% tolerance.

$$R = 270 \times 0.1 = \mathbf{27\ \Omega \pm 2\%}$$

(b) First band is yellow = 4, second band is black = 0, third band is red = 2, fourth band is black = 0, fifth band is brown = ±1% tolerance.

$$R = \mathbf{402\ \Omega \pm 1\%}$$

(c) First band is orange = 3, second band is orange = 3, third band is red = 2, fourth band is orange = 3, fifth band is green = ±0.5% tolerance.

$$R = \mathbf{332{,}000\ \Omega \pm 0.5\%}$$

Related Problem A certain resistor has a yellow first band, a violet second band, a green third band, a gold fourth band, and a red fifth band. Determine its value in ohms and its percent tolerance.

Resistor Label Codes Not all types of resistors are color coded. Many, including surface-mount resistors, use typographical marking to indicate the resistance value and tolerance. These label codes consist of either all numbers (numeric) or a combination of numbers and letters (alphanumeric). In some cases when the body of the resistor is large enough, the entire resistance value and tolerance are stamped on it in standard form. For example, a 33,000 Ω resistor may be labeled as 33 kΩ.

Numeric labeling uses three digits to indicate the resistance value, as shown in Figure 31 using a specific example. The first two digits give the first two digits of the resistance value, and the third digit gives the multiplier or number of zeros that follow the first two digits. This code is limited to values of 10 Ω or greater.

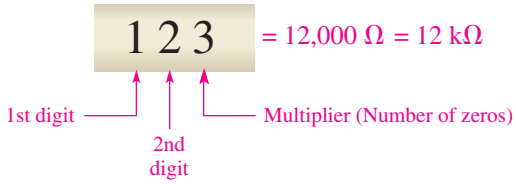

◀ **FIGURE 31**

Example of three-digit labeling for a resistor.

Another common type of marking is a three- or four-character label that uses both digits and letters. An alphanumeric label typically consists of only three digits or two or three digits and one of the letters R, K, or M. The letter is used to indicate the multiplier, and the position of the letter indicates the decimal point placement. The letter R indicates a multiplier of 1 (no zeros after the digits), the K indicates a multiplier of 1000 (three zeros after the digits), and the M indicates a multiplier of 1,000,000 (six zeros after the digits). In this format, values from 100 to 999 consist of three digits and no letter to represent the three digits in the resistance value. Figure 32 shows three examples of this type of resistor label.

www.EngineeringBooksPdf.com

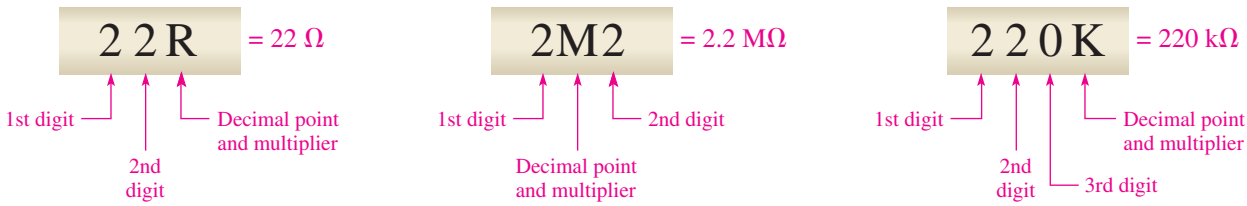

▲ **FIGURE 32**

Examples of the alphanumeric resistor label.

EXAMPLE 6

Interpret the following alphanumeric resistor labels:

(a) 470 **(b)** 5R6 **(c)** 68K **(d)** 10M **(e)** 3M3

Solution **(a)** 470 = **470 Ω** **(b)** 5R6 = **5.6 Ω** **(c)** 68K = **68 kΩ**

(d) 10M = **10 MΩ** **(e)** 3M3 = **3.3 MΩ**

Related Problem What is the resistance indicated by 1K25?

One system of labels for resistance tolerance values uses the letters F, G, and J:

$$F = \pm 1\% \qquad G = \pm 2\% \qquad J = \pm 5\%$$

For example, 620F indicates a 620 Ω resistor with a tolerance of ±1%, 4R6G is a 4.6 Ω ±2% resistor, and 56KJ is a 56 kΩ ±5% resistor.

Variable Resistors Variable resistors are designed so that their resistance values can be changed easily. Two basic uses for variable resistors are to divide voltage and to control current. The variable resistor used to divide voltage is called a **potentiometer**. The variable resistor used to control current is called a **rheostat**. Schematic symbols for these types are shown in Figure 33. The potentiometer is a three-terminal device, as indicated in part (a). Terminals 1 and 2 have a fixed resistance between them, which is the total resistance. Terminal 3 is connected to a moving contact **(wiper).** You can vary the resistance between 3 and 1 or between 3 and 2 by moving the contact.

▶ **FIGURE 33**

Potentiometer and rheostat symbols.

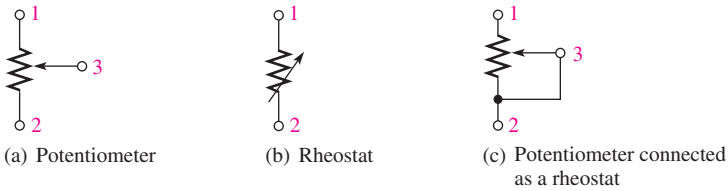

(a) Potentiometer (b) Rheostat (c) Potentiometer connected as a rheostat

Figure 33(b) shows the rheostat as a two-terminal variable resistor. Part (c) shows how you can use a potentiometer as a rheostat by connecting terminal 3 to either terminal 1 or terminal 2. Parts (b) and (c) are equivalent symbols. Some typical potentiometers are pictured in Figure 34. The construction view is shown under the normal view.

Potentiometers and rheostats can be classified as linear or tapered, as shown in Figure 35, where a potentiometer with a total resistance of 100 Ω is used as an example. As shown in part (a), in a linear potentiometer, the resistance between either terminal and the moving contact varies linearly with the position of the moving contact. For example, one-half of a turn results in one-half the total resistance. Three-quarters of a turn results in three-quarters

www.EngineeringBooksPdf.com

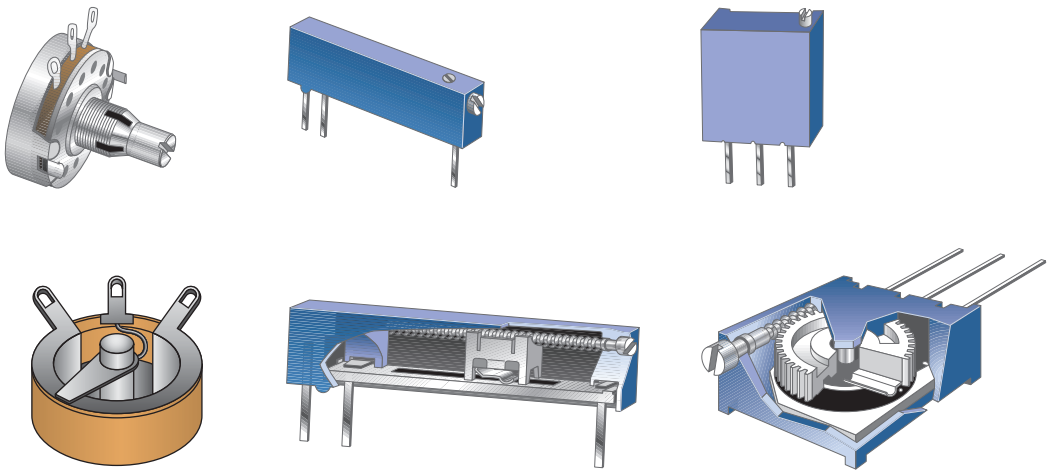

▲ FIGURE 34

Typical potentiometers and construction views.

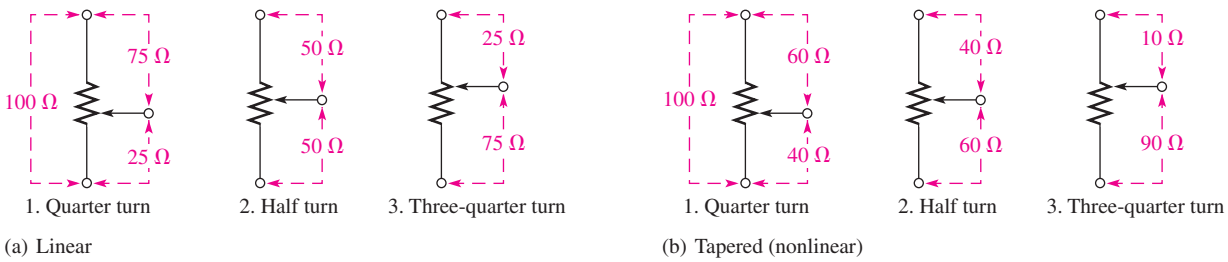

▲ FIGURE 35

Examples of (a) linear and (b) tapered potentiometers.

of the total resistance between the moving contact and one terminal, or one-quarter of the total resistance between the other terminal and the moving contact.

In a **tapered** potentiometer, the resistance varies nonlinearly with the position of the moving contact, so that one-half of a turn does not necessarily result in one-half the total resistance. This concept is illustrated in Figure 35(b), where the nonlinear values are arbitrary.

The potentiometer is used as a voltage-control device. When a fixed voltage is applied across the end terminals, a variable voltage is obtained at the wiper contact with respect to either end terminal. The rheostat is used as a current-control device; the current can be changed by changing the wiper position.

Variable Resistance Sensors Many sensors operate on the concept of a variable resistance, in which a physical quantity alters the electrical resistance. Depending on the sensor and the measurement requirements, the change in resistance may be determined directly or indirectly using the resistance change to alter a voltage or current.

Examples of resistance sensors in include **thermistors** that change resistance as a function of temperature, **photoconductive cells** that change resistance as a function of light, and **strain gauges** that change resistance when a force is applied to them. Thermistors are commonly used in thermostats. Photocells have many applications; for example, they are used to turn on street lights at dusk and turn them off at dawn. Strain gauges are widely used in scales and applications where mechanical motion needs to be sensed. The measuring instruments for strain gauges need to be very sensitive because the change in resistance is very small. Figure 36 shows symbols for these types of resistance sensors.

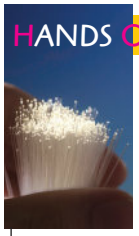

HANDS ON TIP

A special type of resistor is used for sensing forces ranging from the pressure of a finger tip on a keyboard to the weight of a truck on a scale. These specialized resistors are known as force-sensing resistors (FSRs) and are a type of transducer. The FSR exhibits a change in resistance in response to an applied force. The resistance change is used to indicate the amount of force.

www.EngineeringBooksPdf.com

▶ **FIGURE 36**

Symbols for resistance devices with sensitivities to temperature, light, and force.

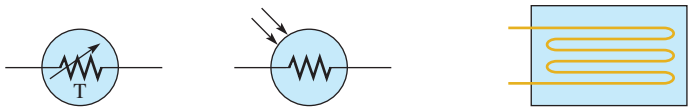

(a) Thermistor (b) Photoconductive cell (c) Strain gauge

SECTION 5 CHECKUP

1. Define *resistance* and name its unit.
2. What are the two main categories of resistors? Briefly explain the difference between them.
3. In the 4-band resistor color code, what does each band represent?
4. Determine the resistance and percent tolerance for each of the following color codes:
   (a) yellow, violet, red, gold (b) blue, red, orange, silver
   (c) brown, gray, black, gold (d) red, red, blue, red, green
5. What resistance value is indicated by each alphanumeric label:
   (a) 33R (b) 5K6 (c) 900 (d) 6M8
6. What is the basic difference between a rheostat and a potentiometer?
7. Name three resistance sensors and the physical quantity that affects their resistance.

6 THE ELECTRIC CIRCUIT

A basic electric circuit is an arrangement of physical components that use voltage, current, and resistance to perform some useful function.

After completing this section, you should be able to

- **Describe a basic electric circuit**
  - Relate a schematic to a physical circuit
  - Define *open circuit* and *closed circuit*
  - Describe various types of protective devices
  - Describe various types of switches
  - Explain how wire sizes are related to gauge numbers
  - Define *ground* or *common*

SAFETY NOTE

To avoid electrical shock, never touch a circuit while it is connected to a voltage source. If you need to handle a circuit, remove a component, or change a component, first make sure the voltage source is disconnected.

Basically, an electric **circuit** consists of a voltage source, a load, and a path for current between the source and the load. The **load** is a device on which work is done by the current through it. Figure 37 shows an example of a simple electric circuit: a battery connected to a lamp with two conductors (wires). The battery is the voltage source, the lamp is the load on the battery because it draws current from the battery, and the two wires provide the current path from the negative terminal of the battery to the lamp and back to the positive terminal of the battery, as indicated by the red arrows. There is current through the filament of the lamp (which has a resistance), causing it to become hot enough to emit visible light. Current through the battery is produced by chemical action.

In many practical cases, one terminal of the battery is connected to a ground (common) point. For example, in automobiles, the negative battery terminal is generally connected to the metal chassis of the car. The chassis is the ground for the automobile

www.EngineeringBooksPdf.com

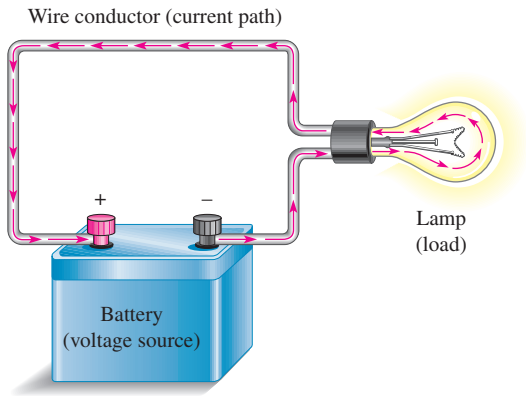

◀ FIGURE 37

A simple electric circuit.

electrical system and provides a current path for the circuit. (The concept of *ground* is covered later in this chapter.)

An electric circuit can be represented by a **schematic**, a diagram that shows the interconnection of components, using standard symbols for each element, as shown in Figure 38 for the simple circuit in Figure 37. A schematic shows, in an organized manner, how the various components in a given circuit are interconnected so that the operation of the circuit can be determined.

▲ FIGURE 38

A schematic for the circuit in Figure 37.

Circuit Current Control and Protection

The circuit in Figure 39(a) illustrates a **closed circuit**—that is, a circuit in which the current has a complete path. An **open circuit** is a circuit in which the current path is broken so that there is no current, as shown in part (b). An open circuit is considered to have infinite resistance (*infinite* means immeasurably large).

Mechanical Switches **Switches** are commonly used for controlling the opening or closing of circuits. For example, a switch is used to turn a lamp on or off, as illustrated in Figure 39. Each circuit pictorial is shown with its associated schematic. The type of switch indicated is a *single-pole–single-throw* (SPST) toggle switch. The term *pole* refers to the movable arm in a switch, and the term *throw* indicates the number of contacts that are affected (either opened or closed) by a single switch action (a single movement of a pole).

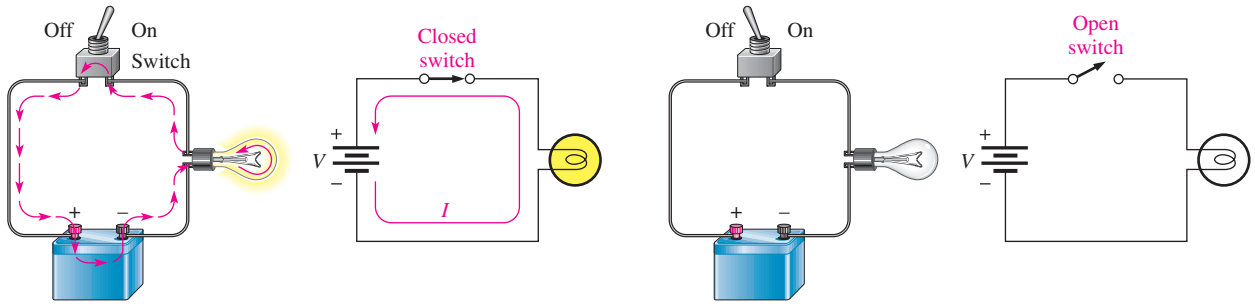

(a) There is current in a *closed* circuit because there is a complete current path (switch is ON or in the *closed* position). Current is always indicated by a red arrow in this text.

(b) There is no current in an *open* circuit because the path is broken (switch is OFF or in the *open* position).

▲ FIGURE 39

Illustration of closed and open circuits using an SPST switch for control.

Figure 40 shows a somewhat more complicated circuit using a *single-pole–double-throw* (SPDT) type of switch to control the current to two different lamps. When one lamp is on, the other is off, and vice versa, as illustrated by the two schematics that represent each of the switch positions.

www.EngineeringBooksPdf.com

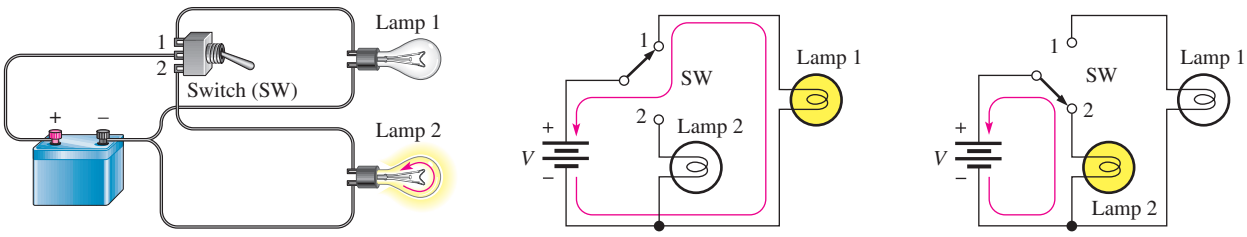

(a) Pictorial

(b) A schematic showing Lamp 1 on and Lamp 2 off

(c) A schematic showing Lamp 2 on and Lamp 1 off

▲ **FIGURE 40**

An example of an SPDT switch controlling two lamps.

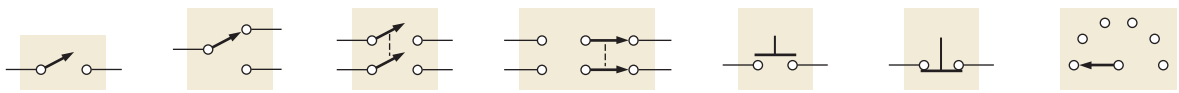

(a) SPST (b) SPDT (c) DPST (d) DPDT (e) NOPB (f) NCPB (g) Single-pole rotary (6-position)

▲ **FIGURE 41**

Switch symbols.

HANDS ON TIP

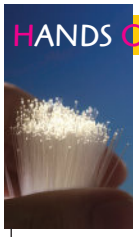

Small electronic parts can be damaged easily if you apply too much heat to them when soldering. The small switches shown in Figure 42 frequently are constructed with plastic that can melt and render the switch useless. Manufacturers usually supply a maximum time and temperature that can be applied to a part without damage. A small heat sink can be temporarily connected between the point where solder is applied and the sensitive region of the component.

In addition to the SPST and the SPDT switches (symbols are shown in Figure 41(a) and (b)), the following other types of switches are also important:

- *Double-pole–single-throw (DPST).* The DPST switch permits simultaneous opening or closing of two sets of contacts. The symbol is shown in Figure 41(c). The dashed line indicates that the contact arms are mechanically linked so that both move with a single switch action.
- *Double-pole–double-throw (DPDT).* The DPDT switch provides connection from one set of contacts to either of two other sets. The schematic symbol is shown in Figure 41(d).
- *Push button (PB).* In the normally open push-button switch (NOPB), shown in Figure 41(e), connection is made between two contacts when the button is depressed, and connection is broken when the button is released. In the normally closed push-button switch (NCPB), shown in Figure 41(f), connection between the two contacts is broken when the button is depressed.
- *Rotary.* In a rotary switch, a knob is turned to make a connection between one contact and any one of several others. A symbol for a simple six-position rotary switch is shown in Figure 41(g).

Figure 42 shows several varieties of switches, and Figure 43 shows a construction view of a typical toggle switch. In addition to mechanical switches, a transistor can be used as the equivalent of a single-pole–single-throw switch in certain applications.

Protective Devices **Fuses** and **circuit breakers** are placed in the current path and are used to deliberately create an open circuit when the current exceeds a specified number of amperes due to a malfunction or other abnormal condition in a circuit. For example, a fuse or circuit breaker with a 20 A rating will open a circuit when the current exceeds 20 A.

The basic difference between a fuse and a circuit breaker is that when a fuse is "blown," it must be replaced; but when a circuit breaker opens, it can be reset and reused repeatedly. Both of these devices protect against damage to a circuit due to excess current or prevent a hazardous condition created by the overheating of wires and other components when the current is too great. Because fuses cut off excess current more quickly

www.EngineeringBooksPdf.com

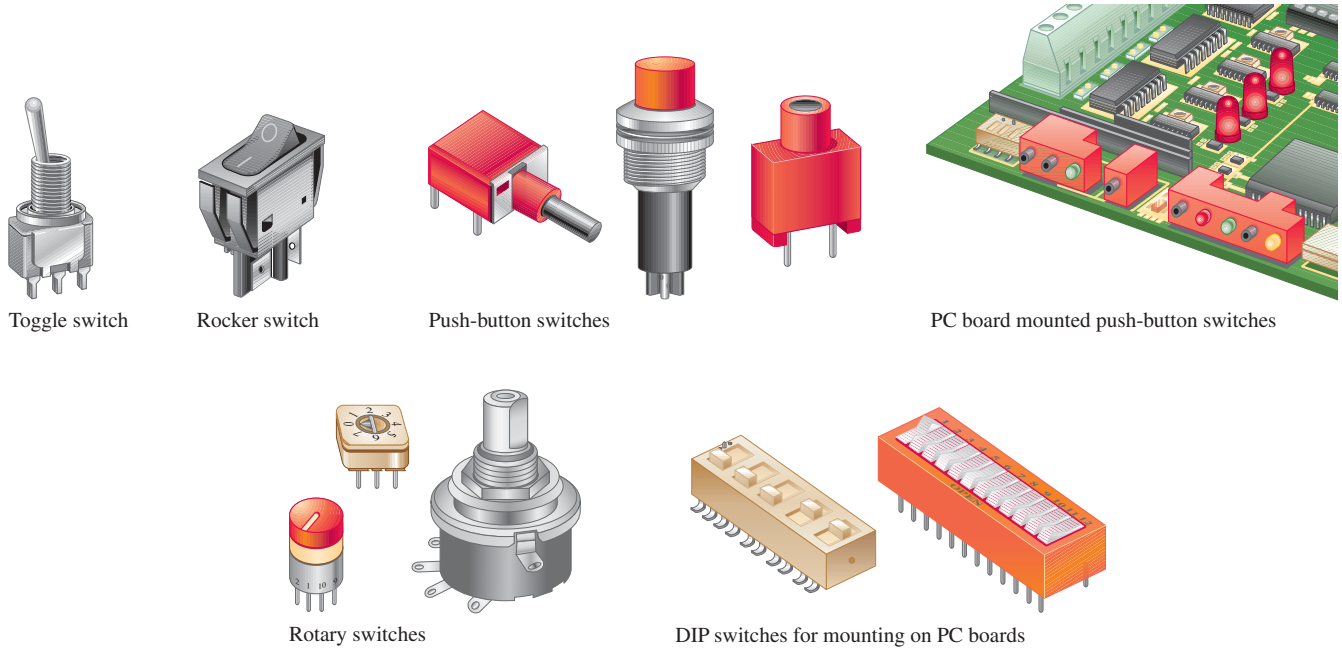

▲ **FIGURE 42**

Typical mechanical switches.

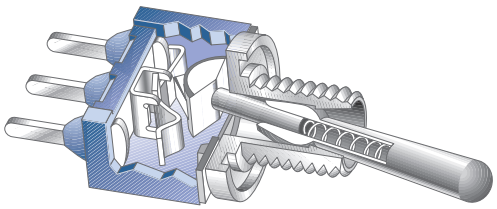

◀ **FIGURE 43**

Construction view of a typical toggle switch.

than circuit breakers, fuses are used whenever delicate electronic equipment needs to be protected. Several typical fuses and circuit breakers, along with their schematic symbols, are shown in Figure 44.

Two basic categories of fuses in terms of their physical configuration are cartridge type and plug type (screw in). Cartridge type fuses have various shaped housings with leads or other types of contacts as shown in Figure 44(a). A typical plug type fuse is shown in part (b). Fuse operation is based on the melting temperature of a wire or other metal element. As current increases, the fuse element heats up and when the rated current is exceeded, the element reaches its melting temperature and opens, thus removing power from the circuit.

Two common types of fuses are the fast-acting and the time-delay (slow blow). Fast-acting fuses are type F and time-delay fuses are type T. In normal operation, fuses are often subjected to intermittent current surges that may exceed the rated current, such as when power to a circuit is turned on. Over time, this reduces the fuse's ability to withstand short surges or even current at the rated value. A slow blow fuse can tolerate greater and longer duration surges of current than the typical fast-acting fuse. A fuse symbol is shown in Figure 44(d).

Typical circuit breakers are shown in Figure 44(c) and the symbol is shown in part (e). Generally, a circuit breaker detects excess current either by the heating effect of the current or by the magnetic field it creates. In a circuit breaker based on the heating effect, a bimetallic spring opens the contacts when the rated current is exceeded. Once opened, the

SAFETY NOTE

Always use fully insulated fuse pullers to remove and replace fuses in an electrical box. Even if the disconnect switch is in the off position, line voltage is still present in the box. Never use metal tools to remove and replace fuses.

www.EngineeringBooksPdf.com

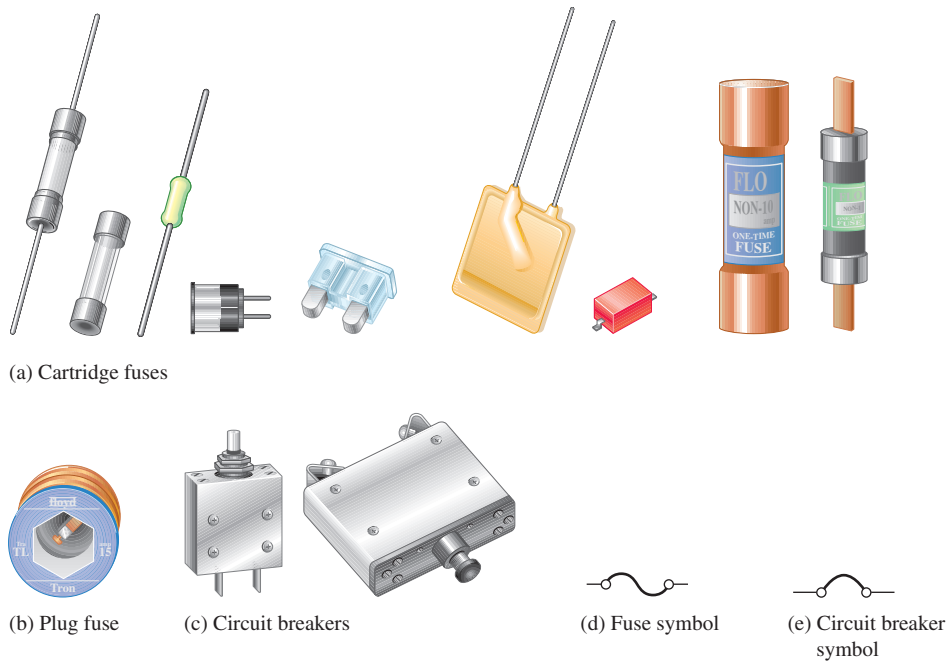

(a) Cartridge fuses

(b) Plug fuse (c) Circuit breakers (d) Fuse symbol (e) Circuit breaker symbol

▲ FIGURE 44

Typical fuses and circuit breakers and their symbols.

contact is held open by mechanical means until manually reset. In a circuit breaker based on a magnetic field, the contacts are opened by a sufficient magnetic force created by excess current and must be mechanically reset.

Wires

Wires are the most common form of conductive material used in electrical applications. They vary in diameter size and are arranged according to standard gauge numbers, called **AWG** (American Wire Gauge) sizes. As the gauge number increases, the wire diameter decreases. The size of a wire is also specified in terms of its cross-sectional area, as illustrated in Figure 45. The unit of cross-sectional area is the **circular mil,** abbreviated CM. One circular mil is the area of a wire with a diameter of 0.001 inch (0.001 in., or 1 mil). You can find the cross-sectional area in circular mils by expressing the diameter in thousandths of an inch (mils) and squaring it, as follows:

Equation 5

$$A = d^2$$

where A is the cross-sectional area in circular mils and d is the diameter in mils. Table 3 lists the AWG sizes with their corresponding cross-sectional area and resistance in ohms per 1000 ft at 20ºC.

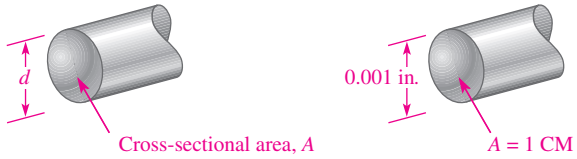

▲ FIGURE 45

Cross-sectional area of a wire.

www.EngineeringBooksPdf.com

TABLE 3

AWG (American Wire Gauge) sizes and resistances for solid round copper.

AWG #	AREA (CM)	RESISTANCE (Ω/1000 FT AT 20°C)	AWG #	AREA (CM)	RESISTANCE (Ω/1000 FT AT 20°C)
0000	211,600	0.0490	19	1,288.1	8.051
000	167,810	0.0618	20	1,021.5	10.15
00	133,080	0.0780	21	810.10	12.80
0	105,530	0.0983	22	642.40	16.14
1	83,694	0.1240	23	509.45	20.36
2	66,373	0.1563	24	404.01	25.67
3	52,634	0.1970	25	320.40	32.37
4	41,742	0.2485	26	254.10	40.81
5	33,102	0.3133	27	201.50	51.47
6	26,250	0.3951	28	159.79	64.90
7	20,816	0.4982	29	126.72	81.83
8	16,509	0.6282	30	100.50	103.2
9	13,094	0.7921	31	79.70	130.1
10	10,381	0.9989	32	63.21	164.1
11	8,234.0	1.260	33	50.13	206.9
12	6,529.0	1.588	34	39.75	260.9
13	5,178.4	2.003	35	31.52	329.0
14	4,106.8	2.525	36	25.00	414.8
15	3,256.7	3.184	37	19.83	523.1
16	2,582.9	4.016	38	15.72	659.6
17	2,048.2	5.064	39	12.47	831.8
18	1,624.3	6.385	40	9.89	1049.0

EXAMPLE 7 What is the cross-sectional area of a wire with a diameter of 0.005 inch?

Solution

$$d = 0.005 \text{ in.} = 5 \text{ mils}$$

$$A = d^2 = (5 \text{ mils})^2 = \mathbf{25\ CM}$$

Related Problem What is the cross-sectional area of a 0.0201 in. diameter wire? What is the AWG # for this wire from Table 3?

Wire Resistance Although copper wire conducts current extremely well, it still has some resistance, as do all conductors. The resistance of a wire depends on three physical characteristics: (a) type of material, (b) length of wire, and (c) cross-sectional area. In addition, temperature can also affect the resistance.

Each type of conductive material has a characteristic called its *resistivity,* which is represented by the Greek letter rho (r). For each material, r is a constant value at a given temperature. The formula for the resistance of a wire of length l and cross-sectional area A is

$$R = \frac{\rho l}{A} \qquad \text{Equation 6}$$

www.EngineeringBooksPdf.com

This formula shows that resistance increases with an increase in resistivity and length and decreases with an increase in cross-sectional area. For resistance to be calculated in ohms, the length must be in feet (ft), the cross-sectional area in circular mils (CM), and the resistivity in CM-Ω/ft.

EXAMPLE 8

Find the resistance of a 100 ft length of copper wire with a cross-sectional area of 810.1 CM. The resistivity of copper is 10.37 CM-Ω/ft at 20°C.

Solution

$$R = \frac{\rho l}{A} = \frac{(10.37\ \text{CM-}\Omega/\text{ft})\,(100\ \text{ft})}{810.1\ \text{CM}} = \mathbf{1.280\ \Omega}$$

Related Problem Use Table 3 to determine the resistance of 100 ft of copper wire with a cross-sectional area of 810.1 CM. Compare with the calculated value.

As mentioned, Table 3 lists the resistance of the various standard wire sizes in ohms per 1000 ft at 20°C. For example, a 1000 ft length of 14-gauge copper wire has a resistance of 2.525 Ω. A 1000 ft length of 22-gauge wire has a resistance of 16.14 Ω. For a given length, the smaller-gauge wire has more resistance. Thus, for a given voltage, larger-gauge wires can carry more current than smaller ones.

Ground

Ground is the reference point in an electric circuit. The term *ground* originated from the fact that one conductor of a circuit was typically connected with an 8-foot long metal rod driven into the earth itself. Today, this type of connection is referred to as an *earth ground.* In household wiring, earth ground is indicated with a green or bare copper wire. Earth ground is normally connected to the metal chassis of an appliance or a metal electrical box for safety. Unfortunately, there have been exceptions to this rule, which can present a safety hazard if a metal chassis is not at earth ground. It is a good idea to confirm that a metal chassis is actually at earth ground potential before doing any work on an instrument or appliance.

Another type of ground is called a *reference ground.* Voltages are always specified with respect to another point. If that point is not stated explicitly, the reference ground is understood. Reference ground defines 0 V for the circuit. The reference ground can be at a completely different potential than the earth ground. Reference ground is also called **common** and labeled COM or COMM because it represents a common conductor. When you are wiring a protoboard in the laboratory, you will normally reserve one of the bus strips (a long line along the length of the board) for this common conductor.

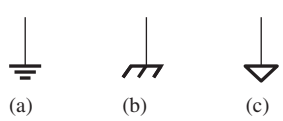

▲ FIGURE 46

Symbols for ground.

Three ground symbols are shown in Figure 46. Unfortunately, there is not a separate symbol to distinguish between earth ground and reference ground. The symbol in (a) represents either an earth ground or a reference ground, (b) shows a chassis ground, and (c) is an alternate reference symbol typically used when there is more than one common connection (such as analog and digital ground in the same circuit). In this book, the symbol in part (a) will be used throughout.

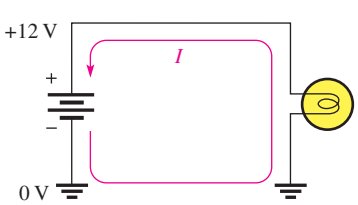

▲ FIGURE 47

A simple circuit with ground connections.

Figure 47 illustrates a simple circuit with ground connections. The current is from the negative terminal of the 12 V source, through the common ground connection, through the lamp, and through the wire back to the positive terminal of the source. Ground provides a path for the current from the source because all of the ground points are electrically the same point and provide a zero resistance (ideally) current path. The voltage at the top of the circuit is +12 V with respect to ground. You can think of all the ground points in a circuit as being connected together by a conductor.

www.EngineeringBooksPdf.com

SECTION 6 CHECKUP

1. What are the basic elements of an electric circuit?
2. Define *open circuit.*
3. Define *closed circuit.*
4. What is the resistance of an open switch? Ideally, what is the resistance of a closed switch?
5. What is the purpose of a fuse?
6. What is the difference between a fuse and a circuit breaker?
7. Which wire is larger in diameter, AWG #3 or AWG #22?
8. What is ground in an electric circuit?

7 BASIC CIRCUIT MEASUREMENTS

In working on electrical or electronic circuits, you will frequently need to measure voltage, current, and resistance and to use meters safely and correctly.

After completing this section, you should be able to

- **Make basic circuit measurements**
  - Properly measure voltage in a circuit
  - Properly measure current in a circuit
  - Properly measure resistance
  - Set up and read basic meters

Voltage, current, and resistance measurements are commonly required in electronics work. The instrument used to measure voltage is a **voltmeter**, the instrument used to measure current is an **ammeter**, and the instrument used to measure resistance is an **ohmmeter**. Commonly, all three instruments are combined into a single instrument known as a **multimeter,** in which you can choose the specific quantity to measure by selecting the appropriate function with a switch.

Typical portable multimeters are shown in Figure 48. Part (a) shows a digital multimeter (DMM), which provides a digital readout of the measured quantity; and part (b) shows an analog meter with a needle pointer. Many digital multimeters also include a bar graph display.

Meter Symbols

Throughout this text certain symbols will be used in circuits to represent meters, as shown in Figure 49. You may see any of four types of symbols for voltmeters, ammeters, and ohmmeters, depending on which symbol most effectively conveys the information required. The digital meter symbol is used when specific values are to be indicated in a circuit. The bar graph meter symbol and sometimes the analog meter symbol are used to illustrate the operation of a circuit when *relative* measurements or changes in quantities, rather than specific values, need to be depicted. A changing quantity may be indicated by an arrow in the display showing an increase or decrease. The generic symbol is used to indicate placement of meters in a circuit when no values or value changes need to be shown.

www.EngineeringBooksPdf.com

(a) Digital multimeter (b) Analog multimeter

▲ FIGURE 48

Typical portable multimeters. (a) Courtesy of Fluke Corporation. Reproduced with permission. (b) Courtesy of B+K Precision.

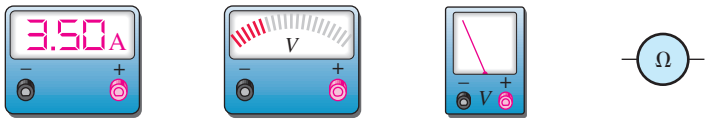

(a) Digital (b) Bar graph (c) Analog (d) Generic

▲ FIGURE 49

Examples of meter symbols used in this book. Each of the symbols can be used to represent either an ammeter (A), a voltmeter (V), or an ohmmeter (Ω).

Measuring Current

Figure 50 illustrates how to measure current with an ammeter. Part (a) shows a simple circuit in which the current through a resistor is to be measured. Connect an ammeter in the current path by first opening the circuit, as shown in part (b). Then insert the meter as shown in part (c). Such a connection is a *series* connection. The polarity of the meter must be such that the current is in at the negative terminal and out at the positive terminal.

SAFETY NOTE

Never wear rings or any type of metallic jewelry while you work on a circuit. These items may accidentally come in contact with the circuit, causing shock and/or damage to the circuit. With high-energy sources, such as a car battery, a short across jewelry (a watch or ring) can become hot instantly, causing burns to the wearer.

Measuring Voltage

To measure voltage, connect a voltmeter across the component for which the voltage is to be found. Such a connection is a *parallel* connection. The negative terminal of the meter must be connected to the negative side of the circuit, and the positive terminal of the meter must be connected to the positive side of the circuit. Figure 51 shows a voltmeter connected to measure the voltage across the resistor.

Measuring Resistance

To measure resistance, connect an ohmmeter across the resistor. *The resistor must first be removed or disconnected from the circuit.* This procedure is shown in Figure 52.

www.EngineeringBooksPdf.com

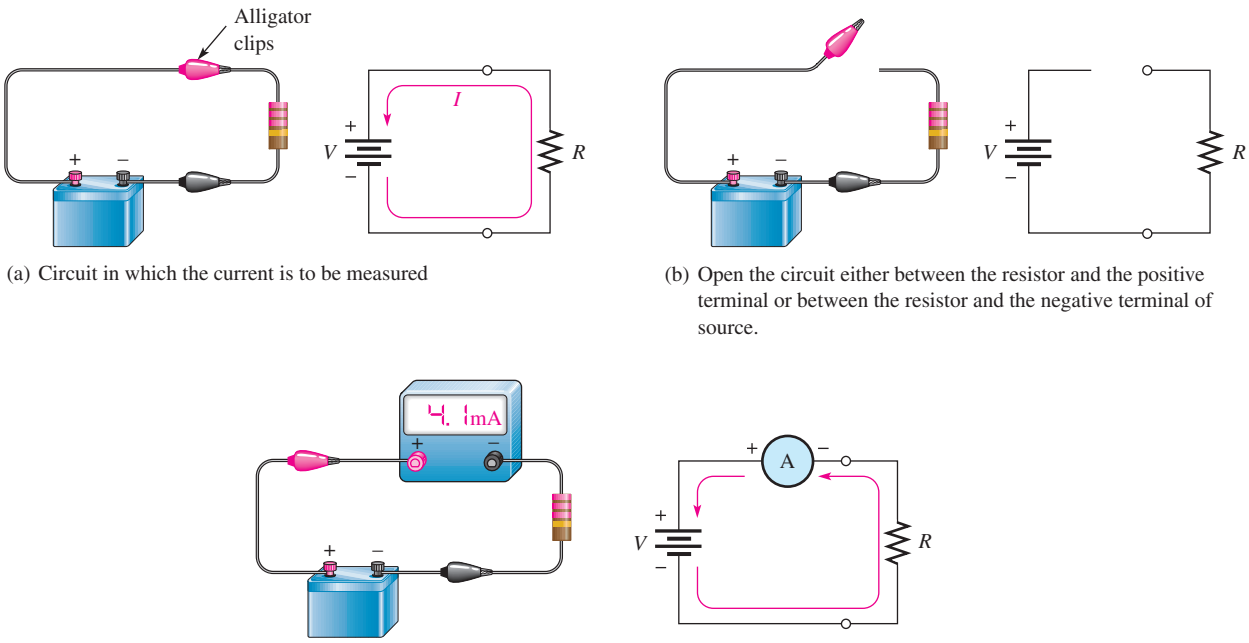

(a) Circuit in which the current is to be measured

(b) Open the circuit either between the resistor and the positive terminal or between the resistor and the negative terminal of source.

(c) Install the ammeter in the current path with polarity as shown (negative to negative, positive to positive).

▲ **FIGURE 50**

Example of an ammeter connection to measure current in a simple circuit.

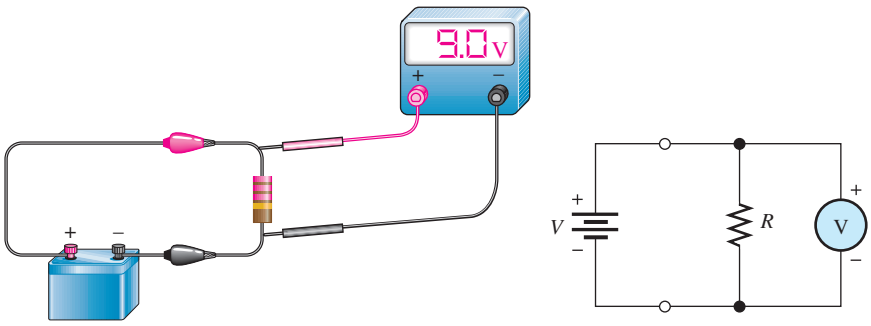

▲ **FIGURE 51**

Example of a voltmeter connection to measure voltage in a simple circuit.

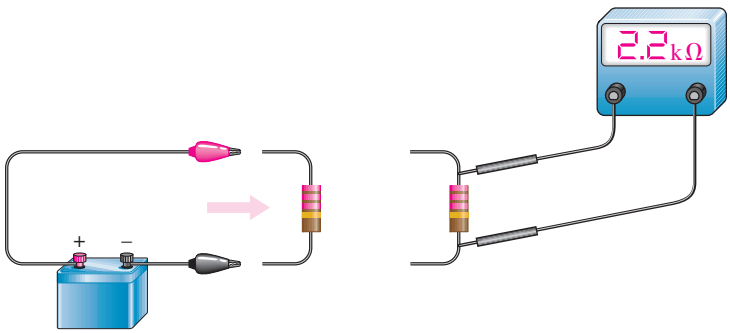

(a) Disconnect the resistor from the circuit to avoid damage to the meter and/or incorrect measurement.

(b) Measure the resistance. (Polarity is not important.)

◀ **FIGURE 52**

Example of using an ohmmeter to measure resistance.

www.EngineeringBooksPdf.com

Digital Multimeters (DMMs)

A **DMM** is a multifunction electronic instrument that can measure voltage, current, or resistance. DMMs are the most widely used type of electronic measuring instrument. Generally, DMMs provide more functions, better accuracy, greater ease of reading, and greater reliability than do analog meters, which are covered next. Analog meters have at least one advantage over DMMs, however. They can track short-term variations and trends in a measured quantity that many DMMs are too slow to respond to. Typical DMMs are shown in Figure 53. Many DMMs are autoranging types in which the proper range is automatically selected by internal circuitry.

▶ FIGURE 53

Typical digital multimeters (DMMs). (Courtesy of B+K Precision)

SAFETY NOTE

Manufacturers use the CE mark to indicate that a product meets all the essential requirements of the European Directives for health and safety. For example, DMMs that meet the directive IEC 61010-1 are in compliance and can use the CE mark on the DMM. This mark is used on many products in various countries much like the UL (underwriters lab) mark that originated in the U.S. It also shows compliance with safety standards.

DMM Functions The basic functions found on most DMMs are

- Ohms
- DC voltage and current
- AC voltage and current

Some DMMs provide additional functions such as analog bar graph displays, transistor or diode tests, power measurement, and decibel measurement for audio amplifier tests.

DMM Displays DMMs are available with either LCD (liquid-crystal display) or LED (light-emitting diode) readouts. The LCD is the most commonly used readout in battery-powered instruments because it requires only very small amounts of current. A typical battery-powered DMM with an LCD readout operates on a 9 V battery that will last from a few hundred hours to 2000 hours and more. The disadvantages of LCD readouts are that (a) they are difficult or impossible to see in low-light conditions and (b) they are relatively slow to respond to measurement changes. LEDs, on the other hand, can be seen in the dark and respond quickly to changes in measured values. LED displays require much more current than LCD displays; and, therefore, battery life is shortened when LEDs are used in portable equipment.

Both LCD and LED DMM displays are in a seven-segment format. Each digit in the display consists of seven separate segments, as shown in Figure 54(a). Each of the ten decimal digits is formed by the activation of appropriate segments, as illustrated in Figure 54(b). In addition to the seven segments, there is also a decimal point.

(a) (b)

▶ FIGURE 54

Seven-segment display.

www.EngineeringBooksPdf.com

Resolution The **resolution** of a DMM is the smallest increment of a quantity that the DMM can measure. The smaller the increment, the better the resolution. One factor that determines the resolution of a meter is the number of digits in the display.

Because many DMMs have 3½ digits in their display, we will use this case for illustration. *A* 3½ -digit multimeter has three digit positions that can indicate from 0 through 9, and one digit position that can indicate only a value of 1. This latter digit, called the *half-digit,* is always the most significant digit in the display. For example, suppose that a DMM is reading .999 V, as shown in Figure 55(a). If the voltage increases by 0.001 V to 1 V, the display correctly shows 1.000 V, as shown in part (b). The "1" is the half-digit. Thus, with 3½ digits, a variation of 0.001 V, which is the resolution, can be observed.

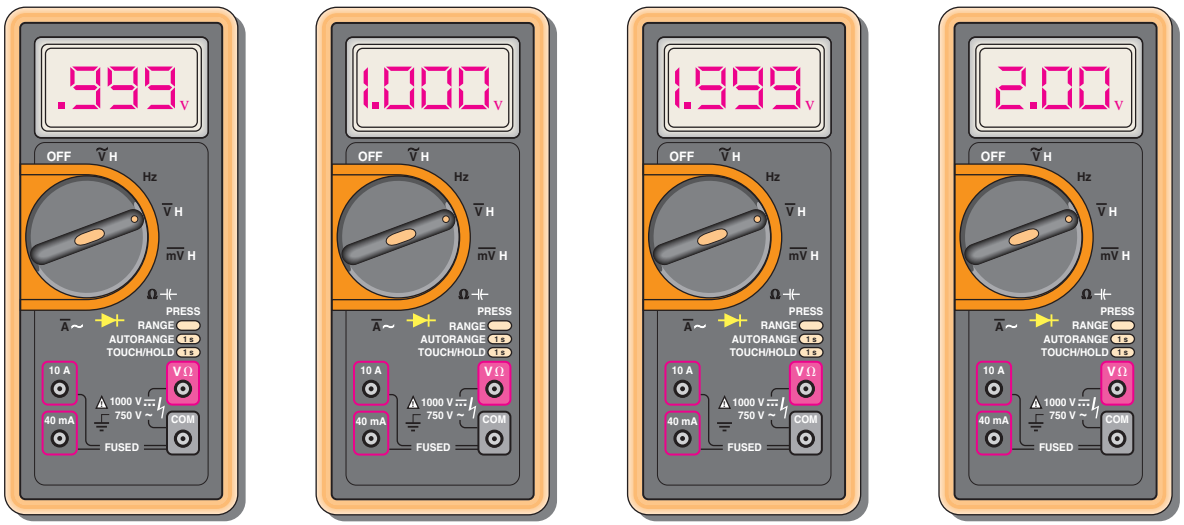

(a) Resolution: 0.001 V (b) Resolution: 0.001 V (c) Resolution: 0.001 V (d) Resolution: 0.01 V

▲ **FIGURE 55**

A 3½-digit DMM illustrates how the resolution changes with the number of digits in use.

Now, suppose that the voltage increases to 1.999 V. This value is indicated on the meter as shown in Figure 55(c). If the voltage increases by 0.001 V to 2 V, the half-digit cannot display the "2," so the display shows 2.00. The half-digit is blanked and only three digits are active, as indicated in part (d). With only three digits active, the resolution is 0.01 V rather than 0.001 V as it is with 3½ active digits. The resolution remains 0.01 V up to 19.99 V. The resolution goes to 0.1 V for readings of 20.0 V to 199.9 V. At 200 V, the resolution goes to 1 V, and so on.

The resolution capability of a DMM is also determined by the internal circuitry and the rate at which the measured quantity is sampled. DMMs with displays of 4½ through 8½ digits are also available.

Accuracy Accuracy is an indication, usually expressed in percentage, of the range of error which is the difference in the measured and true or accepted value of a quantity. The accuracy of a DMM is established strictly by its internal circuitry and calibration. For typical meters, accuracies range from 0.01% to 0.5%, with some precision laboratory-grade meters going to 0.002%.

Reading Analog Multimeters

Although the DMM is predominately used, you may have to use on analog meter on occasion.

Functions The face of a typical analog (needle-type) multimeter is represented in Figure 56. This particular instrument can be used to measure both direct current (dc) and

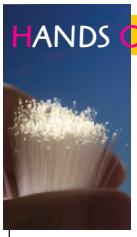

HANDS ON TIP

When reading the scales on an analog meter, always view the scale and "needle" directly from the front and not from an angle. This practice will avoid *parallax,* which is an apparent change in position of the needle relative to the meter scale and results in inaccurate readings.

www.EngineeringBooksPdf.com

▶ **FIGURE 56**

A typical analog multimeter.

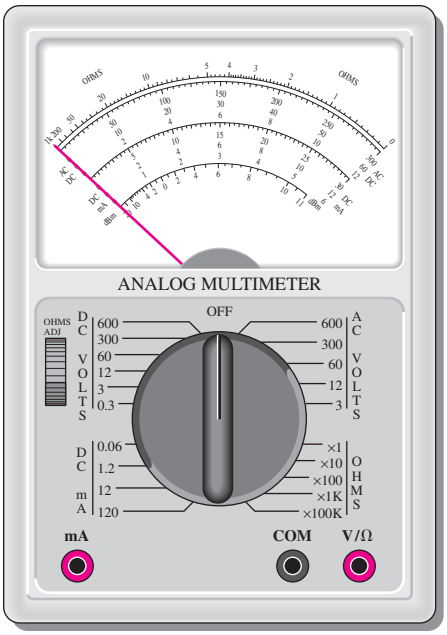

alternating current (ac) quantities as well as resistance values. It has four selectable functions: dc volts (DC VOLTS), dc milliamperes (DC mA), ac volts (AC VOLTS), and OHMS. Many analog multimeters are similar to this one, although range selections and scales may vary.

Ranges Within each function there are several ranges, as indicated by the brackets around the selector switch. For example, the DC VOLTS function has 0.3 V, 3 V, 12 V, 60 V, 300 V, and 600 V ranges. Thus, dc voltages from 0.3 V full-scale to 600 V full-scale can be measured. On the DC mA function, direct currents from 0.06 mA full-scale to 120 mA full-scale can be measured. On the ohm scale, the range settings are ×1, ×10, ×100, ×1000, and ×100,000.

The Ohm Scale Ohms are read on the top scale of the meter. This scale is nonlinear; that is, the values represented by each division (large or small) vary as you go across the scale. In Figure 56, notice how the scale becomes more compressed as you go from right to left.

To read the actual value in ohms, multiply the number on the scale as indicated by the pointer by the factor selected by the switch. For example, when the switch is set at ×100 and the pointer is at 20, the reading is $20 \times 100 = 2000\ \Omega$.

As another example, assume that the switch is at ×10 and the pointer is at the seventh small division between the 1 and 2 marks, indicating 17 Ω (1.7×10). Now, if the meter remains connected to the same resistance and the switch setting is changed to ×1, the pointer will move to the second small division between the 15 and 20 marks. This, of course, is also a 17 Ω reading, illustrating that a given resistance value can often be read at more than one switch setting. However, the meter should be *zeroed* each time the range is changed by touching the leads together and adjusting the needle.

The AC-DC and DC mA Scales The second, third, and fourth scales from the top (labeled "AC" and "DC") are used in conjunction with the DC VOLTS and AC VOLTS functions. The upper ac-dc scale ends at the 300 mark and is used with range settings such as 0.3, 3, and 300. For example, when the switch is at 3 on the DC VOLTS function, the 300 scale has a full-scale value of 3 V; at the range setting of 300, the full-scale value is 300 V. The middle ac-dc scale ends at 60. This scale is used in conjunction with range settings such as 0.06, 60, and 600. For example, when the switch is at 60 on the DC VOLTS function, the full-scale value is 60 V. The lower ac-dc scale ends at 12 and is used in conjunction with switch settings such as 1.2, 12, and 120. The three DC mA scales are used in a similar way to measure current.

HANDS ON TIP

When you are using a multimeter, such as the analog multimeter illustrated in Figure 56, where you manually select the voltage and current ranges, it is good practice to always set the multimeter on the maximum range before you measure an unknown voltage or current. You can then reduce the range until you get an acceptable reading.

www.EngineeringBooksPdf.com

EXAMPLE 9

In Figure 57, determine the quantity (voltage, current, or resistance) that is being measured and its value for each of the following specified switch settings on the meter in Figure 56.

(a) DC volts: 60 **(b)** DC mA: 12 **(c)** OHMS: ×1K

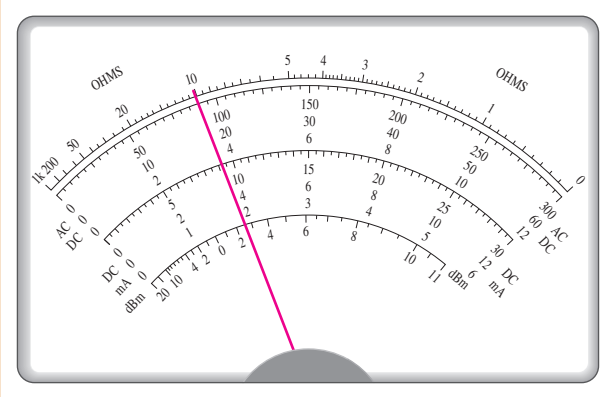

▲ FIGURE 57

Solution

(a) The reading taken from the middle AC-DC scale is **18 V**.

(b) The reading taken from the lower AC-DC scale is **3.8 mA**.

(c) The reading taken from the ohms scale (top) is **10 kΩ**.

Related Problem

For part (c) in this example, the switch is moved to the ×100 ohms setting. Assuming that the same resistance is being measured, what will the needle do?

SECTION 7 CHECKUP

1. Name the multimeter functions for measuring
   (a) current (b) voltage (c) resistance
2. Show how to place two ammeters in the circuit of Figure 40 to measure the current through either lamp (be sure to observe the polarities). How can the same measurements be accomplished with only one ammeter?
3. Show how to place a voltmeter to measure the voltage across lamp 2 in Figure 40.
4. List two common types of DMM displays, and discuss the advantages and disadvantages of each.
5. Define *resolution* in a DMM.
6. The analog multimeter in Figure 56 is set on the 3 V range to measure dc voltage. Assume the pointer is at 150 on the upper ac-dc scale. What voltage is being measured?
7. How do you set up the multimeter in Figure 56 to measure 275 V dc, and on what scale do you read the voltage?
8. If you expect to measure a resistance in excess of 20 kΩ with the multimeter in Figure 56, where do you set the switch?

www.EngineeringBooksPdf.com

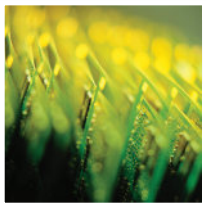

Application Assignment

PUTTING YOUR KNOWLEDGE TO WORK

A student is constructing a quiz board as part of a science fair project on batteries. The quiz board is illustrated in Figure 58. For the quiz board, a rotary switch will select one of four battery types listed. The person viewing the display selects the correct cell voltage for that battery by pressing a normally-open pushbutton next to one of the four possible answers labeled A, B, C, D. If the correct pushbutton is pressed, a "correct" light is illuminated; otherwise, nothing happens. The overall brightness of the lights is controlled by a single rheostat.

The requirements for the board can be summarized as follows:

1. As the rotary switch is moved to each position, a small light is illuminated, corresponding to one of the four battery types.
2. If the correct voltage for that battery (A, B, C, or D) is selected by pressing a pushbutton, a "correct" light is illuminated. If the wrong button is pressed, nothing happens.
3. The sequence of the correct answers is B, D, A, C for the four batteries.
4. The brightness of all bulbs can be controlled by a rheostat.

Step 1: Choosing a Circuit

Two possible circuits are shown in Figure 59. Select the circuit that meets the requirements for the quiz board. Explain why the rejected circuit will not meet the requirements. Explain the purpose of each component in the circuit.

Step 2: Developing a Materials List

Starting with the schematic you have selected, list the materials that are required to construct the quiz board. Assume the +12 V source is provided by an internal lantern battery. Don't forget materials that are not shown (such as connectors, fuse holder, etc.).

Step 3: Developing a List of Components

The blue circled points on the schematics represent nodes in the circuit. A **node** is a junction point in a circuit where two or more components meet. Develop a list of components for the circuit and a *from-to* wiring list that uses the node numbers to specify the circuit wiring.

Step 4: Determining the Current Rating of the Fuse

Specify the size of fuse required. Each lamp draws approximately 0.83 A when 12 V are applied. Based on your circuit, choose a fuse that is most appropriate. Fuse sizes available are 1 A, 2 A, 3 A, 5 A, and 10 A. Explain your choice.

▶ FIGURE 58

Quiz board.

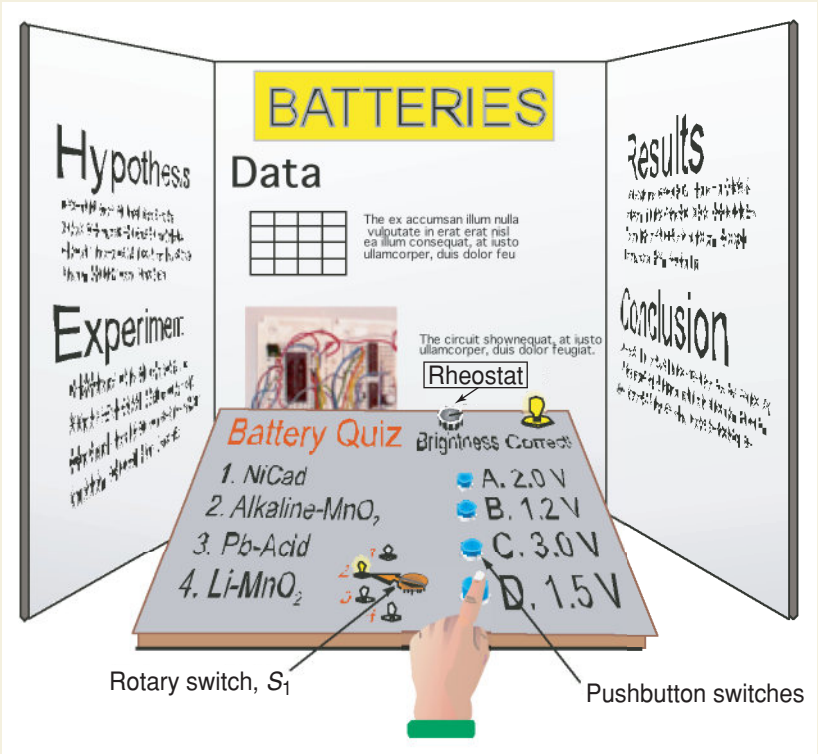

www.EngineeringBooksPdf.com

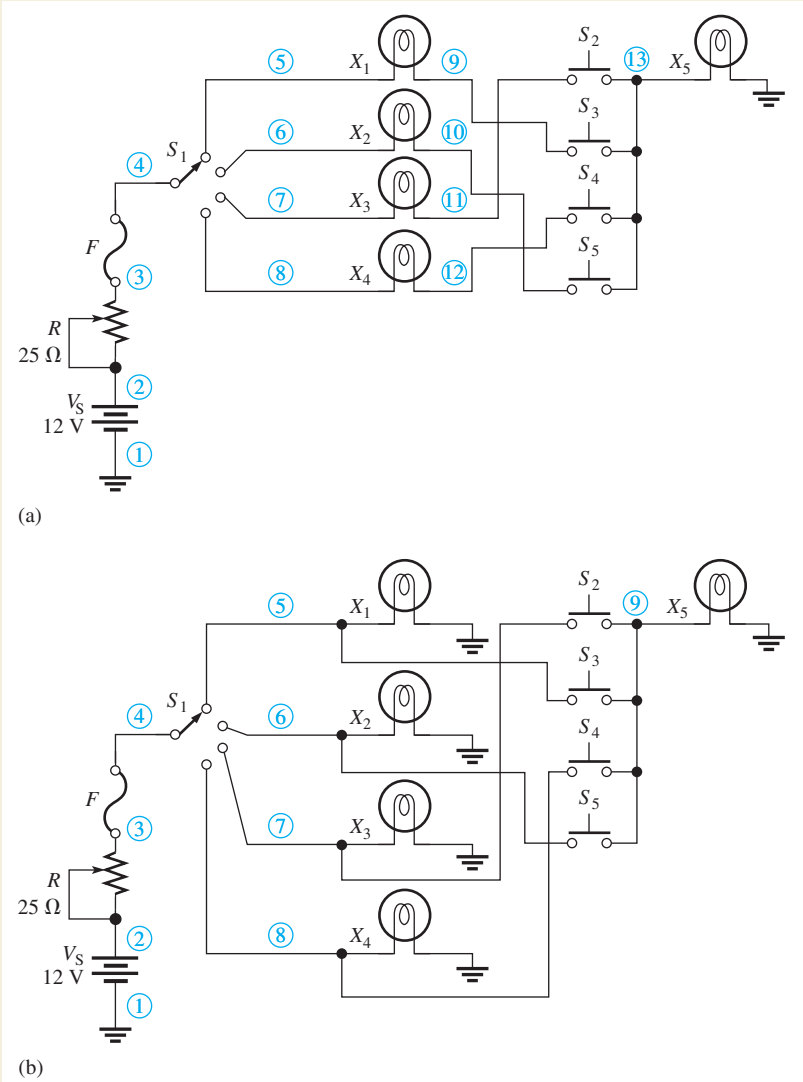

▲ FIGURE 59

Step 5: Troubleshooting the Circuit

Troubleshoot the circuit. For each of the following cases where the circuit is not working correctly, specify the possible faults and how you would troubleshoot the circuit to find the problem. There is more than one possible fault for most problems.

- The rotary switch selects question 1, but the light does not turn on. Other lights work when they are selected.
- None of the lights will turn on.
- The correct answer light never is on, no matter what combination of question or answer is selected.
- All lights are too dim when selected.

Step 6: Simulating the Circuit

Open Multisim file AA-CH02 in the System Application folder; file is found at www.pearsonhighered.com/floyd/. The file has all of the components you need to complete the circuit. Complete the wiring of the circuit using the schematic you selected as a guide. After completing the wiring, run the simulation and verify that it meets the requirements. (*Note:* Multisim will not show the effect of the rheostat. Also, the pushbutton switches should be pressed to close and pressed again to open.)

Review

1. How would you modify the circuit to change the correct answer sequence?

www.EngineeringBooksPdf.com

SUMMARY

- An atom is the smallest particle of an element that retains the characteristics of that element.
- The electron is the basic particle of negative electrical charge.
- The proton is the basic particle of positive charge.
- An ion is an atom that has gained or lost an electron and is no longer neutral.
- When electrons in the outer orbit of an atom (valence electrons) break away, they become free electrons.
- Free electrons make current possible.
- Like charges repel each other, and opposite charges attract each other.
- Voltage must be applied to a circuit before there can be current.
- Fuel cells and batteries convert chemical energy to electrical energy using oxidation-reduction reaction.
- Resistance limits the current.
- Basically, an electric circuit consists of a source, a load, and a current path.
- An open circuit is one in which the current path is broken.
- A closed circuit is one which has a complete current path.
- An ammeter is connected in line (series) with the current path to measure current.
- A voltmeter is connected across (parallel) the current path to measure voltage.
- An ohmmeter is connected across a resistor to measure resistance. The resistor must be disconnected from the circuit.
- Figure 60 shows the electrical symbols introduced in this chapter.

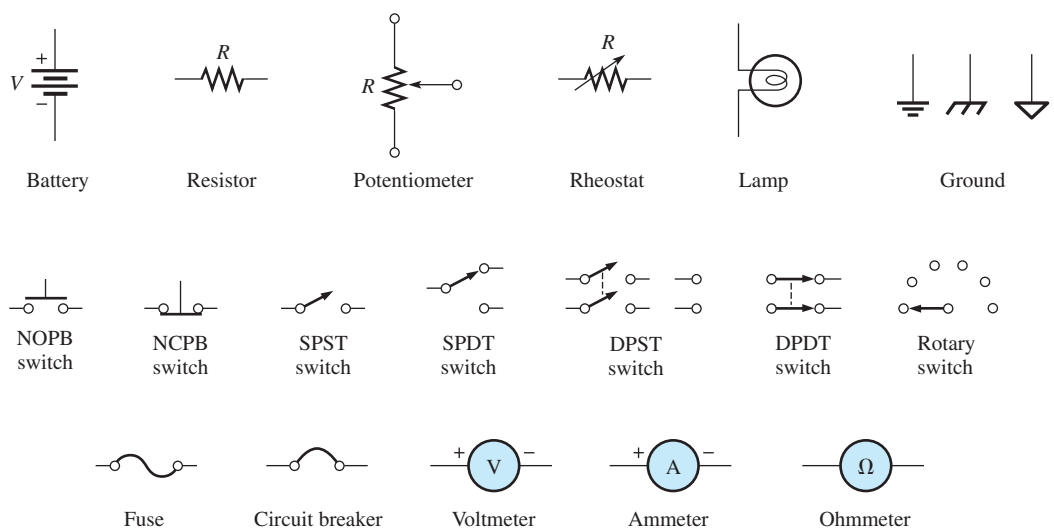

▲ FIGURE 60

- One coulomb is the charge on 6.25×10^{18} electrons.
- One volt is the potential difference (voltage) between two points when one joule of energy is used to move one coulomb of charge from one point to the other.
- One ampere is the amount of current that exists when one coulomb of charge moves through a given cross-sectional area of a material in one second.
- One ohm is the resistance when there is one ampere of current in a material with one volt applied across the material.

www.EngineeringBooksPdf.com

KEY TERMS

Ammeter An electrical instrument used to measure current.

Ampere (A) The unit of electrical current.

Atom The smallest particle of an element possessing the unique characteristics of that element.

AWG American Wire Gauge; a standardization based on wire diameter.

Charge An electrical property of matter that exists because of an excess or a deficiency of electrons. Charge can be either positive or negative.

Circuit An interconnection of electrical components designed to produce a desired result. A basic circuit consists of a source, a load, and an interconnecting current path.

Circuit breaker A resettable protective device used for interrupting excessive current in an electric circuit.

Closed circuit A circuit with a complete current path.

Conductance The ability of a circuit to allow current. The unit is the siemens (S).

Conductor A material in which electric current is easily established. An example is copper.

Coulomb (C) The unit of electrical charge; the total charge possessed by 6.25×10^{18} electrons.

Coulomb's law A law that states a force exists between two charged bodies that is directly proportional to the product of the two charges and inversely proportional to the square of the distance between them.

Current The rate of flow of charge (free electrons).

Current source A device that produces a constant current for a varying load.

DMM Digital multimeter; an electronic instrument that combines meters for measurement of voltage, current, and resistance.

Electron A basic particle of electrical charge in matter. The electron possesses negative charge.

Free electron A valence electron that has broken away from its parent atom and is free to move from atom to atom within the atomic structure of a material.

Fuel cell A device that converts electrochemical energy from an external source into dc voltage. The hydrogen fuel cell is the most common type.

Fuse A protective device that burns open when there is excessive current in a circuit.

Ground The common or reference point in a circuit.

Insulator A material that does not allow current under normal conditions.

Load An element (resistor or other component) connected across the output terminals of a circuit that draws current from the source and upon which work is done.

Ohm (Ω) The unit of resistance.

Ohmmeter An instrument for measuring resistance.

Open circuit A circuit in which there is not a complete current path.

Potentiometer A three-terminal variable resistor.

Resistance Opposition to current. The unit is the ohm (Ω).

Resistor An electrical component designed specifically to have a certain amount of resistance.

Rheostat A two-terminal variable resistor.

Schematic A symbolized diagram of an electrical or electronic circuit.

Semiconductor A material that has a conductance value between that of a conductor and an insulator. Silicon and germanium are examples.

Siemens (S) The unit of conductance.

Switch An electrical or electronic device for opening and closing a current path.

Volt (V) The unit of voltage or electromotive force.

Voltage The amount of energy per charge available to move electrons from one point to another in an electric circuit.

Voltage source A device that produces a constant voltage for a varying load.

Voltmeter An instrument used to measure voltage.

www.EngineeringBooksPdf.com

FORMULAS

1	$Q = \dfrac{\text{number of electrons}}{6.25 \times 10^{18}\ \text{electrons/C}}$	Charge
2	$V = \dfrac{W}{Q}$	Voltage in volts equals energy in joules divided by charge in coulombs.
3	$I = \dfrac{Q}{t}$	Current in amperes equals charge in coulombs divided by time in seconds.
4	$G = \dfrac{1}{R}$	Conductance in siemens is the reciprocal of resistance in ohms.
5	$A = d^2$	Cross-sectional area in circular mils equals the diameter in mils squared.
6	$R = \dfrac{\rho l}{A}$	Resistance is resistivity in CM Ω/ft times length in feet divided by cross-sectional area in circular mils.

TRUE/FALSE QUIZ

Answers are at the end of the chapter.

1. The number of neutrons in the nucleus is the atomic number of that element.
2. The unit of charge is the ampere.
3. Energy in a battery is stored in the form of chemical energy.
4. A volt can be defined in terms of energy per charge.
5. In a five-band precision resistor, the fourth band is the tolerance band.
6. A rheostat performs the same function as a potentiometer.
7. A strain gauge changes resistance in response to an applied force.
8. All circuits must have a complete path for current.
9. A circular mil is a unit of area.
10. The three basic measurements that can be done by a DMM are voltage, current, and power.

SELF-TEST

Answers are at the end of the chapter.

1. A neutral atom with an atomic number of three has how many electrons?
   (a) 1 **(b)** 3 **(c)** none **(d)** depends on the type of atom
2. Electron orbits are called
   (a) shells **(b)** nuclei **(c)** waves **(d)** valences
3. Materials in which current cannot be established are called
   (a) filters **(b)** conductors **(c)** insulators **(d)** semiconductors
4. When placed close together, a positively charged material and a negatively charged material will
   (a) repel **(b)** become neutral **(c)** attract **(d)** exchange charges
5. The charge on a single electron is
   (a) 6.25×10^{-18} C **(b)** 1.6×10^{-19} C **(c)** 1.6×10^{-19} J **(d)** 3.14×10^{-6} C
6. *Potential difference* is another term for
   (a) energy **(b)** voltage **(c)** distance of an electron from the nucleus **(d)** charge
7. The unit of energy is the
   (a) watt **(b)** coulomb **(c)** joule **(d)** volt
8. Which one of the following is not a type of energy source?
   (a) battery **(b)** solar cell **(c)** generator **(d)** potentiometer

www.EngineeringBooksPdf.com

9. Which one of the following is the byproduct of a hydrogen fuel cell?
   (a) oxygen **(b)** carbon dioxide **(c)** hydrochloric acid **(d)** water
10. Which one of the following is generally not a possible condition in an electric circuit?
   (a) voltage and no current **(b)** current and no voltage
   (c) voltage and current **(d)** no voltage and no current
11. Electrical current is defined as
   (a) free electrons **(b)** the rate of flow of free electrons
   (c) the energy required to move electrons **(d)** the charge on free electrons
12. There is no current in a circuit when
   (a) a series switch is closed **(b)** a series switch is open **(c)** there is no source voltage
   (d) both (a) and (c) **(e)** both (b) and (c)
13. The primary purpose of a resistor is to
   (a) increase current **(b)** limit current **(c)** produce heat **(d)** resist current change
14. Potentiometers and rheostats are types of
   (a) voltage sources **(b)** variable resistors **(c)** fixed resistors **(d)** circuit breakers
15. The current in a given circuit is not to exceed 22 A. Which value of fuse is best?
   (a) 10 A **(b)** 25 A **(c)** 20 A **(d)** a fuse is not necessary

PROBLEMS

Answers to odd-numbered problems are at the end of the chapter.

BASIC PROBLEMS

SECTION 2 Electrical Charge

1. How many coulombs of charge do 50×10^{31} electrons possess?
2. How many electrons does it take to make 80 μC of charge?
3. What is the charge in coulombs of the nucleus of a copper atom?
4. What is the charge in coulombs of the nucleus of a chlorine atom?

SECTION 3 Voltage

5. Determine the voltage in each of the following cases:
   (a) 10 J/C **(b)** 5 J/2 C **(c)** 100 J/25 C
6. Five hundred joules of energy are used to move 100 C of charge through a resistor. What is the voltage across the resistor?
7. What is the voltage of a battery that uses 800 J of energy to move 40 C of charge through a resistor?
8. How much energy does a 12 V battery in your car use to move 2.5 C through the electrical circuit?
9. Assume that a solar battery charger delivers 2.5 J of energy when 0.2 C of charge has been moved. What is the voltage?

SECTION 4 Current

10. If the solar cell in Problem 9 has moved the charge in 10 s, what is the current?
11. Determine the current in each of the following cases:
   (a) 75 C in 1 s **(b)** 10 C in 0.5 s **(c)** 5 C in 2 s
12. Six-tenths coulomb passes a point in 3 s. What is the current in amperes?
13. How long does it take 10 C to flow past a point if the current is 5 A?
14. How many coulombs pass a point in 0.1 s when the current is 1.5 A?

www.EngineeringBooksPdf.com

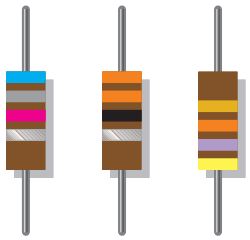

(a)

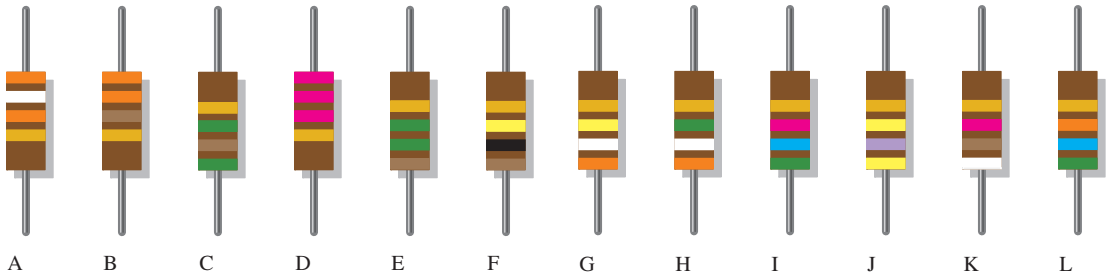

(b)

▲ FIGURE 61

SECTION 5 Resistance

15. Figure 61(a) shows color-coded resistors. Determine the resistance value and the tolerance of each.

16. Find the minimum and the maximum resistance within the tolerance limits for each resistor in Figure 61(a).

17. **(a)** If you need a 270 Ω resistor with 5% tolerance, what color bands should you look for?

(b) From the selection of resistors in Figure 61(b), choose the following values: 330 Ω, 2.2 kΩ, 39 kΩ, 56 kΩ, and 100 kΩ.

18. Determine the resistance value and tolerance for each resistor in Figure 62.

▶ FIGURE 62

(a) (b) (c)

19. Determine the resistance and tolerance of each of the following 4-band resistors:

(a) brown, black, black, gold **(b)** green, brown, green, silver

(c) blue, gray, black, gold

20. Determine the color bands for each of the following 4-band resistors. Assume each has a 5% tolerance.

(a) 0.47 Ω **(b)** 270 kΩ **(c)** 5.1 MΩ

21. Determine the resistance and tolerance of each of the following 5-band resistors:

(a) red, gray, violet, red, brown

(b) blue, black, yellow, gold, brown

(c) white, orange, brown, brown, brown

22. Determine the color bands for each of the following 5-band resistors. Assume each has a 1% tolerance.

(a) 14.7 kΩ **(b)** 39.2 Ω **(c)** 9.76 kΩ

www.EngineeringBooksPdf.com

23. Determine the resistance values represented by the following labels:

(a) 220 **(b)** 472 **(c)** 823 **(d)** 3K3 **(e)** 560 **(f)** 10M

24. The adjustable contact of a linear potentiometer is set at the mechanical center of its adjustment. If the total resistance is 1000 Ω, what is the resistance between each end terminal and the adjustable contact?

SECTION 6 The Electric Circuit

25. Trace the current path in the lamp circuit of Figure 40(a) with the switch making contact between the middle and lower pins.

26. With the switch in either position, redraw the lamp circuit in Figure 40(b) with a fuse connected to protect the circuit against excessive current.

SECTION 7 Basic Circuit Measurements

27. Show the placement of an ammeter and a voltmeter to measure the current and the source voltage in Figure 63.

28. Show how you would measure the resistance of R_2 in Figure 63.

29. In Figure 64 what does each voltmeter indicate when the switch (SW) is in position 1? In position 2?

30. In Figure 64, show how to connect an ammeter to measure the current from the voltage source regardless of the switch (SW) position.

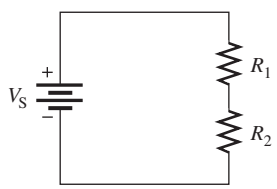

▲ FIGURE 63

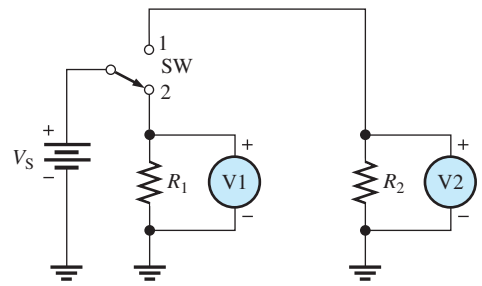

▲ FIGURE 64

31. What is the voltage reading of the meter in Figure 65?

▶ FIGURE 65

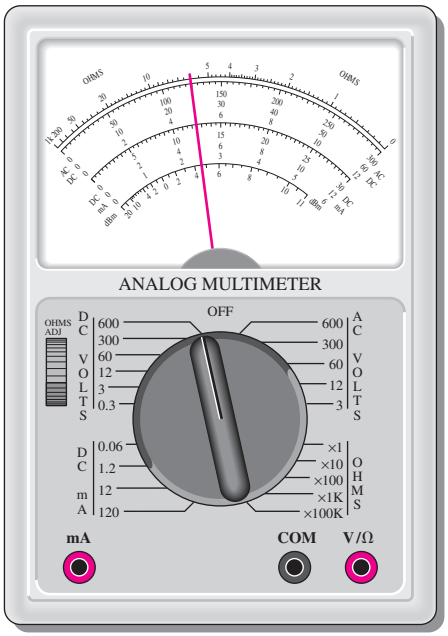

www.EngineeringBooksPdf.com

32. How much resistance is the meter in Figure 66 measuring?

▶ **FIGURE 66**

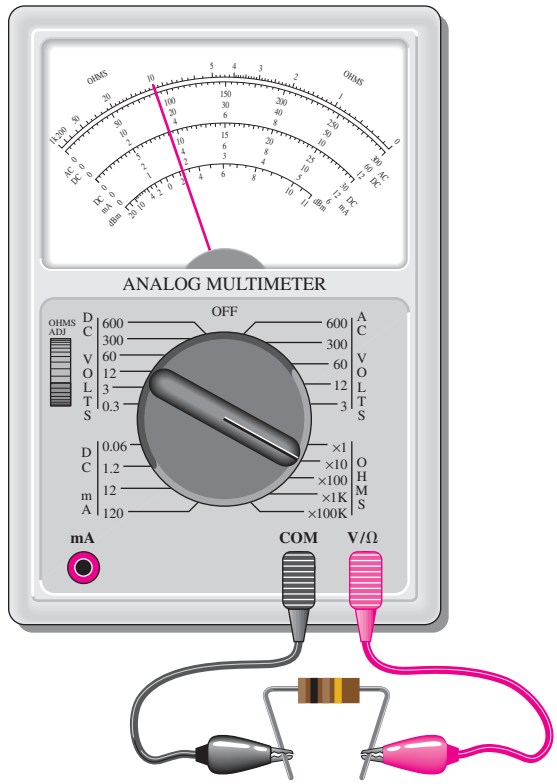

33. Determine the resistance indicated by each of the following ohmmeter readings and range settings:

(a) pointer at 2, range setting at R × 100

(b) pointer at 15, range setting at R × 10M

(c) pointer at 45, range setting at R × 100

34. A multimeter has the following ranges: 1 mA, 10 mA, 100 mA; 100 mV, 1 V, 10 V; R × 1, R × 10, R × 100. Indicate schematically how you would connect the multimeter in Figure 67 to measure the following quantities:

(a) I_{R1} **(b)** V_{R1} **(c)** R_1

In each case indicate the *function* to which you would set the meter and the *range* that you would use.

▶ **FIGURE 67**

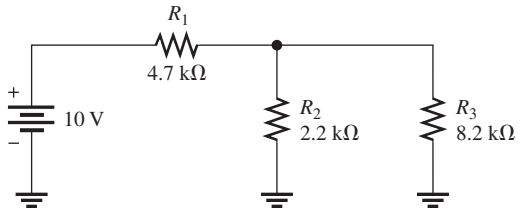

ADVANCED PROBLEMS

35. A resistor with a current of 2 A through it in an amplifier circuit converts 1000 J of electrical energy to heat energy in 15 s. What is the voltage across the resistor?

36. If 574×10^{15} electrons flow through a speaker wire in 250 ms, what is the current in amperes?

www.EngineeringBooksPdf.com

37. A 120 V source is to be connected to a 1500 Ω resistive load by two lengths of wire as shown in Figure 68. The voltage source is to be located 50 ft from the load. Using Table 3, determine the gauge number of the *smallest* wire that can be used if the total resistance of the two lengths of wire is not to exceed 6 Ω.

▶ FIGURE 68

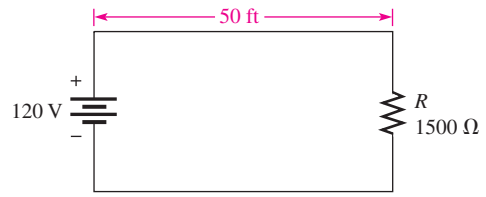

38. Determine the resistance and tolerance of each resistor labeled as follows:

(a) 4R7J **(b)** 560KF **(c)** 1M5G

39. There is only one circuit in Figure 69 in which it is possible to have all lamps on at the same time. Determine which circuit it is.

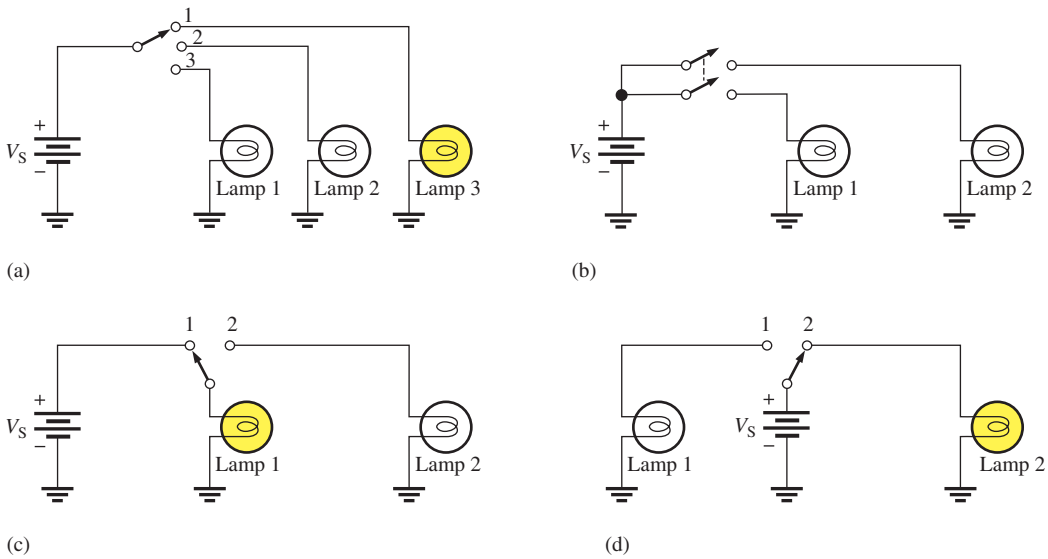

▲ FIGURE 69

40. Through which resistor in Figure 70 is there always current, regardless of the position of the switches?

▶ FIGURE 70

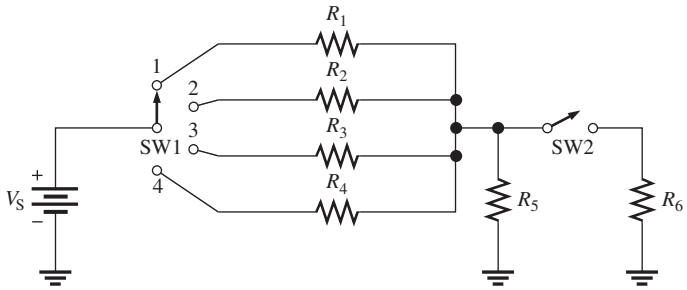

www.EngineeringBooksPdf.com

41. In Figure 70, show the proper placement of ammeters to measure the current through each resistor and the current out of the battery.

42. Show the proper placement of voltmeters to measure the voltage across each resistor in Figure 70.

43. Devise a switch arrangement whereby two voltage sources V_{S1} and V_{S2} can be connected simultaneously to either of two resistors (R_1 and R_2) as follows:

V_{S1} connected to R_1 and V_{S2} connected to R_2

V_{S1} connected to R_2 and V_{S2} connected to R_1

ANSWERS

SECTION CHECKUPS

SECTION 1 Atoms

1. The electron is the basic particle of negative charge.
2. An atom is the smallest particle of an element that retains the unique characteristics of the element.
3. An atom is a positively charged nucleus surrounded by orbiting electrons.
4. Atomic number is the number of protons in a nucleus.
5. No, each element has a different type of atom.
6. A free electron is an outer-shell electron that has drifted away from the parent atom.
7. Shells are energy bands in which electrons orbit the nucleus of an atom.
8. Copper and silver

SECTION 2 Electrical Charge

1. Q is the symbol for charge.
2. Coulomb is the unit of charge, and C is the symbol for coulomb.
3. The two types of charge are positive and negative.
4. $Q = \dfrac{10 \times 10^{12}\ \text{electrons}}{6.25 \times 10^{18}\ \text{electrons/C}} = 1.6 \times 10^{-6}\ \text{C} = 1.6\ \mu\text{C}$

SECTION 3 Voltage

1. Voltage is energy per unit charge.
2. The unit of voltage is the volt.
3. $V = W/Q = 24\ \text{J}/10\ \text{C} = 2.4\ \text{V}$
4. Battery, fuel cell, power supply, solar cell, generator, thermocouple, and piezoelectric sensors are voltage sources.
5. Oxidation-reduction reactions

SECTION 4 Current

1. Current is the rate of flow of charge; **the** unit of current is the ampere (A).
2. There are 6.25×10^{18} electrons in one coulomb.
3. $I = Q/t = 20\ \text{C}/4\ \text{s} = 5\ \text{A}$

SECTION 5 Resistance

1. Resistance is opposition to current and its unit is the ohm (Ω).
2. Two resistor categories are fixed and variable. The value of a fixed resistor cannot be changed, but that of a variable resistor can.
3. *First band:* first digit of resistance value.

   Second band: second digit of resistance value.

www.EngineeringBooksPdf.com

Third band: number of zeros following the 2nd digit.

Fourth band: percent tolerance.

4. **(a)** Yellow, violet, red, gold = 4700 Ω ± 5%
   (b) Blue, red, orange, silver = 62,000 Ω ± 10%
   (c) Brown, gray, black, gold = 18 Ω ± 5%
   (d) Red, red, blue, red, green = 22.6 kΩ ± 0.5%
5. **(a)** 33R = 33 Ω
   (b) 5K6 = 5.6 kΩ
   (c) 900 = 900 Ω
   (d) 6M8 = 6.8 MΩ
6. A rheostat has two terminals; a potentiometer has three terminals.
7. Thermistor—temperature; photoconductor cell—light; strain gauge—force.

SECTION 6 The Electric Circuit

1. A basic electric circuit consists of source, load, and current path between source and load.
2. An open circuit is one that has no path for current.
3. A closed circuit is one that has a complete path for current.
4. $R = \infty$ (infinite); $R = 0\ \Omega$
5. A fuse protects a circuit against excessive current.
6. A fuse must be replaced once blown. A circuit breaker can be reset once tripped.
7. AWG #3 is larger than AWG #22.
8. Ground is the reference point with zero voltage with respect to other points.

SECTION 7 Basic Circuit Measurements

1. **(a)** Ammeter measures current.
   (b) Voltmeter measures voltage.
   (c) Ohmmeter measures resistance.
2. See Figure 71.
3. See Figure 72.

▶ FIGURE 71

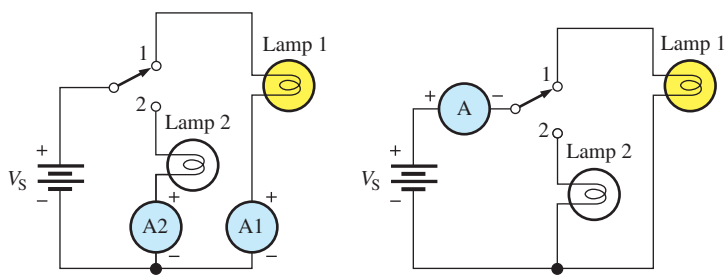

(a) Two ammeters (b) One ammeter

▶ FIGURE 72

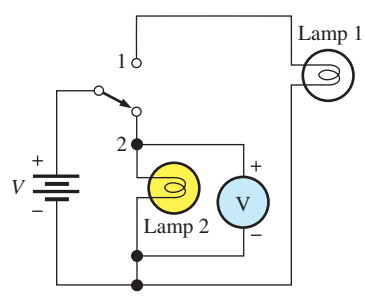

www.EngineeringBooksPdf.com

4. Two types of DMM displays are LED and LCD. The LCD requires little current, but it is difficult to see in low light and is slow to respond. The LED can be seen in the dark, and it responds quickly; however, it requires much more current than does the LCD.
5. Resolution is the smallest increment of a quantity that a meter can measure.
6. The voltage being measured is 1.5 V.
7. DC VOLTS, 600 setting; 275 V is read on the 60 scale near midpoint.
8. OHMS × 1000

RELATED PROBLEMS FOR EXAMPLES

1 1.88×10^{19} electrons
2 600 J
3 12 C
4 4700 Ω ± 5%
5 47.5 Ω ± 2%
6 1.25 kΩ
7 404.01 CM; #24
8 1.280 Ω; same as calculated result
9 The needle will indicate 100 on the top scale.

TRUE/FALSE QUIZ

1. F **2.** F **3.** T **4.** T **5.** F **6.** F **7.** T **8.** T **9.** T **10.** F

SELF-TEST

1. (b) **2.** (a) **3.** (c) **4.** (c) **5.** (b) **6.** (b) **7.** (c) **8.** (d)
9. (d) **10.** (b) **11.** (b) **12.** (e) **13.** (b) **14.** (b) **15.** (c)

PROBLEMS – ODD-NUMBERED ANSWERS

1. 80×10^{12} C
3. 4.64×10^{-18} C
5. **(a)** 10 V **(b)** 2.5 V **(c)** 4 V
7. 20 V
9. 12.5 V
11. **(a)** 75 A **(b)** 20 A **(c)** 2.5 A
13. 2 s
15. A: 6800 Ω ± 10%
B: 33 Ω ± 10%
C: 47,000 Ω ± 5%
17. **(a)** Red, violet, brown, gold
(b) B: 330 Ω, D: 2.2 kΩ, A: 39 kΩ, L: 56 kΩ, F: 100 kΩ
19. **(a)** 10 Ω ± 5%
(b) 5.1 MΩ ± 10%
(c) 68 Ω ± 5%
21. **(a)** 28.7 kΩ ± 1%
(b) 60.4 Ω ± 1%
(c) 9.31 kΩ ± 1%
23. **(a)** 22 Ω **(b)** 4.7 kΩ **(c)** 82 kΩ
(d) 3.3 kΩ **(e)** 56 Ω **(f)** 10 MΩ
25. There is current through lamp 2.

www.EngineeringBooksPdf.com

27. Ammeter in series with resistors, with its negative terminal to the negative terminal of source and its positive terminal to one side of R_1. Voltmeter placed across (in parallel with) the source (negative to negative, positive to positive).

29. Position 1: V1 = 0, V2 = V_S

Position 2: V1 = V_S, V2 = 0

31. 250 V

33. **(a)** 200 Ω **(b)** 150 MΩ **(c)** 4500 Ω

35. 33.3 V

37. AWG #27

39. Circuit (b)

41. One ammeter in series with battery. One ammeter in series with each resistor (seven total).

43. See Figure P–1.

▶ FIGURE P–1

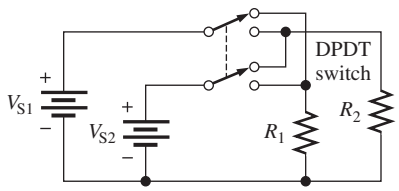

PHOTO CREDITS FOR REOCCURRING IMAGES

CD Icon: Stockbyte/Getty Images; **Computer Chips:** Photodisc/Thinkstock; **Computer:** Jeff Maloney/Photodisc/Getty Images; **Fiber Optic:** discpicture/Shutterstock.

www.EngineeringBooksPdf.com

This page intentionally left blank

www.EngineeringBooksPdf.com

Ohm's Law, Energy, and Power

CHAPTER OUTLINE

1 Ohm's Law
2 Application of Ohm's Law
3 Energy and Power
4 Power in an Electric Circuit
5 The Power Rating of Resistors
6 Energy Conversion and Voltage Drop in a Resistance
7 Power Supplies and Batteries
8 Introduction to Troubleshooting
Application Assignment: Putting Your Knowledge to Work

CHAPTER OBJECTIVES

- Explain Ohm's law
- Use Ohm's law to determine voltage, current, or resistance
- Define *energy* and *power*
- Calculate power in a circuit
- Properly select resistors based on power consideration
- Explain energy conversion and voltage drop
- Discuss characteristics of power supplies and batteries
- Describe a basic approach to troubleshooting

KEY TERMS

- Ohm's law
- Linear
- Energy
- Power
- Joule (J)
- Watt (W)
- Kilowatt-hour (kWh)
- Watt's law
- Power rating
- Voltage drop
- Power supply
- Efficiency
- Ah rating
- Troubleshooting
- Half-splitting

APPLICATION ASSIGNMENT PREVIEW

You are assigned the task of specifying parts and building a new resistance substitution box. The box is designed to allow a bench technician to select from a group of standard resistors for use in circuits with up to 5.0 V input. After specifying the parts and calculating the cost of the project, you will draw a schematic and develop a test procedure. To complete the assignment, you will

1. Determine the wattage rating for the resistors.
2. Develop a materials list and estimate the total cost of the project.
3. Draw the schematic for the resistor box.
4. Develop a test procedure.
5. Troubleshoot the circuit.

After studying this chapter, you should be able to complete the application assignment.

VISIT THE COMPANION WEBSITE

Study aids for this chapter are available at http://www.pearsonhighered.com/floyd/

INTRODUCTION

Georg Simon Ohm (1787–1854) experimentally found that voltage, current, and resistance are all related in a specific way. This basic relationship, known as *Ohm's law,* is one of the most fundamental and important laws in the fields of electricity and electronics. In this chapter, Ohm's law is examined, and its use in practical circuit applications is discussed and demonstrated by numerous examples.

In addition to Ohm's law, the concepts and definitions of energy and power in electric circuits are introduced and the Watt's law power formulas are given. A general approach to troubleshooting using the analysis, planning, and measurement (APM) method is also introduced.

Streeter Photography/Alamy

From Chapter 3 of *Electronics Fundamentals: Circuits, Devices, and Applications*, Eighth Edition, Thomas L. Floyd, David M. Buchla. Copyright © 2010 by Pearson Education, Inc. Published by Pearson Prentice Hall. All rights reserved.

www.EngineeringBooksPdf.com

1 OHM'S LAW

Ohm's law describes mathematically how voltage, current, and resistance in a circuit are related. Ohm's law can be written in three equivalent forms; the formula you use depends on the quantity you need to determine.

After completing this section, you should be able to

- **Explain Ohm's law**
  - Describe how voltage (V), current (I), and resistance (R) are related
  - Express I as a function of V and R
  - Express V as a function of I and R
  - Express R as a function of V and I

Ohm determined experimentally that if the voltage across a resistor is increased, the current through the resistor will increase; and, likewise, if the voltage is decreased, the current will decrease. For example, if the voltage is doubled, the current will double. If the voltage is halved, the current will also be halved. This relationship is illustrated in Figure 1, with relative meter indications of voltage and current.

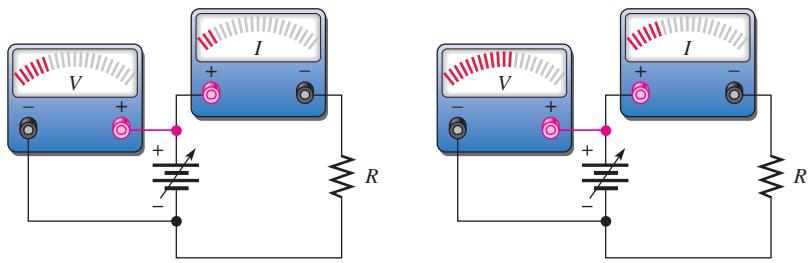

(a) Less V, less I (b) More V, more I

▲ **FIGURE 1**

Effect on the current of changing the voltage with the resistance at a constant value.

Ohm also determined that if the voltage is held constant, less resistance results in more current, and more resistance results in less current. For example, if the resistance is halved, the current doubles. If the resistance is doubled, the current is halved. This concept is illustrated by the meter indications in Figure 2, where the resistance is increased and the voltage is held constant.

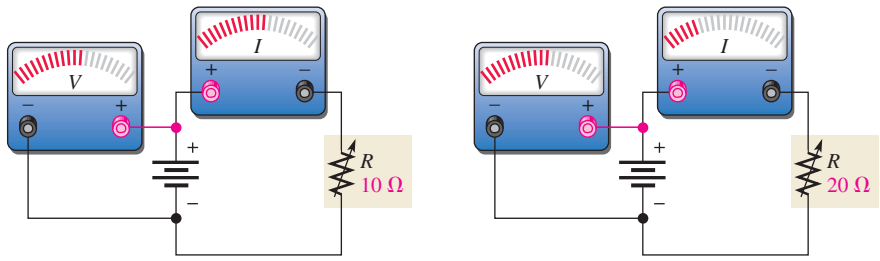

(a) Less R, more I (b) More R, less I

▲ **FIGURE 2**

Effect on the current of changing the resistance with the voltage at a constant value.

This icon indicates selected websites for further information on topics in this section. See the Companion Website provided with this text.

www.EngineeringBooksPdf.com

Ohm's law states that current is directly proportional to voltage and inversely proportional to resistance.

$$I = \frac{V}{R} \qquad \text{Equation 1}$$

where I is current in amperes (A), V is voltage in volts (V), and R is resistance in ohms (Ω). This formula describes the relationship illustrated by the action in the circuits of Figures 1 and 2.

For a constant resistance, if the voltage applied to a circuit is increased, the current will increase; and if the voltage is decreased, the current will decrease.

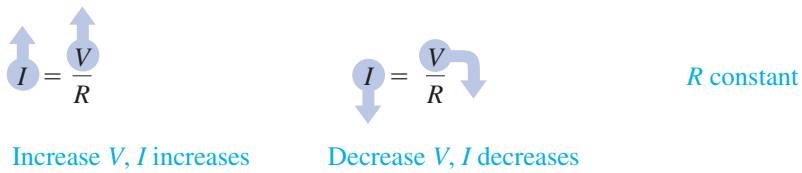

For a constant voltage, if the resistance in a circuit is increased, the current will decrease; and if the resistance is decreased, the current will increase.

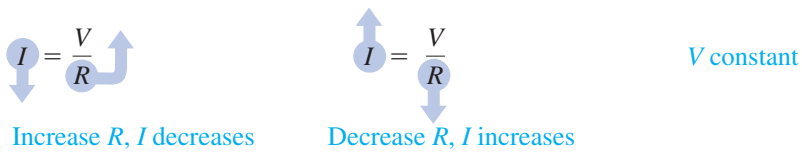

EXAMPLE 1

Using the Ohm's law formula in Equation 1, verify that the current through a 10 Ω resistor increases when the voltage is increased from 5 V to 20 V.

Solution

For $V = 5$ V,

$$I = \frac{V}{R} = \frac{5\text{ V}}{10\ \Omega} = \mathbf{0.5\ A}$$

For $V = 20$ V,

$$I = \frac{V}{R} = \frac{20\text{ V}}{10\ \Omega} = \mathbf{2\ A}$$

*Related Problem**

Show that the current decreases when the resistance is increased from 5 Ω to 20 Ω and the voltage is a constant 10 V.

*Answers are at the end of the chapter.

Ohm's law can also be stated another equivalent way. By multiplying both sides of Equation 1 by R and transposing terms, you obtain an equivalent form of Ohm's law, as follows:

$$V = IR \qquad \text{Equation 2}$$

With this formula, you can calculate voltage in volts if you know the current in amperes and resistance in ohms.

www.EngineeringBooksPdf.com

EXAMPLE 2

Use the Ohm's law formula in Equation 2 to calculate the voltage across a 100 Ω resistor when the current is 2 A.

Solution

$$V = IR = (2\text{ A})(100\ \Omega) = \mathbf{200\ V}$$

Related Problem Find the voltage across a 1.0 kΩ resistor when the current is 1 mA.

There is a third equivalent way to state Ohm's law. By dividing both sides of Equation 2 by I and transposing terms, you obtain the following formula:

Equation 3

$$R = \frac{V}{I}$$

This expression of the Ohm's law formula is used to determine resistance in ohms if you know the values of voltage in volts and current in amperes.

Remember, the three expressions—Equations 1, 2, and 3—are all equivalent. They are simply three ways of stating Ohm's law.

EXAMPLE 3

Use the Ohm's law formula in Equation 3 to calculate the resistance of a rear window defroster grid in a certain vehicle. When it is connected to 12.6 V, it draws 15.0 A from the battery. What is the resistance of the defroster grid?

Solution

$$R = \frac{V}{I} = \frac{12.6\text{ V}}{15.0\text{ A}} = \mathbf{840\ m\Omega}$$

Related Problem If one of the grid wires opens, the current drops to 13.0 A. What is the new resistance?

The Linear Relationship of Current and Voltage

In resistive circuits, current and voltage are linearly proportional. **Linear** means that if one is increased or decreased by a certain percentage, the other will increase or decrease by the same percentage, assuming that the resistance is constant in value. For example, if the voltage across a resistor is tripled, the current will triple. If the voltage is reduced by half, the current will decrease by half.

EXAMPLE 4

Show that if the voltage in the circuit of Figure 3 is increased to three times its present value, the current will triple in value.

▶ FIGURE 3

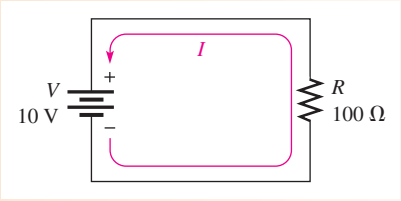

Solution With 10 V, the current is

$$I = \frac{V}{R} = \frac{10\text{ V}}{100\ \Omega} = 0.1\text{ A}$$

www.EngineeringBooksPdf.com

If the voltage is increased to 30 V, the current will be

$$I = \frac{V}{R} = \frac{30\text{ V}}{100\ \Omega} = 0.3\text{ A}$$

The current went from 0.1 A to 0.3 A when the voltage was tripled to 30 V.

Related Problem If the voltage in Figure 3 is quadrupled, will the current also quadruple?

Let's take a constant value of resistance, for example, 10 Ω, and calculate the current for several values of voltage ranging from 10 V to 100 V in the circuit in Figure 4(a). The current values obtained are shown in Figure 4(b). The graph of the I values versus the V values is shown in Figure 4(c). Note that it is a straight line graph. This graph shows that a change in voltage results in a linearly proportional change in current. No matter what value R is, assuming that R is constant, the graph of I versus V will always be a straight line.

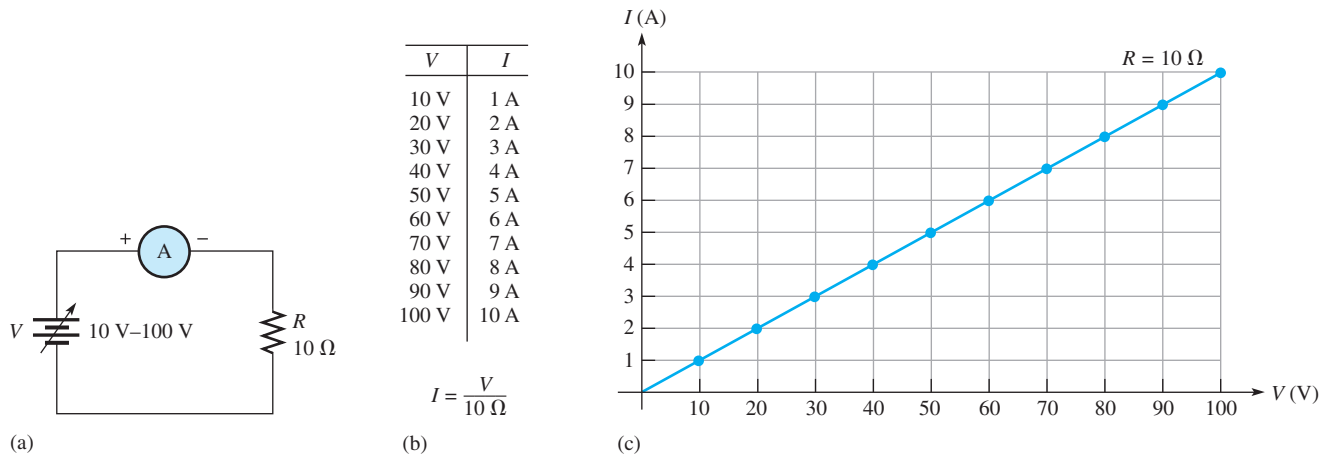

▲ **FIGURE 4**

Graph of current versus voltage for the circuit in part (a).

A Graphic Aid for Ohm's Law

You may find the graphic aid in Figure 5 helpful for applying Ohm's law. It is a way to remember the formulas.

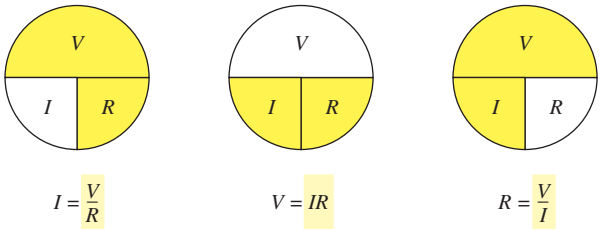

▲ **FIGURE 5**

A graphic aid for the Ohm's law formulas.

www.EngineeringBooksPdf.com

SECTION 1 CHECKUP
Answers are at the end of the chapter.

1. Briefly state Ohm's law in words.
2. Write the Ohm's law formula for calculating current.
3. Write the Ohm's law formula for calculating voltage.
4. Write the Ohm's law formula for calculating resistance.
5. If the voltage across a resistor is tripled, does the current increase or decrease? By how much?
6. There is a fixed voltage across a variable resistor, and you measure a current of 10 mA. If you double the resistance, how much current will you measure?
7. What happens to the current in a linear circuit where both the voltage and the resistance are doubled?

2 APPLICATION OF OHM'S LAW

This section provides examples of the application of Ohm's law for calculating voltage, current, and resistance in electric circuits. You will also see how to use quantities expressed with metric prefixes in circuit calculations.

After completing this section, you should be able to

- **Use Ohm's law to determine voltage, current, or resistance**
  - Use Ohm's law to find current when you know voltage and resistance
  - Use Ohm's law to find voltage when you know current and resistance
  - Use Ohm's law to find resistance when you know voltage and current
  - Use quantities with metric prefixes

Current Calculations

In these examples you will learn to determine current values when you know the values of voltage and resistance. In these problems, the formula $I = V/R$ is used. In order to get current in amperes, you must express the value of V in volts and the value of R in ohms.

EXAMPLE 5

An indicator light requires a 330 Ω resistor to limit current. The voltage across the current limiting resistor is 3 V. What is the current in the resistor?

Solution

$$I = \frac{V}{R} = \frac{3.0\text{ V}}{330\ \Omega} = \mathbf{9.09\ mA}$$

Related Problem How will the current change if a 270 Ω resistor is used instead and 3.0 V still is across the resistor?

In electronics, resistance values of thousands or millions of ohms are common. The metric prefixes *kilo* (k) and *mega* (M) are used to indicate large values. Thus, thousands of ohms are expressed in kilohms (kΩ), and millions of ohms are expressed in megohms (MΩ). The following examples illustrate how to use kilohms and megohms when you use Ohm's law to calculate current.

www.EngineeringBooksPdf.com

EXAMPLE 6

Calculate the current in milliamperes for the circuit of Figure 6.

▶ **FIGURE 6**

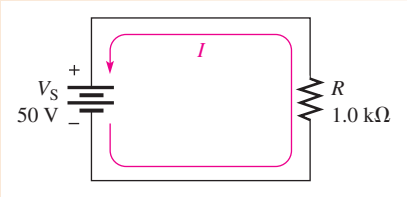

Solution Remember that 1.0 kΩ is the same as $1.0 \times 10^3\ \Omega$. Use the formula $I = V/R$ and substitute 50 V for V and $1.0 \times 10^3\ \Omega$ for R.

$$I = \frac{V_S}{R} = \frac{50\text{ V}}{1.0\text{ k}\Omega} = \frac{50\text{ V}}{1.0 \times 10^3\ \Omega} = 50 \times 10^{-3}\text{ A} = \mathbf{50\ mA}$$

Related Problem If the resistance in Figure 6 is increased to 10 kΩ, what is the current?

Open Multisim file E03-06; files are found at www.pearsonhighered.com/floyd/. Connect the multimeter to the circuit and verify the value of current calculated in this example.

In Example 6, the current is expressed as 50 mA. Thus, *when volts (V) are divided by kilohms (kΩ), the current is in milliamperes (mA).*

When volts (V) are divided by megohms (MΩ), the current is in microamperes (μA), as Example 7 illustrates.

EXAMPLE 7

Determine the amount of current in microamperes for the circuit of Figure 7.

▶ **FIGURE 7**

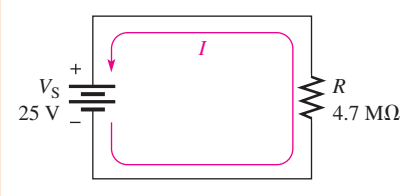

Solution Recall that 4.7 MΩ equals $4.7 \times 10^6\ \Omega$. Use the formula $I = V/R$ and substitute 25 V for V and $4.7 \times 10^6\ \Omega$ for R.

$$I = \frac{V_S}{R} = \frac{25\text{ V}}{4.7\text{ M}\Omega} = \frac{25\text{ V}}{4.7 \times 10^6\ \Omega} = 5.32 \times 10^{-6}\text{ A} = \mathbf{5.32\ \mu A}$$

Related Problem If the resistance in Figure 7 is decreased to 1.0 MΩ, what is the current?

Open Multisim file E03-07. Connect the multimeter to the circuit and verify the value of current calculated in this example.

www.EngineeringBooksPdf.com

Small voltages, usually less than 50 V, are common in electronic circuits. Occasionally, however, large voltages are encountered. For example, the high-voltage supply in a television receiver is around 20,000 V (20 kV). Transmission voltages generated by the power companies may be as high as 345,000 V (345 kV).

EXAMPLE 8

How much current in microamperes is there through a 100 MΩ resistor when 50 kV are applied across it?

Solution Divide 50 kV by 100 MΩ to get the current. Substitute 50×10^3 V for 50 kV and $100 \times 10^6\ \Omega$ for 100 MΩ in the formula for current. V_R is the voltage across the resistor.

$$I = \frac{V_R}{R} = \frac{50\text{ kV}}{100\text{ M}\Omega} = \frac{50 \times 10^3\text{ V}}{100 \times 10^6\ \Omega} = 0.5 \times 10^{-3}\text{ A} = 500 \times 10^{-6} = \mathbf{500\ \mu A}$$

Related Problem How much current is there through 10 MΩ when 2 kV are applied?

Voltage Calculations

In these examples you will learn how to determine voltage values when you know the current and resistance using the formula $V = IR$. To obtain voltage in volts, you must express the value of I in amperes and the value of R in ohms.

EXAMPLE 9

In the circuit of Figure 8, how much voltage is needed to produce 5 A of current?

▶ FIGURE 8

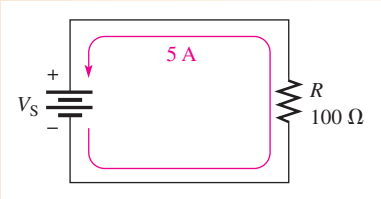

Solution Substitute 5 A for I and 100 Ω for R into the formula $V = IR$.

$$V_S = IR = (5\text{ A})(100\ \Omega) = \mathbf{500\ V}$$

Thus, 500 V are required to produce 5 A of current through a 100 Ω resistor.

Related Problem How much voltage is required to produce 8 A in the circuit of Figure 8?

EXAMPLE 10

How much voltage will be measured across the resistor in Figure 9?

▶ FIGURE 9

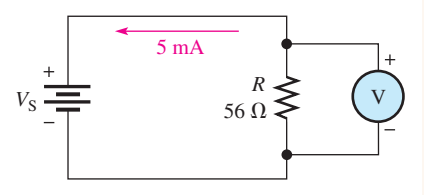

www.EngineeringBooksPdf.com

Solution Note that 5 mA equals 5×10^{-3} A. Substitute the values for I and R into the formula $V = IR$.

$$V_R = IR = (5\text{ mA})(56\ \Omega) = (5 \times 10^{-3}\text{ A})(56\ \Omega) = \mathbf{280\ mV}$$

When milliamperes are multiplied by ohms, the result is millivolts.

Related Problem Change the resistor in Figure 9 to 22 Ω and determine the voltage required to produce 10 mA.

EXAMPLE 11

The circuit in Figure 10 has a current of 10 mA. What is the source voltage?

▶ **FIGURE 10**

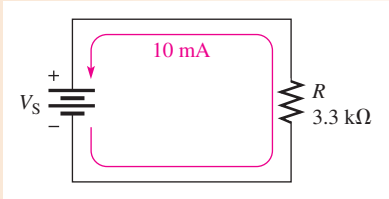

Solution Note that 10 mA equals 10×10^{-3} A and that 3.3 kΩ equals $3.3 \times 10^3\ \Omega$. Substitute these values into the formula $V = IR$.

$$V_S = IR = (10\text{ mA})(3.3\text{ k}\Omega) = (10 \times 10^{-3}\text{ A})(3.3 \times 10^3\ \Omega) = \mathbf{33\ V}$$

When milliamperes and kilohms are multiplied, the result is volts.

Related Problem What is the voltage in Figure 10 if the current is 5 mA?

EXAMPLE 12

A small solar cell is connected to a 27 kΩ resistor. In bright sunlight, the solar cell looks like a current source that can supply 180 μA to the resistor, as shown in Figure 11. What is the voltage across the resistor?

▶ **FIGURE 11**

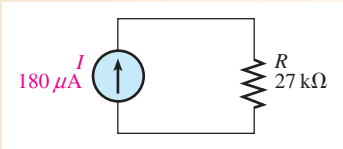

Solution

$$V_R = IR = (180\ \mu\text{A})(27\text{ k}\Omega) = \mathbf{4.86\ V}$$

Related Problem How does the voltage change when in cloudy conditions the current drops to 40 μA?

Open Multisim file E03-12. Connect a voltmeter across the resistor and confirm the voltage calculated in this example.

www.EngineeringBooksPdf.com

Resistance Calculations

In these examples you will learn how to determine resistance values when you know the voltage and current using the formula $R = V/I$. To find resistance in ohms, you must express the value of V in volts and the value of I in amperes.

EXAMPLE 13

An automotive lamp draws 2 A from the 13.2 V battery. What is the resistance of the bulb?

Solution

$$R = \frac{V}{I} = \frac{13.2\text{ V}}{2.0\text{ A}} = \mathbf{6.6\ \Omega}$$

Related Problem When operated at 6.6 V, the same bulb has a current of 1.1 A. What is the resistance of the bulb in this case?

EXAMPLE 14

A cadmium sulfide cell (CdS cell) is a photosensitive resistor that changes resistance when light strikes it. It is used in applications such as turning on lights at dusk. You could monitor the resistance indirectly from an ammeter when the cell is in an active circuit with the setup shown in Figure 12. What resistance is implied by the readings shown?

▶ FIGURE 12

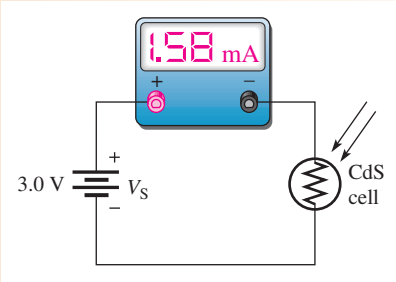

Solution

$$R = \frac{V}{I} = \frac{3.0\text{ V}}{1.58\text{ mA}} = \mathbf{1.90\ k\Omega}$$

Related Problem In the dark, the current drops to 76 μA. What resistance does this imply?

SECTION 2 CHECKUP

1. $V = 10$ V and $R = 4.7\ \Omega$. Find I.
2. If a 4.7 MΩ resistor has 20 kV across it, how much current is there?
3. How much current will 10 kV across a 2 kΩ resistance produce?
4. $I = 1$ A and $R = 10\ \Omega$. Find V.
5. What voltage do you need to produce 3 mA of current in a 3 kΩ resistance?
6. A battery produces 2 A of current through a 6 Ω resistive load. What is the battery voltage?
7. $V = 10$ V and $I = 2$ A. Find R.
8. In a stereo amplifier circuit there is a resistor across which you measure 25 V, and your ammeter indicates 50 mA of current through the resistor. What is the resistor's value in kilohms? In ohms?

www.EngineeringBooksPdf.com

3 ENERGY AND POWER

When there is current through a resistance, electrical energy is converted to heat or other form of energy, such as light. A common example of this is a light bulb that becomes too hot to touch. The current through the filament that produces light also produces unwanted heat because the filament has resistance. Electrical components must be able to dissipate a certain amount of energy in a given period of time.

After completing this section, you should be able to

- **Define *energy* and *power***
  - Express power in terms of energy and time
  - State the unit of power
  - State the common units of energy
  - Perform energy and power calculations

Energy is the ability to do work, and power is the rate at which energy is used.

In other words, power, P, is a certain amount of energy, W, used in a certain length of time (t), expressed as follows:

$$P = \frac{W}{t}$$

Equation 4

where P is power in watts (W), W is energy in joules (J), and t is time in seconds (s). Note that an italic W is used to represent energy in the form of work and a nonitalic W is used for watts, the unit of power. The **joule** is the SI unit for energy.

Energy in joules divided by time in seconds gives power in watts. For example, if 50 J of energy are used in 2 s, the power is $50\ \text{J}/2\ \text{s} = 25\ \text{W}$. By definition,

One watt is the amount of power when one joule of energy is used in one second.

Thus, the number of joules used in 1 s is always equal to the number of watts. For example, if 75 J are used in 1 s, the power is

$$P = \frac{W}{t} = \frac{75\ \text{J}}{1\ \text{s}} = 75\ \text{W}$$

Amounts of power much less than one watt are common in certain areas of electronics. As with small current and voltage values, metric prefixes are used to designate small amounts of power. Thus, milliwatts (mW) and microwatts (μW) are commonly found in some applications.

In the electrical utilities field, kilowatts (kW) and megawatts (MW) are common units. Radio and television stations also use large amounts of power to transmit signals. Electric motors are commonly rated in horsepower (hp) where 1 hp = 746 W.

Since power is the rate at which energy is used, power utilized over a period of time represents energy consumption. If you multiply power in watts and time in seconds, you have energy in joules, symbolized by W.

$$W = Pt$$

HISTORY NOTE

James Prescott Joule 1818–1889

Joule, a British physicist, is known for his research in electricity and thermodynamics. He formulated the relationship that states that the amount of heat energy produced by an electrical current in a conductor is proportional to the conductor's resistance and the time. The unit of energy is named in his honor. (Photo credit: Library of Congress.)

www.EngineeringBooksPdf.com

EXAMPLE 15

An amount of energy equal to 100 J is used in 5 s. What is the power in watts?

Solution

$$P = \frac{\text{energy}}{\text{time}} = \frac{W}{t} = \frac{100\text{ J}}{5\text{ s}} = \mathbf{20\ W}$$

Related Problem If 100 W of power occurs for 30 s, how much energy in joules is used?

EXAMPLE 16

Express the following powers using appropriate metric prefixes:

(a) 0.045 W **(b)** 0.000012 W **(c)** 3500 W **(d)** 10,000,000 W

Solution

(a) $0.045\text{ W} = 45 \times 10^{-3}\text{ W} = \mathbf{45\ mW}$

(b) $0.000012\text{ W} = 12 \times 10^{-6}\text{ W} = \mathbf{12\ \mu W}$

(c) $3500\text{ W} = 3.5 \times 10^{3}\text{ W} = \mathbf{3.5\ kW}$

(d) $10{,}000{,}000\text{ W} = 10 \times 10^{6}\text{ W} = \mathbf{10\ MW}$

Related Problem Express the following amounts of power in watts without metric prefixes:

(a) 1 mW **(b)** 1800 μW **(c)** 3 MW **(d)** 10 kW

The Kilowatt-hour (kWh) Unit of Energy

The joule has been defined as the unit of energy. However, there is another way to express energy. Since power is expressed in watts and time can be expressed in hours, a unit of energy called the kilowatt-hour (kWh) can be used.

When you pay your electric bill, you are charged on the basis of the amount of energy you use. Because power companies deal in huge amounts of energy, the most practical unit is the kilowatt-hour. You use a **kilowatt-hour** of energy when you use the equivalent of 1000 W of power for 1 h. For example, a 100 W light bulb burning for 10 h uses 1 kWh of energy.

$$W = Pt = (100\text{ W})(10\text{ h}) = 1000\text{ Wh} = 1\text{ kWh}$$

EXAMPLE 17

Determine the number of kilowatt-hours (kWh) for each of the following energy consumptions:

(a) 1400 W for 1 hr **(b)** 2500 W for 2 h **(c)** 100,000 W for 5 h

Solution

(a) $1400\text{ W} = 1.4\text{ kW}$

$W = Pt = (1.4\text{ kW})(1\text{ h}) = \mathbf{1.4\ kWh}$

(b) $2500\text{ W} = 2.5\text{ kW}$

Energy $= (2.5\text{ kW})(2\text{ h}) = \mathbf{5\ kWh}$

(c) $100{,}000\text{ W} = 100\text{ kW}$

Energy $= (100\text{ kW})(5\text{ h}) = \mathbf{500\ kWh}$

Related Problem How many kilowatt-hours of energy are used by a 250 W light bulb burning for 8 h?

www.EngineeringBooksPdf.com

Table 1 lists the typical power rating in watts for several household appliances. You can determine the maximum kWh for various appliances by using the power rating in Table 1 converted to kilowatts times the number of hours it is used.

◀ TABLE 1

APPLIANCE	POWER RATING (WATTS)
Air conditioner	860
Blow dryer	1000
Clock	2
Clothes dryer	4000
Dishwasher	1200
Heater	1322
Microwave oven	800
Range	12,200
Refrigerator	500
Television	250
Washing machine	400
Water heater	2500

HISTORY NOTE

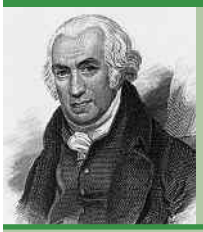

James Watt
1736–1819

Watt was a Scottish inventor and was well known for his improvements to the steam engine, which made it practical for industrial use. Watt patented several inventions, including the rotary engine. The unit of power is named in his honor. (Photo credit: Library of Congress.)

EXAMPLE 18

During a typical 24-hour period, you use the following appliances for the specified lengths of time:

air conditioner: 15 hours
blow dryer: 10 minutes
clock: 24 hours
clothes dryer: 1 hour
dishwasher: 45 minutes
microwave oven: 15 minutes
refrigerator: 12 hours
television: 2 hours
water heater: 8 hours

Determine the total kilowatt-hours and the electric bill for the time period. The rate is 11 cents per kilowatt-hour.

Solution Determine the kWh for each appliance used by converting the watts in Table 1 to kilowatts and multiplying by the time in hours:

air conditioner: $0.860\,\text{kW} \times 15\,\text{h} = 12.9\,\text{kWh}$

blow dryer: $1.0\,\text{kW} \times 0.167\,\text{h} = 0.167\,\text{kWh}$

clock: $0.002\,\text{kW} \times 24\,\text{h} = 0.048\,\text{kWh}$

clothes dryer: $4.0\,\text{kW} \times 1\,\text{h} = 4.0\,\text{kWh}$

dishwasher: $1.2\,\text{kW} \times 0.75\,\text{h} = 0.9\,\text{kWh}$

microwave: $0.8\,\text{kW} \times 0.25\,\text{h} = 0.2\,\text{kWh}$

refrigerator: $0.5\,\text{kW} \times 12\,\text{h} = 6\,\text{kWh}$

television: $0.25\,\text{kW} \times 2\,\text{h} = 0.5\,\text{kWh}$

water heater: $2.5\,\text{kW} \times 8\,\text{h} = 20\,\text{kWh}$

www.EngineeringBooksPdf.com

Now, add up all the kilowatt-hours to get the total energy for the 24-hour period.

$$\text{Total energy} = (12.9 + 0.167 + 0.048 + 4.0 + 0.9 + 0.2 + 6.0 + 0.5 + 20)\,\text{kWh}$$
$$= \mathbf{44.7\ kWh}$$

At 11 cents/kilowatt-hour, the cost of energy to run the appliances for the 24-hour period is

$$\text{Energy cost} = 44.7\,\text{kWh} \times 0.11\,\$/\text{kWh} = \mathbf{\$4.92}$$

Related Problem In addition to the appliances, suppose you used two 100 W light bulbs for 2 hours and one 75 W bulb for 3 hours. Calculate your cost for the 24-hour period for both appliances and lights.

SECTION 3 CHECKUP

1. Define *power.*
2. Write the formula for power in terms of energy and time.
3. Define *watt.*
4. Express each of the following values of power in the most appropriate units:
   (a) 68,000 W (b) 0.005 W (c) 0.000025 W
5. If you use 100 W of power for 10 h, how much energy (in kilowatt-hours) have you used?
6. Convert 2000 W to kilowatts.
7. How much does it cost to run a heater (1322 W) for 24 hours if energy cost is 11¢ per kilowatt-hour?

4 POWER IN AN ELECTRIC CIRCUIT

The generation of heat, which occurs when electrical energy is converted to heat energy, in an electric circuit is often an unwanted by-product of current through the resistance in the circuit. In some cases, however, the generation of heat is the primary purpose of a circuit as, for example, in an electric resistive heater. In any case, you must frequently deal with power in electrical and electronic circuits.

After completing this section, you should be able to

- **Calculate power in a circuit**
  - Determine power when you know I and R
  - Determine power when you know V and I
  - Determine power when you know V and R

When there is current through a resistance, the collisions of the electrons as they move through the resistance give off heat, resulting in a conversion of electrical energy to thermal energy as indicated in Figure 13. The amount of power dissipated in an electrical circuit is dependent on the amount of resistance and on the amount of current, expressed as follows:

Equation 5

$$P = I^2R$$

www.EngineeringBooksPdf.com

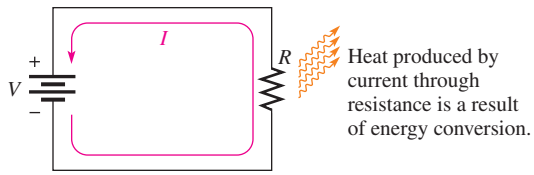

FIGURE 13

Power dissipation in an electric circuit is seen as heat given off by the resistance. The power dissipation is equal to the power supplied by the voltage source.

where P is power in watts (W), V is voltage in volts (V), and I is current in amperes (A). You can get an equivalent expression for power in terms of voltage and current by substituting $I \times I$ for I^2 and V for IR.

$$P = I^2R = (I \times I)R = I(IR) = (IR)I$$

$$\boldsymbol{P = VI} \qquad \textbf{Equation 6}$$

You can obtain another equivalent expression by substituting V/R for I (Ohm's law).

$$P = VI = V\left(\frac{V}{R}\right)$$

$$\boldsymbol{P = \frac{V^2}{R}} \qquad \textbf{Equation 7}$$

The three power expressions in Equations 5, 6, and 7 are known as **Watt's law**. To calculate the power in a resistance, you can use any one of the three equivalent Watt's law power formulas, depending on what information you have. For example, assume that you know the values of current and voltage; in this case, calculate the power with the formula $P = VI$. If you know I and R, use the formula $P = I^2R$. If you know V and R, use the formula $P = V^2/R$.

An aid for using both Ohm's law and Watt's law is found in the chapter summary, Figure 26.

EXAMPLE 19

Calculate the power in each of the three circuits of Figure 14.

FIGURE 14

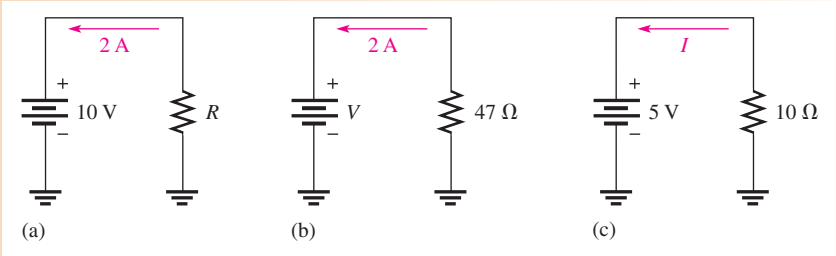

Solution In circuit (a), you know V and I. The power is determined as follows:

$$P = VI = (10\text{ V})(2\text{ A}) = \mathbf{20\ W}$$

In circuit (b), you know I and R. Therefore,

$$P = I^2R = (2\text{ A})^2(47\ \Omega) = \mathbf{188\ W}$$

In circuit (c), you know V and R. Therefore,

$$P = \frac{V^2}{R} = \frac{(5\text{ V})^2}{10\ \Omega} = \mathbf{2.5\ W}$$

Related Problem Determine the power in each circuit of Figure 14 for the following changes: In circuit (a), I is doubled and V remains the same; in circuit (b), R is doubled and I remains the same; in circuit (c), V is halved and R remains the same.

www.EngineeringBooksPdf.com

EXAMPLE 20

A solar yard light such as the one shown in Figure 15 has a solar collector that can provide 1.0 W of power for charging the 3.0 V batteries. What is the maximum charging current the solar collector could supply to fully discharged 3.0 V batteries?

▶ FIGURE 15

Streeter Photography/Alamy

Solution

$$I = \frac{P}{V} = \frac{1.0\text{ W}}{3.0\text{ V}} = \mathbf{0.33\ A}$$

Related Problem What is the power dissipated by the light at night if the current is 30 mA?

SECTION 4 CHECKUP

1. Assume a car window defroster is connected to 13.0 V and has a current of 12 A. What power is dissipated in the defroster?
2. If there is a current of 5 A through a 47 Ω resistor, what is the power dissipated?
3. Many oscilloscopes have a 50 Ω input position that places a 2 W, 50 Ω resistor between the input and ground. What is the maximum voltage that could be applied to the input before exceeding the power rating of this resistor?
4. Assume a car seat heater has an internal resistance of 3.0 Ω. If the battery voltage is 13.4 V, what power is dissipated by the heater when it is on?
5. How much power does a 2.2 kΩ resistor with 8 V across it produce?
6. What is the resistance of a 55 W bulb that draws 0.5 A?

5 THE POWER RATING OF RESISTORS

As you know, a resistor gives off heat when there is current through it. There is a limit to the amount of heat that a resistor can give off, which is specified by its power rating.

After completing this section, you should be able to

- **Properly select resistors based on power consideration**
  - Define *power rating*
  - Explain how physical characteristics of resistors determine their power rating
  - Check for resistor failure with an ohmmeter

www.EngineeringBooksPdf.com

The **power rating** is the maximum amount of power that a resistor can dissipate without being damaged by excessive heat buildup. The power rating is not related to the ohmic value (resistance) but rather is determined mainly by the physical composition, size, and shape of the resistor. All else being equal, the larger the surface area of a resistor, the more power it can dissipate. *The surface area of a cylindrically shaped resistor is equal to the length (l) times the circumference (c),* as indicated in Figure 16. The area of the ends is not included.

SAFETY NOTE

Some resistors can become very hot in normal operation. To avoid a burn, do not touch a circuit component while the power is connected to the circuit. After power has been turned off, allow time for the components to cool down.

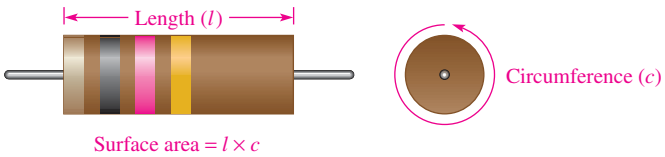

▲ **FIGURE 16**

The power rating of a resistor is directly related to its surface area.

Metal-film resistors are available in standard power ratings from ⅛ W to 1 W, as shown in Figure 17. Available power ratings for other types of resistors vary. For example, wirewound resistors have ratings up to 225 W or greater. Figure 18 shows some of these resistors.

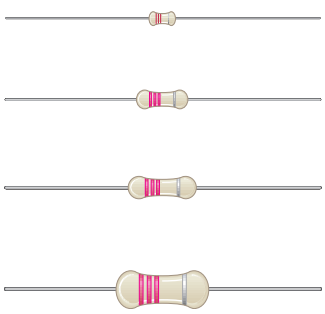

▲ **FIGURE 17**

Relative sizes of metal-film resistors with standard power ratings of ⅛ W, ¼ W, ½ W, and 1 W.

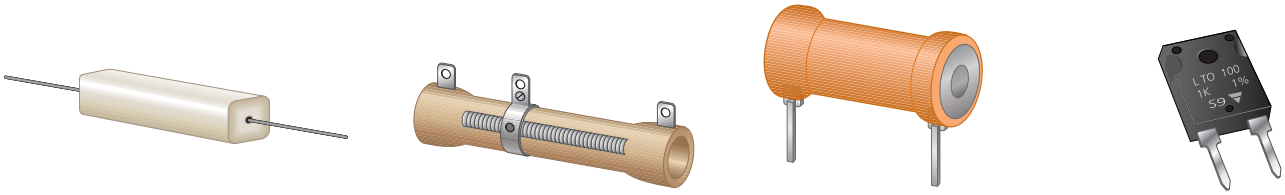

(a) Axial-lead wirewound (b) Adjustable wirewound (c) Radial-lead for PC board insertion (d) Thick-film power

▲ **FIGURE 18**

Typical resistors with high power ratings.

When a resistor is used in a circuit, its power rating should be greater than the maximum power that it will have to handle to create a safety margin. Generally, the next higher standard value is used. For example, if a metal-film resistor is to dissipate 0.75 W in a circuit application, its rating should be the next higher standard value which is 1 W.

www.EngineeringBooksPdf.com

EXAMPLE 21

Choose an adequate power rating (⅛ W, ¼ W, ½ W, or 1 W) for each of the metal-film resistors represented in Figure 19.

▶ **FIGURE 19**

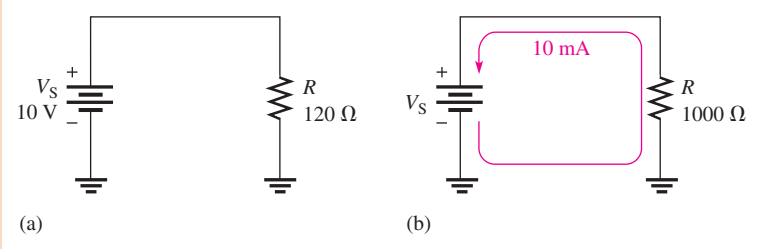

Solution For the circuit in Figure 19(a), the actual power is

$$P = \frac{V_S^2}{R} = \frac{(10\text{ V})^2}{120\ \Omega} = \frac{100\text{ V}^2}{120\ \Omega} = 0.833\text{ W}$$

Select a resistor with a power rating higher than the actual power dissipation. In this case, a **1 W resistor** should be used.

For the circuit in Figure 19(b), the actual power is

$$P = I^2R = (10\text{ mA})^2(1000\ \Omega) = 0.1\text{ W}$$

A ⅛ W **(0.125 W) resistor** should be used in this case.

Related Problem A certain resistor is required to dissipate 0.25 W (¼ W). What standard rating should be used?

When the power dissipated in a resistor is greater than its rating, the resistor will become excessively hot. As a result, the resistor may burn open or its resistance value may be greatly altered.

A resistor that has been damaged because of overheating can often be detected by the charred or altered appearance of its surface. If there is no visual evidence, a resistor that is suspected of being damaged can be checked with an ohmmeter for an open or increased resistance value. Recall that a resistor should be disconnected from the circuit to measure resistance. Sometimes an overheated resistor is due to another failure in the circuit. After replacing an overheated resistor, the underlying cause should be investigated before restoring power to the circuit.

EXAMPLE 22

Determine whether the resistor in each circuit of Figure 20 has possibly been damaged by overheating.

▶ **FIGURE 20**

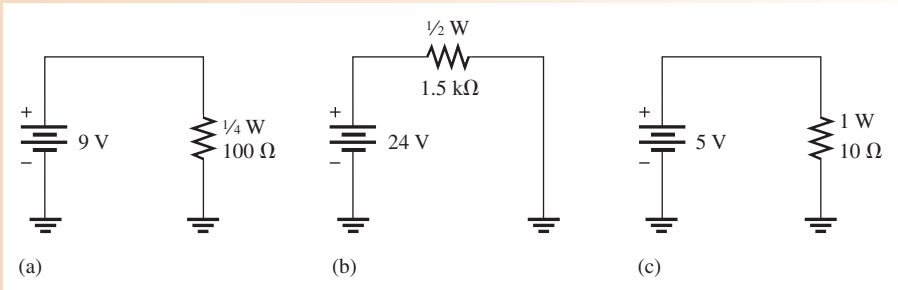

www.EngineeringBooksPdf.com

Solution For the circuit in Figure 20(a),

$$P = \frac{V^2}{R} = \frac{(9\text{ V})^2}{100\ \Omega} = 0.81\text{ W}$$

The rating of the resistor is ¼ W (0.25 W), which is insufficient to handle the power. The resistor has been overheated and may be burned out, making it an open.

For the circuit in Figure 20(b),

$$P = \frac{V^2}{R} = \frac{(24\text{ V})^2}{1.5\text{ k}\Omega} = 0.384\text{ W}$$

The rating of the resistor is ½ W (0.5 W), which is sufficient to handle the power.

For the circuit in Figure 20(c),

$$P = \frac{V^2}{R} = \frac{(5\text{ V})^2}{10\ \Omega} = 2.5\text{ W}$$

The rating of the resistor is 1 W, which is insufficient to handle the power. The resistor has been overheated and may be burned out, making it an open.

Related Problem A ¼ W, 1.0 kΩ resistor is connected across a 12 V battery. Will it overheat?

SECTION 5 CHECKUP

1. Name two important parameters associated with a resistor.
2. How does the physical size of a resistor determine the amount of power that it can handle?
3. List the standard power ratings of metal-film resistors.
4. A resistor must handle 0.3 W. What standard size metal-film resistor should be used to dissipate the energy properly?
5. What is the maximum voltage that can be applied to a ¼ W, 100 Ω resistor if the power rating is not to be exceeded?

6 ENERGY CONVERSION AND VOLTAGE DROP IN A RESISTANCE

As you have learned, when there is current through a resistance, electrical energy is converted to heat energy. This heat is caused by collisions of the free electrons within the atomic structure of the resistive material. When a collision occurs, heat is given off; and the electron gives up some of its acquired energy as it moves through the material.

After completing this section, you should be able to

- **Explain energy conversion and voltage drop**
  - Discuss the cause of energy conversion in a circuit
  - Define *voltage drop*
  - Explain the relationship between energy conversion and voltage drop

www.EngineeringBooksPdf.com

Figure 21 illustrates charge in the form of electrons flowing from the negative terminal of a battery, through a circuit, and back to the positive terminal. As they emerge from the negative terminal, the electrons are at their highest energy level. The electrons flow through each of the resistors that are connected together to form a current path (this type of connection is called series. As the electrons flow through each resistor, some of their energy is given up in the form of heat. Therefore, the electrons have more energy when they enter a resistor than when they exit the resistor, as illustrated in the figure by the decrease in the intensity of the red color. When they have traveled through the circuit back to the positive terminal of the battery, the electrons are at their lowest energy level.

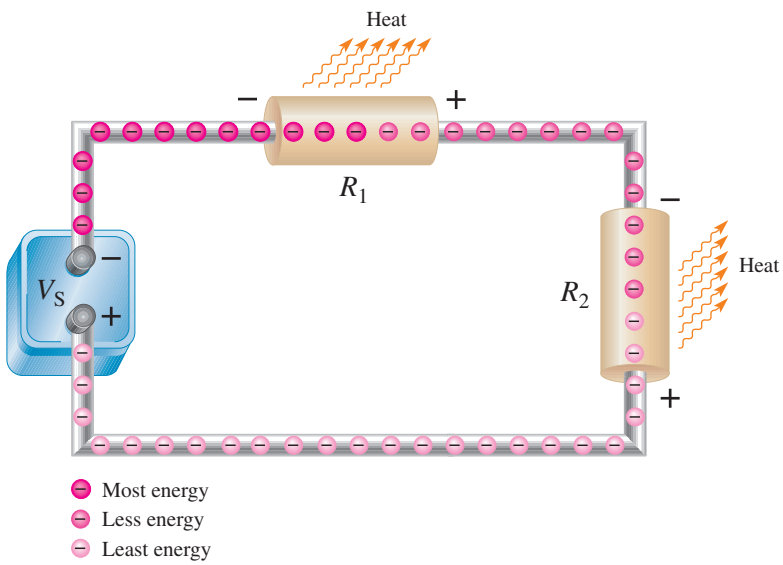

▲ FIGURE 21

A loss of energy by electrons (charge) as they flow through a resistance creates a voltage drop because voltage equals energy divided by charge.

Recall that voltage equals energy per charge ($V = W/Q$) and that charge is a property of electrons. Based on the voltage of the battery, a certain amount of energy is imparted to all of the electrons that flow out of the negative terminal. The same number of electrons flow at each point throughout the circuit, but their energy decreases as they move through the resistance of the circuit.

In Figure 21, the voltage at the left end of R_1 is equal to W_{enter}/Q, and the voltage at the right end of R_1 is equal to W_{exit}/Q. The same number of electrons that enter R_1 also exit R_1, so Q is constant. However, the energy W_{exit} is less than W_{enter}, so the voltage at the right end of R_1 is less than the voltage at the left end. This decrease in voltage across the resistor due to a loss of energy is called a **voltage drop**. The voltage at the right end of R_1 is less negative (or more positive) than the voltage at the left end. The voltage drop is indicated by − and + signs (the + implies a more positive voltage).

The electrons have lost some energy in R_1 and now they enter R_2 with a reduced energy level. As they flow through R_2, they lose more energy, resulting in another voltage drop across R_2.

SECTION 6 CHECKUP

1. What is the basic reason for energy conversion in a resistor?
2. What is a voltage drop?
3. What is the polarity of a voltage drop in relation to current direction?

www.EngineeringBooksPdf.com

7 POWER SUPPLIES AND BATTERIES

A **power supply** is generally defined as a device that converts ac (alternating current) from the utility lines to a dc (direct current) voltage that virtually all electronic circuits and some transducers require. Batteries are also capable of supplying dc; in fact, many systems, such as laptop computers, can run from a power supply or internal battery. In this section, both types of voltage sources are described.

After completing this section, you should be able to

- **Discuss characteristics of power supplies and batteries**
  - Describe controls on typical laboratory power supplies
  - Determine the efficiency of a power supply given the input and output power
  - Define ampere-hour rating of batteries

Utilities universally have adopted ac for transmitting electricity from the generating station to the user because it can be readily transformed to high voltages for transmission and low voltages for the end user. High voltages are much more efficient and cost-effective to transmit over long distances. In the United States, the standard voltage supplied to outlets is approximately 120 V or 240 V at 60 Hz, but in Europe and other countries, the outlet voltage is 240 V at 50 Hz.

Virtually all electronic systems require stable dc for the integrated circuits and other devices to work properly. Power supplies fulfill this function by converting ac to stable dc and are usually built into the product. Many electronic systems have a recessed and protected switch that allows the internal power supply to be set for either the 120 V standard or for the 240 V standard. That switch must be set correctly, or serious damage can occur to the equipment.

In the laboratory, circuits are developed and tested. The purpose of a laboratory power supply is to provide the required stable dc to the circuit under test. The test circuit can be anything from a simple resistive network to a complex amplifier or logic circuit. To meet the requirement for a constant voltage, with almost no noise or ripple, laboratory power supplies are **regulated power supplies**, meaning the output is constantly sensed and automatically adjusted if it tries to change because of a change in the line voltage or the load.

Many circuits require multiple voltages, as well as the ability to set the voltage to a precise value or change it a small amount for testing. For this reason, laboratory power supplies usually have two or three outputs that are independent of each other and can be controlled separately. Output metering is normally part of a good laboratory power supply, in order to set and monitor the output voltage or current. Control may include fine and coarse controls or digital inputs to set precise voltages.

Figure 22 shows a triple output bench supply such as the type used in many electronic laboratories. The model shown has two 0–30 V independent supplies and a 4 V–6.5 V high current supply (commonly referred to a logic supply). Voltages can be precisely set using coarse and fine controls. The 0–30 V supplies have floating outputs, meaning they are not referenced to ground. This allows the user to set them up as a positive or negative supply or even connect them to another external supply. Another feature of this supply is that it can be set up as a current source, with a maximum voltage set for constant-current applications.

As in many power supplies, there are three output banana jacks for each of the 0–30 V supplies. The output is taken between the red (more positive) and black terminals. The green jack is referenced to the chassis, which is earth ground. Ground can be connected to either the red or black jacks, which are normally "floating" (not referenced to ground). In addition, current and voltage can be monitored using the built-in digital meters.

HANDS ON TIP

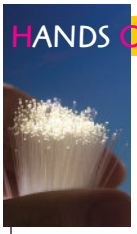

A power supply provides both output voltage and current. You should make sure the voltage range is sufficient for your applications. Also, you must have sufficient current capacity to assure proper circuit operation. The current capacity is the maximum current that a power supply can provide to a load at a given voltage.

www.EngineeringBooksPdf.com

▶ FIGURE 22

A triple output power supply. (Courtesy of B+K Precision)

The power delivered by a power supply is the product of the absolute voltage and current. For example, if a power supply is providing −15.0 V at 3.0 A, the supplied power is 45 W. For a triple output supply, the total power supplied by all three supplies is the sum of the power from each one individually.

EXAMPLE 23

What is the total power delivered by a triple output power supply if the output voltage and current are as follows?

Source 1: 18 V at 2.0 A

Source 2: −18 V at 1.5 A

Source 3: 5.0 V at 1.0 A

Solution Power delivered from each supply is the product of voltage and current (ignoring the sign).

Source 1: $P_1 = V_1I_1 = (18\text{ V})(2.0\text{ A}) = 36\text{ W}$

Source 2: $P_2 = V_2I_2 = (18\text{ V})(1.5\text{ A}) = 27\text{ W}$

Source 3: $P_3 = V_3I_3 = (5.0\text{ V})(1.0\text{ A}) = 5.0\text{ W}$

The total power is

$$P_T = P_1 + P_2 + P_3 = 36\text{ W} + 27\text{ W} + 5.0\text{ W} = \mathbf{68\text{ W}}$$

Related Problem How will the total power delivered change if the current from Source 1 increases to 2.5 A?

Power Supply Efficiency

An important characteristic of power supplies is efficiency. **Efficiency** is the ratio of the output power, P_{OUT}, to the input power, P_{IN}.

Equation 8

$$\textbf{Efficiency} = \frac{P_{OUT}}{P_{IN}}$$

Efficiency is often expressed as a percentage. For example, if the input power is 100 W and the output power is 50 W, the efficiency is $(50\text{ W}/100\text{ W}) \times 100\% = 50\%$.

All electronic power supplies are energy converters and require that power be put into them in order to get power out. For example, an electronic dc power supply might use the ac power from a wall outlet as its input. Its output is usually regulated dc voltage. The output

www.EngineeringBooksPdf.com

power is *always* less than the input power because some of the total power is used internally to operate the power supply circuitry. This internal power dissipation is normally called the *power loss.* The output power is the input power minus the power loss.

$$P_{OUT} = P_{IN} - P_{LOSS}$$ **Equation 9**

High efficiency means that very little power is dissipated in the power supply and there is a higher proportion of output power for a given input power.

EXAMPLE 24

A certain electronic power supply requires 25 W of input power. It can produce an output power of 20 W. What is its efficiency, and what is the power loss?

Solution

$$\text{Efficiency} = \frac{P_{OUT}}{P_{IN}} = \left(\frac{20\text{ W}}{25\text{ W}}\right) = \mathbf{0.8}$$

Expressed as a percentage,

$$\text{Efficiency} = \frac{20\text{ W}}{25\text{ W}} = 80\%$$

$$P_{LOSS} = P_{IN} - P_{OUT} = 25\text{ W} - 20\text{ W} = \mathbf{5\ W}$$

Related Problem A power supply has an efficiency of 92%. If P_{IN} is 50 W, what is P_{OUT}?

Ampere-Hour Ratings of Batteries

Batteries convert stored chemical energy to electrical energy. They are widely used to power small systems, such as laptop computers and cell phones, to supply the stable dc required. The batteries used in these small systems are normally rechargeable, meaning that the chemical reaction can be reversed from an external source. The capacity for any battery is measured in ampere-hours (Ah). For a rechargeable battery, the Ah rating is the capacity before it needs to be recharged. The **Ah rating** determines the length of time a battery can deliver a certain amount of current at the rated voltage.

A rating of one ampere-hour means that a battery can deliver an average of one ampere of current to a load for one hour at the rated voltage output. This same battery can deliver an average of two amperes for one-half hour. The more current the battery is required to deliver, the shorter the life of the battery. In practice, a battery usually is rated for a specified current level and output voltage. For example, a 12 V automobile battery may be rated for 70 Ah at 3.5 A. This means that it can supply an average of 3.5 A for 20 h at the rated voltage.

EXAMPLE 25

For how many hours can a battery deliver 2 A if it is rated at 70 Ah?

Solution The ampere-hour rating is the current times the number of hours, x.

$$70\text{ Ah} \times (2\text{ A})(x\text{ h})$$

Solving for the number of hours, x, yields

$$x = \frac{70\text{ Ah}}{2\text{ A}} = \mathbf{35\ h}$$

Related Problem A certain battery delivers 10 A for 6 h. What is its minimum Ah rating?

www.EngineeringBooksPdf.com

SECTION 7 CHECKUP

1. When a loading device draws an increased amount of current from a power supply, does this change represent a greater or a smaller load on the supply?
2. A power supply produces an output voltage of 10 V. If the supply provides 0.5 A to a load, what is the power output?
3. If a battery has an ampere-hour rating of 100 Ah, how long can it provide 5 A to a load?
4. If the battery in Question 3 is a 12 V device, what is its power output for the specified value of current?
5. A power supply used in the lab operates with an input power of 1 W. It can provide an output power of 750 mW. What is its efficiency?

8 INTRODUCTION TO TROUBLESHOOTING

Technicians must be able to diagnose and repair malfunctioning circuits and systems. In this section, you learn a general approach to troubleshooting using a simple example. Troubleshooting coverage is an important part of this textbook, so you will find a troubleshooting section in many of the chapters as well as troubleshooting problems for skill building.

After completing this section, you should be able to

- **Describe a basic approach to troubleshooting**
  - List three steps in troubleshooting
  - Explain what is meant by half-splitting
  - Discuss and compare the three basic measurements of voltage, current, and resistance

Troubleshooting is the application of logical thinking combined with a thorough knowledge of circuit or system operation to correct a malfunction. The basic approach to troubleshooting consists of three steps: *analysis, planning,* and *measuring.* We will refer to this 3-step approach as APM.

HANDS ON TIP

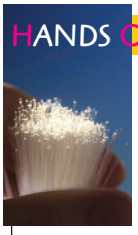

When you troubleshoot a newly manufactured circuit on a pc board, certain failures are possible that are not likely on a circuit that has been working. For example, a wrong part may have accidentally been used in the new circuit or a pin may have been bent when it was installed. Cases occur where a series of newly manufactured boards have identical faults because of a wrong part.

Analysis

The first step in troubleshooting a circuit is to analyze clues or symptoms of the failure. The analysis can begin by determining the answer to certain questions:

1. Has the circuit ever worked?
2. If the circuit once worked, under what conditions did it fail?
3. What are the symptoms of the failure?
4. What are the possible causes of failure?

Planning

The second step in the troubleshooting process, after analyzing the clues, is formulating a logical plan of attack. Much time can be saved by proper planning. A working knowledge of the circuit is a prerequisite to a plan for troubleshooting. If you are not certain how the circuit is supposed to operate, take time to review circuit diagrams (schematics), operating

www.EngineeringBooksPdf.com

instructions, and other pertinent information. A schematic with proper voltages marked at various test points is particularly useful. Although logical thinking is perhaps the most important tool in troubleshooting, it rarely can solve the problem by itself.

Measuring

The third step is to narrow the possible failures by making carefully thought out measurements. These measurements usually confirm the direction you are taking in solving the problem, or they may point to a new direction that you should take. Occasionally, you may find a totally unexpected result.

An APM Example

The thought process that is part of the APM approach can be illustrated with a simple example. Suppose you have a string of eight decorative 12 V bulbs connected in series to a 120 V source V_S, as shown in Figure 23. Assume that this circuit worked properly at one time but stopped working after it was moved to a new location. When plugged in at the new location, the bulbs fail to turn on. How do you go about finding the trouble?

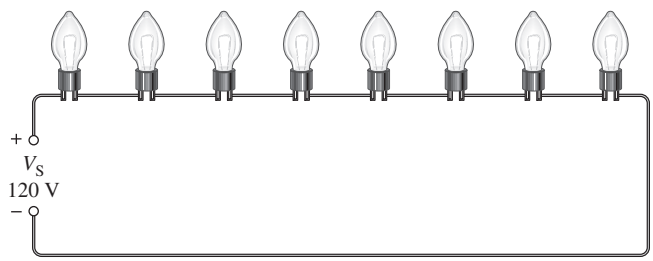

FIGURE 23

A string of bulbs connected to a voltage source.

The Analysis Thought Process You may think like this as you proceed to analyze the situation:

- Since the circuit worked before it was moved, the problem could be that there is no voltage at the new location.
- Perhaps the wiring was loose and pulled apart when moved.
- It is possible that a bulb is burned out or loose in its socket.

With this reasoning, you have considered possible causes and failures that may have occurred. The thought process continues:

- The fact that the circuit once worked eliminates the possibility that the original circuit was improperly wired.
- If the fault is due to an open path, it is unlikely that there is more than one break which could be either a bad connection or a burned out bulb.

You have now analyzed the problem and are ready to plan the process of finding the fault in the circuit.

The Planning Thought Process The first part of your plan is to measure for voltage at the new location. If the voltage is present, then the problem is in the string of lights. If voltage is not present, check the circuit breaker at the distribution box in the house. Before resetting breakers, you should think about why a breaker may be tripped. Let's assume that you find the voltage is present. This means that the problem is in the string of lights.

The second part of your plan is to measure either the resistance in the string of lights or to measure voltages across the bulbs. The decision whether to measure resistance or voltage is a toss-up and can be made based on the ease of making the test. Seldom is a troubleshooting

www.EngineeringBooksPdf.com

plan developed so completely that all possible contingencies are included. You will frequently need to modify the plan as you go along.

The Measurement Process You proceed with the first part of your plan by using a multimeter to check the voltage at the new location. Assume the measurement shows a voltage of 120 V. Now you have eliminated the possibility of no voltage. You know that, since you have voltage across the string and there is no current because no bulb is on, there must be an open in the current path. Either a bulb is burned out, a connection at the lamp socket is broken, or the wire is broken.

Next, you decide to locate the break by measuring resistance with your multimeter. Applying logical thinking, you decide to measure the resistance of each half of the string instead of measuring the resistance of each bulb. By measuring the resistance of half the bulbs at once, you can usually reduce the effort required to find the open. This technique is a type of troubleshooting procedure called **half-splitting**.

Once you have identified the half in which the open occurs, as indicated by an infinite resistance, you use half-splitting again on the faulty half and continue until you narrow the fault down to a faulty bulb or connection. This process is shown in Figure 24, assuming for purposes of illustration that the seventh bulb is burned out.

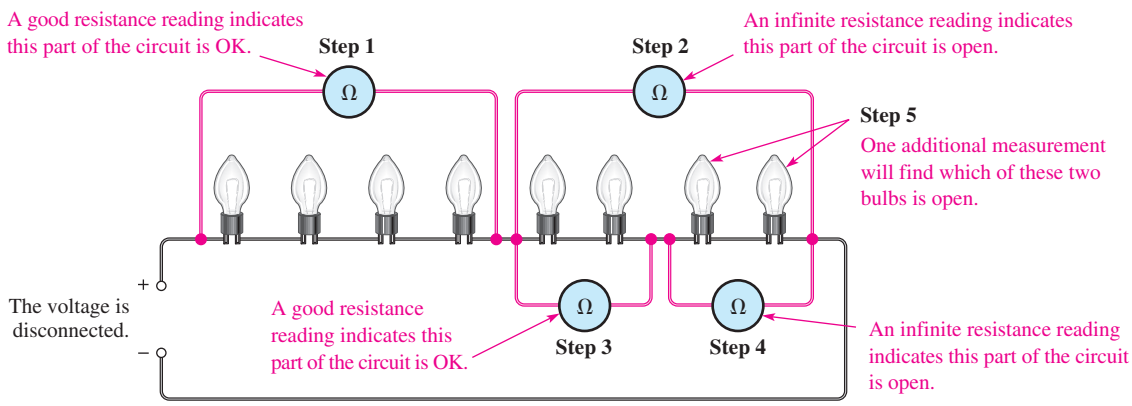

▲ **FIGURE 24**

Illustration of the half-splitting method of troubleshooting. The numbered steps indicate the sequence in which the multimeter is moved from one position to another.

As you can see in the figure, the half-splitting approach in this particular case takes a maximum of five measurements to identify the open bulb. If you had decided to measure each bulb individually and had started at the left, you would have needed seven measurements. So, sometimes half-splitting saves steps; sometimes it doesn't. The number of steps required depends on where you make your measurements and in what sequence.

Unfortunately, most troubleshooting is more difficult than this example. However, analysis and planning are essential for effective troubleshooting in any situation. As measurements are made, the plan is often modified; the experienced troubleshooter narrows the search by fitting the symptoms and measurements into a probable cause. In some cases, low-cost equipment is simply discarded or recycled when troubleshooting and repair costs are comparable to replacement costs.

Comparison of *V*, *R*, and *I* Measurements

You can measure voltage, current, or resistance in a circuit. To measure voltage, place the voltmeter in parallel across the component; that is, place one lead on each side of the component. This makes voltage measurements the easiest of the three types of measurements.

www.EngineeringBooksPdf.com

To measure resistance, connect the ohmmeter across a component; however, the voltage must be first disconnected, and sometimes the component itself must be removed from the circuit. Therefore, resistance measurements are generally more difficult than voltage measurements.

To measure current, place the ammeter in series with the component; that is, the ammeter must be in line with the current path. To do this you must disconnect a component lead or a wire before you connect the ammeter. This usually makes a current measurement the most difficult to perform.

SECTION 8 CHECKUP

1. Name the three steps in the APM approach to troubleshooting.
2. Explain the basic idea of the half-splitting technique.
3. Why are voltages easier to measure than currents in a circuit?

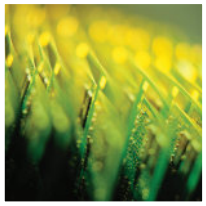

Application Assignment

PUTTING YOUR KNOWLEDGE TO WORK

In this assignment, you are completing a resistance substitution box used in testing circuits with up to 5.0 V. The required resistors range from 10 Ω to 4.7 kΩ. Your job is to determine the wattage rating for the required resistors, prepare a parts list, determine the cost of the parts, draw a schematic, and prepare a test procedure for the circuit. You will need to use Watt's law to complete the assignment.

The specifications are as follows:

1. Each resistor is switch-selectable from a rotary switch, so that only one resistor is connected across the output terminals at a time.
2. Resistors range in value from 10 Ω to 4.7 kΩ. Each of the sizes required is about twice the size of the previous resistor. In order to use standard values, the following sizes have been selected: 10 Ω, 22 Ω, 47 Ω, 100 Ω, 220 Ω, 470 Ω, 1.0 kΩ, 2.2 kΩ, and 4.7 kΩ. Resistors are to be ± 5%,with a minimum of ¼ W rating (more as needed). Small resistors (½ W or less) are carbon composition; resistors larger than ½ W are metal oxide.
3. The maximum voltage that will be applied to the resistor box is 5.0 V.
4. The box is to have two binding posts to connect to the resistors.

Step 1: Determining the Wattage Rating and Cost of the Resistors

The resistor substitution box has been prepared with values silk-screened onto the chassis, and the reverse side of the PC board has been prepared as shown in Figure 25. Use Watt's law and the specified resistor values to determine the specific resistors needed for the project. Table 2 indicates the cost for resistors purchased in small quantities.

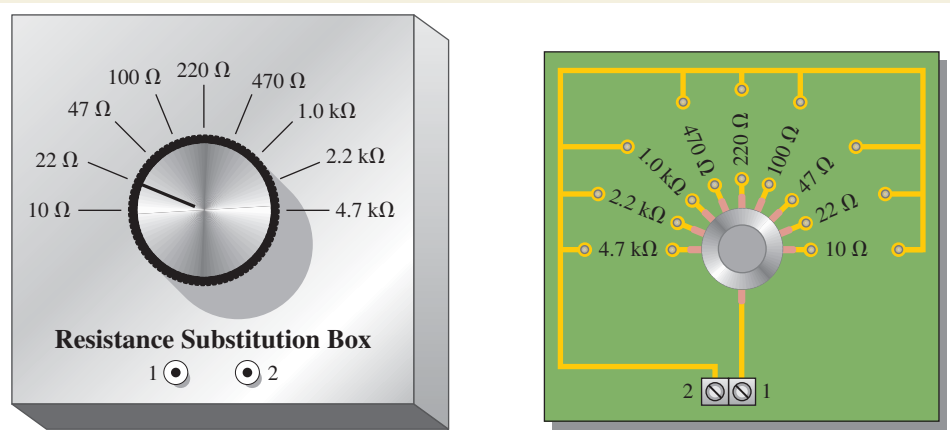

(a) Top view of enclosure box

(b) Bottom view of PC board

▲ FIGURE 25

www.EngineeringBooksPdf.com

▶ TABLE 2

COMPONENT	COST PER ITEM
$^1/_4$ W resistor (carbon comp.)	$ 0.08
$^1/_2$ W resistor (carbon comp.)	$ 0.09
1 W resistor (metal oxide)	$ 0.09
2 W resistor (metal oxide)	$ 0.10
5 W resistor (metal oxide)	$ 0.33
1 pole, 9-position rotary switch	$10.30
Knob	$ 3.30
Enclosure (4″ × 4″ × 2″ Al)	$ 8.46
Screw terminal (dual)	$ 0.20
Binding posts	$ 0.60
PC board (etched with pattern)	$ 1.78
Miscellaneous standoffs, etc.	$ 0.50

Step 2: Developing a Materials List and Estimating the Total Cost of the Project

You will need to prepare a list of materials and cost estimate based on the specific resistors required. Prepare a complete materials list showing quantities and cost. Estimate the total cost of the project, not counting labor.

Step 3: Drawing the Schematic

From the requirements and the board layout, develop a schematic for the circuit. Show the resistor values, including the wattage rating next to each resistor.

Step 4: Developing a Test Procedure

After the resistance substitution box is constructed, list steps you would take to ensure that it works properly. List the instruments you would use in testing it.

Step 5: Troubleshooting the Circuit

Describe the most likely fault for each of the following problems and how you would check to verify the problem:

1. The ohmmeter reads infinite resistance for the 10 Ω position.
2. The ohmmeter reads infinite resistance for all positions of the switch.
3. All resistors read 10% higher than the listed value.

Review

1. Explain how Watt's law was applied to this application assignment.
2. Could the resistors you specified be used in circuits with a 7 V output? Explain.

SUMMARY

- Voltage and current are linearly proportional.
- Ohm's law gives the relationship of voltage, current, and resistance.
- Current is inversely proportional to resistance.
- A kilohm (kΩ) is one thousand ohms.
- A megohm (MΩ) is one million ohms.
- A microampere (μA) is one-millionth of an ampere.
- A milliampere (mA) is one-thousandth of an ampere.
- Use $I = V/R$ to calculate current.
- Use $V = IR$ to calculate voltage.
- Use $R = V/I$ to calculate resistance.
- One watt equals one joule per second.
- Watt is the unit of power, and joule is the unit of energy.

www.EngineeringBooksPdf.com

- The power rating of a resistor determines the maximum power that it can handle safely.
- Resistors with a larger physical size can dissipate more power in the form of heat than smaller ones.
- A resistor should have a power rating as high or higher than the maximum power that it is expected to handle in the circuit.
- Power rating is not related to resistance value.
- A resistor usually opens when it overheats and fails.
- Energy is equal to power multiplied by time.
- The kilowatt-hour is a unit of energy.
- An example of one kilowatt-hour is one thousand watts used for one hour.
- A power supply is an energy source used to operate electrical and electronic devices.
- A battery is one type of power supply that converts chemical energy into electrical energy.
- A power supply converts commercial energy (ac from the power company) to regulated dc at various voltage levels.
- The output power of a power supply is the output voltage times the load current.
- A load is a device that draws current from the power supply.
- The capacity of a battery is measured in ampere-hours (Ah).
- One ampere-hour equals one ampere used for one hour, or any other combination of amperes and hours that has a product of one.
- A power supply with a high efficiency has a smaller percentage power loss than one with a lower efficiency.
- The formula wheel in Figure 26 gives the Ohm's law and Watt's law relationships.
- APM (analysis, planning, and measurement) provides a logical approach to troubleshooting.
- The half-splitting method of troubleshooting generally results in fewer measurements.

FIGURE 26

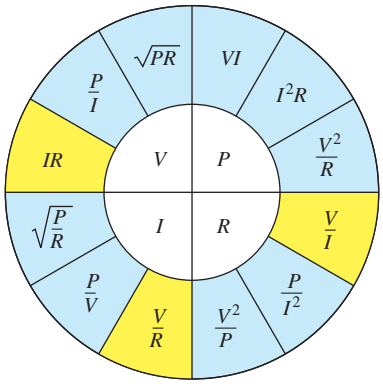

Ohm's law Watt's law

KEY TERMS

Ah rating A capacity rating for batteries determined by multiplying the current (A) times the length of time (h) a battery can deliver that current to a load.

Efficiency The ratio of the output power to the input power of a circuit, usually expressed as a percent.

Energy The ability to do work. The unit is the joule (J).

Half-splitting A troubleshooting procedure where one starts in the middle of a circuit or system and, depending on the first measurement, works toward the output or toward the input to find the fault.

Joule (J) The SI unit of energy.

Kilowatt-hour (kWh) A large unit of energy used mainly by utility companies.

Linear Characterized by a straight-line relationship.

Ohm's law A law stating that current is directly proportional to voltage and inversely proportional to resistance.

www.EngineeringBooksPdf.com

Power The rate of energy usage. The unit is the watt (W).

Power rating The maximum amount of power that a resistor can dissipate without being damaged by excessive heat buildup.

Power supply A device that converts ac from the utility lines to a dc voltage.

Troubleshooting A systematic process of isolating, identifying, and correcting a fault in a circuit or system.

Voltage drop The decrease in voltage across a resistor due to a loss of energy.

Watt (W) The unit of power. One watt is the power when 1 J of energy is used in 1 s.

Watt's law A law that states the relationships of power to current, voltage, and resistance.

FORMULAS

1	$I = \frac{V}{R}$	Form of Ohm's law for calculating current
2	$V = IR$	Form of Ohm's law for calculating voltage
3	$R = \frac{V}{I}$	Form of Ohm's law for calculating resistance
4	$P = \frac{W}{t}$	Power equals energy divided by time.
5	$P = I^2R$	Power equals current squared times resistance.
6	$P = VI$	Power equals voltage times current.
7	$P = \frac{V^2}{R}$	Power equals voltage squared divided by resistance.
8	$\text{Efficiency} = \frac{P_{OUT}}{P_{IN}}$	Power supply efficiency
9	$P_{OUT} = P_{IN} - P_{LOSS}$	Output power

TRUE/FALSE QUIZ

Answers are at the end of the chapter.

1. If the total resistance of a circuit increases, current decreases.
2. Ohm's law for finding resistance is $R = I/V$.
3. When milliamps and kilohms are multiplied together, the result is volts.
4. If a 10 kΩ resistor is connected to a 10 V source, the current in the resistor will be 1 A.
5. The kilowatt-hour is a unit of power.
6. One watt is equal to one joule per second.
7. The power rating of a resistor should always be less than the required power dissipation in the circuit.
8. Within limits, a regulated power supply can automatically keep the output voltage constant even if the load changes.
9. A power supply that has a negative output voltage absorbs power from the load.
10. When analyzing a circuit problem, you should consider the conditions under which it failed.

SELF-TEST

Answers are at the end of the chapter.

1. Ohm's law states that
   - **(a)** current equals voltage times resistance
   - **(b)** voltage equals current times resistance
   - **(c)** resistance equals current divided by voltage
   - **(d)** voltage equals current squared times resistance

www.EngineeringBooksPdf.com

2. When the voltage across a resistor is doubled, the current will
   (a) triple **(b)** halve **(c)** double **(d)** not change
3. When 10 V are applied across a 20 Ω resistor, the current is
   (a) 10 A **(b)** 0.5 A **(c)** 200 A **(d)** 2 A
4. When there are 10 mA of current through a 1.0 kΩ resistor, the voltage across the resistor is
   (a) 100 V **(b)** 0.1 V **(c)** 10 kV **(d)** 10 V
5. If 20 V are applied across a resistor and there are 6.06 mA of current, the resistance is
   (a) 3.3 kΩ **(b)** 33 kΩ **(c)** 330 Ω **(d)** 3.03 kΩ
6. A current of 250 μA through a 4.7 kΩ resistor produces a voltage drop of
   (a) 53.2 V **(b)** 1.175 mV **(c)** 18.8 V **(d)** 1.175 V
7. A resistance of 2.2 MΩ is connected across a 1 kV source. The resulting current is approximately
   (a) 2.2 mA **(b)** 455 μA **(c)** 45.5 μA **(d)** 0.455 A
8. Power can be defined as
   (a) energy **(b)** heat
   (c) the rate at which energy is used **(d)** the time required to use energy
9. For 10 V and 50 mA, the power is
   (a) 500 mW **(b)** 0.5 W **(c)** 500,000 μW **(d)** answers (a), (b), and (c)
10. When the current through a 10 kΩ resistor is 10 mA, the power is
    (a) 1 W **(b)** 10 W **(c)** 100 mW **(d)** 1 mW
11. A 2.2 kΩ resistor dissipates 0.5 W. The current is
    (a) 15.1 mA **(b)** 227 μA **(c)** 1.1 mA **(d)** 4.4 mA
12. A 330 Ω resistor dissipates 2 W. The voltage is
    (a) 2.57 V **(b)** 660 V **(c)** 6.6 V **(d)** 25.7 V
13. The power rating of a resistor that is to handle up to 1.1 W should be
    (a) 0.25 W **(b)** 1 W **(c)** 2 W **(d)** 5 W
14. A 22 Ω half-watt resistor and a 220 Ω half-watt resistor are connected across a 10 V source. Which one(s) will overheat?
    (a) 22 Ω **(b)** 220 Ω **(c)** both **(d)** neither
15. When the needle of an analog ohmmeter indicates infinity, the resistor being measured is
    (a) overheated **(b)** shorted **(c)** open **(d)** reversed

TROUBLESHOOTING: SYMPTOM AND CAUSE

The purpose of these exercises is to help develop thought processes essential to troubleshooting. Answers are at the end of the chapter.

Determine the cause for each set of symptoms. Refer to Figure 27.

▶ FIGURE 27

The meters indicate the correct readings for this circuit.

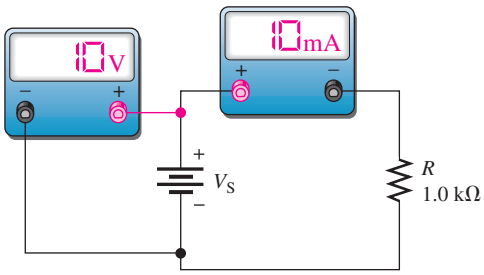

1. *Symptom:* The ammeter reading is zero, and the voltmeter reading is 10 V.
   Cause:
   (a) *R* is shorted.
   (b) *R* is open.
   (c) The voltage source is faulty.

www.EngineeringBooksPdf.com

2. *Symptom:* The ammeter reading is zero, and the voltmeter reading is 0 V.
   Cause:
   (a) R is open.
   (b) R is shorted.
   (c) The voltage source is turned off or faulty.
3. *Symptom:* The ammeter reading is 10 mA, and the voltmeter reading is 0 V.
   Cause:
   (a) The voltmeter is defective.
   (b) The ammeter is faulty.
   (c) The voltage source is turned off or faulty.
4. *Symptom:* The ammeter reading is 1 mA, and the voltmeter reading is 10 V.
   Cause:
   (a) The voltmeter is defective.
   (b) The resistor value is higher than it should be.
   (c) The resistor value is lower than it should be.
5. *Symptom:* The ammeter reading is 100 mA, and the voltmeter reading is 10 V.
   Cause:
   (a) The voltmeter is defective.
   (b) The resistor value is higher than it should be.
   (c) The resistor value is lower than it should be.

PROBLEMS

Answers to odd-numbered problems are at the end of the chapter.

BASIC PROBLEMS

SECTION 1 Ohm's Law

1. The current in a circuit is 1 A. Determine what the current will be when
   (a) the voltage is tripled
   (b) the voltage is reduced by 80%
   (c) the voltage is increased by 50%
2. The current in a circuit is 100 mA. Determine what the current will be when
   (a) the resistance is increased by 100%
   (b) the resistance is reduced by 30%
   (c) the resistance is quadrupled
3. The current in a circuit is 10 mA. What will the current be if the voltage is tripled and the resistance is doubled?

SECTION 2 Application of Ohm's Law

4. Determine the current in each case.
   (a) $V = 5\text{ V}, R = 1.0\,\Omega$
   (b) $V = 15\text{ V}, R = 10\,\Omega$
   (c) $V = 50\text{ V}, R = 100\,\Omega$
   (d) $V = 30\text{ V}, R = 15\text{ k}\Omega$
   (e) $V = 250\text{ V}, R = 4.7\text{ M}\Omega$
5. Determine the current in each case.
   (a) $V = 9\text{ V}, R = 2.7\text{ k}\Omega$
   (b) $V = 5.5\text{ V}, R = 10\text{ k}\Omega$
   (c) $V = 40\text{ V}, R = 68\text{ k}\Omega$
   (d) $V = 1\text{ kV}, R = 2\text{ k}\Omega$
   (e) $V = 66\text{ kV}, R = 10\text{ M}\Omega$
6. A 10 Ω resistor is connected across a 12 V battery. How much current is there through the resistor?
7. A resistor is connected across the terminals of a dc voltage source in each part of Figure 28. Determine the current in each resistor.

www.EngineeringBooksPdf.com

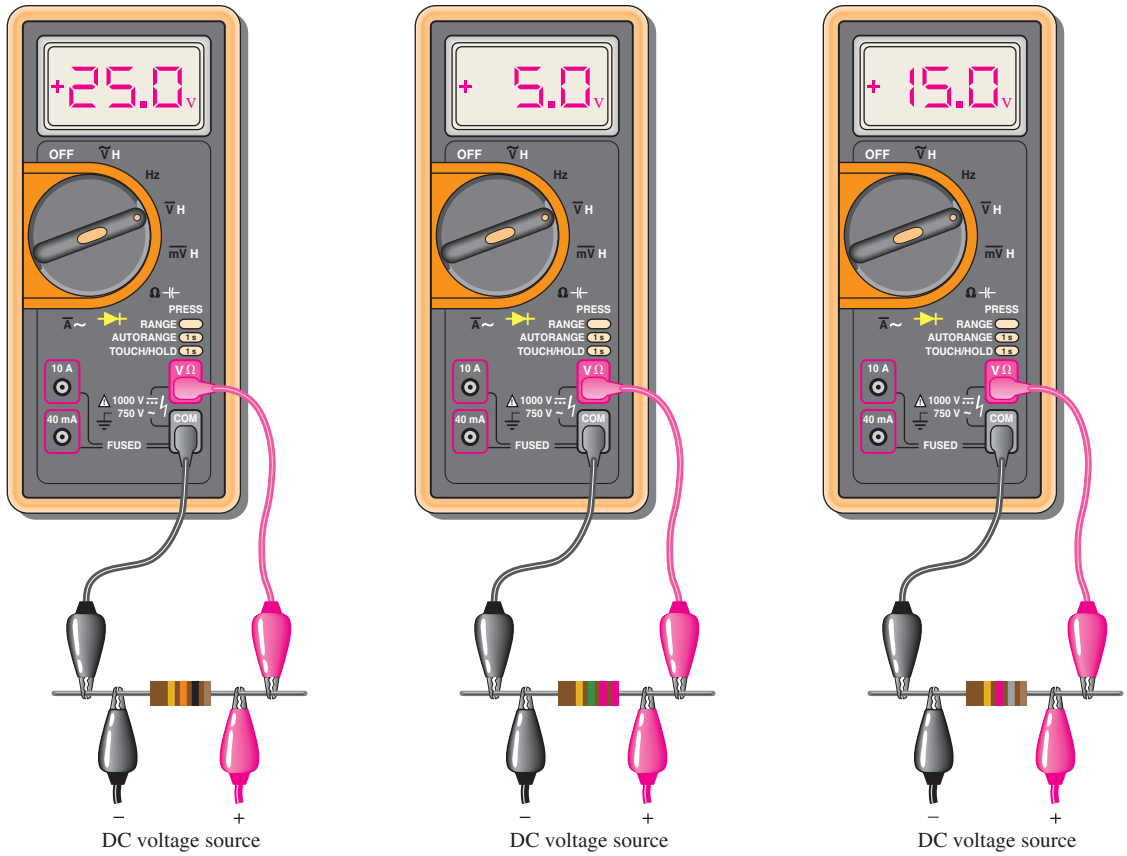

(a) (b) (c)

▲ FIGURE 28

8. A 5-band resistor is connected across a 12 V source. Determine the current if the resistor color code is orange, violet, yellow, gold, brown.

9. If the voltage in Problem 8 is doubled, will a 0.5 A fuse blow? Explain your answer.

10. Calculate the voltage for each value of I and R.

(a) $I = 2\text{ A}, R = 18\ \Omega$

(b) $I = 5\text{ A}, R = 47\ \Omega$

(c) $I = 2.5\text{ A}, R = 620\ \Omega$

(d) $I = 0.6\text{ A}, R = 47\ \Omega$

(e) $I = 0.1\text{ A}, R = 470\ \Omega$

11. Calculate the voltage for each value of I and R.

(a) $I = 1\text{ mA}, R = 10\ \Omega$

(b) $I = 50\text{ mA}, R = 33\ \Omega$

(c) $I = 3\text{ A}, R = 4.7\text{ k}\Omega$

(d) $I = 1.6\text{ mA}, R = 2.2\text{ k}\Omega$

(e) $I = 250\ \mu\text{A}, R = 1.0\text{ k}\Omega$

(f) $I = 500\text{ mA}, R = 1.5\text{ M}\Omega$

(g) $I = 850\ \mu\text{A}, R = 10\text{ M}\Omega$

(h) $I = 75\ \mu\text{A}, R = 47\ \Omega$

12. Three amperes of current are measured through a 27 Ω resistor connected across a voltage source. How much voltage does the source produce?

www.EngineeringBooksPdf.com

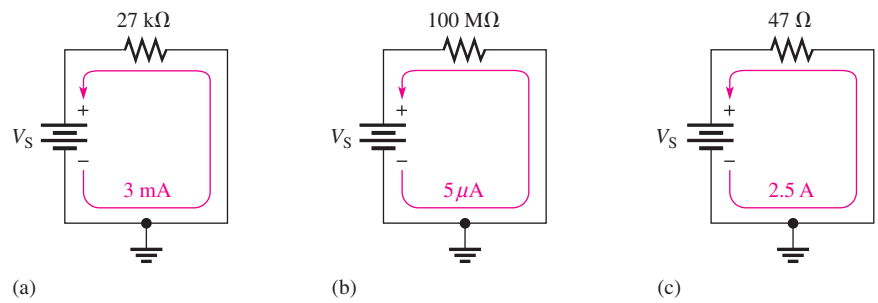

▲ FIGURE 29

13. Assign a voltage value to each source in the circuits of Figure 29 to obtain the indicated amounts of current.

14. Calculate the resistance for each value of V and I.

(a) $V = 10\text{ V}, I = 2\text{ A}$

(b) $V = 90\text{ V}, I = 45\text{ A}$

(c) $V = 50\text{ V}, I = 5\text{ A}$

(d) $V = 5.5\text{ V}, I = 10\text{ A}$

(e) $V = 150\text{ V}, I = 0.5\text{ A}$

15. Calculate R for each set of V and I values.

(a) $V = 10\text{ kV}, I = 5\text{ A}$

(b) $V = 7\text{ V}, I = 2\text{ mA}$

(c) $V = 500\text{ V}, I = 250\text{ mA}$

(d) $V = 50\text{ V}, I = 500\ \mu\text{A}$

(e) $V = 1\text{ kV}, I = 1\text{ mA}$

16. Six volts are applied across a resistor. A current of 2 mA is measured. What is the value of the resistor?

17. Choose the correct value of resistance to get the current values indicated in each circuit of Figure 30.

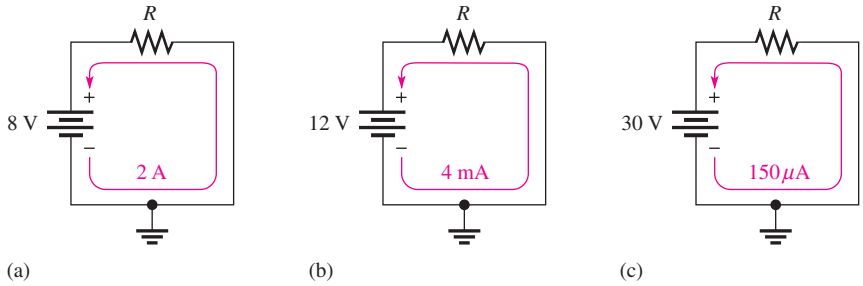

▲ FIGURE 30

18. A flashlight is operated from 3.2 V and has a resistance of 3.9 Ω when the filament is hot. What current is supplied by the batteries?

SECTION 3 Energy and Power

19. The flashlight in Problem 18 uses 26 J in 10 s. What is the power in watts?

20. What is the power when energy is used at the rate of 350 J/s?

21. What is the power in watts when 7500 J of energy are used in 5 h?

22. Convert the following to kilowatts:

(a) 1000 W **(b)** 3750 W **(c)** 160 W **(d)** 50,000 W

www.EngineeringBooksPdf.com

23. Convert the following to megawatts:

(a) 1,000,000 W **(b)** 3×10^6 W **(c)** 15×10^7 W **(d)** 8700 kW

24. Convert the following to milliwatts:

(a) 1 W **(b)** 0.4 W **(c)** 0.002 W **(d)** 0.0125 W

25. Convert the following to microwatts:

(a) 2 W **(b)** 0.0005 W **(c)** 0.25 mW **(d)** 0.00667 mW

26. Convert the following to watts:

(a) 1.5 kW **(b)** 0.5 MW **(c)** 350 mW **(d)** 9000 μW

27. Prove that the unit for power (the watt) is equivalent to 1 V $\times$ 1 A.

28. Show that there are 3.6×10^6 joules in a kilowatt-hour.

SECTION 4 Power in an Electric Circuit

29. If a resistor has 5.5 V across it and 3 mA through it, what is the power dissipation?

30. An electric heater works on 115 V and draws 3 A of current. How much power does it use?

31. What is the power when there are 500 mA of current through a 4.7 kΩ resistor?

32. Calculate the power dissipated by a 10 kΩ resistor carrying 100 μA.

33. If there are 60 V across a 620 Ω resistor, what is the power dissipation?

34. A 56 Ω resistor is connected across the terminals of a 1.5 V battery. What is the power dissipation in the resistor?

35. If a resistor is to carry 2 A of current and handle 100 W of power, how many ohms must it be? Assume that the voltage can be adjusted to any required value.

36. Convert 5×10^6 watts used for 1 minute to kWh.

37. Convert 6700 watts used for 1 second to kWh.

38. How many kilowatt-hours do 50 W used for 12 h equal?

39. Assume that an alkaline D-cell battery can maintain an average voltage of 1.25 V for 90 h in a 10 Ω load before becoming unusable. What average power is delivered to the load during the life of the battery?

40. What is the total energy in joules that is delivered during the 90 hours for the battery in Problem 39?

SECTION 5 The Power Rating of Resistors

41. A 6.8 kΩ resistor has burned out in a circuit. You must replace it with another resistor with the same resistance value. If the resistor carries 10 mA, what should its power rating be? Assume that you have available resistors in all the standard power ratings.

42. A certain type of power resistor comes in the following ratings: 3 W, 5 W, 8 W, 12 W, 20 W. Your particular application requires a resistor that can handle approximately 8 W. Which rating would you use for a minimum safety margin of 20% above the rated value? Why?

SECTION 6 Energy Conversion and Voltage Drop in a Resistance

43. For each circuit in Figure 31, assign the proper polarity for the voltage across the resistor.

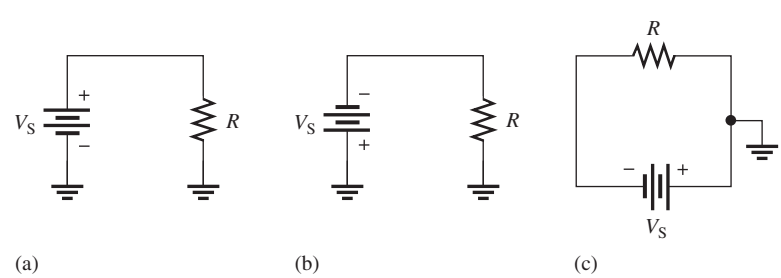

▲ FIGURE 31

www.EngineeringBooksPdf.com

SECTION 7 Power Supplies and Batteries

44. A 50 Ω load consumes 1 W of power. What is the output voltage of the power supply?

45. A battery can provide an average of 1.5 A of current for 24 h. What is its ampere-hour rating?

46. How much average current can be drawn from an 80 Ah battery for 10 h?

47. If a battery is rated at 650 mAh, how much average current will it provide for 48 h?

48. If the input power is 500 mW and the output power is 400 mW, what is the power loss? What is the efficiency of this power supply?

49. To operate at 85% efficiency, how much output power must a source produce if the input power is 5 W?

SECTION 8 Introduction to Troubleshooting

50. In the light circuit of Figure 32, identify the faulty bulb based on the series of ohmmeter readings shown.

51. Assume you have a 32-light string and one of the bulbs is burned out. Using the half-splitting approach and starting in the left half of the circuit, how many resistance measurements will it take to find the faulty bulb if it is seventeenth from the left.

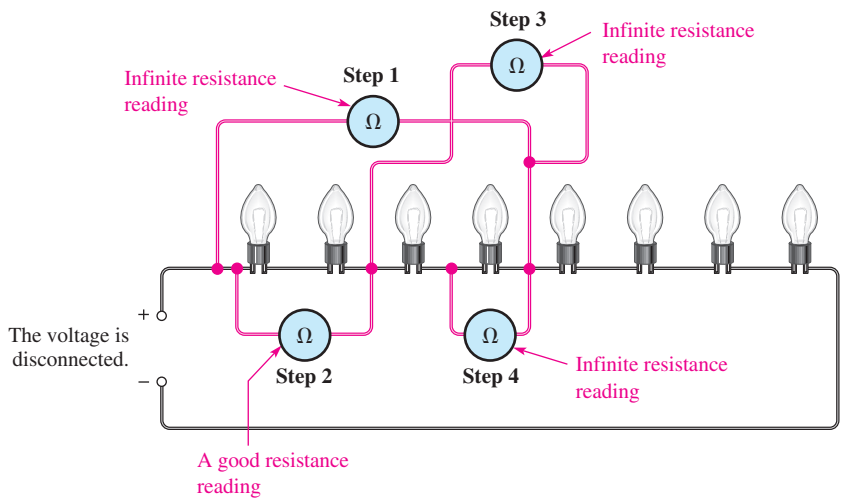

▲ FIGURE 32

ADVANCED PROBLEMS

52. A certain power supply provides a continuous 2 W to a load. It is operating at 60% efficiency. In a 24 h period, how many kilowatt-hours does the power supply use?

53. The filament of a light bulb in the circuit of Figure 33(a) has a certain amount of resistance, represented by an equivalent resistance in Figure 33(b). If the bulb operates with 120 V and 0.8 A of current, what is the resistance of its filament?

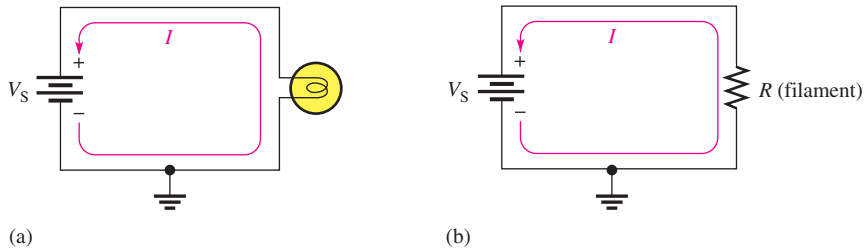

▲ FIGURE 33

www.EngineeringBooksPdf.com

54. A certain electrical device has an unknown resistance. You have available a 12 V battery and an ammeter. How would you determine the value of the unknown resistance? Draw the necessary circuit connections.

55. A variable voltage source is connected to the circuit of Figure 34. Start at 0 V and increase the voltage in 10 V steps up to 100 V. Determine the current at each voltage value, and plot a graph of V versus I. Is the graph a straight line? What does the graph indicate?

56. In a certain circuit, $V_S = 1$ V and $I = 5$ mA. Determine the current for each of the following voltages in a circuit with the same resistance:

(a) $V_S = 1.5$ V

(b) $V_S = 2$ V

(c) $V_S = 3$ V

(d) $V_S = 4$ V

(e) $V_S = 10$ V

57. Figure 35 is a graph of current versus voltage for three resistance values. Determine R_1, R_2, and R_3.

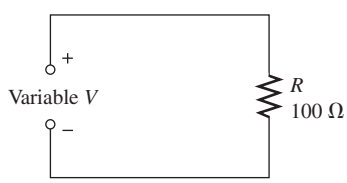

▲ FIGURE 34

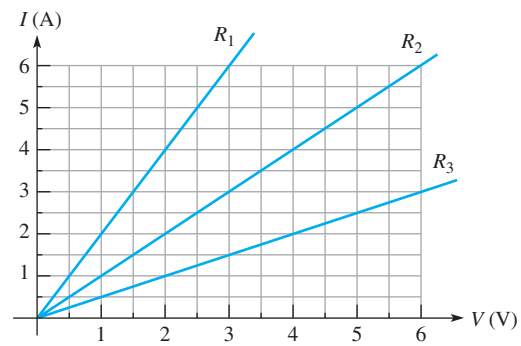

▲ FIGURE 35

58. You are measuring the current in a circuit that is operated on a 10 V battery. The ammeter reads 50 mA. Later, you notice that the current has dropped to 30 mA. Eliminating the possibility of a resistance change, you must conclude that the voltage has changed. How much has the voltage of the battery changed, and what is its new value?

59. If you wish to increase the amount of current in a resistor from 100 mA to 150 mA by changing the 20 V source, by how many volts should you change the source? To what new value should you set it?

60. A 6 V source is connected to a 100 Ω resistor by two 12 ft lengths of 18-gauge copper wire. Refer to Table 3 at the end of the chapter to determine the following:

(a) current **(b)** resistor voltage **(c)** voltage across each length of wire

61. If a 300 W bulb is allowed to burn continuously for 30 days, how many kilowatt-hours of energy does it use?

62. At the end of a 31-day period, your utility bill shows that you have used 1500 kWh. What is the average daily power?

63. A certain type of power resistor comes in the following ratings: 3 W, 5 W, 8 W, 12 W, 20 W. Your particular application requires a resistor that can handle approximately 10 W. Which rating would you use? Why?

64. A 12 V source is connected across a 10 Ω resistor for 2 min.

(a) What is the power dissipation?

(b) How much energy is used?

(c) If the resistor remains connected for an additional minute, does the power dissipation increase or decrease?

www.EngineeringBooksPdf.com

65. The rheostat in Figure 36 is used to control the current to a heating element. When the rheostat is adjusted to a value of 8 Ω or less, the heating element can burn out. What is the rated value of the fuse needed to protect the circuit if the voltage across the heating element at the point of maximum current is 100 V?

▶ FIGURE 36

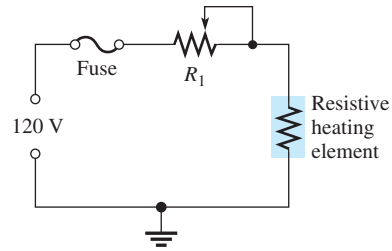

MULTISIM TROUBLESHOOTING PROBLEMS

66. Open file P03-66; files are found at www.pearsonhighered.com/floyd/. Determine whether or not the circuit is operating properly. If not, find the fault.

67. Open file P03-67. Determine whether or not the circuit is operating properly. If not, find the fault.

68. Open file P03-68. Determine whether or not the circuit is operating properly. If not, find the fault.

69. Open file P03-69. Determine whether or not the circuit is operating properly. If not, find the fault.

70. Open file P03-70. Determine whether or not the circuit is operating properly. If not, find the fault.

ANSWERS

SECTION CHECKUPS

SECTION 1 Ohm's Law

1. Ohm's law states that current varies directly with voltage and inversely with resistance.

2. $I = V/R$ **3.** $V = IR$ **4.** $R = V/I$

5. The current increases; three times when V is tripled

6. Doubling R cuts I in half to 5 mA.

7. No change in I if V and R are doubled.

SECTION 2 Application of Ohm's Law

1. $I = 10\text{ V}/4.7\ \Omega = 2.13\text{ A}$

2. $I = 20\text{ kV}/4.7\text{ M}\Omega = 4.26\text{ mA}$

3. $I = 10\text{ kV}/2\text{ k}\Omega = 5\text{ A}$

4. $V = (1\text{ A})(10\ \Omega) = 10\text{ V}$

5. $V = (3\text{ mA})(3\text{ k}\Omega) = 9\text{ V}$

6. $V = (2\text{ A})(6\ \Omega) = 12\text{ V}$

7. $R = 10\text{ V}/2\text{ A} = 5\ \Omega$

8. $R = 25\text{ V}/50\text{ mA} = 0.5\text{ k}\Omega = 500\ \Omega$

SECTION 3 Energy and Power

1. Power is the rate at which energy is used.

2. $P = W/t$

3. Watt is the unit of power. One watt is the power when 1 J of energy is used in 1 s.

4. **(a)** 68,000 W = 68 kW **(b)** 0.005 W = 5 mW **(c)** 0.000025 = 25 μW

5. (100 W)(10 h) = 1 kWh

6. 2000 W = 2 kW

7. (1.322 kW)(24 h) = 31.73 kWh; (0.11 \$/kWh)(31.73 kWh) = \$3.49

www.EngineeringBooksPdf.com

SECTION 4 Power in an Electric Circuit

1. $P = IV = (12\text{ A})(13\text{ V}) = 156\text{ W}$
2. $P = (5\text{ A})^2(47\ \Omega) = 1175\text{ W}$
3. $V = \sqrt{PR} = \sqrt{(2\text{ W})(50\ \Omega)} = 10\text{ V}$
4. $P = \dfrac{V^2}{R} = \dfrac{(13.4\text{ V})^2}{3.0\ \Omega} = 60\text{ W}$
5. $P = (8\text{ V})^2/2.2\text{ k}\Omega = 29.1\text{ mW}$
6. $R = 55\text{ W}/(0.5\text{ A})^2 = 220\ \Omega$

SECTION 5 The Power Rating of Resistors

1. Two resistor parameters are resistance and power rating.
2. A larger resistor physical size dissipates more energy.
3. Standard ratings of metal-film resistors are 0.125 W, 0.25 W, 0.5 W, and 1 W.
4. At least a 0.5 W rating to handle 0.3 W
5. 5.0 V

SECTION 6 Energy Conversion and Voltage Drop in a Resistance

1. Energy conversion in a resistor is caused by collisions of free electrons with the atoms in the material.
2. Voltage drop is a decrease in voltage across a resistor due to a loss of energy.
3. Voltage drop is negative to positive in the direction of current.

SECTION 7 Power Supplies and Batteries

1. An increased amount of current represents a greater load.
2. $P_{OUT} = (10\text{ V})(0.5\text{ A}) = 5\text{ W}$
3. $100\text{ Ah}/5\text{ A} = 20\text{ h}$
4. $P_{OUT} = (12\text{ V})(5\text{ A}) = 60\text{ W}$
5. Efficiency $= (750\text{ mW}/1000\text{ mW})100\% = 75\%$

SECTION 8 Introduction to Troubleshooting

1. Analysis, Planning, and Measuring
2. Half-splitting identifies the fault by successively isolating half of the remaining circuit.
3. Voltage is measured across a component. Current is measured in series with the component.

RELATED PROBLEMS FOR EXAMPLES

1 $I_1 = 10\text{ V}/5\ \Omega = 2\text{ A}; I_2 = 10\text{ V}/20\ \Omega = 0.5\text{ A}$

2 1 V

3 970 mΩ

4 Yes

5 11.1 mA

6 5 mA

7 25 μA

8 200 μA

9 800 V

10 220 mV

11 16.5 V

12 Voltage drops to 1.08 V.

13 6.0 Ω

www.EngineeringBooksPdf.com

14 39.5 kΩ
15 3000 J
16 **(a)** 0.001 W **(b)** 0.0018 W **(c)** 3,000,000 W **(d)** 10,000 W
17 2 kWh
18 \$4.92 + \$0.07 = \$4.99
19 **(a)** 40 W **(b)** 376 W **(c)** 625 mW
20 26 W
21 0.5 W (½ W)
22 No
23 77 W
24 46 W
25 60 Ah

TRUE/FALSE QUIZ

1. T **2.** F **3.** T **4.** F **5.** F **6.** T **7.** F **8.** T
9. F **10.** T

SELF-TEST

1. (b) **2.** (c) **3.** (b) **4.** (d) **5.** (a) **6.** (d) **7.** (b) **8.** (c)
9. (d) **10.** (a) **11.** (a) **12.** (d) **13.** (c) **14.** (a) **15.** (c)

TROUBLESHOOTING: SYMPTOM AND CAUSE

1. (b)
2. (c)
3. (a)
4. (b)
5. (c)

PROBLEMS – ODD-NUMBERED ANSWERS

1. **(a)** 3 A **(b)** 0.2 A **(c)** 1.5 A
3. 15 mA
5. **(a)** 3.33 mA **(b)** 550 μA **(c)** 588 μA
(d) 500 mA **(e)** 6.60 mA
7. **(a)** 2.50 mA **(b)** 2.27 μA **(c)** 8.33 mA
9. I = 0.642 A, so the 0.5 A fuse will blow.
11. **(a)** 10 mV **(b)** 1.65 V **(c)** 14.1 kV
(d) 3.52 V **(e)** 250 mV **(f)** 750 kV
(g) 8.5 kV **(h)** 3.53 mV
13. **(a)** 81 V **(b)** 500 V **(c)** 117.5 V
15. **(a)** 2 kΩ **(b)** 3.5 kΩ **(c)** 2 kΩ
(d) 100 kΩ **(e)** 1 MΩ
17. **(a)** 4 Ω **(b)** 3 kΩ **(c)** 200 kΩ
19. 2.6 W
21. 417 mW
23. **(a)** 1 MW **(b)** 3 MW **(c)** 150 MW **(d)** 8.7 MW
25. **(a)** 2,000,000 μW **(b)** 500 μW
(c) 250 μW **(d)** 6.67 μW

www.EngineeringBooksPdf.com

27. $P = W/t$ in watts; $V = W/Q$; $I = Q/t$. $P = VI = W/t$, so (1 V)(1 A) = 1 watt

29. 16.5 mW

31. 1.18 kW

33. 5.81 W

35. 25 Ω

37. 0.00186 kWh

39. 156 mW

41. 1 W

43. **(a)** positive at top **(b)** positive at bottom **(c)** positive at right

45. 36 Ah

47. 13.5 mA

49. 4.25 W

51. Five

53. 150 Ω

55. $V = 0$ V, $I = 0$ A; $V = 10$ V, $I = 100$ mA; $V = 20$ V, $I = 200$ mA; $V = 30$ V, $I = 300$ mA; $V = 40$ V, $I = 400$ mA; $V = 50$ V, $I = 500$ mA; $V = 60$ V, $I = 600$ mA; $V = 70$ V, $I = 700$ mA; $V = 80$ V, $I = 800$ mA; $V = 90$ V, $I = 900$ mA; $V = 100$ V, $I = 1$ A

57. $R_1 = 0.5\ \Omega$; $R_2 = 1\ \Omega$; $R_3 = 2\ \Omega$

59. 10 V; 30 V

61. 216 kWh

63. 12 W

65. 2.5 A

67. No fault

69. Lamp 4 is shorted.

www.EngineeringBooksPdf.com

▼ TABLE 3

AWG (American Wire Gauge) sizes and resistances for solid round copper.

AWG #	AREA (CM)	RESISTANCE (Ω/1000 FT AT 20°C)	AWG #	AREA (CM)	RESISTANCE (Ω/1000 FT AT 20°C)
0000	211,600	0.0490	19	1,288.1	8.051
000	167,810	0.0618	20	1,021.5	10.15
00	133,080	0.0780	21	810.10	12.80
0	105,530	0.0983	22	642.40	16.14
1	83,694	0.1240	23	509.45	20.36
2	66,373	0.1563	24	404.01	25.67
3	52,634	0.1970	25	320.40	32.37
4	41,742	0.2485	26	254.10	40.81
5	33,102	0.3133	27	201.50	51.47
6	26,250	0.3951	28	159.79	64.90
7	20,816	0.4982	29	126.72	81.83
8	16,509	0.6282	30	100.50	103.2
9	13,094	0.7921	31	79.70	130.1
10	10,381	0.9989	32	63.21	164.1
11	8,234.0	1.260	33	50.13	206.9
12	6,529.0	1.588	34	39.75	260.9
13	5,178.4	2.003	35	31.52	329.0
14	4,106.8	2.525	36	25.00	414.8
15	3,256.7	3.184	37	19.83	523.1
16	2,582.9	4.016	38	15.72	659.6
17	2,048.2	5.064	39	12.47	831.8
18	1,624.3	6.385	40	9.89	1049.0

PHOTO CREDITS FOR REOCCURRING IMAGES

CD Icon: Stockbyte/Getty Images; **Computer Chips:** Photodisc/Thinkstock; **Computer:** Jeff Maloney/Photodisc/Getty Images; **Fiber Optic:** discpicture/Shutterstock.

www.EngineeringBooksPdf.com

Series Circuits

CHAPTER OUTLINE

1 Resistors in Series
2 Total Series Resistance
3 Current in a Series Circuit
4 Application of Ohm's Law
5 Voltage Sources in Series
6 Kirchhoff's Voltage Law
7 Voltage Dividers
8 Power in Series Circuits
9 Voltage Measurements
10 Troubleshooting
Application Assignment: Putting Your Knowledge to Work

CHAPTER OBJECTIVES

- Identify a series resistive circuit
- Determine total series resistance
- Determine the current throughout a series circuit
- Apply Ohm's law in series circuits
- Determine the total effect of voltage sources connected in series
- Apply Kirchhoff's voltage law
- Use a series circuit as a voltage divider
- Determine power in a series circuit
- State how to measure voltage with respect to ground
- Troubleshoot series circuits

KEY TERMS

- Series
- Series-aiding
- Series-opposing
- Kirchhoff's voltage law
- Voltage divider
- Reference ground
- Open
- Short

APPLICATION ASSIGNMENT PREVIEW

For the application assignment in this chapter, a voltage-divider board will be evaluated and modified if necessary. The voltage divider provides five different voltage levels from a 12 V battery. The voltage divider will be used to supply positive reference voltages to an electronic circuit in an analog-to-digital converter. You will check the circuit to see if it provides the required voltages and, if not, modify it so that it does. Also, the power ratings of the resistors must be adequate for the application. After studying this chapter, you should be able to complete the application assignment.

VISIT THE COMPANION WEBSITE

Study aids for this chapter are available at http://www.pearsonhighered.com/floyd/

INTRODUCTION

Resistive circuits can be of two basic forms: series or parallel. In this chapter series circuits are discussed. In this chapter you will see how Ohm's law is used in series circuits; and you will study another important law, Kirchhoff's voltage law. Also, several important applications of series circuits are presented.

Streeter Photography/Alamy

From Chapter 4 of *Electronics Fundamentals: Circuits, Devices, and Applications*, Eighth Edition, Thomas L. Floyd, David M. Buchla. Copyright © 2010 by Pearson Education, Inc. Published by Pearson Prentice Hall. All rights reserved.

www.EngineeringBooksPdf.com

1 RESISTORS IN SERIES

When connected in series, resistors form a "string" in which there is only one path for current.

After completing this section, you should be able to

- **Identify a series resistive circuit**
  - Translate a physical arrangement of resistors into a schematic diagram

Figure 1(a) shows two resistors connected in series between point A and point B. Part (b) shows three resistors in series, and part (c) shows four in series. Of course, there can be any number of resistors in series.

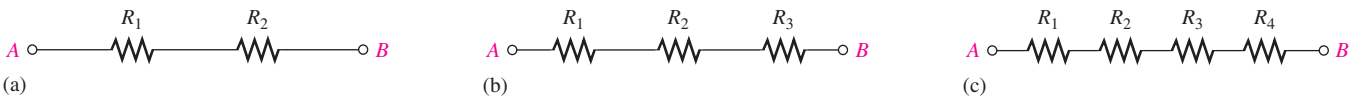

▲ **FIGURE 1**

Resistors in series.

When a voltage source is connected from point A to point B, the only way for current to get from one point to the other in any of the connections of Figure 1 is to go through each of the resistors. A series circuit is identified as follows:

A series circuit provides only one path for current between two points so that the current is the same through each series resistor.

In an actual circuit diagram, a series circuit may not always be as easy to identify as those in Figure 1. For example, Figure 2 shows series resistors drawn in other ways with a voltage applied. Remember, if there is only one current path between two points, the resistors between those two points are in series, no matter how they appear in a diagram.

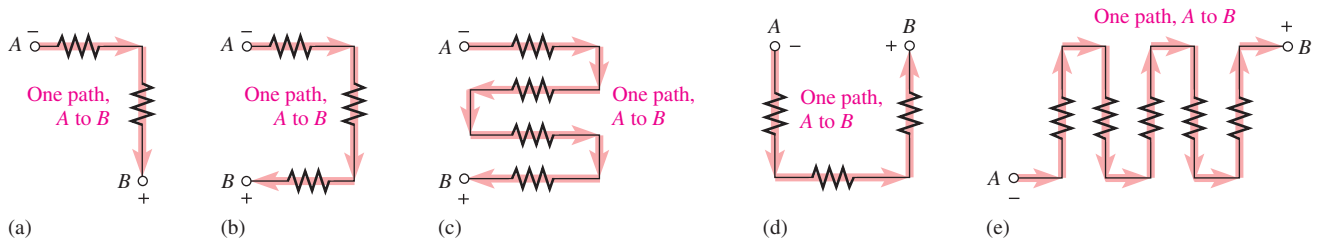

▲ **FIGURE 2**

Some examples of series connections of resistors. Notice that the current must be the same at all points because the current has only one path.

EXAMPLE 1

Five resistors are positioned on a protoboard as shown in Figure 3. Wire them together in series so that, starting from the negative (−) terminal, R_1 is first, R_2 is second, R_3 is third, and so on. Draw a schematic showing this connection.

This icon indicates selected websites for further information on topics in this section. See the Companion Website provided with this text.

www.EngineeringBooksPdf.com

▶ FIGURE 3

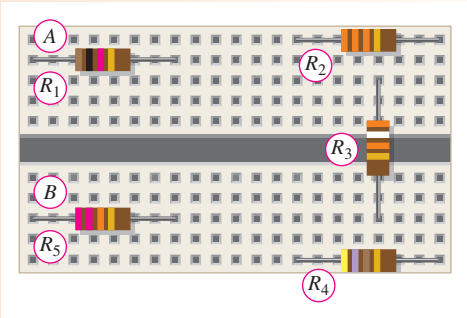

Solution The wires are connected as shown in Figure 4(a), which is the assembly diagram. The schematic is shown in Figure 4(b). Note that the schematic does not necessarily show the actual physical arrangement of the resistors as does the assembly diagram. The schematic shows how components are connected electrically; the assembly diagram shows how components are arranged and interconnected physically.

▶ FIGURE 4

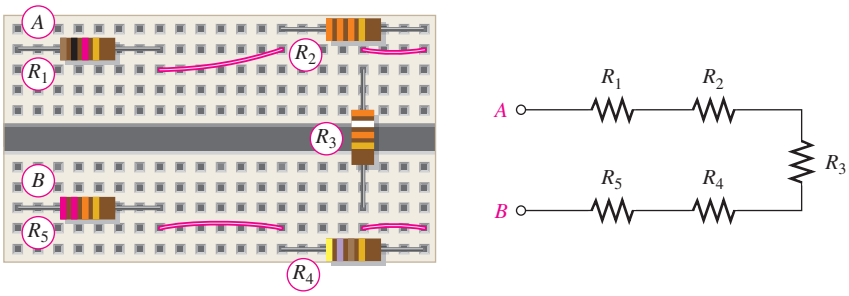

(a) Assembly diagram (b) Schematic

*Related Problem** **(a)** Show how you would rewire the circuit board in Figure 4(a) so that all the odd-numbered resistors come first starting at point *A* followed by the even-numbered ones.
(b) Determine the value of each resistor.

*Answers are at the end of the chapter.

EXAMPLE 2

Describe how the resistors on the printed circuit (PC) board in Figure 5 are related electrically. Determine the resistance value of each resistor.

▶ FIGURE 5

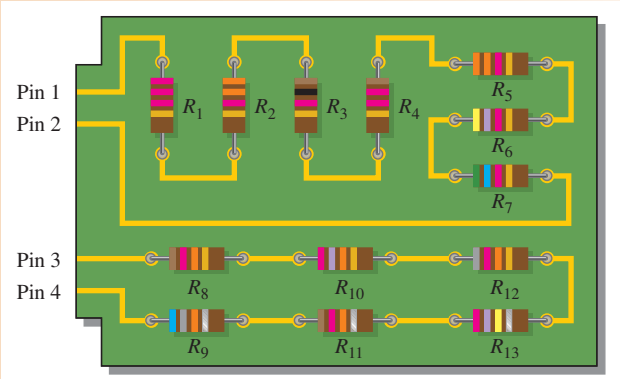

www.EngineeringBooksPdf.com

Solution Resistors R_1 through R_7 are in series with each other. This series combination is connected between pins 1 and 2 on the PC board.

Resistors R_8 through R_{13} are in series with each other. This series combination is connected between pins 3 and 4 on the PC board.

The values of the resistors are $R_1 = 2.2\,\text{k}\Omega$, $R_2 = 3.3\,\text{k}\Omega$, $R_3 = 1.0\,\text{k}\Omega$, $R_4 = 1.2\,\text{k}\Omega$, $R_5 = 3.3\,\text{k}\Omega$, $R_6 = 4.7\,\text{k}\Omega$, $R_7 = 5.6\,\text{k}\Omega$, $R_8 = 12\,\text{k}\Omega$, $R_9 = 68\,\text{k}\Omega$, $R_{10} = 27\,\text{k}\Omega$, $R_{11} = 12\,\text{k}\Omega$, $R_{12} = 82\,\text{k}\Omega$, and $R_{13} = 270\,\text{k}\Omega$.

Related Problem How is the circuit in Figure 5 changed when pin 2 and pin 3 are connected?

SECTION 1 CHECKUP
Answers are at the end of the chapter.

1. How are the resistors connected in a series circuit?
2. How can you identify a series circuit?
3. Complete the schematics for the circuits in each part of Figure 6 by connecting the resistors in series in numerical order from *A* to *B*.
4. Now connect each group of series resistors in Figure 6 in series.

▶ **FIGURE 6**

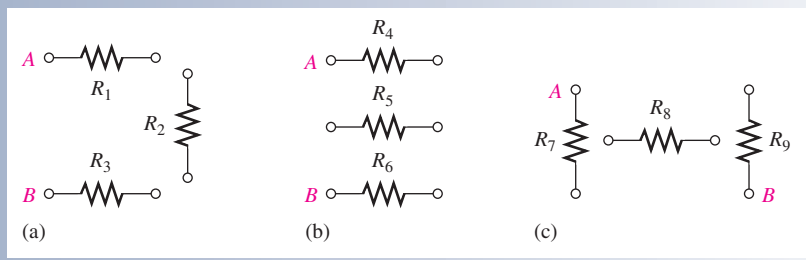

2 TOTAL SERIES RESISTANCE

The total resistance of a series circuit is equal to the sum of the resistances of each individual resistor.

After completing this section, you should be able to

- **Determine total series resistance**
  - Explain why resistance values add when resistors are connected in series
  - Apply the series resistance formula

Series Resistor Values Add

When resistors are connected in series, the resistor values add because each resistor offers opposition to the current in direct proportion to its resistance. A greater number of resistors connected in series creates more opposition to current. More opposition to current implies a higher value of resistance. Thus, for every resistor that is added in series, the total resistance increases.

www.EngineeringBooksPdf.com

Figure 7 illustrates how series resistances add together to increase the total resistance. Part (a) has a single 10 Ω resistor. Part (b) shows another 10 Ω resistor connected in series with the first one, making a total resistance of 20 Ω. If a third 10 Ω resistor is connected in series with the first two, as shown in part (c), the total resistance becomes 30 Ω.

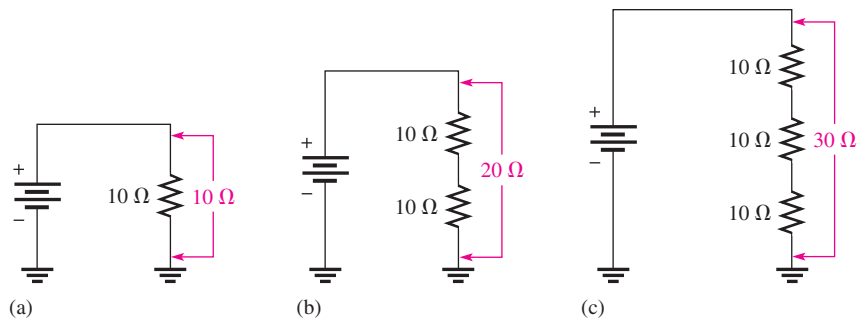

▲ **FIGURE 7**

Total resistance increases with each additional series resistor.

Series Resistance Formula

For any number of individual resistors connected in series, the total resistance is the sum of each of the individual values.

$$R_T = R_1 + R_2 + R_3 + \cdots + R_n$$ **Equation 1**

where R_T is the total resistance and R_n is the last resistor in the series string (n can be any positive integer equal to the number of resistors in series). For example, if there are four resistors in series ($n = 4$), the total resistance formula is

$$R_T = R_1 + R_2 + R_3 + R_4$$

If there are six resistors in series ($n = 6$), the total resistance formula is

$$R_T = R_1 + R_2 + R_3 + R_4 + R_5 + R_6$$

To illustrate the calculation of total series resistance, let's determine R_T of the circuit of Figure 8, where V_S is the source voltage. This circuit has five resistors in series. To find the total resistance, simply add the values.

$$R_T = 56\,\Omega + 100\,\Omega + 27\,\Omega + 10\,\Omega + 47\,\Omega = 240\,\Omega$$

Note in Figure 8 that the order in which the resistances are added does not matter. Also, you can physically change the positions of the resistors in the circuit without affecting the total resistance or the current.

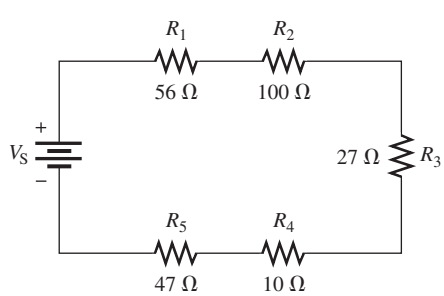

◀ **FIGURE 8**

Example of five resistors in series. V_S stands for source voltage.

www.EngineeringBooksPdf.com

EXAMPLE 3

Connect the resistors on the protoboard in Figure 9 in series, and determine the total resistance, R_T, from the color codes.

▶ FIGURE 9

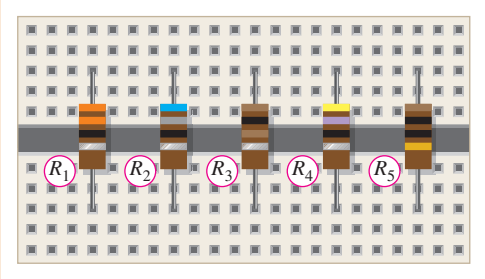

Solution The resistors are connected as shown in Figure 10. Find the total resistance by adding all the values.

$$R_T = R_1 + R_2 + R_3 + R_4 + R_5 = 33\,\Omega + 68\,\Omega + 100\,\Omega + 47\,\Omega + 10\,\Omega = \mathbf{258\,\Omega}$$

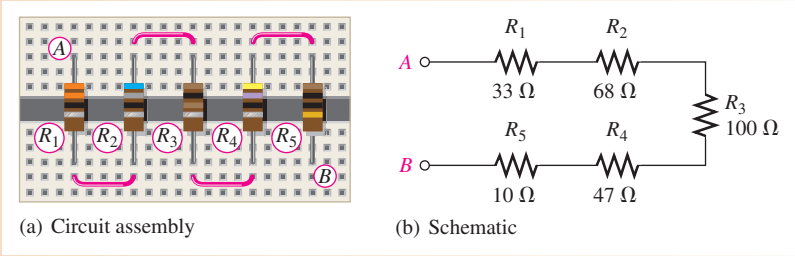

(a) Circuit assembly (b) Schematic

▲ FIGURE 10

Related Problem Determine the total resistance in Figure 10(a) if the positions of R_2 and R_4 are interchanged.

EXAMPLE 4

Calculate the total resistance, R_T, for each circuit in Figure 11.

▶ FIGURE 11

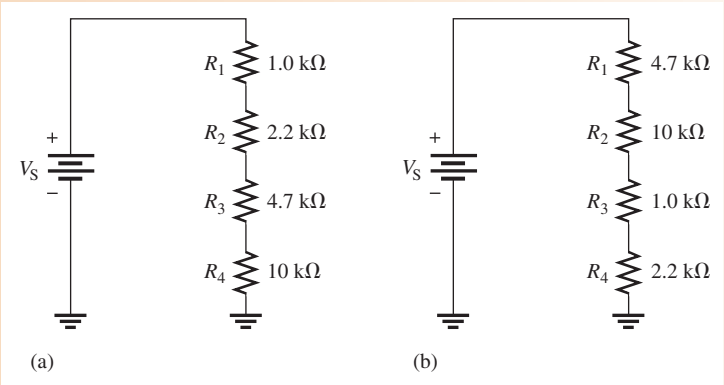

Solution For circuit (a),

$$R_T = 1.0\,\text{k}\Omega + 2.2\,\text{k}\Omega + 4.7\,\text{k}\Omega + 10\,\text{k}\Omega = \mathbf{17.9\,k\Omega}$$

www.EngineeringBooksPdf.com

For circuit (b),

$$R_T = 4.7\,k\Omega + 10\,k\Omega + 1.0\,k\Omega + 2.2\,k\Omega = \mathbf{17.9\,k\Omega}$$

Notice that the total resistance does not depend on the position of the resistors. Both circuits are identical in terms of total resistance.

Related Problem What is the total resistance for the following series resistors: 1.0 kΩ, 2.2 kΩ, 3.3 kΩ, and 5.6 kΩ?

EXAMPLE 5

Determine the value of R_4 in the circuit of Figure 12.

▶ FIGURE 12

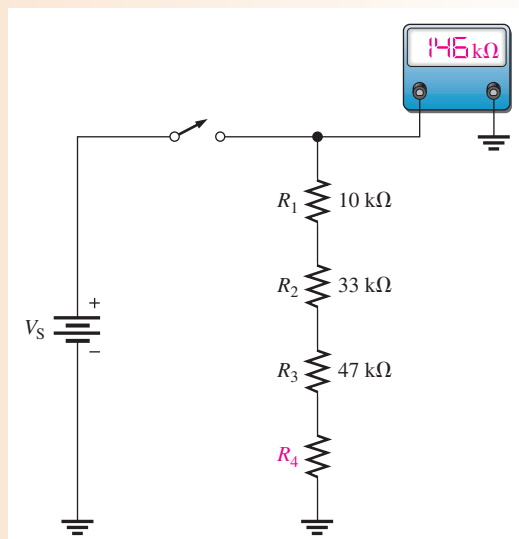

Solution From the ohmmeter reading, $R_T = 146\,k\Omega$.

$$R_T = R_1 + R_2 + R_3 + R_4$$

Solving for R_4 yields

$$R_4 = R_T - (R_1 + R_2 + R_3) = 146\,k\Omega - (10\,k\Omega + 33\,k\Omega + 47\,k\Omega) = \mathbf{56\,k\Omega}$$

Related Problem Determine the value of R_4 in Figure 12 if the ohmmeter reading is 112 kΩ.

Equal-Value Series Resistors

When a circuit has more than one resistor of the same value in series, there is a shortcut method to obtain the total resistance: Simply multiply the resistance value of the resistors having the same value by the number of equal-value resistors that are in series. This method is essentially the same as adding the values. For example, five 100 Ω resistors in series have an R_T of 5(100 Ω) = 500 Ω. In general, the formula is expressed as

$$\boldsymbol{R_T = nR} \qquad \text{Equation 2}$$

where n is the number of equal-value resistors and R is the resistance value.

www.EngineeringBooksPdf.com

EXAMPLE 6

Find the R_T of eight 22 Ω resistors in series.

Solution Find R_T by adding the values.

$$R_T = 22\,\Omega + 22\,\Omega + 22\,\Omega + 22\,\Omega + 22\,\Omega + 22\,\Omega + 22\,\Omega + 22\,\Omega = \mathbf{176\,\Omega}$$

However, it is much easier to multiply.

$$R_T = 8(22\,\Omega) = \mathbf{176\,\Omega}$$

Related Problem Find R_T for three 1.0 kΩ and two 680 Ω resistors in series.

SECTION 2 CHECKUP

1. Calculate R_T between points *A* and *B* for each circuit in Figure 13.
2. The following resistors are in series: one 100 Ω, two 47 Ω, four 12 Ω, and one 330 Ω. What is the total resistance?
3. Suppose that you have one resistor for each of the following values: 1.0 kΩ, 2.7 kΩ, 3.3 kΩ, and 1.8 kΩ. To get a total resistance of 10 kΩ, you need one more resistor. What should its value be?
4. What is the R_T for twelve 47 Ω resistors in series?

▶ FIGURE 13

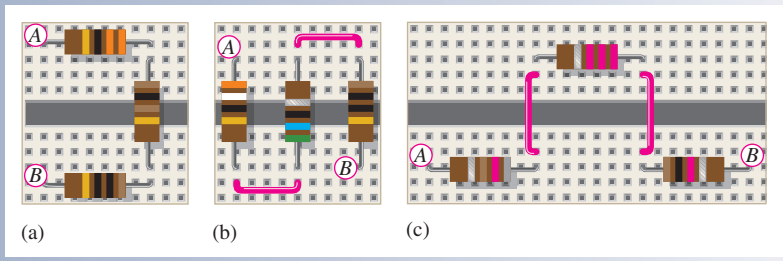

3 CURRENT IN A SERIES CIRCUIT

The current is the same through all points in a series circuit. The current through each resistor in a series circuit is the same as the current through all the other resistors that are in series with it.

After completing this section, you should be able to

- **Determine the current throughout a series circuit**
  - Show that the current is the same at all points in a series circuit

Figure 14 shows three resistors connected in series to a voltage source. *At any point in this circuit, the current into that point must equal the current out of that point,* as illustrated by the current directional arrows. Notice also that the current out of each of the resistors must equal the current in because there is no place where part of the current can branch off and go somewhere else. Therefore, the current in each section of the circuit is the same as the current in all other sections. It has only one path going from the negative (−) side of the source to the positive (+) side.

www.EngineeringBooksPdf.com

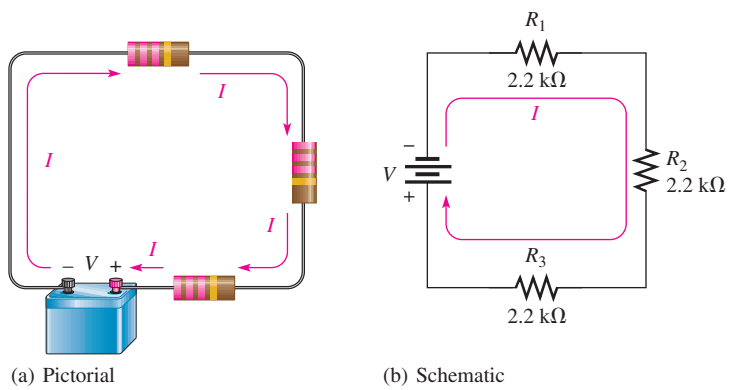

FIGURE 14

Current entering any point in a series circuit is the same as the current leaving that point.

In Figure 15, the battery supplies 1.82 mA of current to the series resistors. There are 1.82 mA from the battery's negative terminal. As shown, the same current is measured at several points in the series circuit.

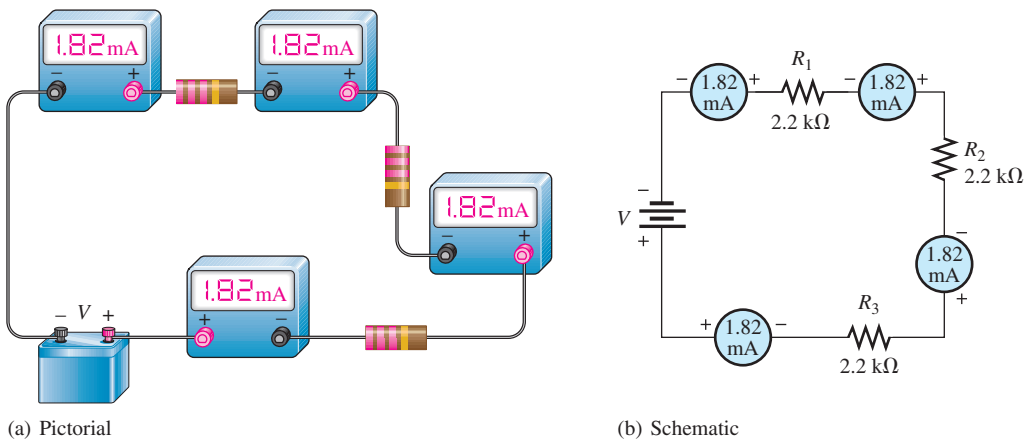

FIGURE 15

Current is the same at all points in a series circuit.

SECTION 3 CHECKUP

1. What statement can you make about the amount of current at any point in a series circuit?
2. In a series circuit with a 100 Ω and a 47 Ω resistor, there are 20 mA through the 100 Ω resistor. How much current is there through the 47 Ω resistor?
3. A milliammeter is connected between points *A* and *B* in Figure 16. It measures 50 mA. If you move the meter and connect it between points *C* and *D*, how much current will it indicate? Between *E* and *F*?
4. In Figure 17, how much current does ammeter 1 indicate? Ammeter 2?

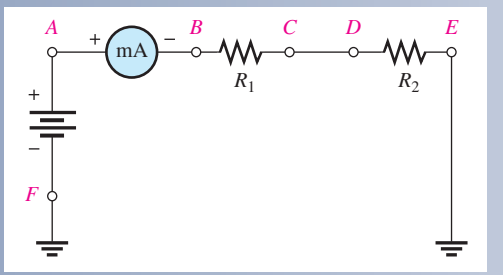

FIGURE 16

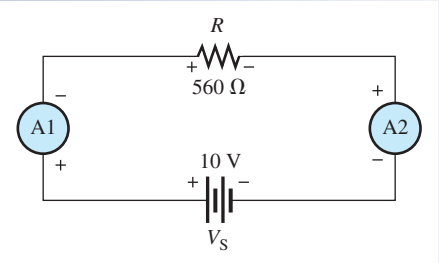

FIGURE 17

www.EngineeringBooksPdf.com

4 APPLICATION OF OHM'S LAW

The basic concepts of series circuits and Ohm's law can be applied to series circuit analysis.

After completing this section, you should be able to

- **Apply Ohm's law in series circuits**
  - Find the current in a series circuit
  - Find the voltage across each resistor in series

The following are key points to remember when you analyze series circuits:

1. Current through any of the series resistors is the same as the total current.
2. If you know the total applied voltage and the total resistance, you can determine the total current by Ohm's law.

$$I_T = \frac{V_T}{R_T}$$

3. If you know the voltage drop across one of the series resistors, R_x, you can determine the total current by Ohm's law.

$$I_T = \frac{V_x}{R_x}$$

4. If you know the total current, you can find the voltage drop across any of the series resistors by Ohm's law.

$$V_x = I_T R_x$$

5. The polarity of a voltage drop across a resistor is positive at the end of the resistor that is closest to the positive terminal of the voltage source.
6. The current through a resistor is defined to be in a direction from the negative end of the resistor to the positive end.
7. An open in a series circuit prevents current; and, therefore, there is zero voltage drop across each series resistor. The total voltage appears across the points between which there is an open.

Now let's look at several examples that use Ohm's law for series circuit analysis.

EXAMPLE 7

Find the current in the circuit of Figure 18.

▶ FIGURE 18

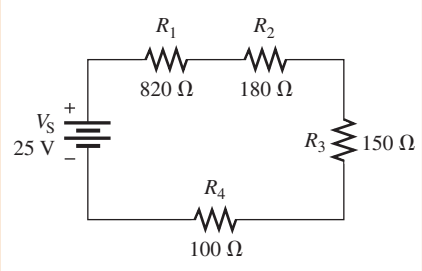

www.EngineeringBooksPdf.com

Solution The current is determined by the source voltage and the total resistance. First, calculate the total resistance.

$$R_T = R_1 + R_2 + R_3 + R_4 = 820\,\Omega + 180\,\Omega + 150\,\Omega + 100\,\Omega = 1.25\,\text{k}\Omega$$

Next, use Ohm's law to calculate the current.

$$I = \frac{V_S}{R_T} = \frac{25\text{ V}}{1.25\text{ k}\Omega} = \mathbf{20\text{ mA}}$$

Remember, the same current exists at all points in the circuit. Thus, each resistor has 20 mA through it.

Related Problem What is the current in the circuit of Figure 18 if R_4 is changed to 200 Ω?

Open Multisim file E04-07; files are found at www.pearsonhighered.com/floyd/. Connect the multimeter and verify the value of current calculated in this example. Change the value of R_4 to 200 Ω and verify the value of current calculated in the related problem.

EXAMPLE 8

The current in the circuit of Figure 19 is 1 mA. For this amount of current, what must the source voltage V_S be?

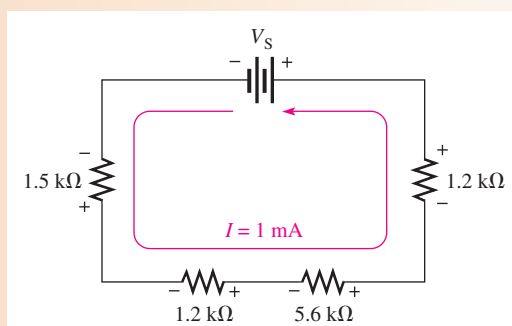

▲ FIGURE 19

Solution In order to calculate V_S, first determine R_T.

$$R_T = 1.2\,\text{k}\Omega + 5.6\,\text{k}\Omega + 1.2\,\text{k}\Omega + 1.5\,\text{k}\Omega = 9.5\,\text{k}\Omega$$

Now use Ohm's law to determine V_S.

$$V_S = IR_T = (1\text{ mA})(9.5\text{ k}\Omega) = \mathbf{9.5\text{ V}}$$

Related Problem If the 5.6 kΩ resistor is changed to 3.9 kΩ, what value of V_S is necessary to keep the current at 1 mA?

Open Multisim file E04-08. Verify that the calculated source voltage establishes the current in Figure 19. Verify the value of V_S determined in the related problem.

www.EngineeringBooksPdf.com

EXAMPLE 9

Calculate the voltage drop across each resistor in Figure 20, and find the value of V_S. To what value can V_S be raised if the current is to be limited to 5 mA?

▶ **FIGURE 20**

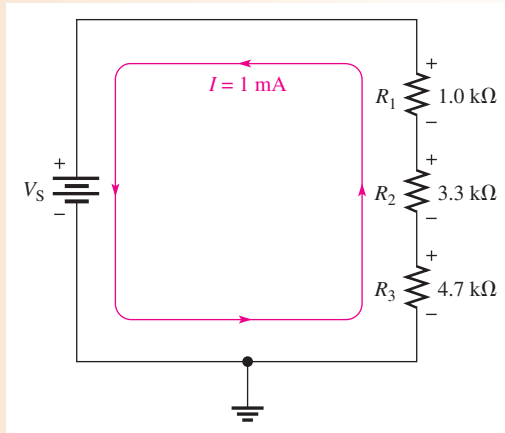

Solution By Ohm's law, the voltage drop across each resistor is equal to its resistance multiplied by the current through it. Use the Ohm's law formula $V = IR$ to determine the voltage drop across each of the resistors. Keep in mind that there is the same current through each series resistor. The voltage drop across R_1 (designated V_1) is

$$V_1 = IR_1 = (1\text{ mA})(1.0\text{ k}\Omega) = \mathbf{1\ V}$$

The voltage drop across R_2 is

$$V_2 = IR_2 = (1\text{ mA})(3.3\text{ k}\Omega) = \mathbf{3.3\ V}$$

The voltage drop across R_3 is

$$V_3 = IR_3 = (1\text{ mA})(4.7\text{ k}\Omega) = \mathbf{4.7\ V}$$

To calculate the value of V_S, first determine the total resistance.

$$R_T = 1.0\text{ k}\Omega + 3.3\text{ k}\Omega + 4.7\text{ k}\Omega = 9\text{ k}\Omega$$

The source voltage V_S is equal to the current times the total resistance.

$$V_S = IR_T = (1\text{ mA})(9\text{ k}\Omega) = \mathbf{9\ V}$$

Notice that if you add the voltage drops of the resistors, they total 9 V, which is the same as the source voltage.

V_S can be increased to a maximum value where $I = 5$ mA. Therefore the maximum value of V_S is

$$V_{S(max)} = IR_T = (5\text{ mA})(9\text{ k}\Omega) = \mathbf{45\ V}$$

Related Problem Repeat the calculations for V_1, V_2, V_3, V_S, and $V_{S(max)}$ if $R_3 = 2.2\text{ k}\Omega$ and I is maintained at 1 mA.

Open Multisim file E04-09. Using the multimeter, verify that the voltages across the resistors agree with the values calculated in this example.

EXAMPLE 10

Series connections often involve using resistance to limit current to some level. For example, it is necessary to limit current to a light-emitting diode (LED) to prevent the LED from burning out. The circuit in Figure 21 shows a basic application, where a red LED is used as an indicator as part of a more complicated circuit. The rheostat is

www.EngineeringBooksPdf.com

▶ FIGURE 21

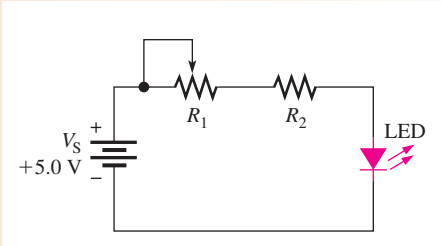

included to dim the LED, depending on ambient conditions. We will focus on just these two current-limiting resistors.

A red LED will always have a voltage across it of about +1.7 V when it is on and working within its normal operating range. The remaining voltage from the power supply will be across the two series resistors. Together, the rheostat and the fixed resistor will have a total of 3.3 V across them.

Assume you want current in the LED to range from a minimum of 2.5 mA (dim) to a maximum of 10 mA (bright). What values of R_1 and R_2 would you choose to accomplish this?

Solution Start with the brightest condition when the resistance of the rheostat is adjusted for 0 Ω. In this case, there will be no voltage across R_1 and 3.3 V will be across R_2. Because it is a series circuit, the same current is in R_2 as the LED. Therefore,

$$R_2 = \frac{V}{I} = \frac{3.3\text{ V}}{10\text{ mA}} = \mathbf{330\ \Omega}$$

Now determine the total resistance required to limit the current to 2.5 mA. The total resistance is $R_T = R_1 + R_2$, and the voltage drop across R_T is 3.3 V. From Ohm's law,

$$R_T = \frac{V}{I} = \frac{3.3\text{ V}}{2.5\text{ mA}} = 1.32\text{ k}\Omega$$

To find R_1, subtract the value of R_2 from the total resistance.

$$R_1 = R_T - R_2 = 1.32\text{ k}\Omega - 330\ \Omega = 990\ \Omega$$

Choose a **1.0 kΩ** rheostat as the nearest standard value.

Related Problem What is the value of R_2 if the highest current is 12 mA?

SECTION 4 CHECKUP

1. A 6 V battery is connected across three 100 Ω resistors in series. What is the current through each resistor?
2. How much voltage is required to produce 5 mA through the circuit of Figure 22?

▶ FIGURE 22

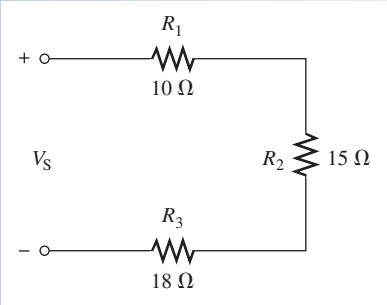

www.EngineeringBooksPdf.com

3. How much voltage is dropped across each resistor in Figure 22 when the current is 5 mA?
4. Four equal-value resistors are connected in series with a 5 V source. The measured current is 4.63 mA. What is the value of each resistor?
5. What size should a series current-limiting resistor be to limit the current to a red LED to 10 mA from a 3.0 V source? Assume the LED drops 1.7 V.

5 VOLTAGE SOURCES IN SERIES

Recall that a voltage source is an energy source that provides a constant voltage to a load. Batteries and power supplies are practical examples of dc voltage sources. When two or more voltage sources are in series, the total voltage is equal to the algebraic sum of the individual source voltages.

After completing this section, you should be able to

- **Determine the total effect of voltage sources connected in series**
  - Determine the total voltage of series sources with the same polarities
  - Determine the total voltage of series sources with opposite polarities

HANDS ON TIP

When you replace batteries in a flashlight or other device, it is best to use all of the same type of battery and not mix old batteries with new batteries. In particular, do not mix alkaline with nonalkaline batteries. Incorrect use of batteries can cause hydrogen gas to build inside the battery and cause the casing to rupture. Worse, the mixing of hydrogen gas with oxygen can be an explosion hazard. Cases are reported of flashlights that have exploded in hazardous situations.

When batteries are placed in a flashlight, they are connected in a **series-aiding** arrangement to produce a larger voltage, as illustrated in Figure 23. In this example, three 1.5 V batteries are placed in series to produce a total voltage ($V_{S(tot)}$).

$$V_{S(tot)} = V_{S1} + V_{S2} + V_{S3} = 1.5\text{ V} + 1.5\text{ V} + 1.5\text{ V} = 4.5\text{ V}$$

Series voltage sources (batteries in this case) are added when their polarities are in the same direction, or series-aiding, and are subtracted when their polarities are in opposite directions, or **series-opposing**. For example, if one of the batteries in the flashlight is turned around, as indicated in the schematic of Figure 24, its voltage subtracts because it has a negative value and reduces the total voltage.

$$V_{S(tot)} = V_{S1} - V_{S2} + V_{S3} = 1.5\text{ V} - 1.5\text{ V} + 1.5\text{ V} = 1.5\text{ V}$$

There is no valid reason for reversing a battery, and it can lead to high current and reduced life if it happens accidentally. However, an opposing source does occur naturally in the case of motors. An opposing voltage to the source voltage is generated within the motor, which reduces the current.

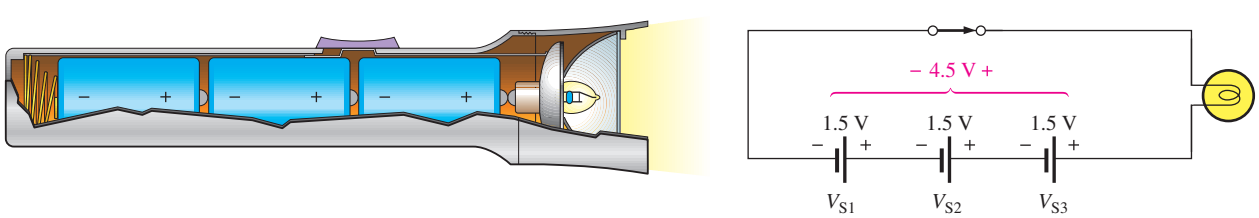

(a) Flashlight with series batteries

(b) Schematic of flashlight circuit

▲ FIGURE 23

Example of series-aiding voltage sources.

www.EngineeringBooksPdf.com

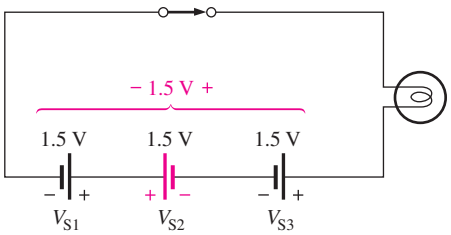

◀ FIGURE 24

When batteries are connected in opposite directions, the total voltage is the algebraic sum of the voltages. As noted, this is not a valid configuration for batteries.

EXAMPLE 11

What is the total source voltage ($V_{S(tot)}$) in Figure 25?

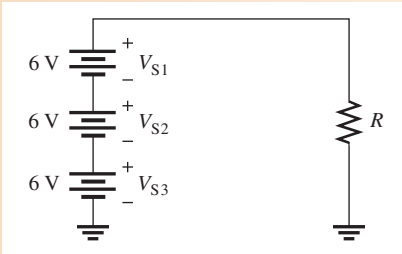

▲ FIGURE 25

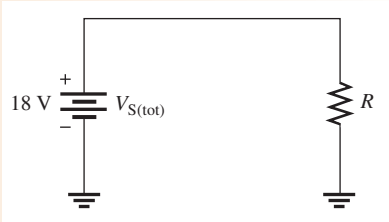

▲ FIGURE 26

Solution The polarity of each source is the same (the sources are connected in the same direction in the circuit). Therefore, add the three voltages to get the total.

$$V_{S(tot)} = V_{S1} + V_{S2} + V_{S3} = 6\,\text{V} + 6\,\text{V} + 6\,\text{V} = \mathbf{18\ V}$$

The three individual sources can be replaced by a single equivalent source of 18 V with its polarity as shown in Figure 26.

Related Problem If the battery V_{S3} in Figure 25 is accidentally installed backwards, what is the total voltage?

Open Multisim file E04-11. Verify the total source voltage. Repeat for the related problem.

EXAMPLE 12

Many circuits use positive and negative supply voltages. A dual-power supply will normally have two independent outputs, such as those shown in Figure 27. Show how to connect the two 12 V outputs from the power supply so that there is both a positive and a negative output and the two sources are series-aiding.

▶ FIGURE 27

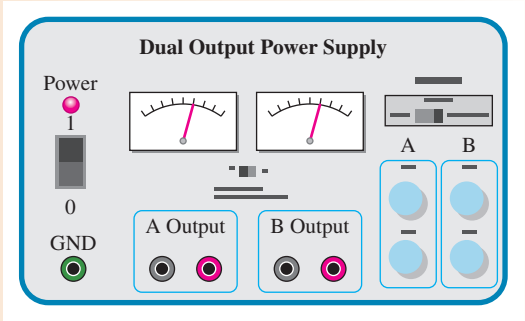

www.EngineeringBooksPdf.com

Solution See Figure 28. The positive output of one supply is connected to the negative output of the second supply. This makes the connection series-aiding. The ground terminal is connected to the common point between the supplies, forcing the *A* output to be below ground and the *B* output to be above ground.

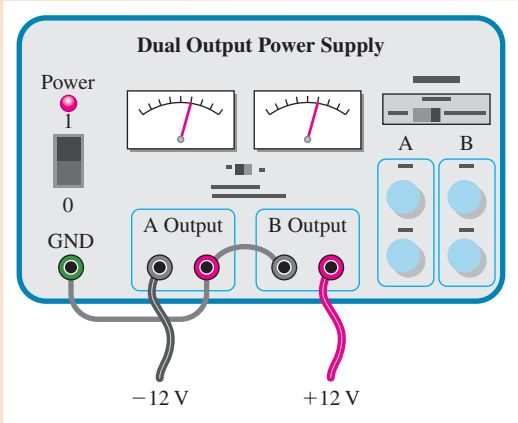

▲ FIGURE 28

Related Problem Draw the schematic of the setup in Figure 28.

SECTION 5 CHECKUP

1. How many 12 V batteries must be connected in series to produce 60 V? Draw a schematic that shows the battery connections.
2. Four 1.5 V flashlight batteries are connected in series-aiding. What is the total voltage across the bulb?
3. The resistive circuit in Figure 29 is used to bias a transistor amplifier. Show how to connect the resistors to two 15 V power supplies in order to get 30 V across the series resistors.
4. Determine the total source voltage for the circuit in Figure 30.
5. Assume that in a four-cell flashlight one of the four 1.5 V batteries was accidentally installed in the wrong direction. In this case, what voltage would be across the bulb when the light was turned on?

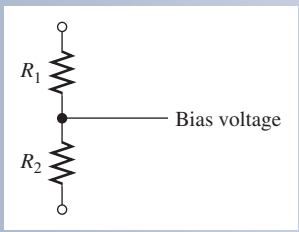

▲ FIGURE 29

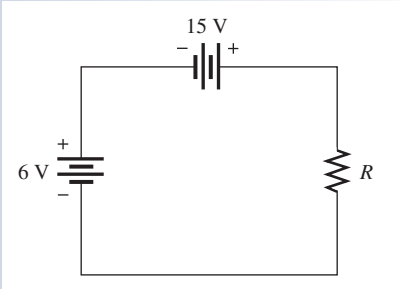

▲ FIGURE 30

www.EngineeringBooksPdf.com

6 KIRCHHOFF'S VOLTAGE LAW

Kirchhoff's voltage law is a fundamental circuit law that states that the algebraic sum of all the voltages around a single closed path is zero or, in other words, the sum of the voltage drops equals the total source voltage.

After completing this section, you should be able to

- **Apply Kirchhoff's voltage law**
  - State Kirchhoff's voltage law
  - Determine the source voltage by adding the voltage drops
  - Determine an unknown voltage drop

In an electric circuit, the voltages across the resistors (voltage drops) *always* have polarities opposite to the source voltage polarity. For example, in Figure 31, follow a counterclockwise loop around the circuit. Note that the source polarity is plus-to-minus and each voltage drop is minus-to-plus.

In Figure 31, the current is out of the negative side of the source and through the resistors as the arrows indicate. The current is into the negative side of each resistor and out the positive side. When electrons flow through a resistor, they lose energy and are therefore at a lower energy level when they emerge. The lower energy side is less negative (more positive) than the higher energy side. The drop in energy level across a resistor creates a potential difference, or voltage drop, with a minus-to-plus polarity in the direction of the current.

The voltage from point *A* to point *B* in the circuit of Figure 31 is the source voltage, V_S. Also, the voltage from *A* to *B* is the sum of the series resistor voltage drops. Therefore, the source voltage is equal to the sum of the three voltage drops, as stated by **Kirchhoff's voltage law**.

The sum of all the voltage drops around a single closed path in a circuit is equal to the total source voltage in that closed path.

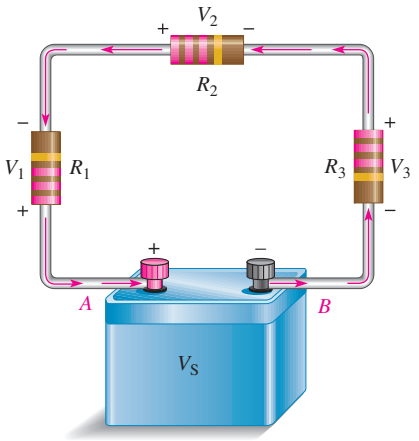

▲ FIGURE 31

Illustration of voltage polarities in a closed-loop circuit.

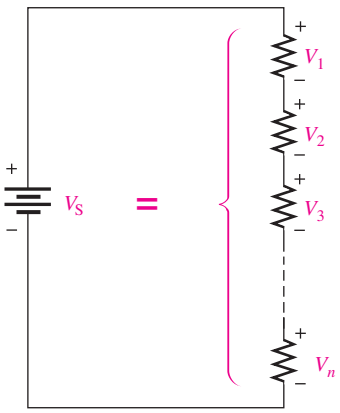

▲ FIGURE 32

Sum of *n* voltage drops equals the source voltage.

Kirchhoff's voltage law applied to a series circuit is illustrated in Figure 32. For this case, Kirchhoff's voltage law can be expressed by the equation

$$V_S = V_1 + V_2 + V_3 + \cdots + V_n \qquad \text{Equation 3}$$

where the subscript *n* represents the number of voltage drops.

www.EngineeringBooksPdf.com

HISTORY NOTE

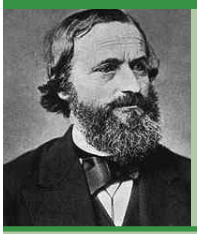

Gustav Robert Kirchhoff 1824–1887

Kirchhoff was a German physicist who contributed to the fundamental understanding of electrical circuits, spectroscopy, and the emission of black-body radiation by heated objects. Concepts in both circuit theory and thermal emission are named Kirchhoff's laws in his honor. Kirchhoff formulated his circuit laws, which are now commonly used in electrical engineering and technology. In 1845 while still a student. He completed this study as a seminar exercise; it later became his doctoral dissertation. (Photo credit: Library of Congress, LC-USZ62-133715.)

If all the voltage drops around a closed path are added and then this total is subtracted from the source voltage, the result is zero. This result occurs because the sum of the voltage drops in a series circuit always equals the source voltage.

Equation 3 can be applied to any circuit that has a voltage source and resistors or other loads. The key idea is that a single closed path is followed from an arbitrary starting point and back to this point. In a series circuit, the closed path will always include a voltage source and one or more resistors or other loads. In this case, the source represents a voltage *rise,* and each load represents a voltage *drop.* Another way of stating Kirchhoff's voltage law for a series circuit is that the sum of all voltage rises is equal to the sum of all voltage drops.

You can verify Kirchhoff's voltage law in a series circuit by connecting the circuit and measuring each resistor voltage and the source voltage, as illustrated in Figure 33. When the resistor voltages are added together, their sum will equal the source voltage. Any number of resistors can be used.

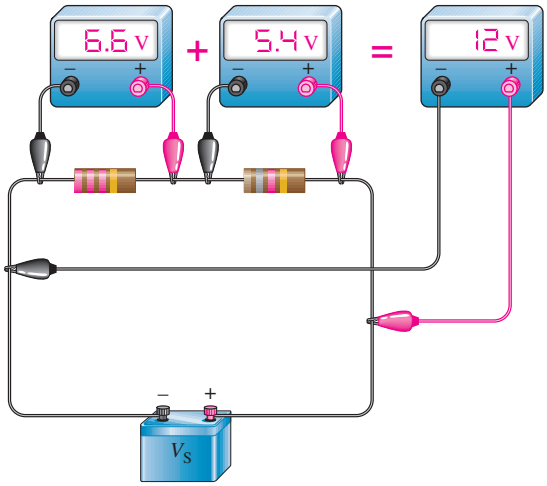

▶ **FIGURE 33**

Illustration of a verification of Kirchhoff's voltage law.

Kirchhoff's voltage law was developed here for a series circuit, but the concept can be applied to any circuit. In complex circuits, you can still write Kirchhoff's voltage law, but there are cases where there is no source voltage in a given closed loop. Even so, Kirchhoff's voltage law still applies. This leads to a more general statement of Kirchhoff's voltage law:

The algebraic sum of the voltages around any closed path in a circuit is equal to zero.

If a voltage source is present, it is just treated as one of the terms in the summation. It is important to assign the correct algebraic sign to the terms, noting if the voltage is rising or dropping as one traverses the loop. In equation form,

Equation 4

$$V_1 + V_2 + V_3 + \cdots + V_n = 0$$

Any of the variables in Equation 4 can represent a voltage rise or a voltage drop. This more-general form of Kirchhoff's voltage law can be expressed more concisely as

$$\sum_{i=1}^{n} V_i = 0$$

This equation is a shorthand way of writing Equation 4. The capital sigma (Σ) means to add the voltages from the first ($i = 1$) to the last ($i = n$).

This form of Kirchhoff's voltage law can be applied to circuits other than the series circuits, provided you follow a single closed path. In applying Equation 4, you need to assign an algebraic sign to each voltage in the path. In circuits other than series circuits, a voltage across a resistor can appear as either a rise or a drop, depending on the path chosen. As you

www.EngineeringBooksPdf.com

traverse the path, you will need to write voltage rises and voltage drops in a consistent manner. For series circuits such as given in Figure 32, the main idea is that the source voltage (rise) is equal to the sum of the voltages (drops) across the loads (resistors).

EXAMPLE 13

Determine the source voltage, V_S, in Figure 34 where the two voltage drops are given.

▶ **FIGURE 34**

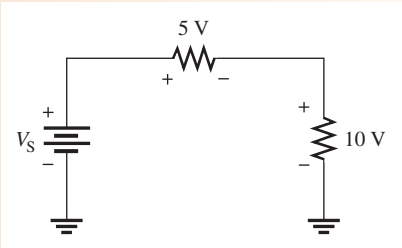

Solution By Kirchhoff's voltage law (Eq. 3), the source voltage (applied voltage) must equal the sum of the voltage drops. Adding the voltage drops gives the value of the source voltage.

$$V_S = 5\text{ V} + 10\text{ V} = \mathbf{15\ V}$$

Related Problem If V_S is increased to 30 V in Figure 35, what are the two voltage drops?

Open Multisim file E04-13. Verify that the voltage drops equal to V_S. Repeat for the related problem.

EXAMPLE 14

Determine the unknown voltage drop, V_3, in Figure 35.

▶ **FIGURE 35**

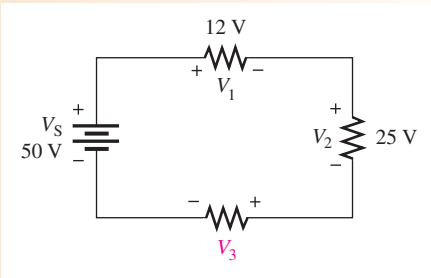

Solution By Kirchhoff's voltage law (Equation 4), the algebraic sum of the voltages around the circuit is zero.

$$V_1 + V_2 + V_3 + V_4 = 0$$

Substitute $-V_S$ for V_4. Then,

$$V_1 + V_2 + V_3 - V_S = 0$$

www.EngineeringBooksPdf.com

Solve for V_3.

$$V_3 = V_S - V_1 - V_2 = 50\text{ V} - 12\text{ V} - 25\text{ V} = \mathbf{13\ V}$$

The voltage drop, V_3, across R_3 is 13 V, and its polarity is as shown in Figure 35.

Related Problem Determine V_3 in Figure 35 if the source is changed to 25 V.

Open Multisim file E04-14. Verify that V_3 agrees with the calculated value. Repeat for the related problem.

EXAMPLE 15

Find the value of R_4 in Figure 36.

▶ **FIGURE 36**

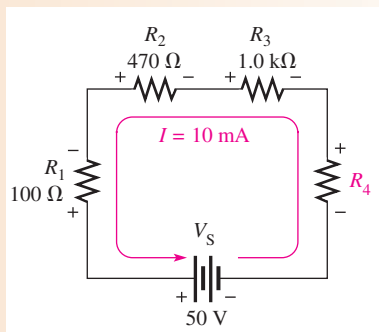

Solution In this problem you will use both Ohm's law and Kirchhoff's voltage law. First, use Ohm's law to find the voltage drop across each of the known resistors.

$$V_1 = IR_1 = (10\text{ mA})(100\ \Omega) = 1.0\text{ V}$$
$$V_2 = IR_2 = (10\text{ mA})(470\ \Omega) = 4.7\text{ V}$$
$$V_3 = IR_3 = (10\text{ mA})(1.0\text{ k}\Omega) = 10\text{ V}$$

Next, use Kirchhoff's voltage law to find V_4, the voltage drop across the unknown resistor.

$$V_S - V_1 - V_2 - V_3 - V_4 = 0\text{ V}$$
$$50\text{ V} - 1.0\text{ V} - 4.7\text{ V} - 10\text{ V} - V_4 = 0\text{ V}$$
$$34.3\text{ V} - V_4 = 0\text{ V}$$
$$V_4 = 34.3\text{ V}$$

Now that you know V_4, you can use Ohm's law to calculate R_4.

$$R_4 = \frac{V_4}{I} = \frac{34.3\text{ V}}{10\text{ mA}} = \mathbf{3.43\ k\Omega}$$

R_4 is most likely a 3.3 kΩ standard-value resistor because 3.43 kΩ is within a standard tolerance range (±5%) of 3.3 kΩ.

Related Problem Determine the value of R_4 in Figure 36 if $V_S = 20$ V and $I = 10$ mA.

Open Multisim file E04-15. Verify that the calculated value of R_4 produces the current in Figure 36. Repeat for the related problem.

www.EngineeringBooksPdf.com

SECTION 6 CHECKUP

1. State Kirchhoff's voltage law in two ways.
2. A 50 V source is connected to a series resistive circuit. What is the sum of the voltage drops in this circuit?
3. Two equal-value resistors are connected in series across a 10 V battery. What is the voltage drop across each resistor?
4. In a series circuit with a 25 V source, there are three resistors. One voltage drop is 5 V, and the other is 10 V. What is the value of the third voltage drop?
5. The individual voltage drops in a series circuit are 1 V, 3 V, 5 V, 7 V, and 8 V. What is the total voltage applied across the series circuit?

7 VOLTAGE DIVIDERS

A series circuit acts as a voltage divider. The voltage divider is an important application of series circuits.

After completing this section, you should be able to

- **Use a series circuit as a voltage divider**
  - Apply the voltage-divider formula
  - Use the potentiometer as an adjustable voltage divider
  - Describe some voltage-divider applications

A circuit consisting of a series string of resistors connected to a voltage source acts as a **voltage divider**. Figure 37(a) shows a circuit with two resistors in series, although there can be any number. As you already know, there are two voltage drops: one across R_1 and one across R_2. These voltage drops are labeled V_1 and V_2, respectively, as indicated in the schematic. Since each resistor has the same current through it, the voltage drops are proportional to the resistance values. For example, if the value of R_2 is twice that of R_1, then the value of V_2 is twice that of V_1.

The total voltage drop around a single closed path divides among the series resistors in amounts directly proportional to the resistance values. The smallest resistance has the least voltage, and the largest resistance has the most voltage ($V = IR$). For example, in Figure 37(b), if V_S is 10 V, R_1 is 100 Ω, and R_2 is 200 Ω, then V_1 is one-third the total voltage, or 3.33 V, because R_1 is one-third the total resistance. Likewise, V_2 is two-thirds V_S, or 6.67 V, because R_2 is two-thirds the total resistance.

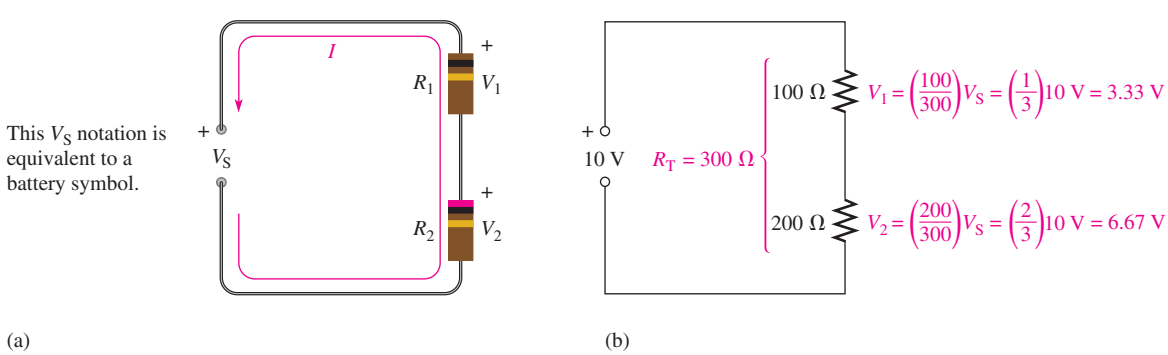

▲ **FIGURE 37**

Example of a two-resistor voltage divider.

www.EngineeringBooksPdf.com

Voltage-Divider Formula

With a few calculations, you can develop a formula for determining how the voltages divide among series resistors. Assume a circuit with n resistors in series as shown in Figure 38, where n can be any number.

▶ FIGURE 38

Generalized voltage divider with n resistors.

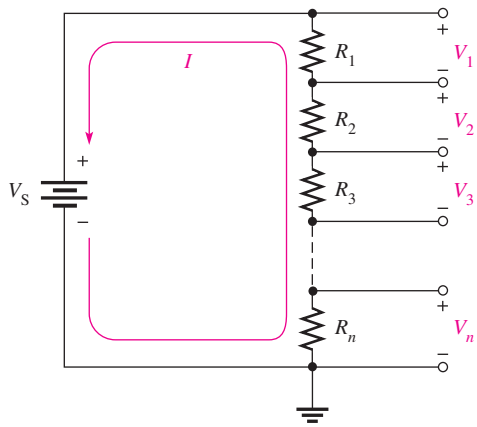

Let V_x represent the voltage drop across any one of the resistors and R_x represent the number of a particular resistor or combination of resistors. By Ohm's law, you can express the voltage drop across R_x as follows:

$$V_x = IR_x$$

The current through the circuit is equal to the source voltage divided by the total resistance ($I = V_S/R_T$). In the circuit of Figure 38, the total resistance is

$$R_T = R_1 + R_2 + R_3 + \cdots + R_n$$

By substitution of V_S/R_T for I in the expression for V_x,

$$V_x = \left(\frac{V_S}{R_T}\right)R_x$$

Rearranging the terms you get

Equation 5

$$\boldsymbol{V_x = \left(\frac{R_x}{R_T}\right)V_S}$$

Equation 5 is the general voltage-divider formula, which can be stated as follows:

The voltage drop across any resistor or combination of resistors in a series circuit is equal to the ratio of that resistance value to the total resistance, multiplied by the source voltage.

EXAMPLE 16

Determine V_1 (the voltage across R_1) and V_2 (the voltage across R_2) in the circuit in Figure 39.

▶ FIGURE 39

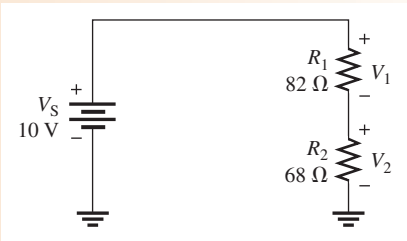

www.EngineeringBooksPdf.com

Solution To determine V_1, use the voltage-divider formula, $V_x = (R_x/R_T)V_S$, where $x = 1$. The total resistance is

$$R_T = R_1 + R_2 = 82\,\Omega + 68\,\Omega = 150\,\Omega$$

R_1 is 82 Ω and V_S is 10 V. Substitute these values into the voltage-divider formula.

$$V_1 = \left(\frac{R_1}{R_T}\right)V_S = \left(\frac{82\,\Omega}{150\,\Omega}\right)10\text{ V} = \mathbf{5.47\ V}$$

There are two ways to find the value of V_2: Kirchhoff's voltage law or the voltage-divider formula. If you use Kirchhoff's voltage law ($V_S = V_1 + V_2$), substitute the values for V_S and V_1 and solve for V_2.

$$V_2 = V_S - V_1 = 10\text{ V} - 5.47\text{ V} = \mathbf{4.53\ V}$$

To determine V_2, use the voltage-divider formula where $x = 2$.

$$V_2 = \left(\frac{R_2}{R_T}\right)V_S = \left(\frac{68\,\Omega}{150\,\Omega}\right)10\text{ V} = \mathbf{4.53\ V}$$

Related Problem Find the voltage drops across R_1 and R_2 if R_2 is changed to 180 Ω in Figure 39.

Open Multisim file E04-16. Use the multimeter to verify the calculated values of V_1 and V_2. Repeat for the related problem.

EXAMPLE 17

Calculate the voltage drop across each resistor in the circuit of Figure 40.

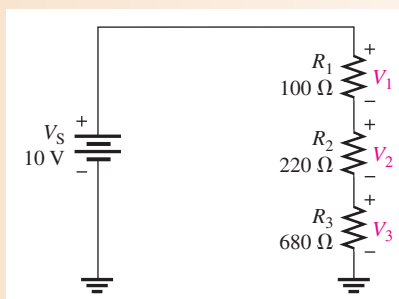

▲ FIGURE 40

Solution Look at the circuit for a moment and consider the following: The total resistance is 1000 Ω. Ten percent of the total voltage is across R_1 because it is 10% of the total resistance (100 Ω is 10% of 1000 Ω). Likewise, 22% of the total voltage is dropped across R_2 because it is 22% of the total resistance (220 Ω is 22% of 1000 Ω). Finally, R_3 drops 68% of the total voltage (680 Ω is 68% of 1000 Ω).

Because of the convenient values in this problem, it is easy to mentally calculate the voltage drops ($V_1 = 0.10 \times 10\text{ V} = 1\text{ V}$, $V_2 = 0.22 \times 10\text{ V} = 2.2\text{ V}$, and $V_3 = 0.68 \times 10\text{ V} = 6.8\text{ V}$). Such is usually not the case, but sometimes a little thinking will produce a result more efficiently.

www.EngineeringBooksPdf.com

Although you have already reasoned through this problem, the calculations are

$$V_1 = \left(\frac{R_1}{R_T}\right)V_S = \left(\frac{100\ \Omega}{1000\ \Omega}\right)10\ \text{V} = \mathbf{1\ V}$$

$$V_2 = \left(\frac{R_2}{R_T}\right)V_S = \left(\frac{220\ \Omega}{1000\ \Omega}\right)10\ \text{V} = \mathbf{2.2\ V}$$

$$V_3 = \left(\frac{R_3}{R_T}\right)V_S = \left(\frac{680\ \Omega}{1000\ \Omega}\right)10\ \text{V} = \mathbf{6.8\ V}$$

Notice that the sum of the voltage drops is equal to the source voltage, in accordance with Kirchhoff's voltage law. This check is a good way to verify your results.

Related Problem If R_1 and R_2 are both changed to 680 Ω in Figure 40, what are all the voltage drops?

Open Multisim file E04-17. Verify the values of V_1, V_2, and V_3. Repeat for the related problem.

EXAMPLE 18

Determine the voltages between the following points in the circuit of Figure 41:

(a) *A* to *B* **(b)** *A* to *C* **(c)** *B* to *C* **(d)** *B* to *D* **(e)** *C* to *D*

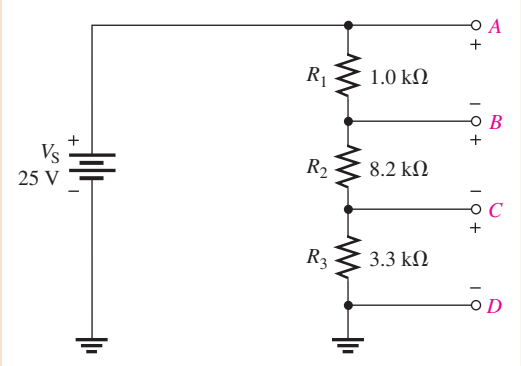

▲ FIGURE 41

Solution First determine R_T.

$$R_T = 1.0\ \text{k}\Omega + 8.2\ \text{k}\Omega + 3.3\ \text{k}\Omega = 12.5\ \text{k}\Omega$$

Then apply the voltage-divider formula to obtain each required voltage.

(a) The voltage *A* to *B* is also the voltage drop across R_1.

$$V_{AB} = \left(\frac{R_1}{R_T}\right)V_S = \left(\frac{1.0\ \text{k}\Omega}{12.5\ \text{k}\Omega}\right)25\ \text{V} = \mathbf{2\ V}$$

(b) The voltage from *A* to *C* is the combined voltage drop across both R_1 and R_2. In this case, R_x in the general formula given in Equation 5 is $R_1 + R_2$.

$$V_{AC} = \left(\frac{R_1 + R_2}{R_T}\right)V_S = \left(\frac{9.2\ \text{k}\Omega}{12.5\ \text{k}\Omega}\right)25\ \text{V} = \mathbf{18.4\ V}$$

www.EngineeringBooksPdf.com

(c) The voltage from B to C is the voltage drop across R_2.

$$V_{BC} = \left(\frac{R_2}{R_T}\right)V_S = \left(\frac{8.2\text{ k}\Omega}{12.5\text{ k}\Omega}\right)25\text{ V} = \mathbf{16.4\ V}$$

(d) The voltage from B to D is the combined voltage drop across both R_2 and R_3. In this case, R_x in the general formula is $R_2 + R_3$.

$$V_{BD} = \left(\frac{R_2 + R_3}{R_T}\right)V_S = \left(\frac{11.5\text{ k}\Omega}{12.5\text{ k}\Omega}\right)25\text{ V} = \mathbf{23\ V}$$

(e) Finally, the voltage from C to D is the voltage drop across R_3.

$$V_{CD} = \left(\frac{R_3}{R_T}\right)V_S = \left(\frac{3.3\text{ k}\Omega}{12.5\text{ k}\Omega}\right)25\text{ V} = \mathbf{6.6\ V}$$

If you connect this voltage divider, you can verify each of the calculated voltages by connecting a voltmeter between the appropriate points in each case.

Related Problem Determine each of the previously calculated voltages if V_S is doubled.

Open Multisim file E04-18. Verify the values of V_{AB}, V_{AC}, V_{BC}, V_{BD}, and V_{CD}. Repeat for the related problem.

The Potentiometer as an Adjustable Voltage Divider

A potentiometer is a variable resistor with three terminals. A linear potentiometer connected to a voltage source is shown in Figure 42. Notice that the two end terminals are labeled 1 and 2. The adjustable terminal or wiper is labeled 3. The potentiometer acts as a voltage divider, which can be illustrated by separating the total resistance into two parts as shown in Figure 42(c). The resistance between terminal 1 and terminal 3 (R_{13}) is one part, and the resistance between terminal 3 and terminal 2 (R_{32}) is the other part. The potentiometer acts like a two-resistor voltage divider that can be manually adjusted.

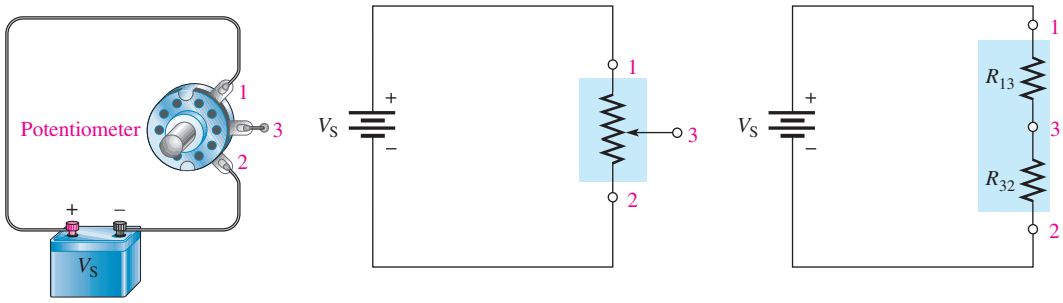

(a) Pictorial (b) Schematic (c) Equivalent schematic

▲ **FIGURE 42**

The potentiometer used as a voltage divider.

Figure 43 shows what happens when the wiper contact (3) is moved. In part (a), the wiper is exactly centered, making the two resistances equal. If you measure the voltage across terminals 3 to 2 as indicated, you have one-half of the total source voltage. When the wiper is moved up from the center position, as in part (b), the resistance between terminals 3 and 2 increases, and the voltage across it increases proportionally. When the wiper is moved down from the center position, as in part (c), the resistance between terminals 3 and 2 decreases, and the voltage decreases proportionally.

www.EngineeringBooksPdf.com

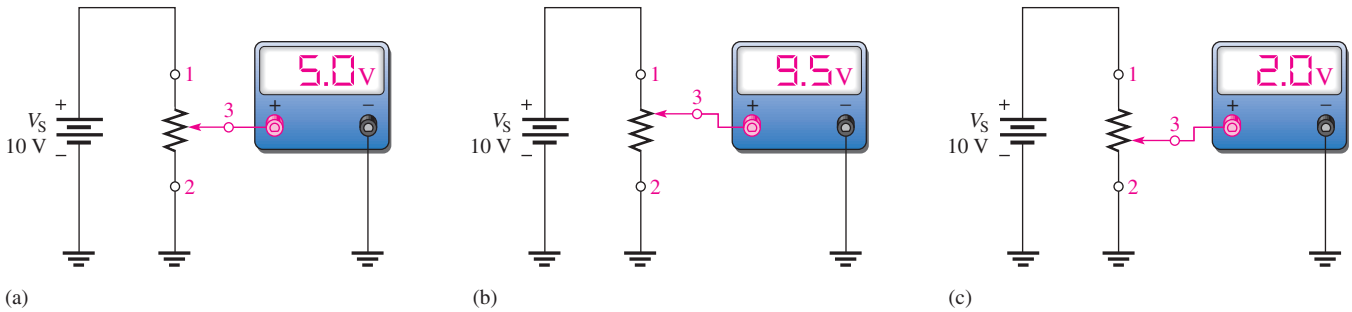

▲ FIGURE 43

Adjusting the voltage divider.

Applications

The volume control of a radio receiver is a common application of a potentiometer used as a voltage divider. Since the loudness of the sound is dependent on the amount of voltage associated with the audio signal, you can increase or decrease the volume by adjusting the potentiometer, that is, by turning the knob of the volume control on the set. The block diagram in Figure 44 shows how a potentiometer can be used for volume control in a typical receiver.

▶ FIGURE 44

A variable voltage divider used for volume control in a radio receiver.

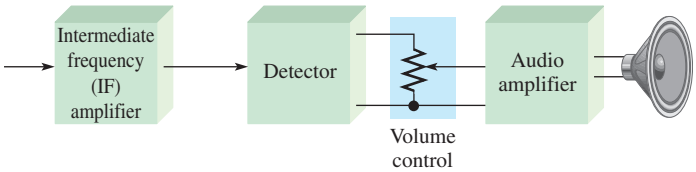

Figure 45 illustrates how a potentiometer voltage divider can be used as a level sensor in a storage tank. As shown in part (a), the float moves up as the tank is filled and moves down as the tank empties. The float is mechanically linked to the wiper arm of a potentiometer, as shown in part (b). The output voltage varies proportionally with the position of the wiper

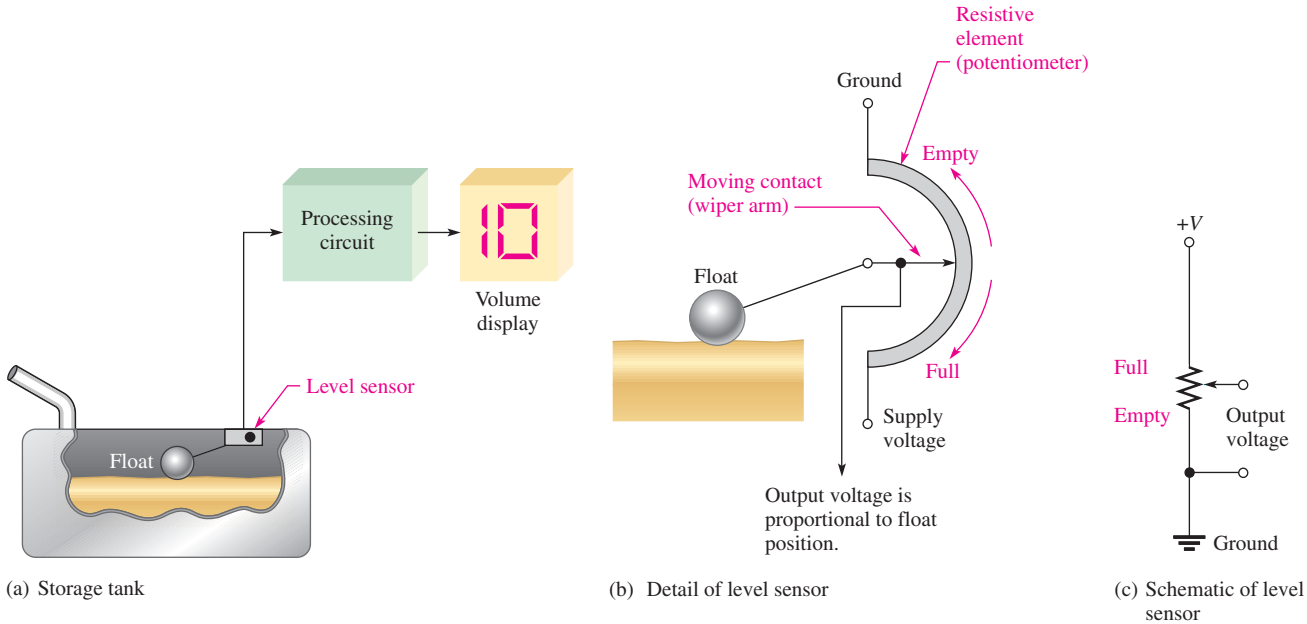

▲ FIGURE 45

A potentiometer voltage divider used as a level sensor.

www.EngineeringBooksPdf.com

arm. As the liquid in the tank decreases, the sensor output voltage also decreases. The output voltage goes to the indicator circuitry, which controls a digital readout to show the amount of liquid in the tank. The schematic of this system is shown in part (c).

Another application for voltage dividers is in setting the gain of operational amplifiers and setting up reference voltages in power supplies. In certain precision applications, voltage dividers are available in IC form. In addition, voltage dividers are used for setting the dc operating voltage (bias) in transistor amplifiers. Figure 46 shows a voltage divider used for this purpose.

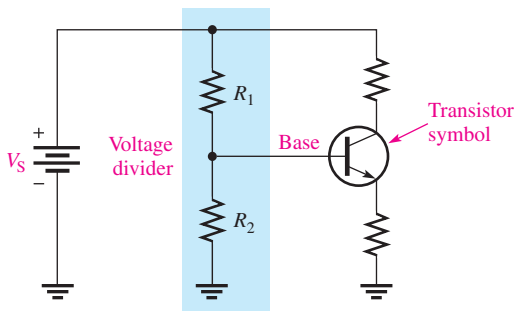

◀ **FIGURE 46**

The voltage divider used as a bias circuit for a transistor amplifier.

A voltage divider is useful for converting a resistance sensor output to a voltage. Resistance sensors include thermistors, CdS cells, and strain gauges. To convert a change in resistance to an output voltage, the resistance sensor can be used in place of one of the resistors of a voltage divider.

EXAMPLE 19

Assume you have a CdS cell configured as shown in Figure 47 that uses three AA batteries for a voltage source (4.5 V). At dusk, the resistance of the cell rises from a low resistance to above 90 kΩ. The cell is used to trigger a logic circuit that will turn on lights if V_{OUT} is greater than approximately 1.5 V. What value of R will produce an output voltage of 1.5 V when the cell resistance is 90 kΩ?

▶ **FIGURE 47**

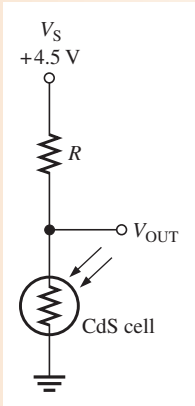

Solution Notice that the threshold voltage (1.5 V) is one-third of the supply voltage. You know that 90 kΩ represents one-third of the total resistance at this point. Therefore, the total resistance is

$$R_T = 3(90\text{ k}\Omega) = 270\text{ k}\Omega$$

The resistance needed to produce an output voltage of 1.5 V is

$$R = R_T - 90\text{ k}\Omega = 270\text{ k}\Omega - 90\text{ k}\Omega = \mathbf{180\text{ k}\Omega}$$

Related Problem Starting with Equation 5, prove that the required resistance is 180 kΩ to produce an output of 1.5 V when the cell resistance is 90 kΩ.

www.EngineeringBooksPdf.com

SECTION 7 CHECKUP

1. What is a voltage divider?
2. How many resistors can there be in a series voltage-divider circuit?
3. Write the general voltage-divider formula.
4. If two series resistors of equal value are connected across a 20 V source, how much voltage is there across each resistor?
5. A 56 kΩ resistor and an 82 kΩ resistor are connected as a voltage divider. The source voltage is 10 V. Draw the circuit, and determine the voltage across each of the resistors.
6. The circuit of Figure 48 is an adjustable voltage divider. If the potentiometer is linear, where would you set the wiper in order to get 5 V from *B* to *A* and 5 V from *C* to *B*?

▶ **FIGURE 48**

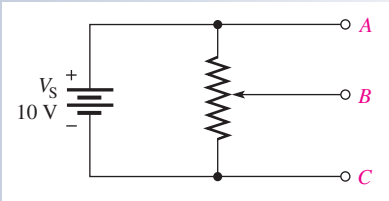

8 POWER IN SERIES CIRCUITS

The power dissipated by each individual resistor in a series circuit contributes to the total power in the circuit. The individual powers are additive.

After completing this section, you should be able to

- **Determine power in a series circuit**
  - Apply any of the power formulas

The total amount of power in a series resistive circuit is equal to the sum of the powers in each resistor in series.

Equation 6

$$P_T = P_1 + P_2 + P_3 + \cdots + P_n$$

where P_T is the total power and P_n is the power in the last resistor in series (n can be any positive integer equal to the number of resistors in series).

Power formulas are applicable to series circuits. Since each resistor in series has the same current through it, the following formulas are used to calculate the total power:

$$P_T = V_S I$$
$$P_T = I^2 R_T$$
$$P_T = \frac{V_S^2}{R_T}$$

where I is the current through the circuit, V_S is the source voltage across the series circuit, and R_T is the total resistance.

www.EngineeringBooksPdf.com

EXAMPLE 20

Determine the total amount of power in the series circuit in Figure 49.

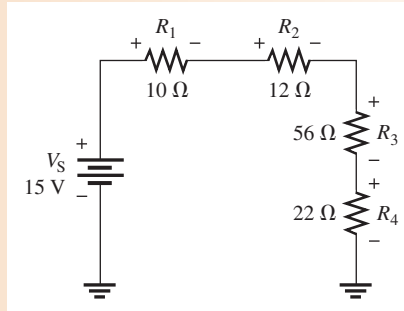

▲ FIGURE 49

Solution The source voltage is 15 V. The total resistance is

$$R_T = 10\,\Omega + 12\,\Omega + 56\,\Omega + 22\,\Omega = 100\,\Omega$$

The easiest formula to use is $P_T = V_S^2/R_T$ since you know both V_S and R_T.

$$P_T = \frac{V_S^2}{R_T} = \frac{(15\text{ V})^2}{100\,\Omega} = \frac{225\text{ V}^2}{100\,\Omega} = 2.25\text{ W}$$

If you determine the power of each resistor separately and add all these powers, you obtain the same result. Another calculation will illustrate. First, find the current.

$$I = \frac{V_S}{R_T} = \frac{15\text{ V}}{100\,\Omega} = 150\text{ mA}$$

Next, calculate the power for each resistor using $P = I^2R$.

$$P_1 = (150\text{ mA})^2(10\,\Omega) = 225\text{ mW}$$
$$P_2 = (150\text{ mA})^2(12\,\Omega) = 270\text{ mW}$$
$$P_3 = (150\text{ mA})^2(56\,\Omega) = 1.26\text{ W}$$
$$P_4 = (150\text{ mA})^2(22\,\Omega) = 495\text{ mW}$$

Now, add these powers to get the total power.

$$P_T = 225\text{ mW} + 270\text{ mW} + 1.260\text{ W} + 495\text{ mW} = \mathbf{2.25\text{ W}}$$

This result shows that the sum of the individual powers is equal to the total power as determined by the formula $P_T = V_S^2/R_T$.

Related Problem What is the total power in the circuit of Figure 49 if V_S is increased to 30 V?

SECTION 8 CHECKUP

1. If you know the power in each resistor in a series circuit, how can you find the total power?
2. The resistors in a series circuit have the following powers: 1 W, 2 W, 5 W, and 8 W. What is the total power in the circuit?
3. A circuit has a 100 Ω, a 330 Ω, and a 680 Ω resistor in series. There is a current of 1 mA through the circuit. What is the total power?

www.EngineeringBooksPdf.com

9 VOLTAGE MEASUREMENTS

Designate *reference ground* as the 0 V reference point for a circuit. Voltage is always measured with respect to another point in the circuit. *Ground* is discussed in more detail in this section.

After completing this section, you should be able to

- **State how to measure voltage with respect to ground**
  - Define the term *reference ground*
  - Explain the use of single and double subscripts for indicating voltages

The term *ground* has its origin in telephone systems in which one of the conductors was the earth itself. The term was also used in early radio receiving antennas (called *aerials*) where one part of the system was connected to a metal pipe driven into the earth. Today, *ground* can mean different things and is not necessarily at the same potential as the earth. In electronic systems, **reference ground** (or **common**) refers to a conductor that is the comparison point for voltage measurements in a circuit. Frequently, it is the conductor that carries the power supply return current. Most electronic circuit boards have a larger conducting surface area for ground. For many multilayer boards the surface area is a separate internal layer, which is referred to as a **ground plane**.

In electrical wiring, the reference ground is usually the same as the earth potential because neutral and earth ground are connected at the entrance point to a building. In this case, reference ground and earth ground are at the same potential. (Section 517 of the National Electric Code (NEC) specifies certain exceptions to this grounding method for hospital operating rooms and health care facilities.)

The concept of *reference ground* is also used in automotive electrical systems. In most automotive systems, the chassis of the automobile is the ground reference (even though the tires insulate it from the earth, which can be a different potential). In nearly all modern automobiles, the negative post of the battery is connected to the chassis with a solid low-resistance connection. This makes the chassis of the vehicle serve as the return path for all of the electrical circuits in the vehicle, as illustrated in the simplified drawing in Figure 50. In some vintage cars, the positive terminal was connected to the chassis in an arrangement called *positive ground.* In both cases, the chassis represents the reference ground point.

SAFETY NOTE

When removing a battery from an automobile, remove the ground wire first. If a tool should then accidentally come in contact with the chassis and the positive terminal, a spark will be avoided; there is no current because there is no return path. When installing a battery, always install the ground connection last to avoid a spark if a tool accidentally touches the chassis.

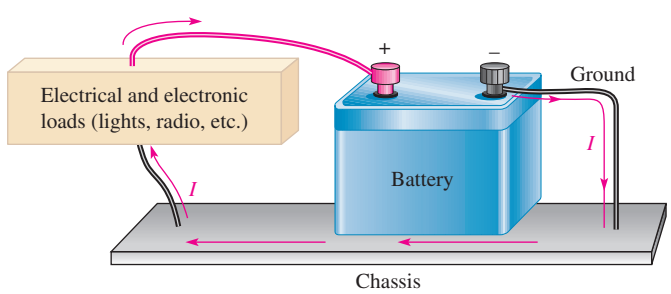

▲ FIGURE 50

The chassis serves as a return path for the electrical circuits in a vehicle.

Measuring Voltages with Respect to Ground

When voltages are measured with respect to ground, they are indicated with a single-letter subscript. For example, V_A is voltage at point A with respect to ground. Each circuit

www.EngineeringBooksPdf.com

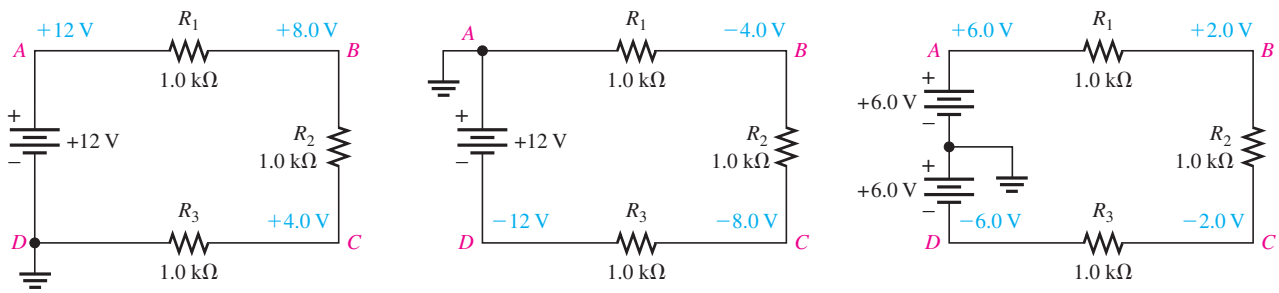

(a) Positive voltages with respect to ground

(b) Negative voltages with respect to ground

(c) Positive and negative voltages with respect to ground

▲ **FIGURE 51**

The ground point does not affect the current in the circuit or the voltage drops across the resistors.

in Figure 51 consists of three 1.0 kΩ series resistors and four lettered reference points. Reference ground represents a potential of 0 V with respect to all other points in each circuit as illustrated. In part (a), the reference point is *D,* and all voltages are positive with respect to *D.* In part (b), the reference point is *A* in the circuit, and all other points have a negative voltage.

Many circuits use both positive and negative voltages and as mentioned, the return path for these supplies is designated as reference ground. Figure 51(c) shows the same circuit but with two 6 V series-aiding sources replacing the 12 V source. In this case, the reference point is arbitrarily designated between the two voltage sources. There is exactly the same current in all three circuits, but now voltages are referenced to the new ground point. As you can see from these examples, the reference ground point is arbitrary and does not change the current.

Not all voltages are measured with respect to ground. If you wish to specify the voltage drop across an ungrounded resistor, you can name the resistor in the subscript or use two-lettered subscripts. When two different subscripts are used, the voltage represents the difference between the points. For example, V_{BC} means $V_B - V_C$. In Figure 51, V_{BC} is the same in all three circuits (+4.0 V) as you can confirm by performing the subtraction in each case. Another way of designating V_{BC} is to write simply V_{R2}.

There is one more convention commonly used to express voltages using subscripts. Power supply voltages are usually given with a double-letter subscript. The reference point is ground or common. For example, a voltage written as V_{CC} is a positive power supply voltage with respect to ground. Other common power supply voltages are V_{DD} (positive), V_{EE} (negative), and V_{SS} (negative).

To measure voltages with a digital meter, the meter leads can be connected across any two points and the meter will indicate the voltage, either positive or negative. The meter reference jack is labeled "COM" (normally black). This is common only to the meter, not to the circuit. Figure 52 shows a DMM used to measure the voltage across the ungrounded (floating) resistor R_2. The circuit is the same one given in Figure 51(b), which has a negative power supply. It is shown as it might be constructed in a lab. Notice that the meter indicates a negative voltage, which means that the meter's COM lead is the more positive lead. If you wanted to measure voltages with respect to the circuit's reference ground, you would connect the COM on the meter to the circuit's reference ground. The voltage with respect to the reference ground will be indicated.

If you are using an analog meter to make circuit measurements, you must connect the meter so that its common lead is connected to the most negative point in the circuit, or else the meter movement will try to move backward. Figure 53 shows an analog meter connected to the same circuit as before; notice that the meter leads are reversed. To measure voltage across R_2, the leads must be connected so that the meter will deflect in the positive

www.EngineeringBooksPdf.com

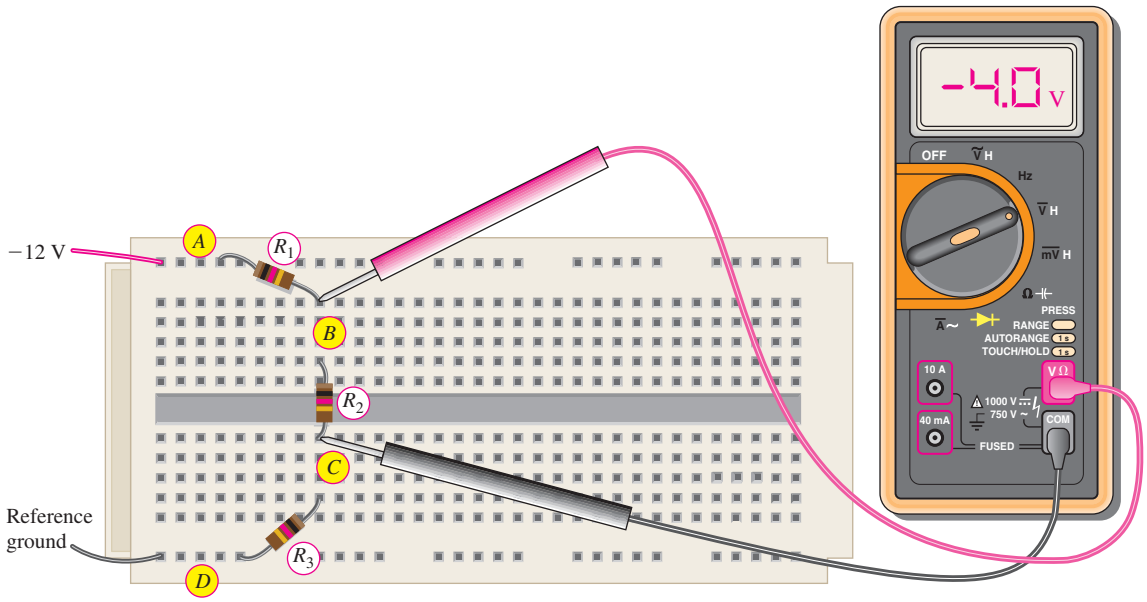

▲ **FIGURE 52**

A DMM has a "floating" common, so the leads can be connected to any points in the circuit and it will indicate the correct voltage between the two leads.

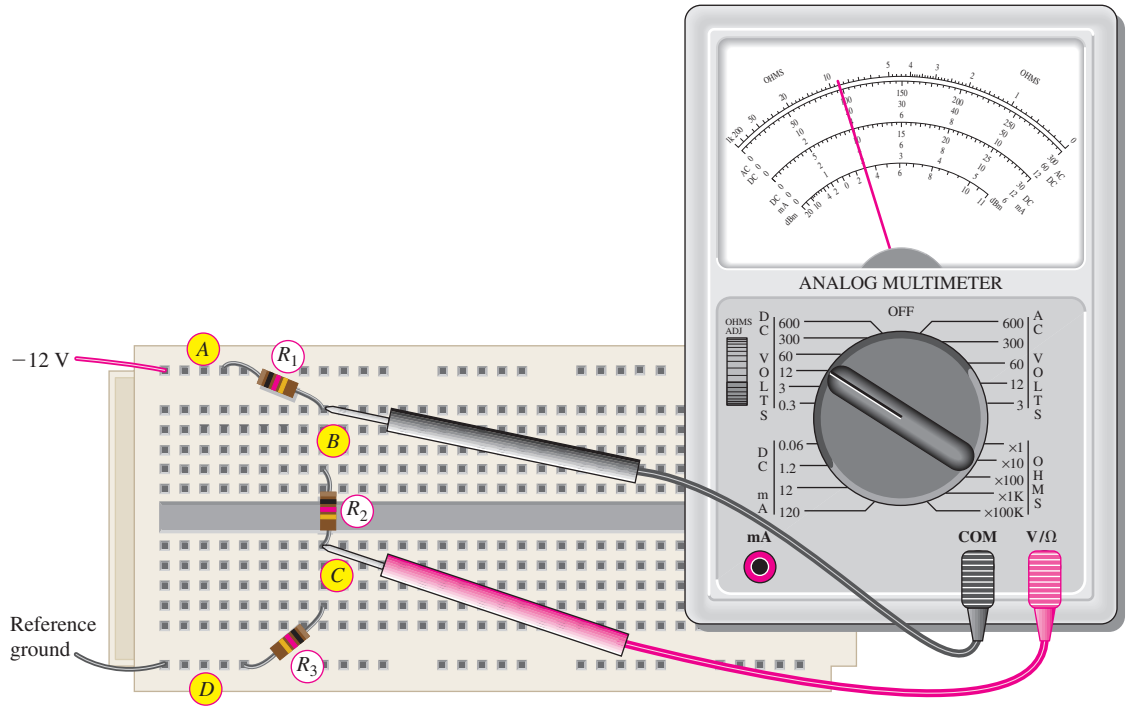

▲ **FIGURE 53**

An analog meter needs to be connected so that the positive lead goes to the more positive point in the circuit.

www.EngineeringBooksPdf.com

direction. The positive lead on the meter is connected to the more positive point in the circuit, which in this case is the circuit's ground. The user appends a minus sign to the reading when recording the reading.

EXAMPLE 21

Determine the voltages at each of the indicated points in each circuit of Figure 54 with respect to ground. Since each of the four resistors has the same value, 25 V are dropped across each one.

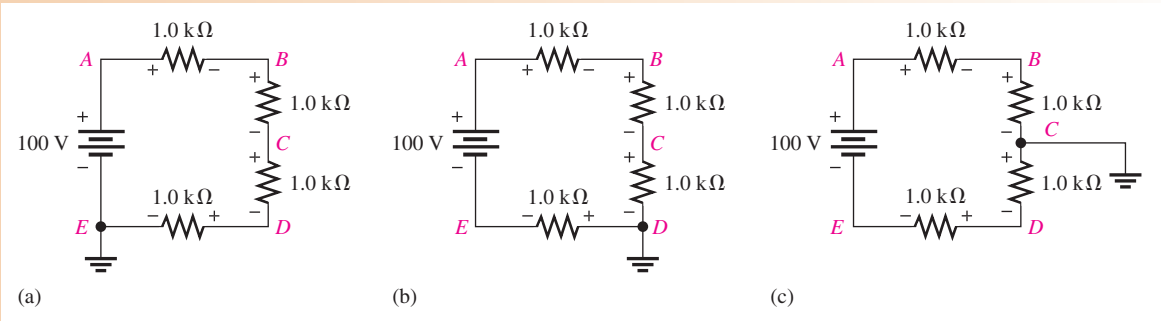

▲ FIGURE 54

Solution For the circuit in Figure 54(a), the voltage polarities are as shown. Point E is ground. Single-letter subscripts denote voltage at a point with respect to ground. The voltages with respect to ground are as follows:

$$V_E = \mathbf{0\ V}, \quad V_D = \mathbf{+25\ V}, \quad V_C = \mathbf{+50\ V}, \quad V_B = \mathbf{+75\ V}, \quad V_A = \mathbf{+100\ V}$$

For the circuit in Figure 54(b), the voltage polarities are as shown. Point D is ground. The voltages with respect to ground are as follows:

$$V_E = \mathbf{-25\ V}, \quad V_D = \mathbf{0\ V}, \quad V_C = \mathbf{+25\ V}, \quad V_B = \mathbf{+50\ V}, \quad V_A = \mathbf{+75\ V}$$

For the circuit in Figure 54(c), the voltage polarities are as shown. Point C is ground. The voltages with respect to ground are as follows:

$$V_E = \mathbf{-50\ V}, \quad V_D = \mathbf{-25\ V}, \quad V_C = \mathbf{0\ V}, \quad V_B = \mathbf{+25\ V}, \quad V_A = \mathbf{+50\ V}$$

Related Problem If the ground is moved to point A in Figure 54(a), what are the voltages at each of the other points with respect to ground?

Open Multisim file E04-21. For each circuit, verify the values of the voltages at each point with respect to ground. Repeat for the related problem.

SECTION 9 CHECKUP

1. What is the reference point in a circuit called?
2. If V_{AB} in a circuit is +5.0 V, what is V_{BA}?
3. Voltages in a circuit are generally referenced to ground. (True or False)
4. The housing or chassis can be used as reference ground. (True or False)

www.EngineeringBooksPdf.com

10 TROUBLESHOOTING

Open components or contacts and shorts between conductors are common problems in all circuits. An open produces an infinite resistance. A short produces a zero resistance.

After completing this section, you should be able to

- **Troubleshoot series circuits**
  - Check for an open circuit
  - Check for a short circuit
  - Identify primary causes of opens and shorts

Open Circuit

The most common failure in a series circuit is an **open**. For example, when a resistor or a lamp burns out, it creates an open, causing a break in the current path, as illustrated in Figure 55.

An open in a series circuit prevents current.

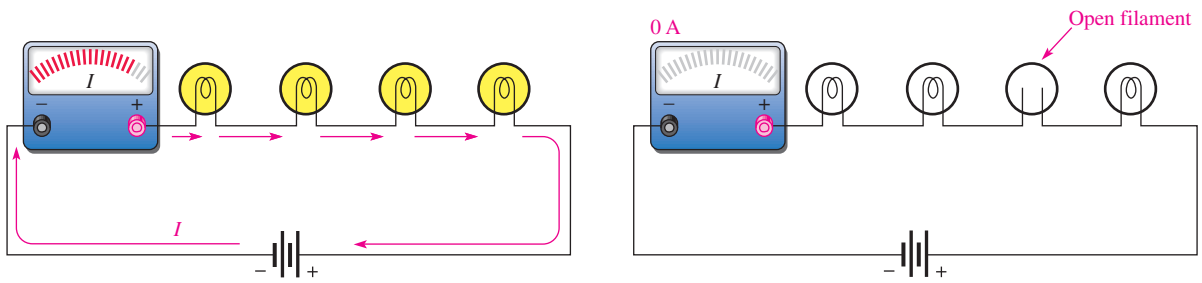

(a) A complete series circuit has current.

(b) An open series circuit has no current.

▲ FIGURE 55

Current ceases when an open occurs.

Troubleshooting an Open Keep in mind the analysis, planning, and measurement (APM) approach to troubleshooting and the half-splitting method using an ohmmeter. Now, the same principles will be applied using voltage measurements instead of resistance measurements. As you know, voltage measurements are generally the easiest to make because you do not have to disconnect anything.

As a beginning step, prior to analysis, it is a good idea to make a visual check of the faulty circuit. Occasionally, you can find a charred resistor, a broken lamp filament, a loose wire, or a loose connection this way. However, it is possible (and probably more common) for a resistor or other component to open without showing visible signs of damage. When a visual check reveals nothing, then proceed with the APM approach.

When an open occurs in a series circuit, all of the source voltage appears across the open. The reason for this is that the open condition prevents current through the series circuit. With no current, there can be no voltage drop across any of the other resistors (or other component). Since $IR = (0\text{ A})R = 0\text{ V}$, the voltage on each end of a good resistor is the same. Therefore, the voltage applied across a series string also appears across the open component because there are no other voltage drops in the circuit, as illustrated in

www.EngineeringBooksPdf.com

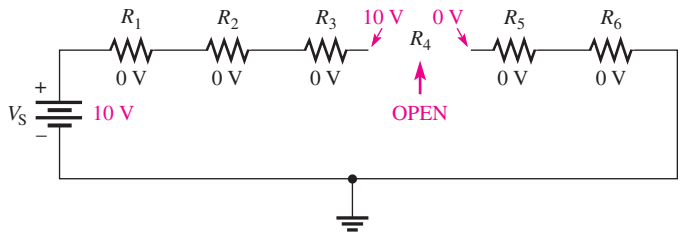

◀ **FIGURE 56**

The source voltage appears across the open series resistor.

Figure 56. The source voltage will appear across the open resistor in accordance with Kirchhoff's voltage law as follows:

$$V_S = V_1 + V_2 + V_3 + V_4 + V_5 + V_6$$
$$V_4 = V_S - V_1 - V_2 - V_3 - V_5 - V_6$$
$$= 10\text{ V} - 0\text{ V} - 0\text{ V} - 0\text{ V} - 0\text{ V} - 0\text{ V}$$
$$V_4 = V_S = 10\text{ V}$$

Example of Half-Splitting Using Voltage Measurements Suppose a circuit has four resistors in series. You have determined by *analyzing* the symptoms (there is voltage but no current) that one of the resistors is open, and you are *planning* to find the open resistor using a voltmeter for *measuring* by the half-splitting method. A sequence of measurements for this particular case is illustrated in Figure 57.

Step 1: Measure across R_1 and R_2 (the left half of the circuit). A 0 V reading indicates that neither of these resistors is open.

Step 2: Move the meter to measure across R_3 and R_4; the reading is 10 V. This indicates there is an open in the right half of the circuit, so either R_3 or R_4 is the faulty resistor (assume no bad connections).

Step 3: Move the meter to measure across R_3. A measurement of 10 V across R_3 identifies it as the open resistor. If you had measured across R_4, it would have indicated 0 V. This would have also identified R_3 as the faulty component because it would have been the only one left that could have 10 V across it.

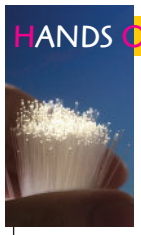

HANDS ON TIP

When measuring a resistance, make sure that you do not touch the meter leads or the resistor leads. If you hold both ends of a high-value resistor in your fingers along with the meter probes, the measurement will be inaccurate because your body resistance can affect the measured value. When body resistance is placed in parallel with a high-value resistor, the measured value will be less than the actual value of the resistor.

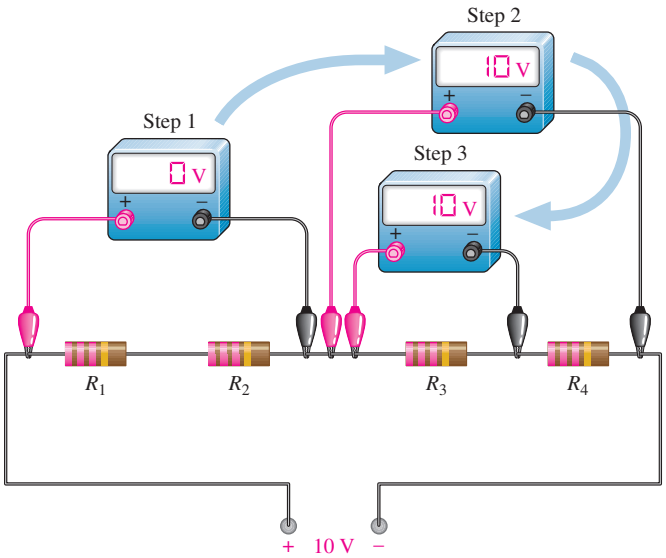

▲ **FIGURE 57**

Troubleshooting a series circuit for an open using half-splitting.

www.EngineeringBooksPdf.com

Short Circuit

Sometimes an unwanted short circuit occurs when two conductors touch or a foreign object such as solder or a wire clipping accidentally connects two sections of a circuit together. This situation is particularly common in circuits with a high component density. Three potential causes of short circuits are illustrated on the PC board in Figure 58.

▶ **FIGURE 58**

Examples of shorts on a PC board.

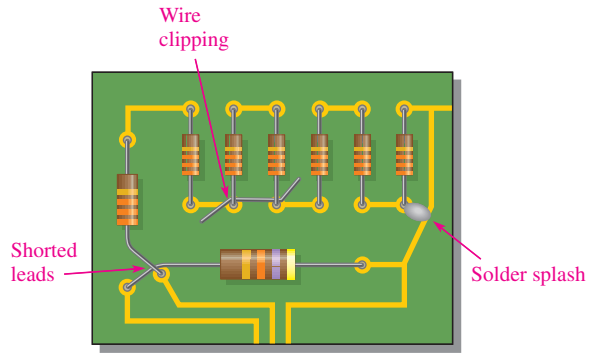

When there is a **short**, a portion of the series resistance is bypassed (all of the current goes through the short), thus reducing the total resistance as illustrated in Figure 59. Notice that the current increases as a result of the short.

A short in a series circuit causes more current.

▶ **FIGURE 59**

The effect of a short in a series circuit.

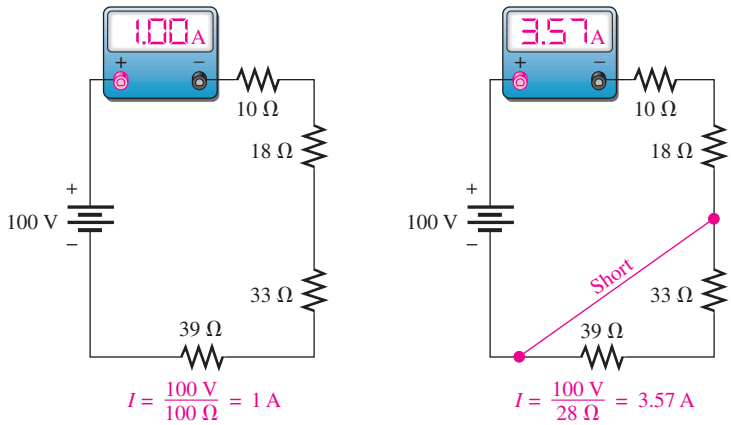

(a) Before short (b) After short

Troubleshooting a Short A short is generally very difficult to troubleshoot. As in any troubleshooting situation, it is a good idea to make a visual check of the faulty circuit. In the case of a short in the circuit, a wire clipping, solder splash, or touching leads is often found to be the culprit. In terms of component failure, shorts are less common than opens in many types of components. Furthermore, a short in one part of a circuit can cause overheating in another part due to the higher current caused by the short. As a result two failures, an open and a short, may occur together.

When a short occurs in a series circuit, there is essentially no voltage across the shorted part. A short has zero or near zero resistance, although shorts with significant resistance values can occur from time to time. These are called *resistive shorts.* For purposes of illustration, zero resistance is assumed for all shorts.

In order to troubleshoot a short, measure the voltage across each resistor until you get a reading of 0 V. This is the straightforward approach and does not use half-splitting. In order

www.EngineeringBooksPdf.com

to apply the half-splitting method, you must know the correct voltage at each point in the circuit and compare it to measured voltages. Example 22 illustrates using half-splitting to find a short.

EXAMPLE 22

Assume you have determined that there is a short in a circuit with four series resistors because the current is higher than it should be. You know that the voltage at each point in the circuit should be as shown in Figure 60 if the circuit is working properly. The voltages are shown relative to the negative terminal of the source. Find the location of the short.

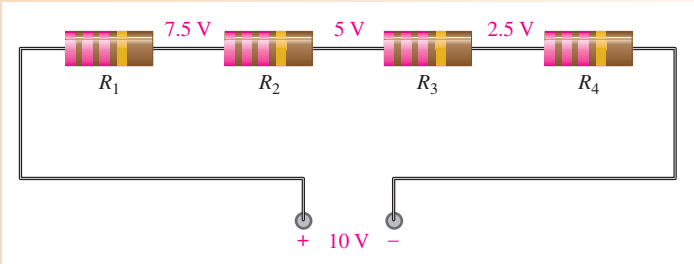

▶ **FIGURE 60**

Series circuit (without a short) with correct voltages marked.

Solution Use the half-splitting method to troubleshoot the short.

Step 1: Measure across R_1 and R_2. The meter shows a reading of 6.67 V, which is higher than the normal voltage (it should be 5 V). Look elsewhere for a voltage that is lower than normal because a short will make the voltage less across that part of the circuit.

Step 2: Move the meter and measure across R_3 and R_4; the reading of 3.33 V is incorrect and lower than normal (it should be 5 V). This shows that the short is in the right half of the circuit and that either R_3 or R_4 is shorted.

Step 3: Again move the meter and measure across R_3. A reading of 3.3 V across R_3 tells you that R_4 is shorted because it must have 0 V across it. Figure 61 illustrates this troubleshooting technique.

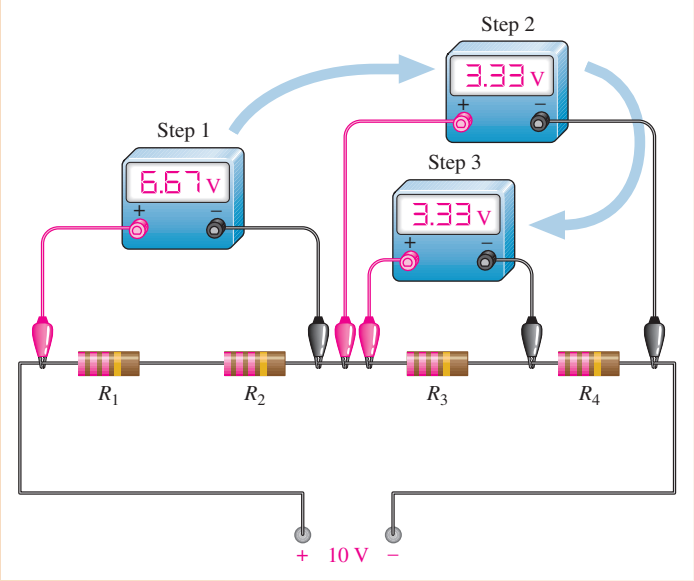

▶ **FIGURE 61**

Troubleshooting a series circuit for a short using half-splitting.

Related Problem Assume that R_1 is shorted in Figure 61. What would the Step 1 measurement be?

www.EngineeringBooksPdf.com

SECTION 10 CHECKUP

1. Define *open.*
2. Define *short.*
3. What happens when a series circuit opens?
4. Name two general ways in which an open circuit can occur in practice. How can a short circuit occur?
5. When a resistor fails, it will normally open. (True or False)
6. The total voltage across a string of series resistors is 24 V. If one of the resistors is open, how much voltage is there across it? How much is there across each of the good resistors?
7. Explain why the voltage measured in Step 1 of Figure 61 is higher than normal.

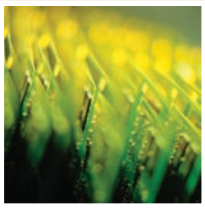

Application Assignment

PUTTING YOUR KNOWLEDGE TO WORK

For this assignment, suppose your supervisor has given you a voltage-divider board to evaluate and modify if necessary. You will use it to obtain five different voltage levels from a 12 V battery that has a 6.5 Ah rating. The voltage divider provides positive reference voltages to an electronic circuit in an analog-to-digital converter. Your job will be to check the circuit to see if it provides the following voltages within a tolerance of ±5% with respect to the negative side of the battery: 10.4 V, 8.0 V, 7.3 V, 6.0 V, and 2.7 V. If the existing circuit does not provide the specified voltages, you will modify it so that it does. Also, you must make sure that the power ratings of the resistors are adequate for the application and determine how long the battery will last with the voltage divider connected to it.

Step 1: Drawing the Schematic of the Circuit

Use Figure 62 to determine the resistor values and draw the schematic of the voltage-divider circuit. All the resistors on the board are 0.25 W.

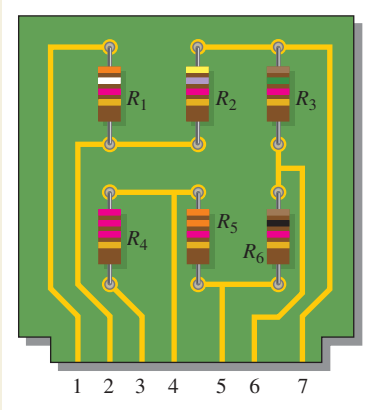

▲ FIGURE 62

Step 2: Determining the Voltages

Determine each output voltage on the existing circuit board when the positive side of the 12 V battery is connected to pin 3 and the negative side is connected to pin 1. Compare the existing output voltages to the following specifications:

Pin 1: negative terminal of 12 V battery

Pin 2: 2.7 V ± 5%

Pin 3: positive terminal of 12 V battery

Pin 4: 10.4 V ± 5%

Pin 5: 8.0 V ± 5%

Pin 6: 7.3 V ± 5%

Pin 7: 6.0 V ± 5%

Step 3: Modifying the Existing Circuit (if necessary)

If the output voltages of the existing circuit are not the same as those stated in the specifications of Step 2, make the necessary changes in the circuit to meet the specifications. Draw a schematic of the modified circuit showing resistor values and adequate power ratings.

Step 4: Determining the Life of the Battery

Find the total current drawn from the 12 V battery when the voltage-divider circuit is connected and determine how many days the 6.5 Ah battery will last.

Step 5: Developing a Test Procedure

Determine how you would test the voltage-divider board and what instruments you would use. Then detail your test procedure in a step-by-step format.

www.EngineeringBooksPdf.com

Step 6: Troubleshooting the Circuit

Determine the most likely fault for each of the following cases (voltages are with respect to the negative battery terminal (pin 1 on the circuit board):

1. No voltage at any of the pins on the circuit board
2. 12 V at pins 3 and 4. All other pins have 0 V.
3. 12 V at all pins except 0 V at pin 1
4. 12 V at pin 6 and 0 V at pin 7
5. 3.3 V at pin 2

Multisim Analysis

1. Using Multisim, connect the circuit based on the schematic from Step 1 and verify the output voltages specified in Step 2.
2. Insert faults determined in Step 6 and verify the resulting voltage measurements.

Review

1. What is the total power dissipated by the voltage-divider circuit with a 12 V battery?
2. What are the output voltages from the voltage divider if the positive terminal of a 6 V battery is connected to pin 3 and the negative terminal to pin 1?
3. When the voltage-divider board is connected to the electronic circuit to which it is providing positive reference voltages, which pin on the board should be connected to the ground of the electronic circuit?

SUMMARY

- The total series resistance is the sum of all resistors in the series circuit.
- The total resistance between any two points in a series circuit is equal to the sum of all resistors connected in series between those two points.
- If all of the resistors in a series circuit are of equal value, the total resistance is the number of resistors multiplied by the resistance value of one resistor.
- The current is the same at all points in a series circuit.
- Voltage sources in series add algebraically.
- Kirchhoff's voltage law: The sum of the voltage drops in a series circuit equals the total source voltage.
- Kirchhoff's voltage law: the algebraic sum of all the voltages around a closed single path is zero.
- The voltage drops in a circuit are always opposite in polarity to the total source voltage.
- Current is defined to be out of the negative side of a source and into the positive side.
- Current is defined to be into the negative side of each resistor and out of the positive side.
- A voltage divider is a series arrangement of resistors connected to a voltage source.
- A voltage divider is so named because the voltage drop across any resistor in the series circuit is divided down from the total voltage by an amount proportional to that resistance value in relation to the total resistance.
- A potentiometer can be used as an adjustable voltage divider.
- The total power in a resistive circuit is the sum of all the individual powers of the resistors making up the series circuit.
- Voltages given with a single-lettered subscript are referenced to ground. When two different letters are used in the subscript, the voltage is the difference in the two points.
- Ground (common) is zero volts with respect to all points referenced to it in the circuit.
- *Negative ground* is the term used when the negative side of the source is grounded.
- *Positive ground* is the term used when the positive side of the source is grounded.
- The voltage across an open component always equals the source voltage.
- The voltage across a shorted component is always 0 V.

KEY TERMS

Kirchhoff's voltage law A law stating that (1) the sum of the voltage drops around a single closed path equals the source voltage in that loop or (2) the algebraic sum of all the voltages around a single closed path in a circuit is zero.

www.EngineeringBooksPdf.com

Open A circuit condition in which the current path is interrupted.

Reference ground The metal chassis that houses the assembly or a large conductive area on a printed circuit board used as the common or reference point; also called common (com).

Series In an electric circuit, a relationship of components in which the components are connected such that they provide a single current path between two points.

Series-aiding An arrangement of two or more series voltage sources with polarities in the same direction.

Series-opposing An arrangement of two series voltage sources with polarities in the opposite direction; not a normal configuration.

Short A circuit condition in which there is a zero or abnormally low resistance path between two points: usually an inadvertent condition.

Voltage divider A circuit consisting of series resistors across which one or more output voltages are taken.

FORMULAS

1	$R_T = R_1 + R_2 + R_3 + \cdots + R_n$	Total resistance of n resistors in series
2	$R_T = nR$	Total resistance of n equal-value resistors in series
3	$V_S = V_1 + V_2 + V_3 + \cdots + V_n$	Kirchhoff's voltage law in a series circuit
4	$V_1 + V_2 + V_3 + \cdots + V_n = 0$	Kirchhoff's voltage law
5	$V_x = \left(\frac{R_x}{R_T}\right)V_S$	Voltage-divider formula
6	$P_T = P_1 + P_2 + P_3 + \cdots + P_n$	Total power

TRUE/FALSE QUIZ

Answers are at the end of the chapter.

1. A series circuit can have more than one path for current.
2. The total resistance of a series circuit can be less than the largest resistor in that circuit.
3. If two series resistors are different sizes, the larger resistor will have the larger current.
4. If two series resistors are different sizes, the larger resistor will have the larger voltage.
5. If three equal resistors are used in a voltage divider, the voltage across each one will be one-third of the source voltage.
6. There is no valid electrical reason for installing flashlight batteries so that they are series-opposing.
7. Kirchhoff's voltage law is valid only if a loop contains a voltage source.
8. The voltage-divider equation can be written as $V_x = (R_x/R_T)V_S$.
9. The power dissipated by the resistors in a series circuit is the same as the power supplied by the source.
10. If point A in a circuit has a voltage of +10 V and point B has a voltage of −2 V, then V_{AB} is +8 V.

SELF-TEST

Answers are at the end of the chapter.

1. Five equal-value resistors are connected in series and there is a current of 2 mA into the first resistor. The amount of current out of the second resistor is

   (a) 2 mA **(b)** 1 mA **(c)** 4 mA **(d)** 0.4 mA

2. To measure the current out of the third resistor in a circuit consisting of four series resistors, an ammeter can be placed

   (a) between the third and fourth resistors **(b)** between the second and third resistors
   (c) at the positive terminal of the source **(d)** at any point in the circuit

www.EngineeringBooksPdf.com

3. When a third resistor is connected in series with two series resistors, the total resistance
   (a) remains the same **(b)** increases **(c)** decreases **(d)** increases by one-third
4. When one of four series resistors is removed from a circuit and the circuit reconnected, the current
   (a) decreases by the amount of current through the removed resistor
   (b) decreases by one-fourth **(c)** quadruples **(d)** increases
5. A series circuit consists of three resistors with values of 100 Ω, 220 Ω, and 330 Ω. The total resistance is
   (a) less than 100 Ω **(b)** the average of the values **(c)** 550 Ω **(d)** 650 Ω
6. A 9 V battery is connected across a series combination of 68 Ω, 33 Ω, 100 Ω, and 47 Ω resistors. The amount of current is
   (a) 36.3 mA **(b)** 27.6 A **(c)** 22.3 mA **(d)** 363 mA
7. While putting four 1.5 V batteries in a flashlight, you accidentally put one of them in backward. The light will be
   (a) brighter than normal **(b)** dimmer than normal **(c)** off **(d)** the same
8. If you measure all the voltage drops and the source voltage in a series circuit and add them together, taking into consideration the polarities, you will get a result equal to
   (a) the source voltage **(b)** the total of the voltage drops
   (c) zero **(d)** the total of the source voltage and the voltage drops
9. There are six resistors in a given series circuit and each resistor has 5 V dropped across it. The source voltage is
   (a) 5 V **(b)** 30 V
   (c) dependent on the resistor values **(d)** dependent on the current
10. A series circuit consists of a 4.7 kΩ, a 5.6 kΩ, and a 10 kΩ resistor. The resistor that has the most voltage across it is
    (a) the 4.7 kΩ **(b)** the 5.6 kΩ
    (c) the 10 kΩ **(d)** impossible to determine from the given information
11. Which of the following series combinations dissipates the most power when connected across a 100 V source?
    (a) one 100 Ω resistor **(b)** two 100 Ω resistors
    (c) three 100 Ω resistors **(d)** four 100 Ω resistors
12. The total power in a certain circuit is 1 W. Each of the five equal-value series resistors making up the circuit dissipates
    (a) 1 W **(b)** 5 W **(c)** 0.5 W **(d)** 0.2 W
13. When you connect an ammeter in a series resistive circuit and turn on the source voltage, the meter reads zero. You should check for
    (a) a broken wire **(b)** a shorted resistor **(c)** an open resistor **(d)** both (a) and (c)
14. While checking out a series resistive circuit, you find that the current is higher than it should be. You should look for
    (a) an open circuit **(b)** a short **(c)** a low resistor value **(d)** both (b) and (c)

TROUBLESHOOTING: SYMPTOM AND CAUSE

The purpose of these exercises is to help develop thought processes essential to troubleshooting. Answers are at the end of the chapter.

Determine the cause for each set of symptoms. Refer to Figure 63.

1. *Symptom:* The ammeter reading is zero, the voltmeter 1 and voltmeter 3 readings are zero, and the voltmeter 2 reading is 10 V.

   Cause:

   (a) R_1 is open.
   (b) R_2 is open.
   (c) R_3 is open.

www.EngineeringBooksPdf.com

▶ FIGURE 63

The meters indicate the correct readings for this circuit.

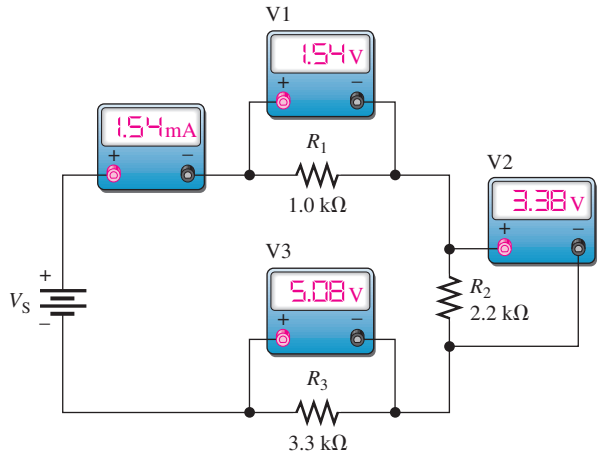

2. *Symptom:* The ammeter reading is zero, and all the voltmeter readings are zero.

   Cause:

   (a) A resistor is open.

   (b) The voltage source is turned off or faulty.

   (c) One of the resistor values is too high.

3. *Symptom:* The ammeter reading is 2.33 mA, and the voltmeter 2 reading is zero.

   Cause:

   (a) R_1 is shorted. **(b)** The voltage source is set too high. **(c)** R_2 is shorted.

4. *Symptom:* The ammeter reading is zero, voltmeter 1 reads 0 V, voltmeter 2 reads 5 V, and voltmeter 3 reads 5 V.

   Cause:

   (a) R_1 is shorted. **(b)** R_1 and R_2 are open. **(c)** R_2 and R_3 are open.

5. *Symptom:* The ammeter reading is 0.645 mA, the voltmeter 1 reading is too high, and the other two voltmeter readings are too low.

   Cause:

   (a) R_1 has an incorrect value of 10 kΩ.

   (b) R_2 has an incorrect value of 10 kΩ.

   (c) R_3 has an incorrect value of 10 kΩ.

PROBLEMS

Answers to odd-numbered problems are at the end of the chapter.

BASIC PROBLEMS

SECTION 1 Resistors in Series

1. Connect each set of resistors in Figure 64 in series between points *A* and *B*.

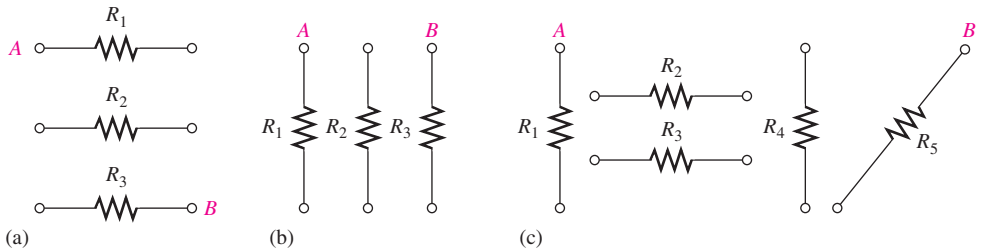

▲ FIGURE 64

www.EngineeringBooksPdf.com

2. Determine which resistors in Figure 65 are in series. Show how to interconnect the pins to put all the resistors in series.
3. Determine the resistance between pins 1 and 8 in the circuit board in Figure 65.
4. Determine the resistance between pins 2 and 3 in the circuit board in Figure 65.

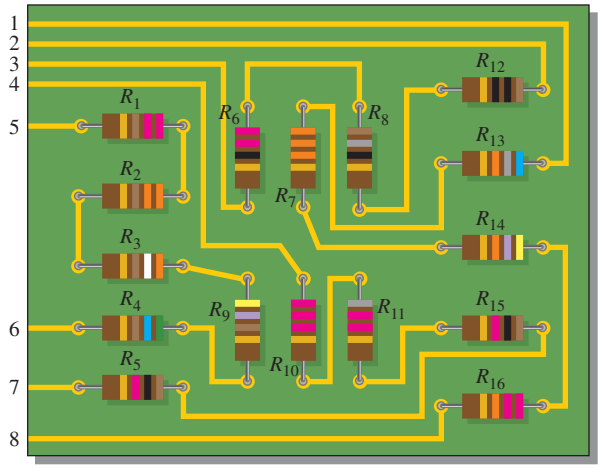

▲ FIGURE 65

SECTION 2 Total Series Resistance

5. An 82 Ω resistor and a 56 Ω resistor are connected in series. What is the total resistance?
6. Find the total resistance of each group of series resistors shown in Figure 66.

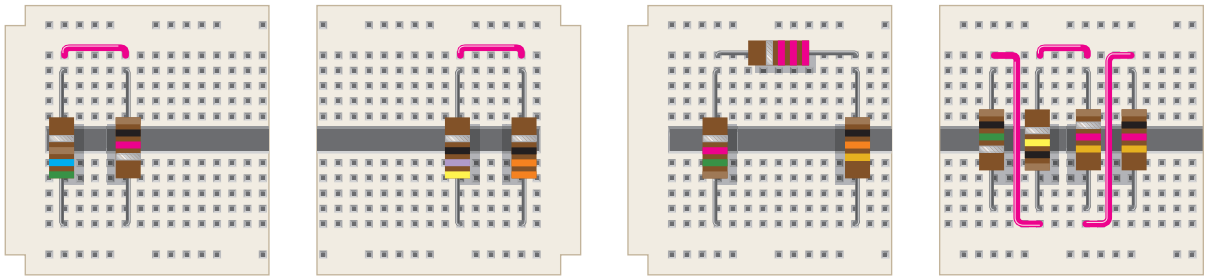

▲ FIGURE 66

7. Determine R_T for each circuit in Figure 67. Show how to measure R_T with an ohmmeter.

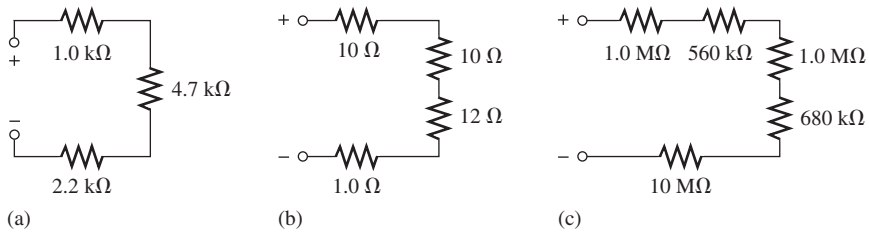

▲ FIGURE 67

www.EngineeringBooksPdf.com

8. What is the total resistance of twelve 5.6 kΩ resistors in series?
9. Six 47 Ω resistors, eight 100 Ω resistors, and two 22 Ω resistors are in series. What is the total resistance?
10. The total resistance in Figure 68 is 20 kΩ. What is the value of R_5?

▶ FIGURE 68

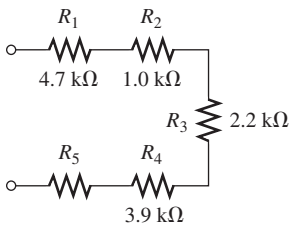

11. Determine the resistance between each of the following sets of pins on the PC board in Figure 65.
    (a) pin 1 and pin 8 **(b)** pin 2 and pin 3
    (c) pin 4 and pin 7 **(d)** pin 5 and pin 6
12. If all the resistors in Figure 65 are connected in series, what is the total resistance?

SECTION 3 Current in a Series Circuit

13. What is the current through each of four resistors in a series circuit if the source voltage is 12 V and the total resistance is 120 Ω?
14. The current from the source in Figure 69 is 5 mA. How much current does each milliammeter in the circuit indicate?

▶ FIGURE 69

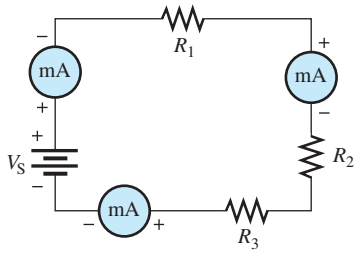

SECTION 4 Application of Ohm's Law

15. What is the current in each circuit of Figure 70? Show how to connect an ammeter in each case.

▶ FIGURE 70

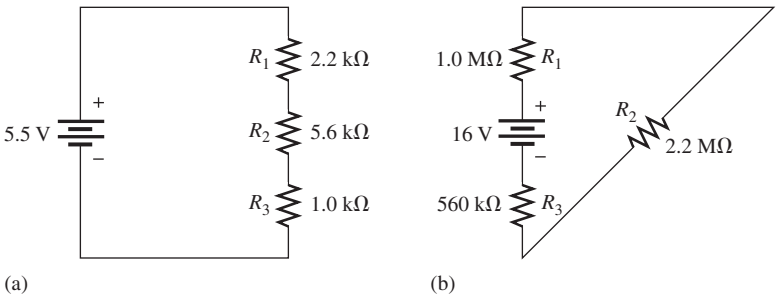

16. Determine the voltage across each resistor in Figure 70.
17. Three 470 Ω resistors are in series with a 48 V source.
    (a) How much current is there?
    (b) What is the voltage across each resistor?
    (c) What is the minimum power rating of the resistors?
18. Four equal-value resistors are in series with a 5 V source, and a current of 1 mA is measured. What is the value of each resistor?

www.EngineeringBooksPdf.com

SECTION 5 Voltage Sources in Series

19. Show how to connect four 6 V batteries to achieve a voltage of 24 V.

20. What happens if one of the batteries in Problem 19 is accidentally connected in reverse?

SECTION 6 Kirchhoff's Voltage Law

21. The following voltage drops are measured across each of three resistors in series: 5.5 V, 8.2 V, and 12.3 V. What is the value of the source voltage to which these resistors are connected?

22. Five resistors are in series with a 20 V source. The voltage drops across four of the resistors are 1.5 V, 5.5 V, 3 V, and 6 V. How much voltage is across the fifth resistor?

23. Determine the unspecified voltage drop(s) in each circuit of Figure 71. Show how to connect a voltmeter to measure each unknown voltage drop.

▶ FIGURE 71

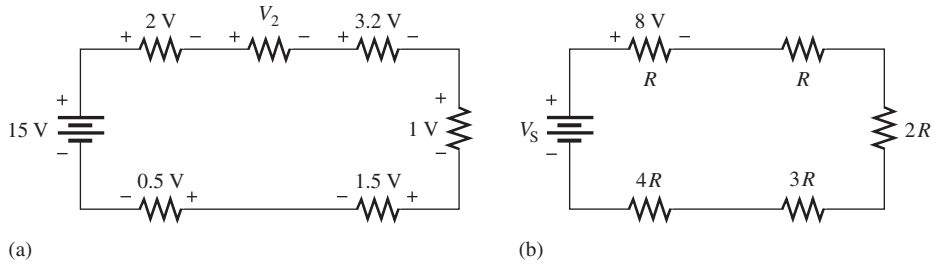

SECTION 7 Voltage Dividers

24. The total resistance of a series circuit is 500 Ω. What percentage of the total voltage appears across a 22 Ω resistor in the series circuit?

25. Find the voltage between *A* and *B* in each voltage divider of Figure 72.

▶ FIGURE 72

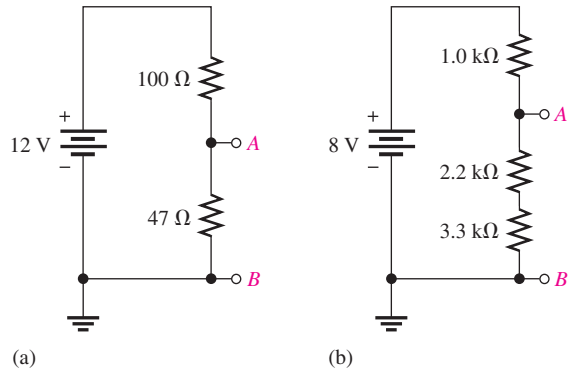

26. Determine the voltage with respect to ground for output *A*, *B*, and *C* in Figure 73(a).

27. Determine the minimum and maximum output voltage from the voltage divider in Figure 73(b).

▶ FIGURE 73

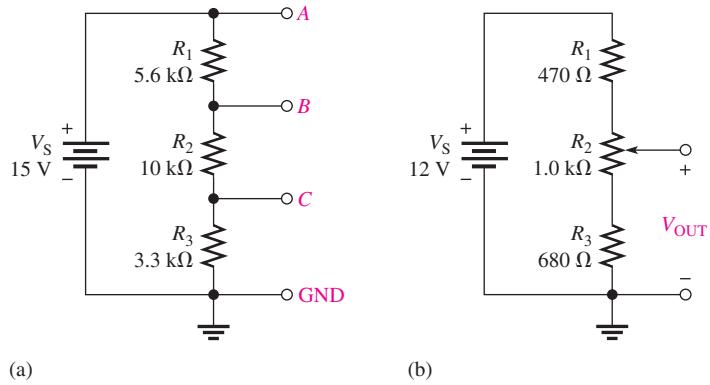

www.EngineeringBooksPdf.com

28. What is the voltage across each resistor in Figure 74? R is the lowest value and all others are multiples of that value as indicated.

▶ FIGURE 74

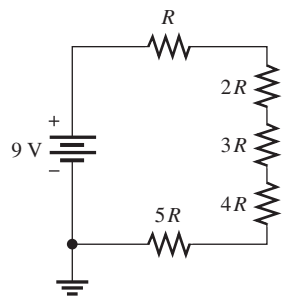

29. What is the voltage across each resistor on the protoboard in Figure 75(b)?

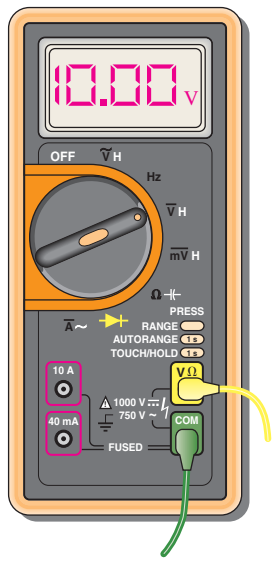

(a) Meter with leads going to protoboard

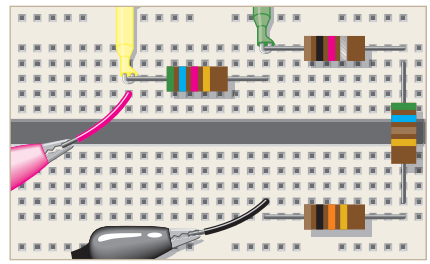

(b) Protoboard with meter leads (yellow and green) and power supply leads (red and black) connected

▲ FIGURE 75

SECTION 8 Power in Series Circuits

30. Five series resistors each dissipate 50 mW of power. What is the total power?

31. Find the total power in Figure 75.

SECTION 9 Voltage Measurements

32. Determine the voltage at each point with respect to ground in Figure 76.

▶ FIGURE 76

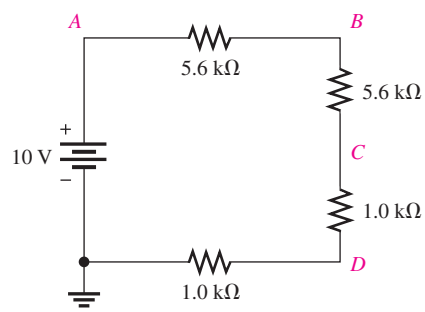

www.EngineeringBooksPdf.com

33. In Figure 77, how would you determine the voltage across R_2 by measurement, without connecting a meter directly across the resistor?

34. Determine the voltage at each point with respect to ground in Figure 77.

35. In Figure 77, what is V_{AC}?

36. In Figure 77, what is V_{CA}?

▶ FIGURE 77

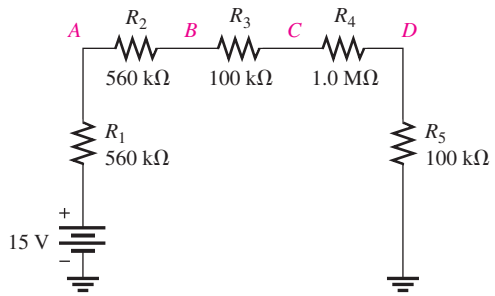

SECTION 10 Troubleshooting

37. By observing the meters in Figure 78, determine the types of failures in the circuits and which components have failed.

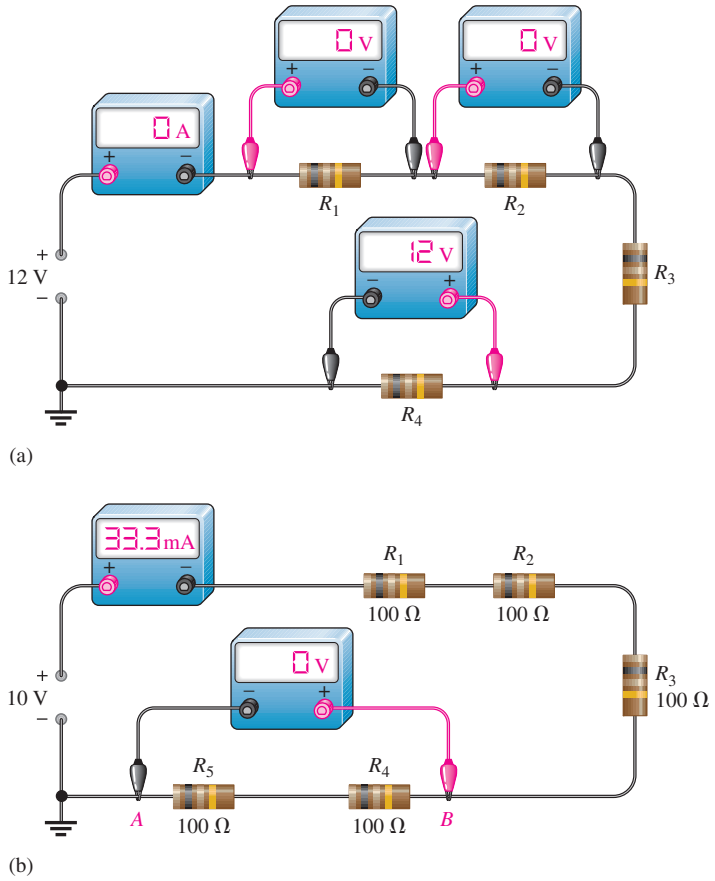

▲ FIGURE 78

www.EngineeringBooksPdf.com

38. Is the multimeter reading in Figure 79 correct? If not, what is wrong?

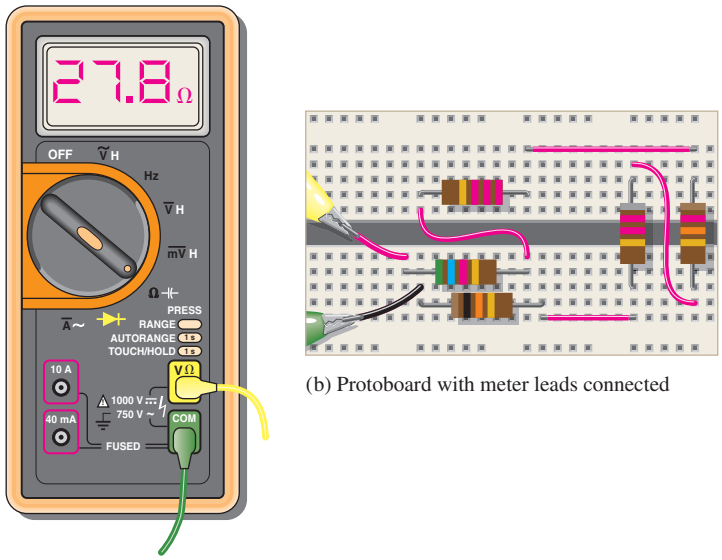

(a) Meter with leads going to protoboard

(b) Protoboard with meter leads connected

▲ FIGURE 79

ADVANCED PROBLEMS

39. Determine the unknown resistance (R_3) in the circuit of Figure 80.

▶ FIGURE 80

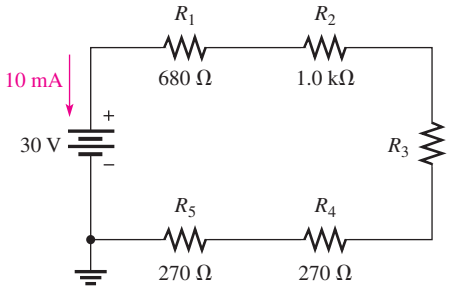

40. You have the following resistor values available to you in the lab in unlimited quantities: 10 Ω, 100 Ω, 470 Ω, 560 Ω, 680 Ω, 1.0 kΩ, 2.2 kΩ, and 5.6 kΩ. All of the other standard values are out of stock. A project that you are working on requires an 18 kΩ resistance. What combination of available values can you use to obtain the needed value?

41. Determine the voltage at each point in Figure 81 with respect to ground.

▶ FIGURE 81

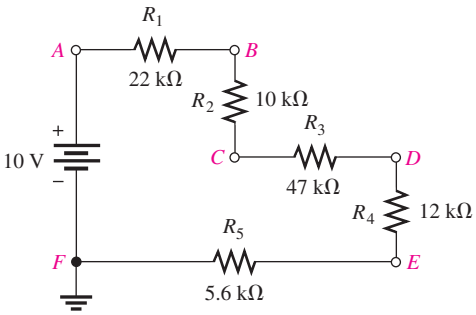

www.EngineeringBooksPdf.com

42. Find all the unknown quantities (shown in red) in Figure 82.

▶ **FIGURE 82**

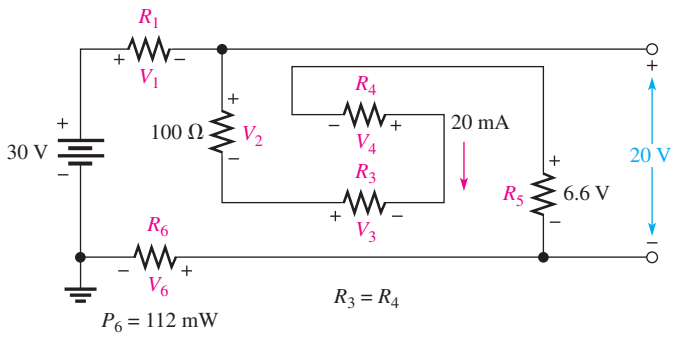

43. There are 250 mA in a series circuit with a total resistance of 1.5 kΩ. The current must be reduced by 25%. Determine how much resistance must be added in order to accomplish this reduction in current.

44. Four ½ W resistors are in series: 47 Ω, 68 Ω, 100 Ω, and 120 Ω. To what maximum value can the current be raised before the power rating of one of the resistors is exceeded? Which resistor will burn out first if the current is increased above the maximum?

45. A certain series circuit is made up of a ⅛ W resistor, a ¼ W resistor, and a ½ W resistor. The total resistance is 2400 Ω. If each of the resistors is operating at its maximum power level, determine the following:

(a) I **(b)** V_S **(c)** the value of each resistor

46. Using 1.5 V batteries, a switch, and three lamps, devise a circuit to apply 4.5 V across one lamp, two lamps in series, or three lamps in series with a single control switch. Draw the schematic.

47. Develop a variable voltage divider to provide output voltages ranging from a minimum of 10 V to a maximum of 100 V using a 120 V source. The maximum voltage must be at the maximum resistance setting of the potentiometer. The minimum voltage must be at the minimum resistance (zero ohms) setting. The current is to be 10 mA.

48. Using the standard resistor values given in the Table of Standard Resistor Values (found at the end of this chapter), design a voltage divider to provide the following approximate voltages with respect to the negative terminal of a 30 V source: 8.18 V, 14.7 V, and 24.6 V. The current drain on the source must be limited to no more than 1 mA. The number of resistors, their resistance values, and their power ratings must be specified. Draw a schematic showing the circuit with all resistor values indicated.

49. On the double-sided PC board in Figure 83, identify each group of series resistors and determine its total resistance. Note that many of the interconnections feed through the board from the top side to the bottom side.

▶ **FIGURE 83**

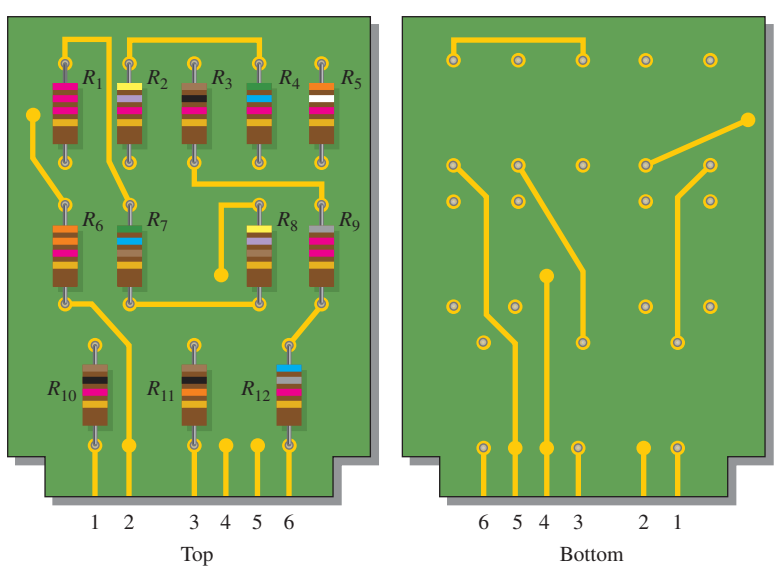

www.EngineeringBooksPdf.com

50. What is the total resistance from A to B for each switch position in Figure 84?

▶ **FIGURE 84**

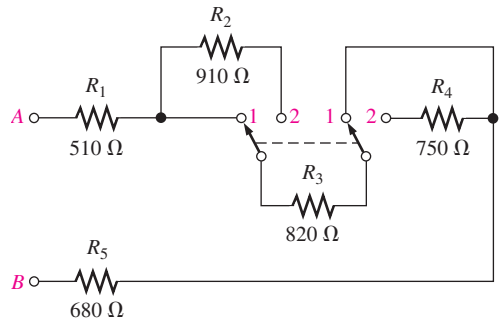

51. Determine the current measured by the meter in Figure 85 for each switch position.

▶ **FIGURE 85**

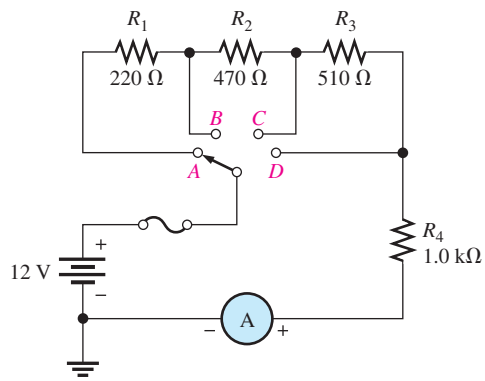

52. Determine the current measured by the meter in Figure 86 for each position of the ganged switch.

▶ **FIGURE 86**

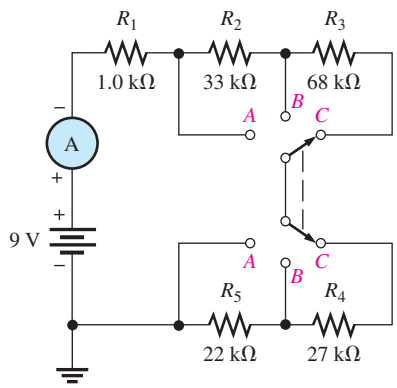

53. Determine the voltage across each resistor in Figure 87 for each switch position if the current through R_5 is 6 mA when the switch is in the D position.

▶ **FIGURE 87**

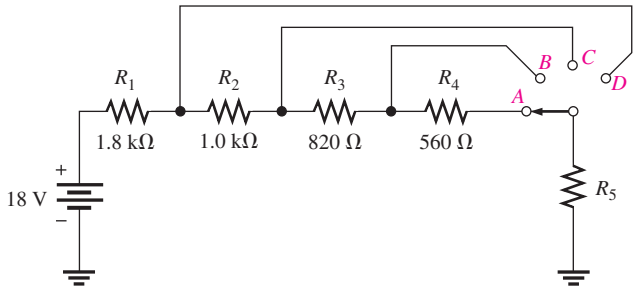

www.EngineeringBooksPdf.com

54. Table 1 shows the results of resistance measurements on the PC circuit board in Figure 83. Are these results correct? If not, identify the possible problems.

▶ **TABLE 1**

BETWEEN PINS	RESISTANCE
1 and 2	∞
1 and 3	∞
1 and 4	4.23 kΩ
1 and 5	∞
1 and 6	∞
2 and 3	23.6 kΩ
2 and 4	∞
2 and 5	∞
2 and 6	∞
3 and 4	∞
3 and 5	∞
3 and 6	∞
4 and 5	∞
4 and 6	∞
5 and 6	19.9 kΩ

55. You measure 15 kΩ between pins 5 and 6 on the PC board in Figure 83. Does this indicate a problem? If so, identify it.

56. In checking out the PC board in Figure 83, you measure 17.83 kΩ between pins 1 and 2. Also, you measure 13.6 kΩ between pins 2 and 4. Does this indicate a problem on the PC board? If so, identify the fault.

57. The three groups of series resistors on the PC board in Figure 83 are connected in series with each other to form a single series circuit by connecting pin 2 to pin 4 and pin 3 to pin 5. A voltage source is connected across pins 1 and 6 and an ammeter is placed in series. As you increase the source voltage, you observe the corresponding increase in current. Suddenly, the current drops to zero and you smell smoke. All resistors are ½ W.

(a) What has happened?

(b) Specifically, what must you do to fix the problem?

(c) At what voltage did the failure occur?

MULTISIM TROUBLESHOOTING PROBLEMS

58. Open file P04-58: Files are found at www.pearsonhighered.com/floyd/. Determine if there is a fault and, if so, identify the fault.

59. Open file P04-59. Determine if there is a fault and, if so, identify the fault.

60. Open file P04-60. Determine if there is a fault and, if so, identify the fault.

61. Open file P04-61. Determine if there is a fault and, if so, identify the fault.

62. Open file P04-62. Determine if there is a fault and, if so, identify the fault.

63. Open file P04-63. Determine if there is a fault and, if so, identify the fault.

ANSWERS

SECTION CHECKUPS

SECTION 1 Resistors in Series

1. Series resistors are connected end-to-end in a "string."
2. There is a single current path in a series circuit.

www.EngineeringBooksPdf.com

3. See Figure 88.

▶ FIGURE 88

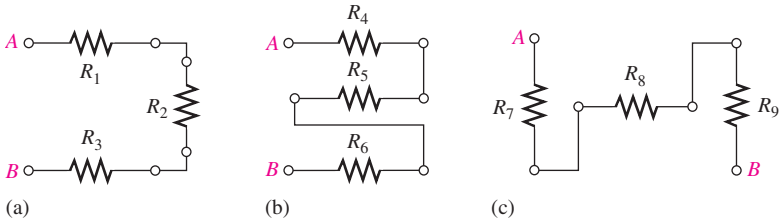

4. See Figure 89.

▶ FIGURE 89

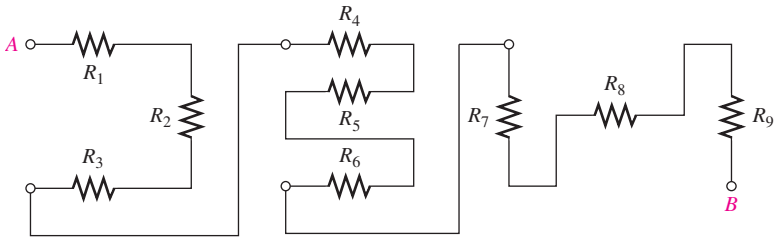

SECTION 2 Total Series Resistance

1. **(a)** $R_T = 33\,\Omega + 100\,\Omega + 10\,\Omega = 143\,\Omega$
   (b) $R_T = 39\,\Omega + 56\,\Omega + 10\,\Omega = 105\,\Omega$
   (c) $R_T = 820\,\Omega + 2200\,\Omega + 1000\,\Omega = 4020\,\Omega$
2. $R_T = 100\,\Omega + 2(47\,\Omega) + 4(12\,\Omega) + 330\,\Omega = 572\,\Omega$
3. $10\,\text{k}\Omega - 8.8\,\text{k}\Omega = 1.2\,\text{k}\Omega$
4. $R_T = 12(47\,\Omega) = 564\,\Omega$

SECTION 3 Current in a Series Circuit

1. The current is the same at all points in a series circuit.
2. There are 20 mA through the 47 Ω resistor.
3. 50 mA between *C* and *D*, 50 mA between *E* and *F*
4. Ammeter 1 indicates 17.9 mA. Ammeter 2 indicates 17.9 mA.

SECTION 4 Ohm's Law in Series Circuits

1. $I = 6\,\text{V}/300\,\Omega = 0.020\,\text{A} = 20\,\text{mA}$
2. $V = (5\,\text{mA})(43\,\Omega) = 125\,\text{mV}$
3. $V_1 = (5\,\text{mA})(10\,\Omega) = 50\,\text{mV}$, $V_2 = (5\,\text{mA})(15\,\Omega) = 75\,\text{mV}$, $V_3 = (5\,\text{mA})(18\,\Omega) = 90\,\text{mV}$
4. $R = 1.25\,\text{V}/4.63\,\text{mA} = 270\,\Omega$
5. $R = 130\,\Omega$

SECTION 5 Voltage Sources in Series

1. 60 V/12 V = 5; see Figure 90.

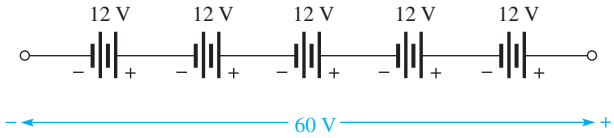

▲ FIGURE 90

www.EngineeringBooksPdf.com

2. $V_T = (4)(1.5\text{ V}) = 6.0\text{ V}$
3. See Figure 91.

▶ FIGURE 91

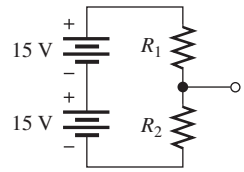

4. $V_{S(tot)} = 6\text{ V} + 15\text{ V} = 21\text{ V}$
5. 3.0 V

SECTION 6 Kirchhoff's Voltage Law

1. Kirchhoff's voltage law states:
   (a) The algebraic sum of the voltages around a closed path is zero.
   (b) The sum of the voltage drops equals the total source voltage.
2. $V_{R(tot)} = V_S = 50\text{ V}$
3. $V_{R1} = V_{R2} = 10\text{ V}/2 = 5\text{ V}$
4. $V_{R3} = 25\text{ V} - 5\text{ V} - 10\text{ V} = 10\text{ V}$
5. $V_S = 1\text{ V} + 3\text{ V} + 5\text{ V} + 7\text{ V} + 8\text{ V} = 24\text{ V}$

SECTION 7 Voltage Dividers

1. A voltage divider is a series circuit with two or more resistors in which the voltage taken across any resistor or combination of resistors is proportional to the value of that resistance.
2. Two or more resistors form a voltage divider.
3. $V_x = (R_x/R_T)V_S$ is the general voltage-divider formula.
4. $V_R = 20\text{ V}/2 = 10\text{ V}$
5. See Figure 92. $V_{R1} = (56\text{ k}\Omega/138\text{ k}\Omega)10\text{ V} = 4.06\text{ V}$, $V_{R2} = (82\text{ k}\Omega/138\text{ k}\Omega)10\text{ V} = 5.94\text{ V}$.
6. Set the potentiometer at the midpoint.

▶ FIGURE 92

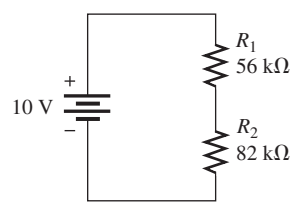

SECTION 8 Power in Series Circuits

1. Add the powers in each resistor to get total power.
2. $P_T = 1\text{ W} + 2\text{ W} = 5\text{ W} + 8\text{ W} = 16\text{ W}$
3. $P_T = (1\text{ mA})^2(100\,\Omega + 330\,\Omega + 680\,\Omega) = 1.11\text{ mW}$

SECTION 9 Voltage Measurements

1. Ground
2. −5.0 V
3. True
4. True

SECTION 10 Troubleshooting

1. An open is a break in the current path.
2. A short is a zero resistance path that bypasses a portion of a circuit.

www.EngineeringBooksPdf.com

3. Current ceases when a series circuit opens.
4. An open can be created by a component failure or a faulty contact. A short can be created by wire clippings, solder splashes, etc.
5. True
6. 24 V across the open R; 0 V across the other resistors.
7. Because R_4 is shorted, more voltage is dropped across the other resistors than normal. The total voltage is divided across three equal-value resistors.

RELATED PROBLEMS FOR EXAMPLES

1 **a.** Left end of R_1 to terminal A, right end of R_1 to top end of R_3, bottom end of R_3 to right end of R_5, left end of R_5 to left end of R_2, right end of R_2 to right end of R_4, left end of R_4 to terminal B

b. $R_1 = 1.0\,\text{k}\Omega$, $R_2 = 33\,\text{k}\Omega$, $R_3 = 39\,\text{k}\Omega$, $R_4 = 470\,\Omega$, $R_5 = 22\,\text{k}\Omega$

2 The two series circuits are connected in series, so all the resistors on the board are in series.

3 258 Ω (No change)

4 12.1 kΩ

5 22 kΩ

6 4.36 kΩ

7 18.5 mA

8 7.8 V

9 $V_1 = 1\text{ V}$, $V_2 = 3.3\text{ V}$, $V_3 = 2.2\text{ V}$, $V_S = 6.5\text{ V}$, $V_{S(max)} = 32.5\text{ V}$

10 275 Ω

11 6 V

12 See Figure 93.

▶ **FIGURE 93**

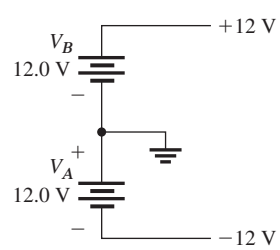

13 10 V, 20 V

14 6.5 V

15 430 Ω

16 $V_1 = 3.13\text{ V}$; $V_2 = 6.87\text{ V}$

17 $V_1 = V_2 = V_3 = 3.33\text{ V}$

18 $V_{AB} = 4\text{ V}$; $V_{AC} = 36.8\text{ V}$; $V_{BC} = 32.8\text{ V}$; $V_{BD} = 46\text{ V}$; $V_{CD} = 13.2\text{ V}$

19 $V_x = \left(\dfrac{R_x}{R_T}\right)V_S$

$$\frac{V_x}{V_S} = \frac{R_x}{R_T} = \frac{R_x}{R + R_x}$$

$$\frac{1.5\text{ V}}{4.5\text{ V}} = \frac{90\,\text{k}\Omega}{R + 90\,\text{k}\Omega}$$

$$1.5\text{ V}(R + 90\,\text{k}\Omega) = (4.5\text{ V})(90\,\text{k}\Omega)$$

$$1.5R = 270\,\Omega$$

$$R = 180\,\Omega$$

www.EngineeringBooksPdf.com

20 9 W

21 $V_A = 0$ V; $V_B = -25$ V; $V_C = -50$ V; $V_D = -75$ V; $V_E = -100$ V

22 3.33 V

TRUE/FALSE QUIZ

1. F **2.** F **3.** F **4.** T **5.** T **6.** T **7.** F **8.** T
9. T **10.** F

SELF-TEST

1. (a) **2.** (d) **3.** (b) **4.** (d) **5.** (d) **6.** (a) **7.** (b)
8. (c) **9.** (b) **10.** (c) **11.** (a) **12.** (d) **13.** (d) **14.** (d)

TROUBLESHOOTING: SYMPTOM AND CAUSE

1. (b)
2. (b)
3. (c)
4. (c)
5. (a)

PROBLEMS – ODD-NUMBERED ANSWERS

1. See Figure P–2.

▶ FIGURE P–2

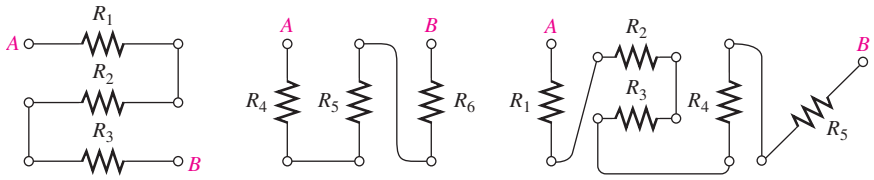

3. 170 kΩ

5. 138 Ω

7. **(a)** 7.9 kΩ **(b)** 33 Ω **(c)** 13.24 MΩ

The series circuit is disconnected from the source, and the ohmmeter is connected across the circuit terminals.

9. 1126 Ω

11. **(a)** 170 kΩ **(b)** 50 Ω **(c)** 12.4 kΩ **(d)** 1.97 kΩ

13. 0.1 A

15. **(a)** 625 μA **(b)** 4.26 μA. The ammeter is connected in series.

17. **(a)** 34.0 mA **(b)** 16 V **(c)** 0.543 W

19. See Figure P–3.

▶ FIGURE P–3

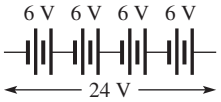

21. 26 V

23. **(a)** $V_2 = 6.8$ V

(b) $V_R = 8$ V, $V_{2R} = 16$ V, $V_{3R} = 24$ V, $V_{4R} = 32$ V

The voltmeter is connected across (in parallel with) each resistor for which the voltage is unknown.

www.EngineeringBooksPdf.com

25. **(a)** 3.84 V **(b)** 6.77 V

27. 3.80 V; 9.38 V

29. $V_{5.6\,k\Omega} = 10$ V; $V_{1\,k\Omega} = 1.79$ V; $V_{560\,\Omega} = 1$ V; $V_{10\,k\Omega} = 17.9$ V

31. 55 mW

33. Measure V_A and V_B individually with respect to ground; then $V_{R2} = V_A - V_B$.

35. 4.27 V

37. **(a)** R_4 open **(b)** R_4 and R_5 shorted

39. 780 Ω

41. $V_A = 10$ V; $V_B = 7.72$ V; $V_C = 6.68$ V;
$V_D = 1.81$ V; $V_E = 0.57$ V; $V_F = 0$ V

43. 500 Ω

45. **(a)** 19.1 mA **(b)** 45.8 V
(c) $R(1/8\,W) = 343\ \Omega$, $R(1/4\,W) = 686\ \Omega$,
$R(1/2\,W) = 1371\ \Omega$

47. See Figure P–4.

▶ **FIGURE P–4**

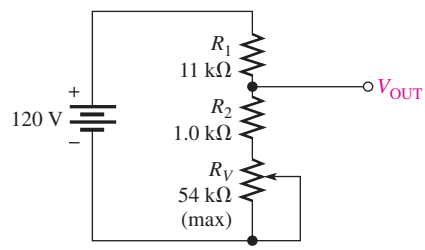

49. $R_1 + R_7 + R_8 + R_{10} = 4.23$ kΩ;
$R_2 + R_4 + R_6 + R_{11} = 23.6$ kΩ;
$R_3 + R_5 + R_9 + R_{12} = 19.9$ kΩ

51. *A*: 5.45 mA; *B*: 6.06 mA; *C*: 7.95 mA; *D*: 12 mA

53. *A*: $V_1 = 6.03$ V, $V_2 = 3.35$ V, $V_3 = 2.75$ V,
$V_4 = 1.88$ V, $V_5 = 4.0$ V;
B: $V_1 = 6.71$ V, $V_2 = 3.73$ V, $V_3 = 3.06$ V, $V_5 = 4.5$ V;
C: $V_1 = 8.1$ V, $V_2 = 4.5$ V, $V_5 = 5.4$ V;
D: $V_1 = 10.8$ V, $V_5 = 7.2$ V

55. Yes, R_3 and R_5 are shorted.

57. **(a)** R_{11} has burned open due to excessive power.
(b) Replace R_{11} (10 kΩ).
(c) 338 V

59. R_6 is shorted.

61. Lamp 4 is open.

63. The 82 Ω resistor is shorted.

www.EngineeringBooksPdf.com

TABLE OF STANDARD RESISTOR VALUES

Resistance Tolerance (±%)

0.1% 0.25% 0.5%	1%	2% 5%	10%	0.1% 0.25% 0.5%	1%	2% 5%	10%	0.1% 0.25% 0.5%	1%	2% 5%	10%	0.1% 0.25% 0.5%	1%	2% 5%	10%	0.1% 0.25% 0.5%	1%	2% 5%	10%	0.1% 0.25% 0.5%	1%	2% 5%	10%
10.0	10.0	10	10	14.7	14.7	—	—	21.5	21.5	—	—	31.6	31.6	—	—	46.4	46.4	—	—	68.1	68.1	68	68
10.1	—	—	—	14.9	—	—	—	21.8	—	—	—	32.0	—	—	—	47.0	—	47	47	69.0	—	—	—
10.2	10.2	—	—	15.0	15.0	15	15	22.1	22.1	22	22	32.4	32.4	—	—	47.5	47.5	—	—	69.8	69.8	—	—
10.4	—	—	—	15.2	—	—	—	22.3	—	—	—	32.8	—	—	—	48.1	—	—	—	70.6	—	—	—
10.5	10.5	—	—	15.4	15.4	—	—	22.6	22.6	—	—	33.2	33.2	33	33	48.7	48.7	—	—	71.5	71.5	—	—
10.6	—	—	—	15.6	—	—	—	22.9	—	—	—	33.6	—	—	—	49.3	—	—	—	72.3	—	—	—
10.7	10.7	—	—	15.8	15.8	—	—	23.2	23.2	—	—	34.0	34.0	—	—	49.9	49.9	—	—	73.2	73.2	—	—
10.9	—	—	—	16.0	—	16	—	23.4	—	—	—	34.4	—	—	—	50.5	—	—	—	74.1	—	—	—
11.0	11.0	11	—	16.2	16.2	—	—	23.7	23.7	—	—	34.8	34.8	—	—	51.1	51.1	51	—	75.0	75.0	75	—
11.1	—	—	—	16.4	—	—	—	24.0	—	24	—	35.2	—	—	—	51.7	—	—	—	75.9	—	—	—
11.3	11.3	—	—	16.5	16.5	—	—	24.3	24.3	—	—	35.7	35.7	—	—	52.3	52.3	—	—	76.8	76.8	—	—
11.4	—	—	—	16.7	—	—	—	24.6	—	—	—	36.1	—	36	—	53.0	—	—	—	77.7	—	—	—
11.5	11.5	—	—	16.9	16.9	—	—	24.9	24.9	—	—	36.5	36.5	—	—	53.6	53.6	—	—	78.7	78.7	—	—
11.7	—	—	—	17.2	—	—	—	25.2	—	—	—	37.0	—	—	—	54.2	—	—	—	79.6	—	—	—
11.8	11.8	—	—	17.4	17.4	—	—	25.5	25.5	—	—	37.4	37.4	—	—	54.9	54.9	—	—	80.6	80.6	—	—
12.0	—	12	12	17.6	—	—	—	25.8	—	—	—	37.9	—	—	—	56.2	—	—	—	81.6	—	—	—
12.1	12.1	—	—	17.8	17.8	—	—	26.1	26.1	—	—	38.3	38.3	—	—	56.6	56.6	56	56	82.5	82.5	82	82
12.3	—	—	—	18.0	—	18	18	26.4	—	—	—	38.8	—	—	—	56.9	—	—	—	83.5	—	—	—
12.4	12.4	—	—	18.2	18.2	—	—	26.7	26.7	—	—	39.2	39.2	39	39	57.6	57.6	—	—	84.5	84.5	—	—
12.6	—	—	—	18.4	—	—	—	27.1	—	27	27	39.7	—	—	—	58.3	—	—	—	85.6	—	—	—
12.7	12.7	—	—	18.7	18.7	—	—	27.4	27.4	—	—	40.2	40.2	—	—	59.0	59.0	—	—	86.6	86.6	—	—
12.9	—	—	—	18.9	—	—	—	27.7	—	—	—	40.7	—	—	—	59.7	—	—	—	87.6	—	—	—
13.0	13.0	13	—	19.1	19.1	—	—	28.0	28.0	—	—	41.2	41.2	—	—	60.4	60.4	—	—	88.7	88.7	—	—
13.2	—	—	—	19.3	—	—	—	28.4	—	—	—	41.7	—	—	—	61.2	—	—	—	89.8	—	—	—
13.3	13.3	—	—	19.6	19.6	—	—	28.7	28.7	—	—	42.2	42.2	—	—	61.9	61.9	62	—	90.9	90.9	91	—
13.5	—	—	—	19.8	—	—	—	29.1	—	—	—	42.7	—	—	—	62.6	—	—	—	92.0	—	—	—
13.7	13.7	—	—	20.0	20.0	20	—	29.4	29.4	—	—	43.2	43.2	43	—	63.4	63.4	—	—	93.1	93.1	—	—
13.8	—	—	—	20.3	—	—	—	29.8	—	—	—	43.7	—	—	—	64.2	—	—	—	94.2	—	—	—
14.0	14.0	—	—	20.5	20.5	—	—	30.1	30.1	30	—	44.2	44.2	—	—	64.9	64.9	—	—	95.3	95.3	—	—
14.2	—	—	—	20.8	—	—	—	30.5	—	—	—	44.8	—	—	—	65.7	—	—	—	96.5	—	—	—
14.3	14.3	—	—	21.0	21.0	—	—	30.9	30.9	—	—	45.3	45.3	—	—	66.5	66.5	—	—	97.6	97.6	—	—
14.5	—	—	—	21.3	—	—	—	31.2	—	—	—	45.9	—	—	—	67.3	—	—	—	98.8	—	—	—

NOTE: These values are generally available in multiples of 0.1, 1, 10, 100, 1 k, and 1 M.

PHOTO CREDITS FOR REOCCURRING IMAGES

CD Icon: Stockbyte/Getty Images; **Computer Chips:** Photodisc/Thinkstock; **Computer:** Jeff Maloney/Photodisc/Getty Images; **Fiber Optic:** discpicture/Shutterstock.

www.EngineeringBooksPdf.com

This page intentionally left blank

www.EngineeringBooksPdf.com

Parallel Circuits

From Chapter 5 of *Electronics Fundamentals: Circuits, Devices, and Applications*, Eighth Edition, Thomas L. Floyd, David M. Buchla.
Copyright © 2010 by Pearson Education, Inc. Published by Pearson Prentice Hall. All rights reserved.

www.EngineeringBooksPdf.com

Parallel Circuits

CHAPTER OUTLINE

1 Resistors in Parallel
2 Total Parallel Resistance
3 Voltage in a Parallel Circuit
4 Application of Ohm's Law
5 Kirchhoff's Current Law
6 Current Dividers
7 Power in Parallel Circuits
8 Troubleshooting
Application Assignment: Putting Your Knowledge to Work

CHAPTER OBJECTIVES

- Identify a parallel resistive circuit
- Determine total parallel resistance
- Determine the voltage across each parallel branch
- Apply Ohm's law in a parallel circuit
- Apply Kirchhoff's current law
- Use a parallel circuit as a current divider
- Determine power in a parallel circuit
- Troubleshoot parallel circuits

KEY TERMS

- Parallel
- Branch
- Kirchhoff's current law
- Node
- Current divider

APPLICATION ASSIGNMENT PREVIEW

In this application, a panel-mounted power supply will be modified by adding a milliammeter to indicate current to a load. Expansion of the meter for multiple current ranges using parallel (shunt) resistors will be demonstrated. The problem with very low-value resistors when a switch is used to select the current ranges will be introduced and the effect of switch contact resistance will be demonstrated. A way of eliminating the contact resistance problem will be presented. Finally, the ammeter circuit will be installed in the power supply. The knowledge of parallel circuits and of basic ammeters that you will acquire in this chapter plus your understanding of Ohm's law and current dividers will be put to good use. After studying this chapter, you should be able to complete the application assignment.

VISIT THE COMPANION WEBSITE

Study aids for this chapter are available at http://www.pearsonhighered.com/floyd/

INTRODUCTION

In this chapter, you will see how Ohm's law is used in parallel circuits; and you will learn Kirchhoff's current law. Also, several applications of parallel circuits, including automotive lighting, residential wiring, control circuits, and the internal wiring of analog ammeters are presented. You will learn how to determine total parallel resistance and how to troubleshoot for open resistors.

When resistors are connected in parallel and a voltage is applied across the parallel circuit, each resistor provides a separate path for current. The total resistance of a parallel circuit is reduced as more resistors are connected in parallel. The voltage across each of the parallel resistors is equal to the voltage applied across the entire parallel circuit.

Streeter Photography/Alamy

www.EngineeringBooksPdf.com

1 RESISTORS IN PARALLEL

When two or more resistors are individually connected between the same two points, they are in **parallel** with each other. A parallel circuit provides more than one path for current.

After completing this section, you should be able to

- **Identify a parallel resistive circuit**
  - Translate a physical arrangement of parallel resistors into a schematic

Each parallel path in a circuit is called a **branch**. Two resistors connected in parallel are shown in Figure 1(a). As shown in part (b), the current out of the source (I_T) divides when it gets to point B. I_1 goes through R_1 and I_2 goes through R_2. The two currents come back together at point A. If additional resistors are connected in parallel with the first two, more current paths are provided, as shown in Figure 1(c). All points along the top shown in blue are electrically the same as point A, and all the points along the bottom shown in green are electrically the same as point B.

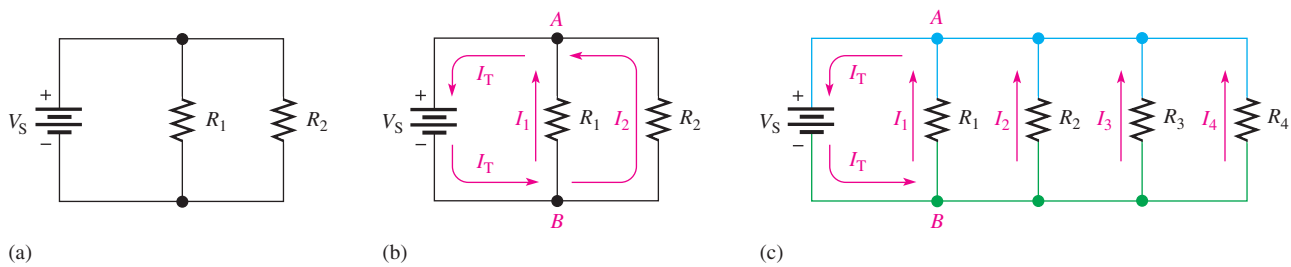

▲ FIGURE 1

Resistors in parallel.

In Figure 1, it is obvious that the resistors are connected in parallel. However, in actual circuit diagrams, the parallel relationship often is not as clear. It is important that you learn to recognize parallel circuits regardless of how they may be drawn.

A rule for identifying parallel circuits is as follows:

If there is more than one current path (branch) between two points, and if the voltage between those two points also appears across each of the branches, then there is a parallel circuit between those two points.

Figure 2 shows parallel resistors drawn in different ways between two points labeled A and B. Notice that in each case, the current has two paths going from A to B, and the

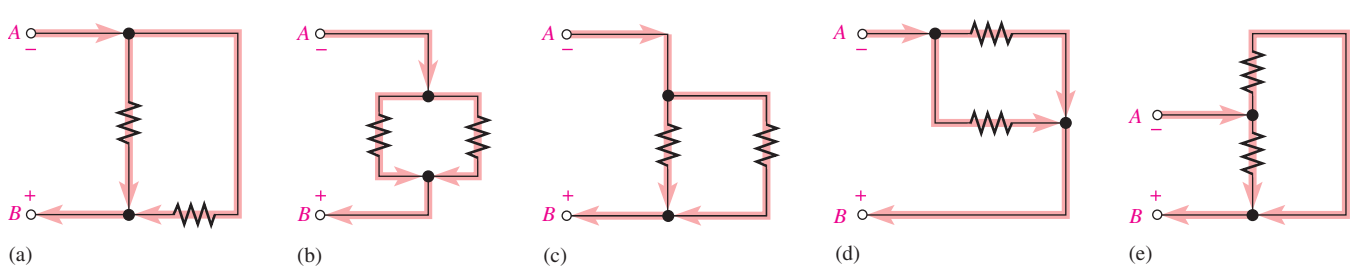

▲ FIGURE 2

Examples of circuits with two parallel paths.

This icon indicates selected websites for further information on topics in this section. See the Companion Website provided with this text.

www.EngineeringBooksPdf.com

voltage across each branch is the same. Although these figures show only two parallel paths, there can be any number of resistors in parallel.

EXAMPLE 1

Five resistors are positioned on a protoboard as shown in Figure 3. Show the wiring required to connect all the resistors in parallel between A and B. Draw a schematic and label each of the resistors with its value.

▶ FIGURE 3

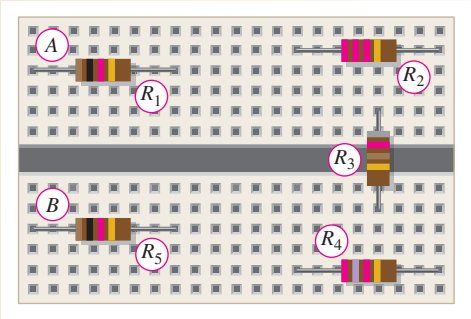

Solution Wires are connected as shown in the assembly wiring diagram of Figure 4(a). The schematic is shown in Figure 4(b) with resistance values from the color bands. Again, note that the schematic does not necessarily have to show the actual physical arrangement of the resistors. The schematic shows how components are connected electrically.

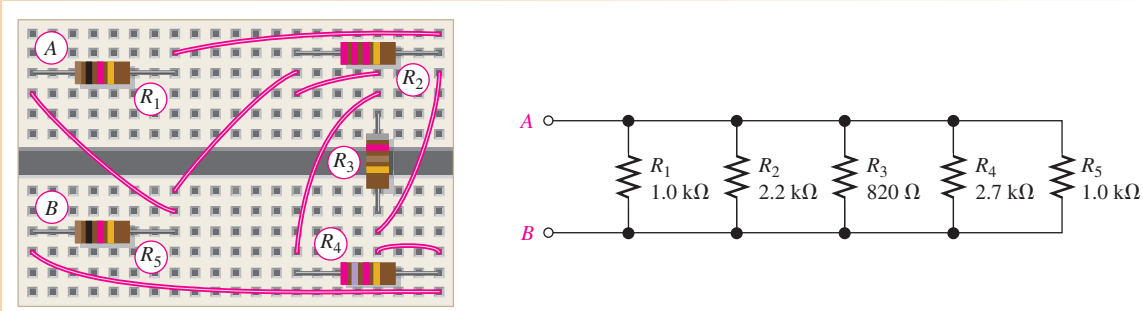

(a) Assembly wiring diagram (b) Schematic

▲ FIGURE 4

*Related Problem** Would the circuit have to be rewired if R_2 is removed?

*Answers are at the end of the chapter.

EXAMPLE 2

Determine the parallel groupings in Figure 5 and the value of each resistor.

Solution Resistors R_1 through R_4 and R_{11} and R_{12} are all in parallel. This parallel combination is connected to pins 1 and 4. Each resistor in this group is 56 kΩ.

www.EngineeringBooksPdf.com

▶ FIGURE 5

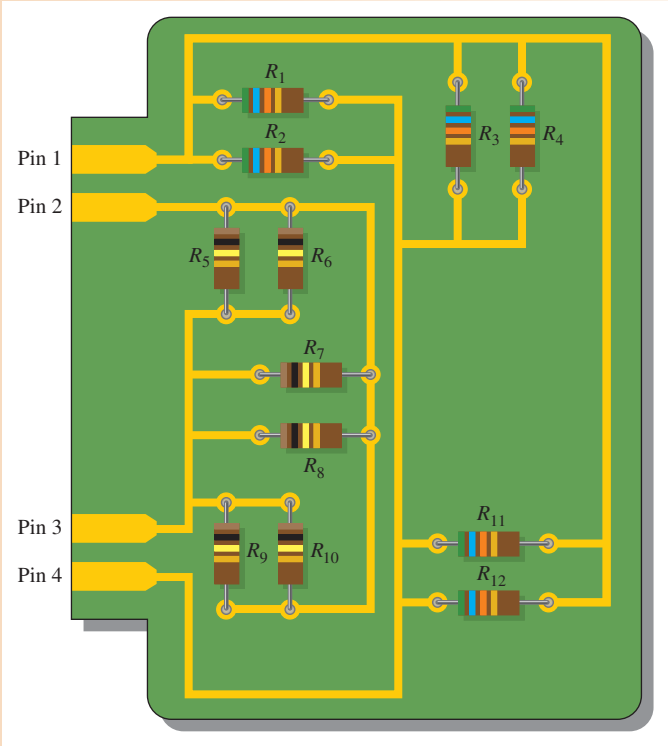

Resistors R_5 through R_{10} are all in parallel. This combination is connected to pins 2 and 3. Each resistor in this group is 100 kΩ.

Related Problem How would you connect all the resistors on the PC board in parallel?

SECTION 1 CHECKUP

Answers are at the end of the chapter.

1. How are the resistors connected in a parallel circuit?
2. How do you identify a parallel circuit?
3. Complete the schematics for the circuits in each part of Figure 6 by connecting the resistors in parallel between points *A* and *B*.
4. Connect each group of parallel resistors in Figure 6 in parallel with each other.

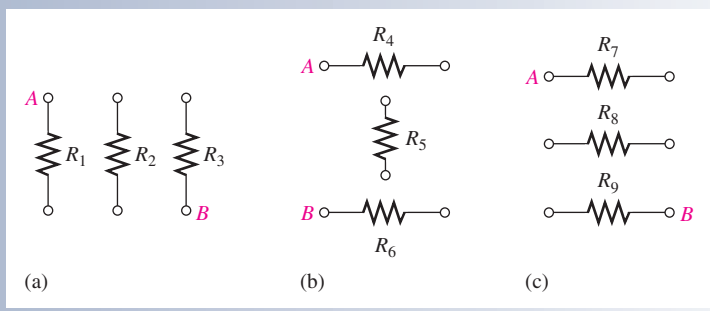

▲ FIGURE 6

www.EngineeringBooksPdf.com

2 TOTAL PARALLEL RESISTANCE

When resistors are connected in parallel, the total resistance of the circuit decreases. The total resistance of a parallel circuit is always less than the value of the smallest resistor. For example, if a 10 Ω resistor and a 100 Ω resistor are connected in parallel, the total resistance is less than 10 Ω.

After completing this section, you should be able to

- **Determine total parallel resistance**
  - Explain why resistance decreases as resistors are connected in parallel
  - Apply the parallel-resistance formula
  - Describe two applications of a parallel circuit

When resistors are connected in parallel, the current has more than one path. The number of current paths is equal to the number of parallel branches.

In Figure 7(a), there is only one current path because it is a series circuit. There is a certain amount of current, I_1, through R_1. If resistor R_2 is connected in parallel with R_1, as shown in Figure 7(b), there is an additional amount of current, I_2, through R_2. The total current coming from the source has increased with the addition of the parallel branch. Assuming that the source voltage is constant, an increase in the total current from the source means that the total resistance has decreased, in accordance with Ohm's law. Additional resistors connected in parallel will further reduce the resistance and increase the total current.

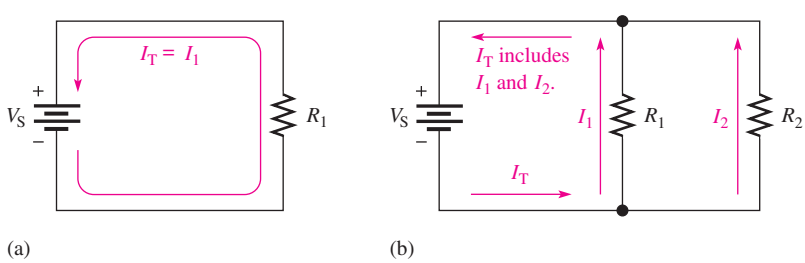

▶ **FIGURE 7**

Connecting resistors in parallel reduces total resistance and increases total current.

Formula for Total Parallel Resistance, R_T

The circuit in Figure 8 shows a general case of n resistors in parallel (n can be any integer greater than 1). As resistors are added, there are more paths for current; hence, there is increased conductance. Recall that conductance (G) is the reciprocal of resistance, ($1/R$). It has the unit of siemens (S).

With parallel resistors, it is simple to think in terms of the conductive paths; each resistor adds to the total conductance as given by the following equation:

$$G_T = G_1 + G_2 + G_3 + \cdots + G_n$$

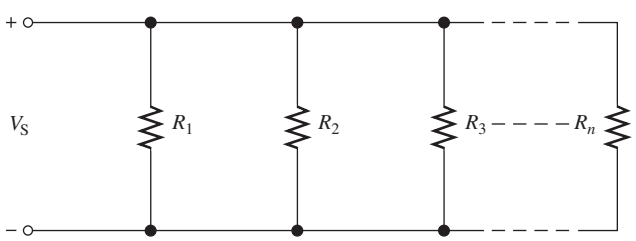

▶ **FIGURE 8**

Circuit with n resistors in parallel.

www.EngineeringBooksPdf.com

Substituting $1/R$ for G,

$$\frac{1}{R_T} = \frac{1}{R_1} + \frac{1}{R_2} + \frac{1}{R_3} + \cdots + \frac{1}{R_n}$$

Solve for R_T by taking the reciprocal of (that is, by inverting) both sides of the equation.

$$\boldsymbol{R_T = \frac{1}{\frac{1}{R_1} + \frac{1}{R_2} + \frac{1}{R_3} + \cdots + \frac{1}{R_n}}} \qquad \textbf{Equation 1}$$

Equation 1 shows that to find the total parallel resistance, add all the $1/R$ (or conductance, G) terms and then take the reciprocal of the sum.

$$R_T = \frac{1}{G_T}$$

EXAMPLE 3

Calculate the total parallel resistance between points A and B of the circuit in Figure 9.

▶ **FIGURE 9**

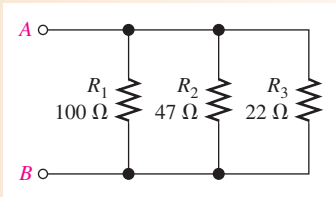

Solution Use Equation 1 to calculate the total resistance when you know the individual resistances. First, find the conductance, which is the reciprocal of the resistance, of each of the three resistors.

$$G_1 = \frac{1}{R_1} = \frac{1}{100\ \Omega} = 10\ \text{mS}$$

$$G_2 = \frac{1}{R_2} = \frac{1}{47\ \Omega} = 21.3\ \text{mS}$$

$$G_3 = \frac{1}{R_3} = \frac{1}{22\ \Omega} = 45.5\ \text{mS}$$

Next, calculate R_T by adding G_1, G_2, and G_3 and taking the reciprocal of the sum.

$$R_T = \frac{1}{\frac{1}{R_1} + \frac{1}{R_2} + \frac{1}{R_3}} = \frac{1}{G_1 + G_2 + G_3}$$

$$= \frac{1}{10\ \text{mS} + 21.3\ \text{mS} + 45.5\ \text{mS}} = \frac{1}{76.8\ \text{mS}} = \mathbf{13.0\ \Omega}$$

For a rough accuracy check, notice that the value of R_T (13.0 Ω) is smaller than the smallest value in parallel, which is R_3 (22 Ω), as it should be.

Related Problem If a 33 Ω resistor is connected in parallel in Figure 9, what is R_T?

Calculator Tip The parallel-resistance formula is easily solved on a calculator using Equation 1. The general procedure is to enter the value of R_1 and then take its reciprocal by pressing the x^{-1} key (x^{-1} is a secondary function on some calculators). The notation x^{-1}

www.EngineeringBooksPdf.com

means $1/x$. Some calculators use $1/x$ instead of x^{-1}. Next press the + key; then enter the value of R_2 and take its reciprocal. Repeat this procedure until all of the resistor values have been entered and the reciprocal of each has been added. The final step is to press the x^{-1} key to convert $1/R_T$ to R_T. The total parallel resistance is now on the display. The display format may vary, depending on the particular calculator.

EXAMPLE 4

Show the steps required for a typical calculator solution of Example 3.

Solution

1. Enter 100. Display shows 100.
2. Press the x^{-1} key (or the 2nd then x^{-1} keys).
3. Press the + key.
4. Enter 47.
5. Press the x^{-1} key.
6. Press the + key.
7. Enter 22.
8. Press the x^{-1} key.
9. Press the ENTER key. Display shows $76.7311411992E^{-3}$.
10. Press the x^{-1} and ENTER keys. Display shows 13.0325182758E0.

The number displayed in Step 10 is the total resistance, which is rounded to 13.0 Ω.

Related Problem Show the additional calculator steps for R_T when a 33 Ω resistor is placed in parallel in the circuit of Example 3.

The Case of Two Resistors in Parallel Equation 1 is a general formula for finding the total resistance of any number of resistors in parallel. It is often useful to consider only two resistors in parallel because this situation occurs commonly in practice.

Derived from Equation 1, the formula for two resistors in parallel is

Equation 2

$$R_T = \frac{R_1 R_2}{R_1 + R_2}$$

Equation 2 states

The total resistance for two resistors in parallel is equal to the product of the two resistors divided by the sum of the two resistors.

This equation is sometimes referred to as the "product over the sum" formula.

EXAMPLE 5

Calculate the total resistance connected to the voltage source of the circuit in Figure 10.

▶ FIGURE 10

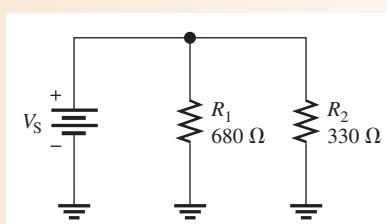

www.EngineeringBooksPdf.com

Solution Use Equation 2.

$$R_T = \frac{R_1R_2}{R_1 + R_2} = \frac{(680\ \Omega)(330\ \Omega)}{680\ \Omega + 330\ \Omega} = \frac{224{,}000\ \Omega^2}{1{,}010\ \Omega} = \mathbf{222\ \Omega}$$

Related Problem Find R_T if a 220 Ω resistor replaces R_1 in Figure 10.

The Case of Equal-Value Resistors in Parallel Another special case of parallel circuits is the parallel connection of several resistors having the same value. The following is a shortcut method of calculating R_T when this case occurs:

$$\boldsymbol{R_T = \frac{R}{n}} \qquad \text{Equation 3}$$

Equation 3 says that when any number of resistors (n), all having the same resistance (R), are connected in parallel, R_T is equal to the resistance divided by the number of resistors in parallel.

EXAMPLE 6 Find the total resistance between points A and B in Figure 11.

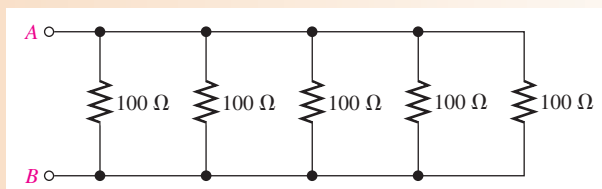

▲ FIGURE 11

Solution There are five 100 Ω resistors in parallel. Use Equation 3.

$$R_T = \frac{R}{n} = \frac{100\ \Omega}{5} = \mathbf{20\ \Omega}$$

Related Problem Find R_T for three 100 kΩ resistors in parallel.

Notation for Parallel Resistors Sometimes, for convenience, parallel resistors are designated by two parallel vertical marks. For example, R_1 in parallel with R_2 can be written as $R_1 \parallel R_2$. Also, when several resistors are in parallel with each other, this notation can be used. For example,

$$R_1 \parallel R_2 \parallel R_3 \parallel R_4 \parallel R_5$$

indicates that R_1 through R_5 are all in parallel.

This notation is also used with resistance values. For example,

$$10\ \text{k}\Omega \parallel 5\ \text{k}\Omega$$

means that a 10 kΩ resistor is in parallel with a 5 kΩ resistor.

Applications of Parallel Circuits

Automotive One advantage of a parallel circuit over a series circuit is that when one branch opens, the other branches are not affected. For example, Figure 12 shows a

www.EngineeringBooksPdf.com

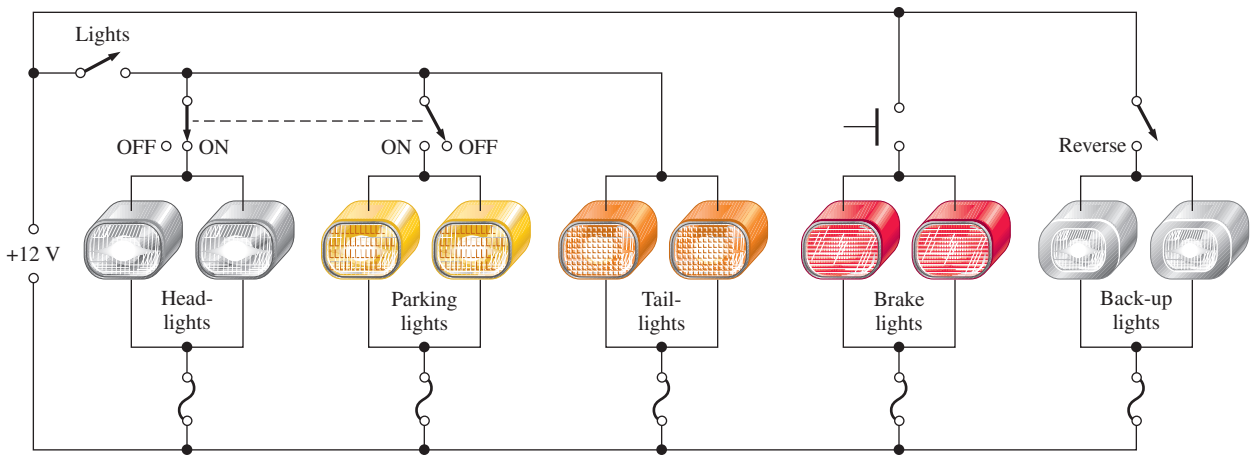

▲ FIGURE 12

Simplified diagram of the exterior light system of an automobile.

simplified diagram of an automobile lighting system. When one headlight on your car goes out, it does not cause the other lights to go out because they are all in parallel.

Notice that the brake lights are switched on independently of the headlights and taillights. They come on only when the driver closes the brake light switch by depressing the brake pedal. When the lights switch is closed, both headlights and both taillights are on. When the headlights are on, the parking lights are off and vice versa, as indicated by the dashed line connecting the switches. If any one of the lights burns out (opens), there is still current in each of the other lights. The back-up lights are switched on when the reverse gear is engaged.

Another automotive application of parallel resistances is the rear window defroster. As you know, power is dissipated in resistance in the form of heat. The defroster consists of a group of parallel resistance wires that warm the glass when power is applied. A typical defroster can dissipate over 100 W across the window. Although resistance heating is not as efficient as other forms of heat, in applications like this it is simple and cost effective.

Residential Another common use of parallel circuits is in residential electrical systems. All the lights and appliances in a home are wired in parallel. Figure 13 shows a typical room wiring arrangement with two switch-controlled lights and three wall outlets in parallel.

▶ FIGURE 13

Example of a parallel circuit in residential wiring.

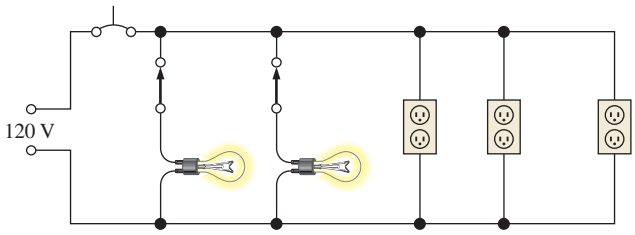

Control Circuits Many control systems use parallel circuits or equivalent circuits for control and monitoring an industrial process such as a production line. Most complex control applications are implemented on a dedicated computer called a **programmable logic controller (PLC)**. A PLC shows an equivalent parallel circuit, which is displayed on a computer screen. Internally, the circuit may exist only as a computer code, written in a computer programming language. However, the displayed circuit is one that could in principle be constructed with hardware. These circuits can be drawn to resemble a ladder—with rungs representing the load (and a source) and the rails representing the two conductors that are connected to the voltage source. (For example, notice that Figure 13 resembles a ladder on its side, with the lights and wall outlets as loads.) Parallel control circuits use **ladder diagrams** but add additional control elements (switches, relays, timers,

www.EngineeringBooksPdf.com

and more). The result of adding the control elements creates a logical diagram, which is referred to as **ladder logic**. Ladder logic is easy to understand, so it is popular for showing control logic in industrial environments, such as factories or food processors. Entire books are written about ladder logic, but a ladder diagram (parallel circuit) is at the core of all ladder logic. The most important aspect is that ladder logic shows the basic functionality of the circuit in an easy-to-read format.

In addition to ladder diagrams used in industrial control problems, many auto repair manuals use these diagrams for showing circuits for troubleshooting purposes. Ladder diagrams are logical, so a technician can organize a test procedure by reading the diagram.

SECTION 2 CHECKUP

1. Does the total resistance increase or decrease as more resistors are connected in parallel?
2. The total parallel resistance is always less than what value?
3. Determine R_T (between pin 1 and pin 4) for the circuit in Figure 14. Note that pins 1 and 2 are connected and pins 3 and 4 are connected.

▶ FIGURE 14

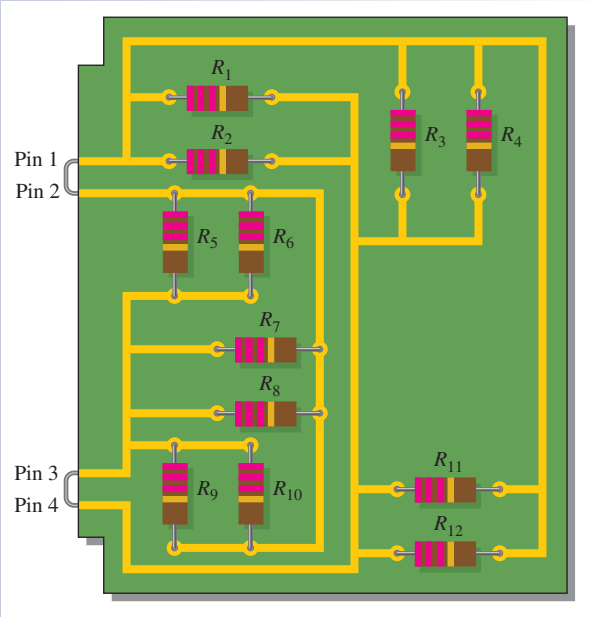

3 VOLTAGE IN A PARALLEL CIRCUIT

The voltage across any given branch of a parallel circuit is equal to the voltage across each of the other branches in parallel. As you know, each current path in a parallel circuit is called a *branch.*

After completing this section, you should be able to

- **Determine the voltage across each branch in a parallel circuit**
  - Explain why the voltage is the same across all parallel resistors

To illustrate voltage in a parallel circuit, let's examine Figure 15(a). Points *A*, *B*, *C*, and *D* along the left side of the parallel circuit are electrically the same point because the voltage is the same along this line. You can think of all of these points as being connected

www.EngineeringBooksPdf.com

▶ FIGURE 15

Voltage across parallel branches is the same.

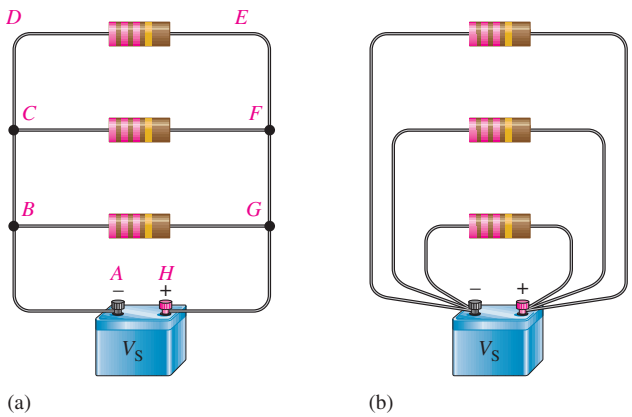

by a single wire to the negative terminal of the battery. The points *E*, *F*, *G*, and *H* along the right side of the circuit are all at a voltage equal to that of the positive terminal of the source. Thus, voltage across each parallel resistor is the same, and each is equal to the source voltage. Notice that the parallel circuit in Figure 15 resembles a ladder as described earlier.

Figure 15(b) is the same circuit as in part (a), drawn in a slightly different way. Here the left side of each resistor is connected to a single point, which is the negative battery terminal. The right side of each resistor is connected to a single point, which is the positive battery terminal. The resistors are still all in parallel across the source.

In Figure 16, a 12 V battery is connected across three parallel resistors. When the voltage is measured across the battery and then across each of the resistors, the readings are the same. As you can see, the same voltage appears across each branch in a parallel circuit.

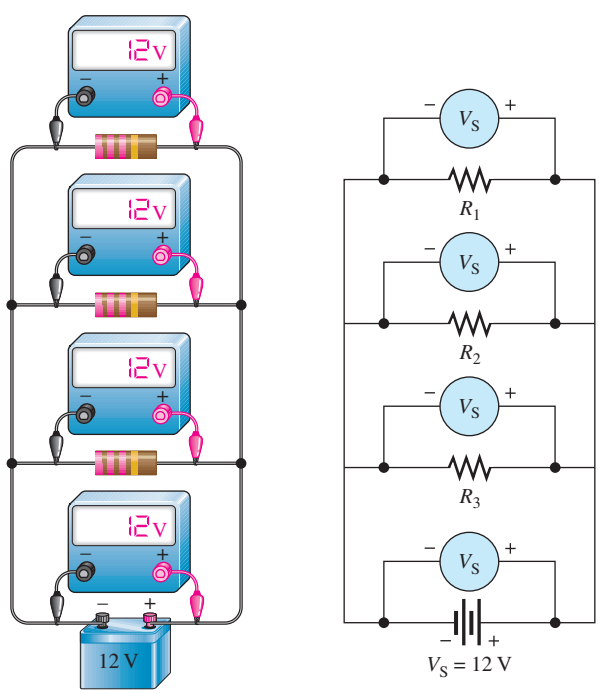

▲ FIGURE 16

The same voltage appears across each resistor in parallel.

www.EngineeringBooksPdf.com

EXAMPLE 7

Determine the voltage across each resistor in Figure 17.

▶ FIGURE 17

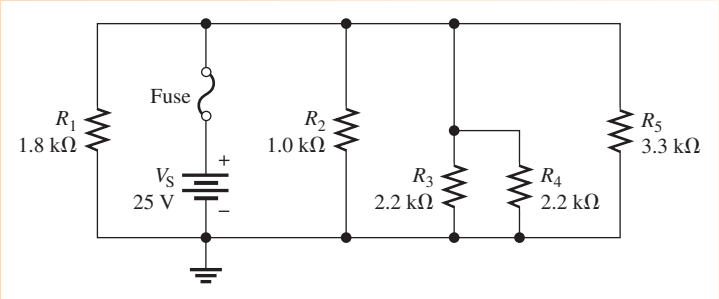

Solution The five resistors are in parallel; so the voltage across each one is equal to the source voltage, V_S. There is no voltage across the fuse.

$$V_1 = V_2 = V_3 = V_4 = V_5 = V_S = \mathbf{25\ V}$$

Related Problem If R_4 is removed from the circuit, what is the voltage across R_3?

Open Multisim file E05-07; files are found at www.pearsonhighered.com/floyd/. Verify that each resistor voltage equals the source voltage. Repeat for the related problem.

SECTION 3 CHECKUP

1. A 100 Ω and a 220 Ω resistor are connected in parallel with a 5 V source. What is the voltage across each of the resistors?
2. A voltmeter connected across R_1 in Figure 18 measures 118 V. If you move the meter and connect it across R_2, how much voltage will it indicate? What is the source voltage?
3. In Figure 19, how much voltage does voltmeter 1 indicate? Voltmeter 2?
4. How are voltages across each branch of a parallel circuit related?

▶ FIGURE 18

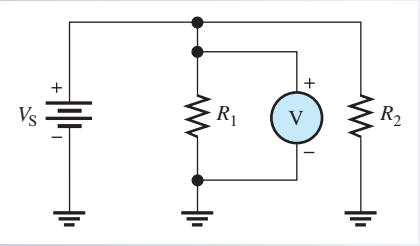

▶ FIGURE 19

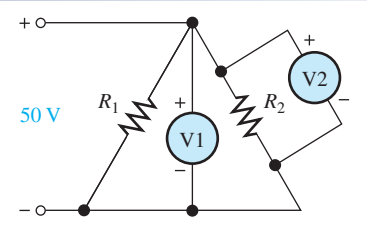

www.EngineeringBooksPdf.com

4 APPLICATION OF OHM'S LAW

Ohm's law can be applied to parallel circuit analysis.

After completing this section, you should be able to

- **Apply Ohm's law in a parallel circuit**
  - Find the total current in a parallel circuit
  - Find the branch currents, voltage, and resistance in a parallel circuit

The following examples illustrate how to apply Ohm's law in parallel circuits.

EXAMPLE 8

Find the total current from the battery in Figure 20.

▶ FIGURE 20

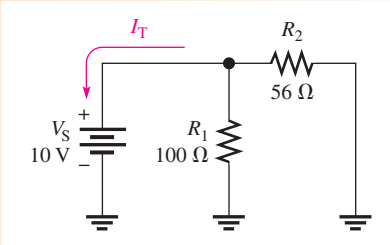

Solution The battery "sees" a total parallel resistance that determines the amount of current. First, calculate R_T.

$$R_T = \frac{R_1R_2}{R_1 + R_2} = \frac{(100\ \Omega)(56\ \Omega)}{100\ \Omega + 56\ \Omega} = \frac{5600\ \Omega^2}{156\ \Omega} = 35.9\ \Omega$$

The battery voltage is 10 V. Use Ohm's law to find I_T.

$$I_T = \frac{V_S}{R_T} = \frac{10\ \text{V}}{35.9\ \Omega} = \mathbf{279\ mA}$$

Related Problem Find the currents through R_1 and R_2 in Figure 20. Show that the sum of the currents through R_1 and R_2 equals the total current.

Open Multisim file E05-08. Using the multimeter, verify the calculated values of total current and the branch currents.

EXAMPLE 9

Determine the current through each resistor in the parallel circuit of Figure 21.

▶ FIGURE 21

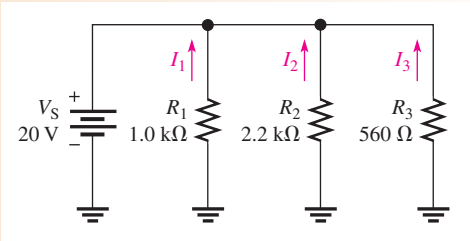

www.EngineeringBooksPdf.com

Solution The voltage across each resistor (branch) is equal to the source voltage. That is, the voltage across R_1 is 20 V, the voltage across R_2 is 20 V, and the voltage across R_3 is 20 V. Determine the current through each resistor as follows:

$$I_1 = \frac{V_S}{R_1} = \frac{20\text{ V}}{1.0\text{ k}\Omega} = \mathbf{20.0\text{ mA}}$$

$$I_2 = \frac{V_S}{R_2} = \frac{20\text{ V}}{2.2\text{ k}\Omega} = \mathbf{9.09\text{ mA}}$$

$$I_3 = \frac{V_S}{R_3} = \frac{20\text{ V}}{560\ \Omega} = \mathbf{35.7\text{ mA}}$$

Related Problem If an additional resistor of 910 Ω is connected in parallel to the circuit in Figure 21, determine all the branch circuits.

Open Multisim file E05-09. Measure the current through each resistor. Connect a 910 Ω resistor in parallel with the other resistors and measure the branch currents. How much does the total current from the source change when the new resistor is added?

EXAMPLE 10

Find the voltage across the parallel circuit shown in Figure 22.

▶ **FIGURE 22**

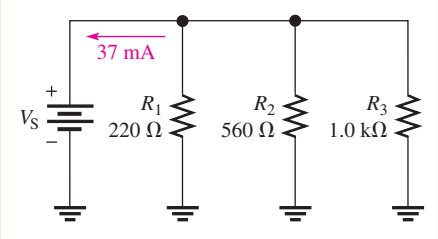

Solution The total current into the parallel circuit is 37 mA. If you know the total resistance, then you can apply Ohm's law to get the voltage. The total resistance is

$$R_T = \frac{1}{\frac{1}{R_1} + \frac{1}{R_2} + \frac{1}{R_3}} = \frac{1}{\frac{1}{220\ \Omega} + \frac{1}{560\ \Omega} + \frac{1}{1.0\text{ k}\Omega}}$$

$$= \frac{1}{4.55\text{ mS} + 1.79\text{ mS} + 1\text{ mS}} = \frac{1}{7.34\text{ mS}} = 136\ \Omega$$

Therefore, the source voltage and the voltage across each branch is

$$V_S = I_T R_T = (37\text{ mA})(136\ \Omega) = \mathbf{5.05\text{ V}}$$

Related Problem Find the total current if R_3 opens in Figure 22. Assume V_S remains the same.

EXAMPLE 11

Sometimes a direct measurement of resistance is not practical. For example, tungsten filament bulbs get hot after turning them on, causing the resistance to increase. An ohmmeter can only measure the cold resistance. Assume you want to know the equivalent

www.EngineeringBooksPdf.com

hot resistance of the two headlight bulbs and the two taillight bulbs in a car. The two headlights normally operate on 12.6 V and draw 2.8 A each when they are on.

(a) What is the total equivalent hot resistance when the two headlights are on?

(b) Assume the total current for headlights and taillights is 8.0 A when all four bulbs are on. What is the equivalent resistance of each taillight?

Solution **(a)** Use Ohm's law to calculate the equivalent resistance of one headlight.

$$R_{HEAD} = \frac{V}{I} = \frac{12.6\text{ V}}{2.8\text{ A}} = 4.5\ \Omega$$

Because the two bulbs are in parallel and have equal resistances,

$$R_{T(HEAD)} = \frac{R_{HEAD}}{n} = \frac{4.5\ \Omega}{2} = \mathbf{2.25\ \Omega}$$

(b) Use Ohm's law to find the total resistance with two taillights and two headlights on.

$$R_{T(HEAD+TAIL)} = \frac{12.6\text{ V}}{8.0\text{ A}} = 1.58\ \Omega$$

Apply the formula for parallel resistors to find the resistance of the two taillights together.

$$\frac{1}{R_{T(HEAD+TAIL)}} = \frac{1}{R_{T(HEAD)}} + \frac{1}{R_{T(TAIL)}}$$

$$\frac{1}{R_{T(TAIL)}} = \frac{1}{R_{T(HEAD+TAIL)}} - \frac{1}{R_{T(HEAD)}} = \frac{1}{1.58\ \Omega} - \frac{1}{2.25\ \Omega}$$

$$R_{T(TAIL)} = 5.25\ \Omega$$

The two taillights are in parallel, so each light has a resistance of

$$R_{TAIL} = nR_{T(TAIL)} = 2(5.25\ \Omega) = \mathbf{10.5\ \Omega}$$

Related Problem What is the total equivalent resistance of two headlights that each draw 3.15 A?

SECTION 4 CHECKUP

1. A 12 V battery is connected across three 680 Ω resistors that are in parallel. What is the total current from the battery?
2. How much voltage is required to produce 20 mA through the circuit of Figure 23?
3. How much current is there through each resistor of Figure 23?
4. There are four equal-value resistors in parallel with a 12 V source and 6 mA of current from the source. What is the value of each resistor?
5. A 1.0 kΩ and a 2.2 kΩ resistor are connected in parallel. There is a total of 100 mA through the parallel combination. How much voltage is dropped across the resistors?

▶ FIGURE 23

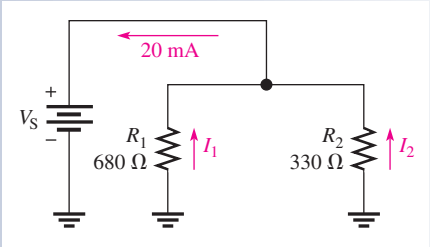

www.EngineeringBooksPdf.com

5 KIRCHHOFF'S CURRENT LAW

Kirchhoff's voltage law deals with voltages in a single closed path. Kirchhoff's current law applies to currents in multiple paths.

After completing this section, you should be able to

- **Apply Kirchhoff's current law**
  - State Kirchhoff's current law
  - Define *node*
  - Determine the total current by adding the branch currents
  - Determine an unknown branch current

Kirchhoff's current law, often abbreviated KCL, can be stated as follows:

The sum of the currents into a node (total current in) is equal to the sum of the currents out of that node (total current out).

A **node** is any point or junction in a circuit where two or more components are connected. In a parallel circuit, a node is a point where the parallel branches come together. For example, in the circuit of Figure 24, there are two nodes as indicated, node *A* and node *B*. Let's start at the negative terminal of the source and follow the current. The total current I_T from the source is *into* node *A*. At this point, the current splits up among the three branches as indicated. Each of the three branch currents (I_1, I_2 and I_3) is *out of* node *A*. Kirchhoff's current law says that the total current into node *A* is equal to the total current out of node *A*; that is,

$$I_T = I_1 + I_2 + I_3$$

Now, following the currents in Figure 24 through the three branches, you see that they come back together at node *B*. Currents I_1, I_2, and I_3 are into node *B*, and I_T is out of node *B*. Kirchhoff's current law formula at node *B* is therefore the same as at node *A*.

$$I_1 + I_2 + I_3 = I_T$$

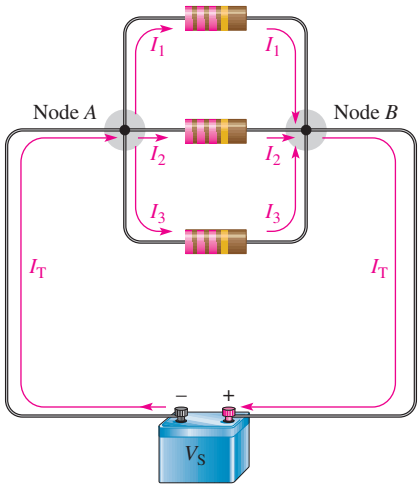

▲ FIGURE 24

Kirchhoff's current law: The current into a node equals the current out of that node.

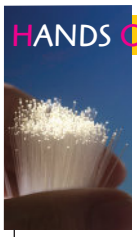

HANDS ON TIP

Kirchhoff's current law can be applied to anything that acts as a load for an electrical system. For example, the power connections to a circuit board will have the same current supplied to the board as leaving the board. Likewise, a building has the same current on the incoming "hot" line as the neutral. The supply and return currents are always the same, but a fault in a system can cause return current to follow a different path other than the neutral line (a condition known as a "ground fault").

www.EngineeringBooksPdf.com

By Kirchhoff's current law, the sum of the currents into a node must equal the sum of the currents out of that node. Figure 25 illustrates the general case of Kirchhoff's current law and can be written as a mathematical relationship.

Equation 4

$$I_{IN(1)} + I_{IN(2)} + I_{IN(3)} + \cdots + I_{IN(n)} = I_{OUT(1)} + I_{OUT(2)} + I_{OUT(3)} + \cdots + I_{OUT(m)}$$

Moving the terms on the right side to the left side and changing the sign results in the following equivalent equation:

$$I_{IN(1)} + I_{IN(2)} + I_{IN(3)} + \cdots + I_{IN(n)} - I_{OUT(1)} - I_{OUT(2)} - I_{OUT(3)} - \cdots - I_{OUT(m)} = 0$$

This equation shows that all current into and out of the junction sums to zero. It is equivalent to "balancing the books" by accounting for all current into and out of a node.

▶ **FIGURE 25**

Generalized circuit node illustrates Kirchhoff's current law.

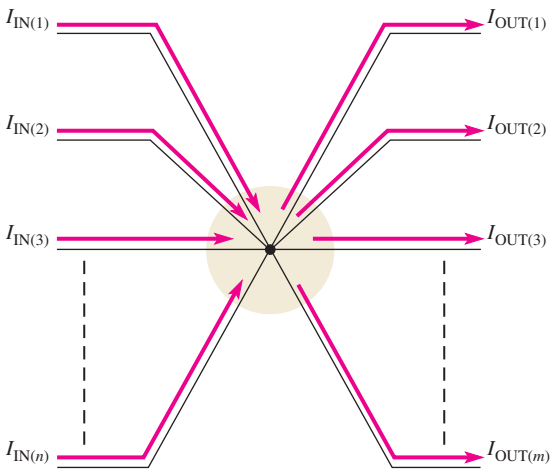

$$I_{IN(1)} + I_{IN(2)} + I_{IN(3)} + \cdots + I_{IN(n)} = I_{OUT(1)} + I_{OUT(2)} + I_{OUT(3)} + \cdots I_{OUT(m)}$$

An equivalent way of writing Kirchhoff's current law can be expressed using the mathematical summation shorthand as in Kirchhoff's voltage law. To express Kirchhoff's current law with this method, we will assign all currents with a sequential subscript (1, 2, 3, and so on) no matter if the current is into or out of the node. Currents into the node are assigned a positive sign and currents leaving the node are assigned a negative sign. Using this notation, Kirchhoff's current law can be stated this way:

$$\sum_{i=1}^{n} I_i = 0$$

This equation uses the mathematical symbol for summation, Σ, which means to add the terms from $i = 1$ to $i = n$, taking into account their signs, and set them equal to zero. It can be expressed as a statement as

The algebraic sum of all of the currents entering and leaving a node is equal to zero.

You can verify Kirchhoff's current law by connecting a circuit and measuring each branch current and the total current from the source, as illustrated in Figure 26. *When the branch currents are added together, their sum will equal the total current.* This rule applies for any number of branches.

www.EngineeringBooksPdf.com

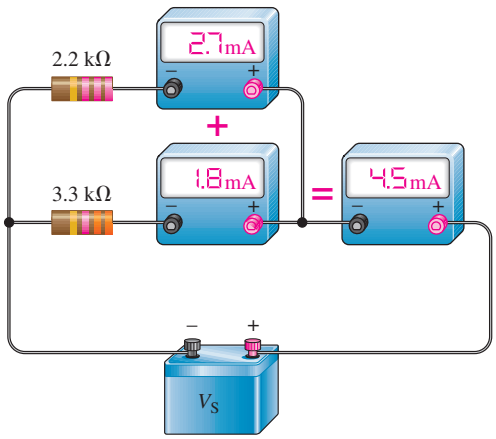

◀ FIGURE 26

An illustration of Kirchhoff's current law.

EXAMPLE 12

In Example 11, you found the equivalent resistance of the headlights and taillights of a car. Using Kirchhoff's current law, find the current in each of the two taillights, given that the total current is 8.0 A and together the headlights draw 5.6 A. Assume the lights are the only load on the battery.

Solution The current from the battery equals the current to the lights.

$$I_{BAT} = I_{T(HEAD)} + I_{T(TAIL)}$$

The total current from the battery is +8.0 A and the currents to the bulbs are negative. Rearranging,

$$I_{T(TAIL)} = I_{BAT} - I_{T(HEAD)} = 8.0\text{ A} - 5.6\text{ A} = 2.4\text{ A}$$

Because the taillights are identical, each draws 2.4 A/2 = **1.2 A**.

Related Problem Using the resistance of the taillights from Example 11, show that Ohm's law gives the same result.

EXAMPLE 13

You know the branch currents in the circuit of Figure 27. Determine the total current entering node *A* and the total current leaving node *B*.

▶ FIGURE 27

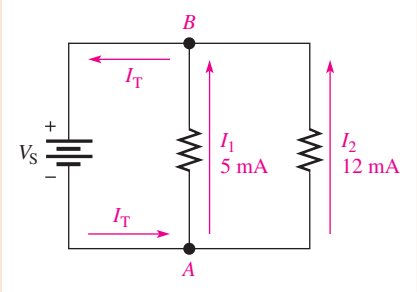

Solution The total current out of node *A* is the sum of the two branch currents. Therefore, the total current into node *A* is

$$I_T = I_1 + I_2 = 5\text{ mA} + 12\text{ mA} = \mathbf{17\ mA}$$

www.EngineeringBooksPdf.com

The total current entering node B is the sum of the two branch currents. Thus, the total current out of node B is

$$I_T = I_1 + I_2 = 5\text{ mA} + 12\text{ mA} = \mathbf{17\ mA}$$

Related Problem If a third resistor is connected in parallel to the circuit of Figure 27 and its current is 3 mA, what is the total current into node A and out of node B?

Open Multisim file E05-13. Verify that the total current is the sum of the branch currents. Repeat for the related problem.

EXAMPLE 14

Determine the current through R_2 in Figure 28.

▶ **FIGURE 28**

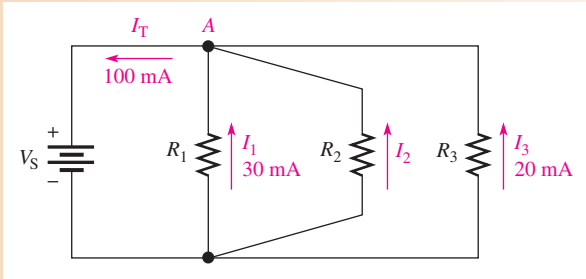

Solution The total current out of node A is $I_T = I_1 + I_2 + I_3$. From Figure 28, you know the total current and the branch currents through R_1 and R_3. Solve for I_2.

$$I_2 = I_T - I_1 - I_3 = 100\text{ mA} - 30\text{ mA} - 20\text{ mA} = \mathbf{50\ mA}$$

Related Problem Determine I_T and I_2 if a fourth branch is added to the circuit in Figure 28 and it has 12 mA through it.

Open Multisim file E05-14. Verify the calculated value for I_2. Repeat for the related problem.

EXAMPLE 15

Use Kirchhoff's current law to find the current measured by ammeters A3 and A5 in Figure 29.

▶ **FIGURE 29**

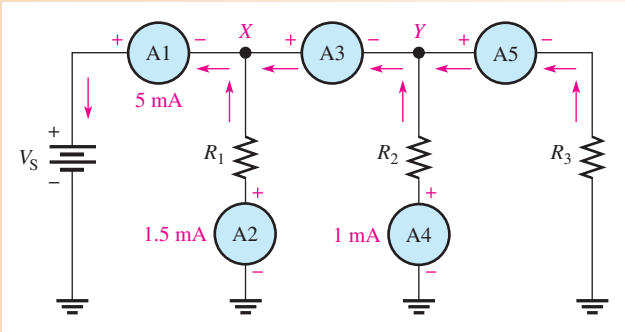

www.EngineeringBooksPdf.com

Solution The total current out of node X is 5 mA. Two currents are into node X: 1.5 mA through resistor R_1 and the current through A3. Kirchhoff's current law at node X is

$$5\text{ mA} = 1.5\text{ mA} + I_{A3}$$

Solving for I_{A3} yields

$$I_{A3} = 5\text{ mA} - 1.5\text{ mA} = \mathbf{3.5\text{ mA}}$$

The total current out of node Y is $I_{A3} = 3.5$ mA. Two currents are into node Y: 1 mA through resistor R_2 and the current through A5 and R_3. Kirchhoff's current law applied to node Y gives

$$3.5\text{ mA} = 1\text{ mA} + I_{A5}$$

Solving for I_{A5} yields

$$I_{A5} = 3.5\text{ mA} - 1\text{ mA} = \mathbf{2.5\text{ mA}}$$

Related Problem How much current will an ammeter measure when it is placed in the circuit in Figure 29 right below R_3? Below the negative battery terminal?

SECTION 5 CHECKUP

1. State Kirchhoff's current law in two ways.
2. A total current of 2.5 A is into a node and the current out of the node divides into three parallel branches. What is the sum of all three branch currents?
3. In Figure 30, 100 mA and 300 mA are into the node. What is the amount of current out of the node?
4. Each of the two taillights on a trailer draws 1 A and the two brake lights each draw another 1 A. What is the current in the ground lead to the trailer when all lights are on?
5. A underground pump has 10 A of current on the hot line. What should be the current on the neutral line?

▶ FIGURE 30

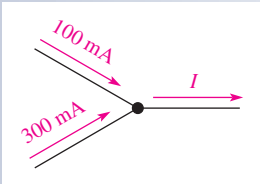

6 CURRENT DIVIDERS

A parallel circuit acts as a **current divider** because the current entering the junction of parallel branches "divides" up into several individual branch currents.

After completing this section, you should be able to

- **Use a parallel circuit as a current divider**
  - Apply the current-divider formula
  - Determine an unknown branch current

In a parallel circuit, the total current into the junction of the parallel branches (node) divides among the branches. Thus, a parallel circuit acts as a current divider. This current-divider principle is illustrated in Figure 31 for a two-branch parallel circuit in which part of the total current I_T goes through R_1 and part through R_2.

www.EngineeringBooksPdf.com

▶ FIGURE 31

Total current divides between the two branches.

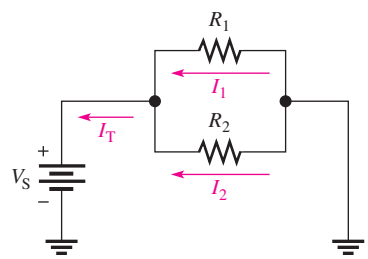

Since the same voltage is across each of the resistors in parallel, the branch currents are inversely proportional to the values of the resistors. For example, if the value of R_2 is twice that of R_1, then the value of I_2 is one-half that of I_1. In other words,

The total current divides among parallel resistors into currents with values inversely proportional to the resistance values.

The branches with higher resistance have less current, and the branches with lower resistance have more current, in accordance with Ohm's law. If all the branches have the same resistance, the branch currents are all equal.

Figure 32 shows specific values to demonstrate how the currents divide according to the branch resistances. Notice that in this case the resistance of the upper branch is one-tenth the resistance of the lower branch, but the upper branch current is ten times the lower branch current.

▶ FIGURE 32

The branch with the lowest resistance has the most current, and the branch with the highest resistance has the least current.

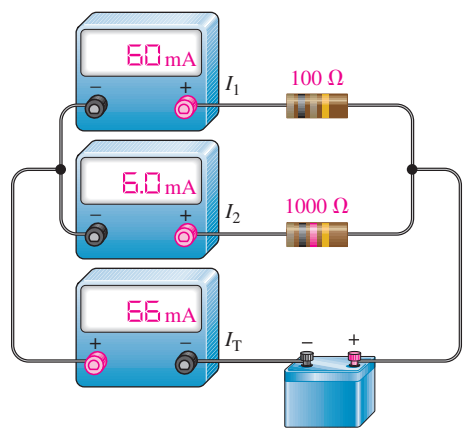

Current-Divider Formula

You can develop a formula for determining how currents divide among any number of parallel resistors, as shown in Figure 33, where n is the total number of resistors.

▶ FIGURE 33

A parallel circuit with n branches.

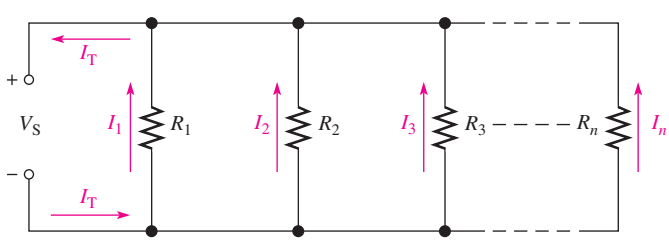

The current through any one of the parallel resistors is I_x, where x represents the number of a particular resistor (1, 2, 3, and so on). By Ohm's law, you can express the current through any one of the resistors in Figure 33 as follows:

$$I_x = \frac{V_S}{R_x}$$

www.EngineeringBooksPdf.com

The source voltage, V_S, appears across each of the parallel resistors, and R_x represents any one of the parallel resistors. The total source voltage, V_S, is equal to the total current times the total parallel resistance.

$$V_S = I_T R_T$$

Substituting $I_T R_T$ for V_S in the expression for I_x results in

$$I_x = \frac{I_T R_T}{R_x}$$

Rearranging terms yields

$$\boldsymbol{I_x = \left(\frac{R_T}{R_x}\right) I_T} \qquad \text{Equation 5}$$

where $x = 1, 2, 3$, etc. Equation 5 is the general current-divider formula and applies to a parallel circuit with any number of branches.

The current (I_x) through any branch equals the total parallel resistance (R_T) divided by the resistance (R_x) of that branch, and then multiplied by the total current (I_T) into the junction of parallel branches.

EXAMPLE 16

Determine the current through each resistor in the circuit of Figure 34.

▶ FIGURE 34

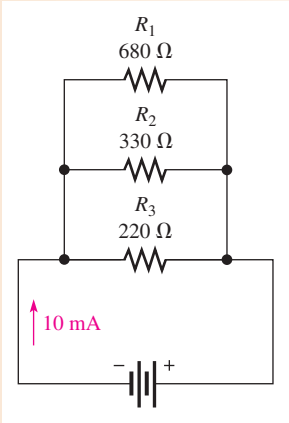

Solution First, calculate the total parallel resistance.

$$R_T = \frac{1}{\frac{1}{R_1} + \frac{1}{R_2} + \frac{1}{R_3}} = \frac{1}{\frac{1}{680\,\Omega} + \frac{1}{330\,\Omega} + \frac{1}{220\,\Omega}} = 111\,\Omega$$

The total current is 10 mA. Use Equation 5 to calculate each branch current.

$$I_1 = \left(\frac{R_T}{R_1}\right) I_T = \left(\frac{111\,\Omega}{680\,\Omega}\right) 10\text{ mA} = \mathbf{1.63\ mA}$$

$$I_2 = \left(\frac{R_T}{R_2}\right) I_T = \left(\frac{111\,\Omega}{330\,\Omega}\right) 10\text{ mA} = \mathbf{3.36\ mA}$$

$$I_3 = \left(\frac{R_T}{R_3}\right) I_T = \left(\frac{111\,\Omega}{220\,\Omega}\right) 10\text{ mA} = \mathbf{5.05\ mA}$$

Related Problem Determine the current through R_1 and R_2 in Figure 34 if R_3 is removed. Assume the source voltage remains the same.

www.EngineeringBooksPdf.com

Current-Divider Formulas for Two Branches You already know how to use Ohm's law ($I = V/R$) to determine the current in any branch in a parallel circuit when you know the voltage and resistance. When you do not know the voltage but you know total current, you can find both of the branch currents (I_1 and I_2) by using the following formulas:

Equation 6

$$I_1 = \left(\frac{R_2}{R_1 + R_2}\right) I_T$$

Equation 7

$$I_2 = \left(\frac{R_1}{R_1 + R_2}\right) I_T$$

These formulas show that the current in either branch is equal to the opposite branch resistance divided by the sum of the two resistances and then multiplied by the total current.

EXAMPLE 17

Find I_1 and I_2 in Figure 35.

▶ FIGURE 35

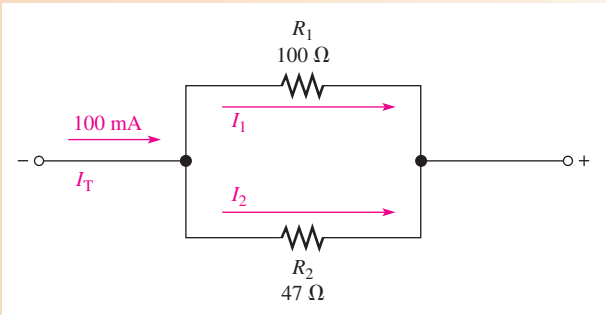

Solution Use Equation 6 to determine I_1.

$$I_1 = \left(\frac{R_2}{R_1 + R_2}\right) I_T = \left(\frac{47\ \Omega}{147\ \Omega}\right) 100\ \text{mA} = \mathbf{32.0\ mA}$$

Use Equation 7 to determine I_2.

$$I_2 = \left(\frac{R_1}{R_1 + R_2}\right) I_T = \left(\frac{100\ \Omega}{147\ \Omega}\right) 100\ \text{mA} = \mathbf{68.0\ mA}$$

Related Problem If $R_1 = 56\ \Omega$ and $R_2 = 82\ \Omega$ in Figure 35 and I_T stays the same, what will each branch current be?

SECTION 6 CHECKUP

1. A circuit has the following resistors in parallel with a voltage source: 220 Ω, 100 Ω, 68 Ω, 56 Ω, and 22 Ω. Which resistor has the most current through it? The least current?
2. Determine the current through R_3 in Figure 36.
3. Find the currents through each resistor in the circuit of Figure 37.

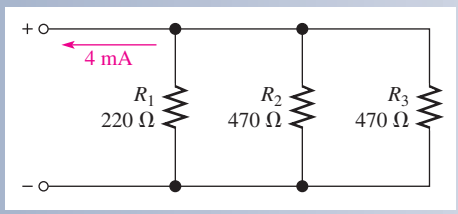

▲ FIGURE 36

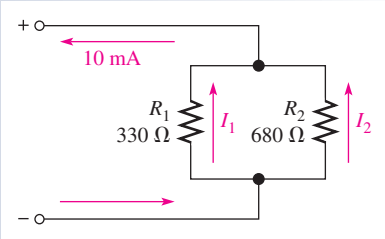

▲ FIGURE 37

www.EngineeringBooksPdf.com

7 POWER IN PARALLEL CIRCUITS

Total power in a parallel circuit is found by adding up the powers of all the individual resistors, the same as for series circuits.

After completing this section, you should be able to

- **Determine power in a parallel circuit**

Equation 8 states the formula for total power for any number of resistors in parallel.

$$P_T = P_1 + P_2 + P_3 + \cdots + P_n$$ **Equation 8**

where P_T is the total power and P_n is the power in the last resistor in parallel. As you can see, the powers are additive, just as in a series circuit.

Power formulas are directly applicable to parallel circuits. The following formulas are used to calculate the total power P_T:

$$P_T = V_S I_T$$

$$P_T = I_T^2 R_T$$

$$P_T = \frac{V_S^2}{R_T}$$

where V_S is the voltage across the parallel circuit, I_T is the total current into the parallel circuit, and R_T is the total resistance of the parallel circuit. Examples 18 and 19 show how total power can be calculated in a parallel circuit.

EXAMPLE 18

Determine the total amount of power in the parallel circuit in Figure 38.

▶ FIGURE 38

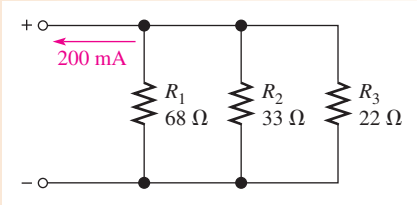

Solution The total current is 200 mA. The total resistance is

$$R_T = \frac{1}{\frac{1}{68\ \Omega} + \frac{1}{33\ \Omega} + \frac{1}{22\ \Omega}} = 11.1\ \Omega$$

The easiest formula to use is $P_T = I_T^2 R_T$ since you know both I_T and R_T. Thus,

$$P_T = I_T^2 R_T = (200\text{ mA})^2(11.1\ \Omega) = \mathbf{444\ mW}$$

Let's demonstrate that if you determine the power in each resistor and if you add all of these values together, you get the same result. First, find the voltage across each branch of the circuit.

$$V_S = I_T R_T = (200\text{ mA})(11.1\ \Omega) = 2.22\text{ V}$$

www.EngineeringBooksPdf.com

Remember that the voltage across all branches is the same.

Next, use $P = V_S^2/R$ to calculate the power for each resistor.

$$P_1 = \frac{(2.22\text{ V})^2}{68\ \Omega} = 72.5\text{ mW}$$

$$P_2 = \frac{(2.22\text{ V})^2}{33\ \Omega} = 149\text{ mW}$$

$$P_3 = \frac{(2.22\text{ V})^2}{22\ \Omega} = 224\text{ mW}$$

Now, add these powers to get the total power.

$$P_T = 72.5\text{ mW} + 149\text{ mW} + 224\text{ mW} = \mathbf{446\ mW}$$

This calculation shows that the sum of the individual powers is equal (approximately) to the total power as determined by one of the power formulas. Rounding to three significant figures accounts for the difference.

Related Problem Find the total power in Figure 38 if the total voltage is doubled.

EXAMPLE 19

The amplifier in one channel of a stereo system as shown in Figure 39 drives two parallel speakers. If the maximum voltage* to the speakers is 15 V, how much power must the amplifier be able to deliver to the speakers?

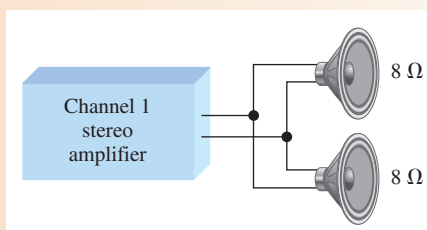

▲ FIGURE 39

Solution The speakers are connected in parallel to the amplifier output, so the voltage across each is the same. The maximum power to each speaker is

$$P_{max} = \frac{V_{max}^2}{R} = \frac{(15\text{ V})^2}{8\ \Omega} = 28.1\text{ W}$$

The total power that the amplifier must be capable of delivering to the speaker system is twice the power in an individual speaker because the total power is the sum of the individual powers.

$$P_{T(max)} = P_{max} + P_{max} = 2P_{max} = 2(28.1\text{ W}) = \mathbf{56.2\ W}$$

Related Problem If the amplifier can produce a maximum of 18 V, what is the maximum total power to the speakers?

*Voltage is ac in this case; but power is determined the same for ac voltage as for dc voltage.

www.EngineeringBooksPdf.com

SECTION 7 CHECKUP

1. If you know the power in each resistor in a parallel circuit, how can you find the total power?
2. The resistors in a parallel circuit dissipate the following powers: 1 W, 2 W, 5 W, and 8 W. What is the total power in the circuit?
3. A circuit has a 1.0 kΩ, a 2.7 kΩ, and a 3.9 kΩ resistor in parallel. There is a total current of 1 mA into the parallel circuit. What is the total power?
4. Normally, circuits are protected with a fuse that is at least 120% of the maximum current expected. What size of fuse should be installed for an automotive rear window defroster that is rated for 100 W? Assume the battery voltage is 12.6 V.

8 TROUBLESHOOTING

Recall that an open circuit is one in which the current path is interrupted and there is no current. In this section, you will see how an open in a parallel branch affects the parallel circuit.

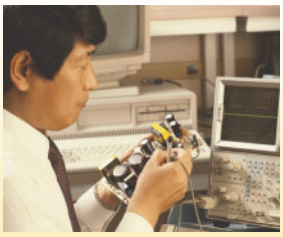

After completing this section, you should be able to

- **Troubleshoot parallel circuits**
  - Check for an open in a circuit

Open Branches

If a switch is connected in a branch of a parallel circuit, as shown in Figure 40, an open or a closed path can be made by the switch. When the switch is closed, as in Figure 40(a), R_1 and R_2 are in parallel. The total resistance is 50 Ω (two 100 Ω resistors in parallel). Current is through both resistors. If the switch is opened, as in Figure 40(b), R_1 is effectively removed from the circuit, and the total resistance is 100 Ω. There is still the same voltage across R_2 and the same current through it although the total current from the source is reduced by the amount of the R_1 current.

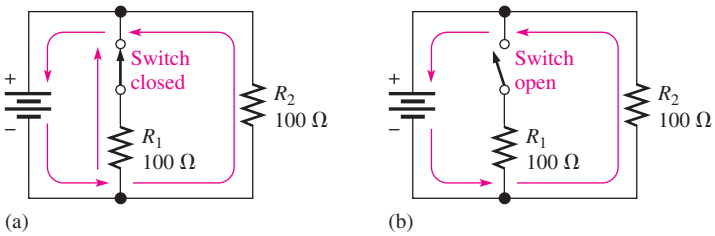

FIGURE 40

When the switch opens, total current decreases and current through R_2 remains unchanged.

In general,

When an open occurs in a parallel branch, the total resistance increases, the total current decreases, and the same current continues through each of the remaining parallel paths.

Consider the lamp circuit in Figure 41. There are four bulbs in parallel with a 12 V source. In part (a), there is current through each bulb. Now suppose that one of the bulbs

www.EngineeringBooksPdf.com

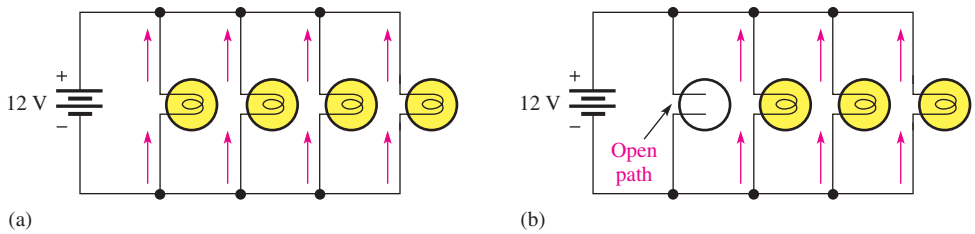

▲ FIGURE 41

When a lamp filament opens, total current decreases by the amount of current in the lamp that opened. The other branch currents remain unchanged.

burns out, creating an open path as shown in Figure 41(b). This light will go out because there is no current through the open path. Notice, however, that current continues through all the other parallel bulbs, and they continue to glow. The open branch does not change the voltage across the remaining parallel branches; it remains at 12 V, and the current through each branch remains the same.

You can see that a parallel circuit has an advantage over a series connection in lighting systems because if one or more of the parallel bulbs burn out, the others will stay on. In a series circuit, when one bulb goes out, all of the others go out also because the current path is completely interrupted.

When a resistor in a parallel circuit opens, the open resistor cannot be located by measurement of the voltage across the branches because the same voltage exists across all the branches. Thus, there is no way to tell which resistor is open by simply measuring voltage (the half-splitting method is not applicable). The good resistors will always have the same voltage as the open one, as illustrated in Figure 42 (note that the middle resistor is open).

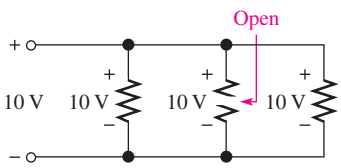

▲ FIGURE 42

All parallel branches (open or not) have the same voltage.

If a visual inspection does not reveal the open resistor, it can be located by resistance or current measurements. In practice, measuring resistance or current is more difficult than measuring voltage because you must disconnect a component to measure the resistance and you must insert an ammeter in series to measure the current. Thus, a wire or a printed circuit connection must usually be cut or disconnected, or one end of a component must be lifted off the circuit board, in order to connect a DMM to measure resistance and current. This procedure, of course, is not required when voltage measurements are made because the meter leads are simply connected across a component.

HANDS ON TIP

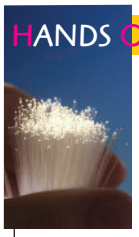

An alternate way to measure current without having to break a circuit to connect an ammeter is to place, as part of the original circuit, a 1 Ω series resistor in each line through which current is to be measured. This small "sense" resistor will generally not affect the total resistance. By measuring the voltage across the sense resistor, you automatically have the current reading since

$$I = \frac{V}{R} = \frac{V}{1\,\Omega} = V$$

Finding an Open Branch by Current Measurement

In a parallel circuit with a suspected open branch, the total current can be measured to find the open. *When a parallel resistor opens, I_T is always less than its normal value.* Once you know I_T and the voltage across the branches, a few calculations will determine the open resistor when all the resistors are of different values.

Consider the two-branch circuit in Figure 43(a). If one of the resistors opens, the total current will equal the current in the good resistor. Ohm's law quickly tells you what the current in each resistor should be.

$$I_1 = \frac{50\text{ V}}{560\,\Omega} = 89.3\text{ mA}$$

$$I_2 = \frac{50\text{ V}}{100\,\Omega} = 500\text{ mA}$$

$$I_T = I_1 + I_2 = 589.3\text{ mA}$$

If R_2 is open, the total current is 89.3 mA, as indicated in Figure 43(b). If R_1 is open, the total current is 500 mA, as indicated in Figure 43(c).

www.EngineeringBooksPdf.com

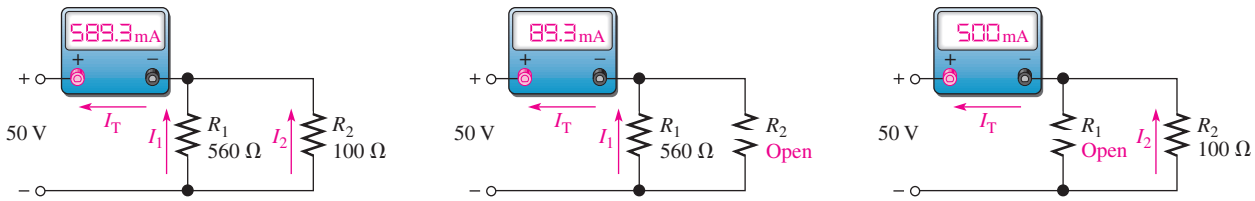

(a) Current with no open branch (b) Current with R_2 open (c) Current with R_1 open

▲ **FIGURE 43**

Finding an open path by current measurement.

This procedure can be extended to any number of branches having unequal resistances. If the parallel resistances are all equal, the current in each branch must be checked until a branch is found with no current.

EXAMPLE 20

In Figure 44, there is a total current of 31.09 mA, and the voltage across the parallel branches is 20 V. Is there an open resistor, and if so, which one is it?

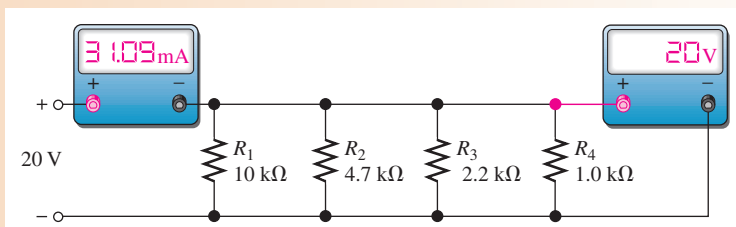

▲ **FIGURE 44**

Solution Calculate the current in each branch.

$$I_1 = \frac{V}{R_1} = \frac{20\text{ V}}{10\text{ k}\Omega} = 2\text{ mA}$$

$$I_2 = \frac{V}{R_2} = \frac{20\text{ V}}{4.7\text{ k}\Omega} = 4.26\text{ mA}$$

$$I_3 = \frac{V}{R_3} = \frac{20\text{ V}}{2.2\text{ k}\Omega} = 9.09\text{ mA}$$

$$I_4 = \frac{V}{R_4} = \frac{20\text{ V}}{1.0\text{ k}\Omega} = 20\text{ mA}$$

The total current should be

$$I_T = I_1 + I_2 + I_3 + I_4 = 2\text{ mA} + 4.26\text{ mA} + 9.09\text{ mA} + 20\text{ mA} = 35.35\text{ mA}$$

The actual measured current is 31.09 mA, as stated, which is 4.26 mA less than normal, indicating that the branch with 4.26 mA is open. Thus, **R_2 must be open**.

Related Problem What is the total current measured in Figure 44 if R_4 and not R_2 is open?

Open Multisim file E05-20. Measure the total current and the current in each resistor. There are no faults in the circuit.

www.EngineeringBooksPdf.com

Finding an Open Branch by Resistance Measurement

If the parallel circuit to be checked can be disconnected from its voltage source and from any other circuit to which it may be connected, a measurement of the total resistance can be used to locate an open branch.

Recall that conductance, G, is the reciprocal of resistance ($1/R$) and its unit is the siemens (S). The total conductance of a parallel circuit is the sum of the conductances of all the resistors.

$$G_T = G_1 + G_2 + G_3 + \cdots + G_n$$

To locate an open branch, do the following steps:

1. Calculate what the total conductance should be using the individual resistor values.

$$G_{T(calc)} = \frac{1}{R_1} + \frac{1}{R_2} + \frac{1}{R_3} + \cdots + \frac{1}{R_n}$$

2. Measure the total resistance and calculate the total measured conductance.

$$G_{T(meas)} = \frac{1}{R_{T(meas)}}$$

3. Subtract the measured total conductance (Step 2) from the calculated total conductance (Step 1). The result is the conductance of the open branch, and the resistance is obtained by taking its reciprocal ($R = 1/G$).

$$R_{open} = \frac{1}{G_{T(calc)} - G_{T(meas)}}$$

EXAMPLE 21

Your ohmmeter measures 402 Ω between pin 1 and pin 4 in Figure 45. Check the printed circuit board between these two pins for open branches.

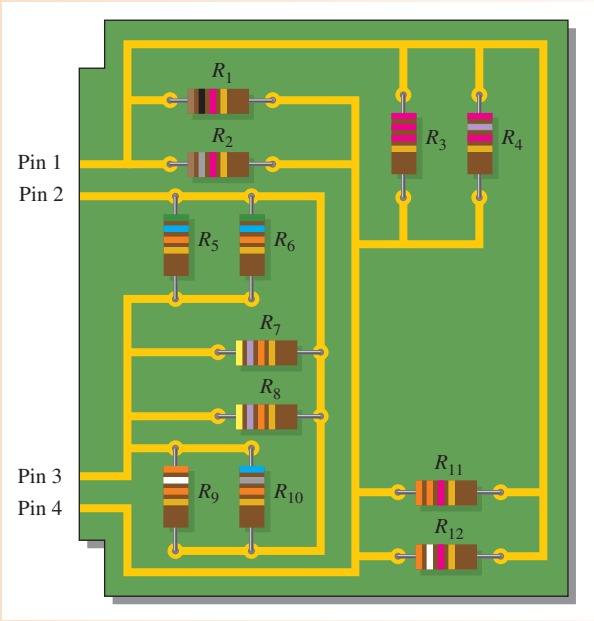

▲ FIGURE 45

www.EngineeringBooksPdf.com

Solution The circuit between pin 1 and pin 4 is checked as follows:

1. Calculate what the total conductance should be using the individual resistor values.

$$G_{T(calc)} = \frac{1}{R_1} + \frac{1}{R_2} + \frac{1}{R_3} + \frac{1}{R_4} + \frac{1}{R_{11}} + \frac{1}{R_{12}}$$
$$= \frac{1}{1.0\ k\Omega} + \frac{1}{1.8\ k\Omega} + \frac{1}{2.2\ k\Omega} + \frac{1}{2.7\ k\Omega} + \frac{1}{3.3\ k\Omega} + \frac{1}{3.9\ k\Omega}$$
$$= 2.94\ mS$$

2. Calculate the total measured conductance.

$$G_{T(meas)} = \frac{1}{402\ \Omega} = 2.49\ mS$$

3. Subtract the measured total conductance (Step 2) from the calculated total conductance (Step 1). The result is the conductance of the open branch and the resistance is obtained by taking its reciprocal.

$$G_{open} = G_{T(calc)} - G_{T(meas)} = 2.94\ mS - 2.49\ mS = 0.45\ mS$$
$$R_{open} = \frac{1}{G_{open}} = \frac{1}{0.45\ mS} = 2.2\ k\Omega$$

Resistor $\boldsymbol{R_3}$ **is open** and must be replaced.

Related Problem Your ohmmeter indicates 9.6 kΩ between pin 2 and pin 3 on the PC board in Figure 45. Determine if this is correct and, if not, which resistor is open.

Shorted Branches

When a branch in a parallel circuit shorts, the current increases to an excessive value, usually causing the resistor to burn open or a fuse or circuit breaker to blow. This results in a difficult troubleshooting problem because it is hard to isolate the shorted branch.

A pulser and a current tracer are tools often used to find shorts in a circuit. They are not restricted to use in digital circuits but can be effective in any type of circuit. The pulser is a pen-shaped tool that applies pulses to a selected point in a circuit, causing pulses of current through the shorted path. The current tracer is also a pen-shaped tool that senses pulses of current. By following the current with the tracer, the current path can be identified.

SECTION 8 CHECKUP

1. If a parallel branch opens, what changes can be detected in the circuit's voltage and the currents, assuming that the parallel circuit is across a constant voltage source?
2. What happens to the total resistance if one branch opens?
3. If several light bulbs are connected in parallel and one of the bulbs opens (burns out), will the others continue to glow?
4. There is one ampere of current in each branch of a parallel circuit. If one branch opens, what is the current in each of the remaining branches?
5. Assume a load draws a hot current of 1.00 A, and the neutral return current is 0.90 A. If the source voltage is 120 V, what is the apparent faulty resistance in the ground path?

www.EngineeringBooksPdf.com

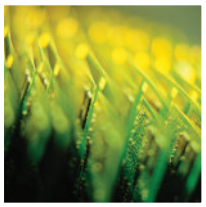

Application Assignment

PUTTING YOUR KNOWLEDGE TO WORK

In this application, a dc power supply is modified by adding a 3-range ammeter to indicate current to the load. Parallel resistances can be used to extend the range of an ammeter. These parallel resistors, called *shunts,* bypass current around the meter movement, allowing for the meter to effectively measure higher currents than the maximum current for which the meter movement is designed. A multiple-range analog meter circuit is based on resistance placed in parallel with the meter movement to achieve the specified full-scale deflection of the needle.

General Theory of Operation

Parallel circuits are an important part of the operation of this type of ammeter because they allow the user to select various ranges in order to measure many different current values.

The mechanism in an analog ammeter that causes the pointer to move in proportion to the current is called the *meter movement,* which is based on a magnetic principle. Right now, all you need to know is that a meter movement has a certain resistance and a maximum current. This maximum current, called the *full-scale deflection current,* causes the pointer to go all the way to the end of the scale. For example, a certain meter movement has a 50 Ω resistance and a full-scale deflection current of 1 mA. A meter with this particular movement can measure currents of 1 mA or less. Currents greater than 1 mA will cause the pointer to "peg" (or stop) at full scale. Figure 46 illustrates a 1 mA meter.

Figure 47 shows a simple ammeter with a resistor in parallel with the meter movement; this resistor is called a *shunt resistor.* Its purpose is to bypass any current in excess of 1 mA around the meter movement to extend the range of currents that can be

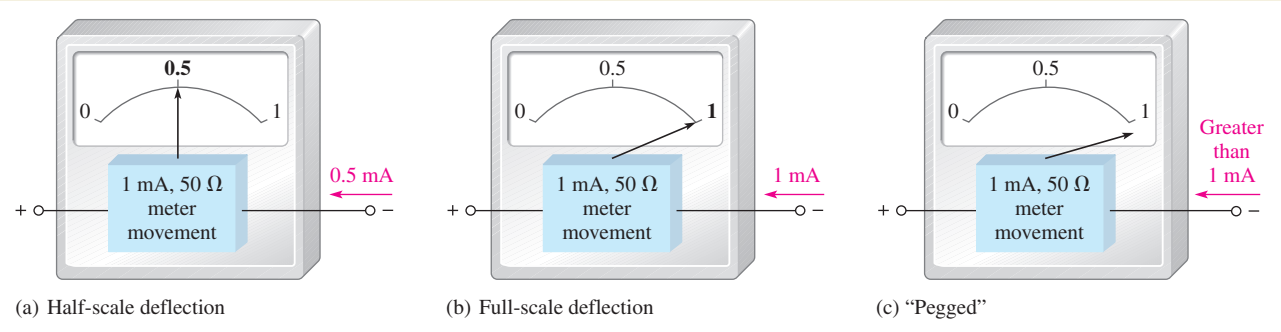

▲ FIGURE 46

A 1 mA meter.

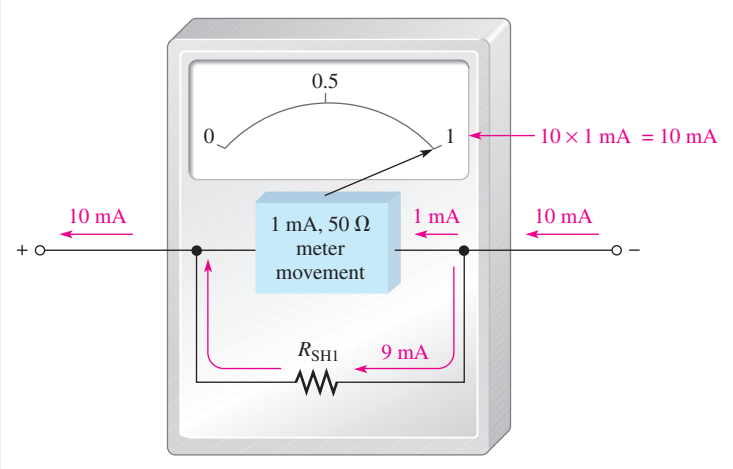

▲ FIGURE 47

A 10 mA meter.

www.EngineeringBooksPdf.com

measured. The figure specifically shows 9 mA through the shunt resistor and 1 mA through the meter movement. Thus, up to 10 mA can be measured. To find the actual current value, simply multiply the reading on the scale by 10.

A practical ammeter has a range switch that permits the selection of several full-scale current settings. In each switch position, a certain amount of current is bypassed through a parallel resistor as determined by the resistance value. In our example, the current through the movement is never greater than 1 mA.

Figure 48 illustrates a meter with three ranges: 1 mA, 10 mA, and 100 mA. When the range switch is in the 1 mA position, all of the current coming into the meter goes through the meter movement. In the 10 mA setting, up to 9 mA goes through R_{SH1} and up to 1 mA through the movement. In the 100 mA setting, up to 99 mA goes through R_{SH2} and the movement can still have only 1 mA for full-scale.

The scale reading is interpreted based on the range setting. For example, in Figure 48, if 50 mA of current are being measured, the needle points to the 0.5 mark on the scale; you must multiply 0.5 by 100 to find the current value. In this situation, 0.5 mA is through the movement (half-scale deflection), and 49.5 mA are through R_{SH2}.

The Power Supply

A rack-mounted power supply is shown in Figure 49. The voltmeter indicates the output voltage, which can be adjusted from 0 V to 10 V using the voltage control. The power supply is capable of providing up to 2 A to a load. A basic block diagram of the power supply is shown in Figure 50. It consists of a rectifier circuit that converts ac voltage from the wall outlet to dc voltage and a regulator circuit that keeps the output voltage at a constant value.

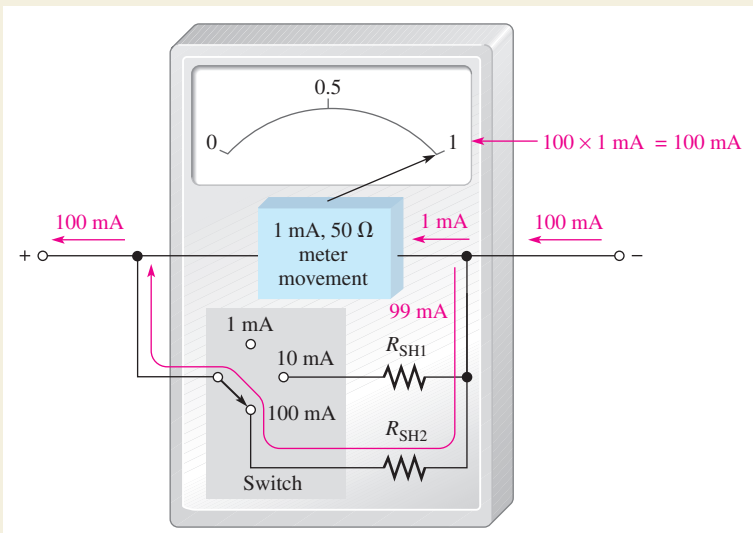

▲ FIGURE 48

A milliammeter with three ranges.

▲ FIGURE 49

Front panel view of a rack-mounted power supply.

www.EngineeringBooksPdf.com

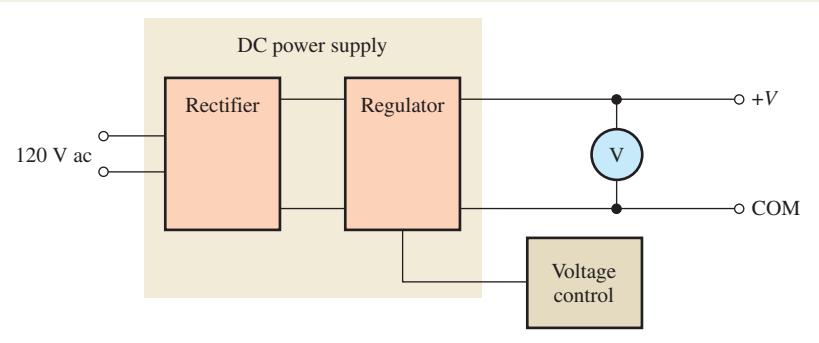

▲ FIGURE 50

Basic block diagram of the dc power supply.

It is required that the power supply be modified by adding an ammeter with three switch-selected current ranges of 25 mA, 250 mA, and 2.5 A. To accomplish this, two shunt resistances are used that can each be switched into a parallel connection with the meter movement. This approach works fine as long as the required values of the shunt resistors are not too small. However, there are problems at very low values of shunt resistance and you will see why next.

The Shunt Circuit

An ammeter is selected that has a full-scale deflection of 25 mA and a resistance of 6 Ω. Two shunt resistors must be added—one for 250 mA and one for 2.5 A full-scale deflections. The internal meter movement provides the 25 mA range. This is shown in Figure 51. The range selection is provided by a 1-pole, 3-position rotary switch with a contact resistance of 50 mΩ. Contact resistance of switches can be from less than 20 mΩ to about 100 mΩ. The contact resistance of a given switch can vary with temperature, current, and usage and, therefore, cannot be relied upon to remain within a reasonable tolerance of the specified value. Also, the switch is a make-before-break type, which means that contact with the previous position is not broken until contact with the new position is made.

The shunt resistance value for the 2.5 A range is determined as follows where the voltage across the meter movement is

$$V_M = I_M R_M = (25\text{ mA})(6\ \Omega) = 150\text{ mV}$$

The current through the shunt resistor for full-scale deflection is

$$I_{SH2} = I_{FULL\ SCALE} - I_M = 2.5\text{ A} - 25\text{ mA} = 2.475\text{ A}$$

The total shunt resistance is

$$R_{SH2(tot)} = \frac{V_M}{I_{SH2}} = \frac{150\text{ mV}}{2.475\text{ A}} = 60.6\text{ m}\Omega$$

Low-ohm precision resistors are generally available in values from 1 mΩ to 10 Ω or greater from various manufacturers.

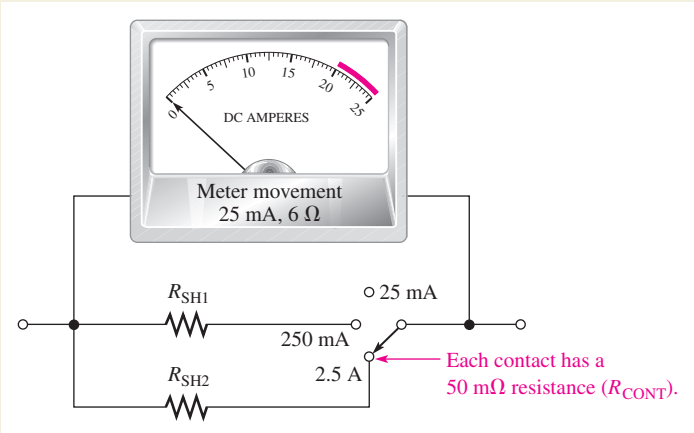

▲ FIGURE 51

Ammeter modified to provide three current ranges.

www.EngineeringBooksPdf.com

Notice in Figure 51 that the contact resistance, R_{CONT}, of the switch appears in series with R_{SH2}. Since the total shunt resistance must be 60.6 mΩ, the value of the shunt resistor R_{SH2} is

$$R_{SH2} = R_{SH2(tot)} - R_{CONT} = 60.6\ \text{m}\Omega - 50\ \text{m}\Omega = 10.6\ \text{m}\Omega$$

Although this value, or one close to it, may be available, the problem in this case is that the switch contact resistance is much larger than the resistance of R_{SH2} and any variation in it would create a significant inaccuracy in the meter. As you can see, this approach is not acceptable for these particular requirements.

Another Approach

A variation of the standard shunt resistance circuit is shown in Figure 52. The shunt resistor, R_{SH}, is connected in parallel for the two higher current range settings and disconnected for the 25 mA setting using a 2-pole, 3-position switch. This circuit avoids dependency on the switch contact resistance by using resistor values that are large enough to make it insignificant. The disadvantages of this meter circuit are that it requires a more complex switch and the voltage drops from input to output are greater than in the previous shunt circuit.

For the 250 mA range, the current through the meter movement for full-scale deflection is 25 mA. The voltage across the meter movement is 150 mV

$$I_{SH} = 250\ \text{mA} - 25\ \text{mA} = 225\ \text{mA}$$

$$R_{SH} = \frac{150\ \text{mV}}{225\ \text{mA}} = 0.67\ \Omega = 670\ \text{m}\Omega$$

This value of R_{SH} is more than thirteen times the expected switch contact resistance of 50 mΩ, thus minimizing the effect of the contact resistance.

For the 2.5 A range, the current through the meter movement for full-scale deflection is still 25 mA. This is also the current through R_1.

$$I_{SH} = 2.5\ \text{A} - 25\ \text{mA} = 2.475\ \text{A}$$

The voltage across the meter circuit from A to B is

$$V_{AB} = I_{SH}R_{SH} = (2.475\ \text{A})(670\ \text{m}\Omega) = 1.66\ \text{V}$$

Applying Kirchhoff's voltage law and Ohm's law to find R_1,

$$V_{R1} + V_M = V_{AB}$$

$$V_{R1} = V_{AB} - V_M = 1.66\ \text{V} - 150\ \text{mV} = 1.51\ \text{V}$$

$$R_1 = \frac{V_{R1}}{I_M} = \frac{1.51\ \text{V}}{25\ \text{mA}} = 60.4\ \Omega$$

This value is much greater than the contact resistance of the switch, thus making the effect of R_{CONT} negligible.

- Determine the maximum power dissipated by R_{SH} in Figure 52 for each range setting.
- How much voltage is there from A to B in Figure 52 when the switch is set to the 2.5 A range and the current is 1 A?
- The meter indicates 250 mA. How much does the voltage across the meter circuit from A to B change when the switch is moved from the 250 mA position to the 2.5 A position?
- Assume the meter movement has a resistance of 4 Ω instead of 6 Ω. Specify any changes necessary in the circuit of Figure 52.

Implementing the Power Supply Modification

Once the proper values are obtained, the resistors are placed on a board which is then mounted in the power supply. The resistors and the range switch are connected to the power supply as shown in Figure 53. The ammeter circuit is connected between the rectifier circuit in the power supply and the regulator circuit in order to reduce the impact of the voltage drop across the meter circuit on the output voltage. The regulator maintains, within certain limits, a constant dc output voltage even though its input voltage coming from the meter circuit may change.

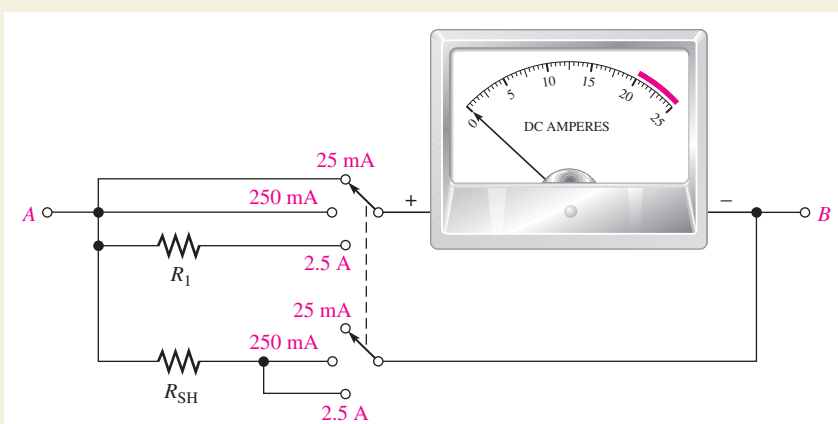

▲ **FIGURE 52**

Meter circuit redesigned to eliminate or minimize the effect of switch contact resistance. The switch is a 2-pole, 3-position make-before-break rotary type.

www.EngineeringBooksPdf.com

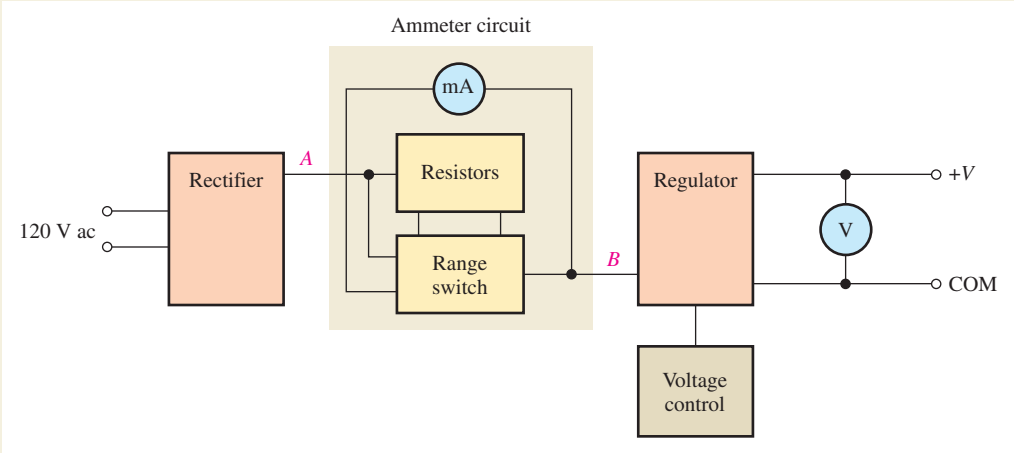

▲ FIGURE 53

Block diagram of dc power supply with 3-range milliammeter.

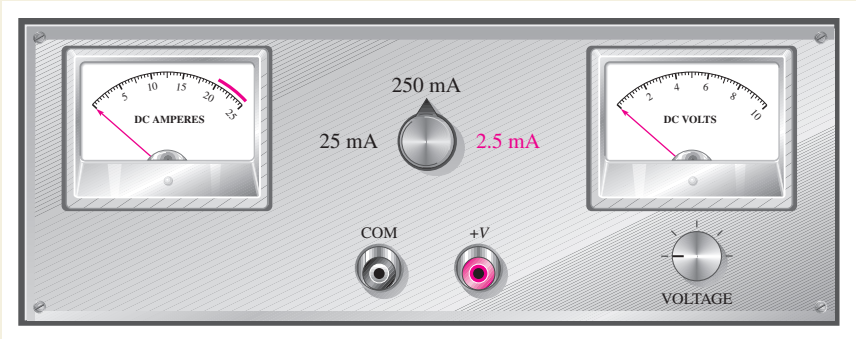

▲ FIGURE 54

The power supply with the addition of the milliammeter and the current range selection switch.

Figure 54 shows the modified power supply front panel with the rotary range switch and milliammeter installed. The red portion of the scale indicates excess current for the 2.5 A range since the power supply has a maximum current of 2 A for safe operation.

Review

1. When the meter in Figure 52 is set to the 250 mA range, which resistance has the most current through it?
2. Determine the total resistance from *A* to *B* of the meter circuit in Figure 52 for each of the three current ranges.
3. Explain why the circuit in Figure 52 was used instead of the one in Figure 51.
4. If the ammeter pointer is at 15 and the range switch is set to 250 mA, what is the current?
5. How much current is indicated by the ammeter in Figure 55 for each of the three range switch settings in Figure 52?

▲ FIGURE 55

www.EngineeringBooksPdf.com

SUMMARY

- Resistors in parallel are connected between two nodes in a circuit.
- A parallel circuit provides more than one path for current.
- The total parallel resistance is less than the lowest-value parallel resistor.
- The voltages across all branches of a parallel circuit are the same.
- Kirchhoff's current law: The sum of the currents into a node (total current in) equals the sum of the currents out of the node (total current out).

  The algebraic sum of all the currents entering and leaving a node is zero.
- A parallel circuit is a current divider, so called because the total current entering a node divides up into each of the branches connected to the node.
- If all of the branches of a parallel circuit have equal resistance, the currents through all of the branches are equal.
- The total power in a parallel-resistive circuit is the sum of all of the individual powers of the resistors making up the parallel circuit.
- The total power for a parallel circuit can be calculated with the power formulas using values of total current, total resistance, or total voltage.
- If one of the branches of a parallel circuit opens, the total resistance increases, and therefore the total current decreases.
- If a branch of a parallel circuit opens, there is still the same current through the remaining branches.

KEY TERMS

Branch One current path in a parallel circuit.

Current divider A parallel circuit in which the currents divide inversely proportional to the parallel branch resistances.

Kirchhoff's current law A law stating that the total current into a node equals the total current out of the node. Equivalently, it can be stated that the algebraic sum of all the currents entering and leaving a node is zero.

Node A point or junction in a circuit at which two or more components are connected.

Parallel The relationship between two circuit components that exists when they are connected between the same pair of nodes.

FORMULAS

1	$R_T = \dfrac{1}{\dfrac{1}{R_1} + \dfrac{1}{R_2} + \dfrac{1}{R_3} + \cdots + \dfrac{1}{R_n}}$	Total parallel resistance
2	$R_T = \dfrac{R_1 R_2}{R_1 + R_2}$	Special case for two resistors in parallel
3	$R_T = \dfrac{R}{n}$	Special case for n equal-value resistors in parallel
4	$I_{IN(1)} + I_{IN(2)} + I_{IN(3)} + \cdots + I_{IN(n)} = I_{OUT(1)} + I_{OUT(2)} + I_{OUT(3)} + \cdots + I_{OUT(m)}$	Kirchhoff's current law
5	$I_x = \left(\dfrac{R_T}{R_x}\right) I_T$	General current-divider formula
6	$I_1 = \left(\dfrac{R_2}{R_1 + R_2}\right) I_T$	Two-branch current-divider formula
7	$I_2 = \left(\dfrac{R_1}{R_1 + R_2}\right) I_T$	Two-branch current-divider formula
8	$P_T = P_1 + P_2 + P_3 + \cdots + P_n$	Total power

www.EngineeringBooksPdf.com

TRUE/FALSE QUIZ

Answers are at the end of the chapter.

1. To find the total conductance of parallel resistors, you can add the conductance of each of the resistors.
2. The total resistance of parallel resistors is always smaller than the smallest resistor.
3. The product-over-sum rule works for any number of parallel resistors.
4. In a parallel circuit, the voltage is larger on a larger resistor and smaller on a smaller resistor.
5. When a new path is added to a parallel circuit, the total resistance goes up.
6. When a new path is added to a parallel circuit, the total current goes up.
7. The total current entering a node is always equal to the total current leaving the node.
8. In the current-divider formula, $I_x = (R_T/R_x)I_T$, the quantity in parentheses is a fraction that is never greater than 1.
9. When two resistors are in parallel, the smaller resistor will have the smaller power dissipation.
10. The total power dissipated by parallel resistors can be larger than the power supplied by the source.

SELF-TEST

Answers are at the end of the chapter.

1. In a parallel circuit, each resistor has
   (a) the same current **(b)** the same voltage
   (c) the same power **(d)** all of the above
2. When a 1.2 kΩ resistor and a 100 Ω resistor are connected in parallel, the total resistance is
   (a) greater than 1.2 kΩ **(b)** greater than 100 Ω but less than 1.2 kΩ
   (c) less than 100 Ω but greater than 90 Ω **(d)** less than 90 Ω
3. A 330 Ω resistor, a 270 Ω resistor, and a 68 Ω resistor are all in parallel. The total resistance is approximately
   (a) 668 Ω **(b)** 47 Ω **(c)** 68 Ω **(d)** 22 Ω
4. Eight resistors are in parallel. The two lowest-value resistors are both 1.0 kΩ. The total resistance
   (a) cannot be determined **(b)** is greater than 1.0 kΩ
   (c) is less than 1.0 kΩ **(d)** is less than 500 Ω
5. When an additional resistor is connected across an existing parallel circuit, the total resistance
   (a) decreases **(b)** increases
   (c) remains the same **(d)** increases by the value of the added resistor
6. If one of the resistors in a parallel circuit is removed, the total resistance
   (a) decreases by the value of the removed resistor **(b)** remains the same
   (c) increases **(d)** doubles
7. The currents into a node are along two paths. One current is 5 A and the other is 3 A. The total current out of the node is
   (a) 2 A **(b)** unknown **(c)** 8 A **(d)** the larger of the two
8. The following resistors are in parallel across a voltage source: 390 Ω, 560 Ω, and 820 Ω. The resistor with the least current is
   (a) 390 Ω **(b)** 560 Ω
   (c) 820 Ω **(d)** impossible to determine without knowing the voltage
9. A sudden decrease in the total current into a parallel circuit may indicate
   (a) a short **(b)** an open resistor
   (c) a drop in source voltage **(d)** either (b) or (c)
10. In a four-branch parallel circuit, there are 10 mA of current in each branch. If one of the branches opens, the current in each of the other three branches is
   (a) 13.33 mA **(b)** 10 mA **(c)** 0 A **(d)** 30 mA

www.EngineeringBooksPdf.com

11. In a certain three-branch parallel circuit, R_1 has 10 mA through it, R_2 has 15 mA through it, and R_3 has 20 mA through it. After measuring a total current of 35 mA, you can say that

(a) R_1 is open **(b)** R_2 is open

(c) R_3 is open **(d)** the circuit is operating properly

12. If there are a total of 100 mA into a parallel circuit consisting of three branches and two of the branch currents are 40 mA and 20 mA, the third branch current is

(a) 60 mA **(b)** 20 mA **(c)** 160 mA **(d)** 40 mA

13. A complete short develops across one of five parallel resistors on a PC board. The most likely result is

(a) the smallest-value resistor will burn out

(b) one or more of the other resistors will burn out

(c) the fuse in the power supply will blow

(d) the resistance values will be altered

14. The power dissipation in each of four parallel branches is 1 mW. The total power dissipation is

(a) 1 mW **(b)** 4 mW **(c)** 0.25 mW **(d)** 16 mW

TROUBLESHOOTING: SYMPTOM AND CAUSE

The purpose of these exercises is to help develop thought processes essential to troubleshooting. Answers are at the end of the chapter.

Determine the cause for each set of symptoms. Refer to Figure 56.

▶ **FIGURE 56**

The meters indicate the correct readings for this circuit.

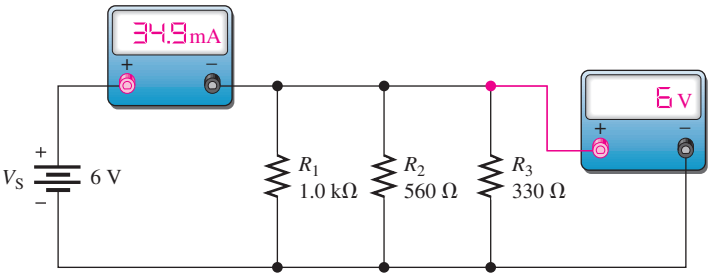

1. *Symptom:* The ammeter and voltmeter readings are zero.

Cause:

(a) R_1 is open.

(b) The voltage source is turned off or faulty.

(c) R_3 is open.

2. *Symptom:* The ammeter reading is 16.7 mA, and the voltmeter reading is 6 V.

Cause:

(a) R_1 is open.

(b) R_2 is open.

(c) R_3 is open.

3. *Symptom:* The ammeter reading is 28.9 mA, and the voltmeter reading is 6 V.

Cause:

(a) R_1 is open.

(b) R_2 is open.

(c) R_3 is open.

www.EngineeringBooksPdf.com

4. *Symptom:* The ammeter reading is 24.2 mA, and the voltmeter reading is 6 V.
   Cause:
   (a) R_1 is open.
   (b) R_2 is open.
   (c) R_3 is open.
5. *Symptom:* The ammeter reading is 34.9 mA, and the voltmeter reading is 0 V.
   Cause:
   (a) A resistor is shorted.
   (b) The voltmeter is faulty.
   (c) The voltage source is turned off or faulty.

PROBLEMS

Answers to odd-numbered problems are at the end of the chapter.

BASIC PROBLEMS

SECTION 1 Resistors in Parallel

1. Connect the resistors in Figure 57 in parallel across the battery.
2. Determine whether or not all the resistors in Figure 58 are connected in parallel on the printed circuit board. Draw the schematic including resistor values.

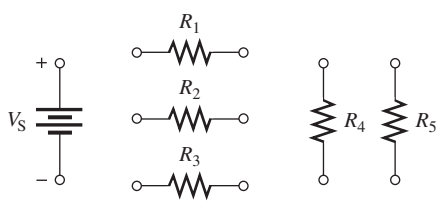

▲ FIGURE 57

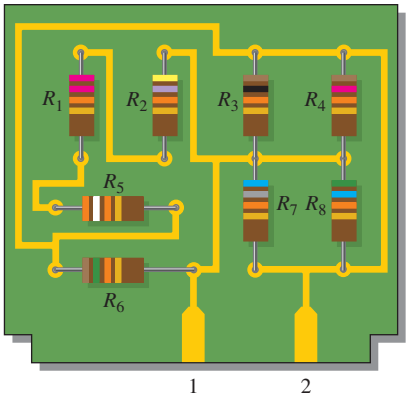

▲ FIGURE 58

SECTION 2 Total Parallel Resistance

3. Determine the total resistance between pins 1 and 2 in Figure 58.
4. The following resistors are connected in parallel: 1.0 MΩ, 2.2 MΩ, 4.7 MΩ, 12 MΩ, and 22 MΩ. Determine the total resistance.
5. Find the total resistance between nodes *A* and *B* for each group of parallel resistors in Figure 59.

▶ FIGURE 59

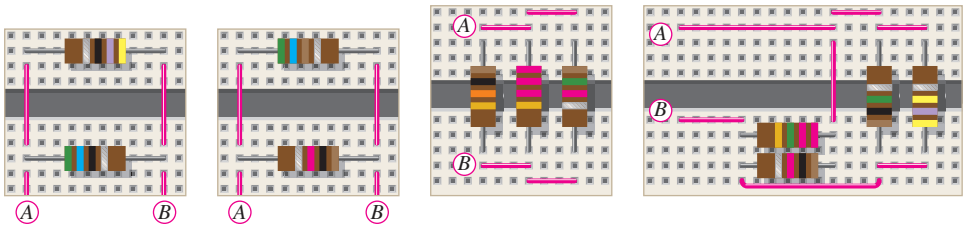

www.EngineeringBooksPdf.com

6. Calculate R_T for each circuit in Figure 60.

▶ FIGURE 60

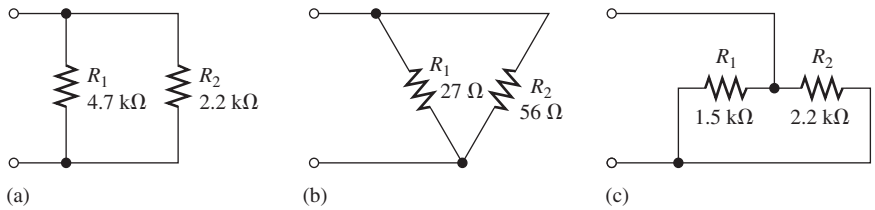

7. What is the total resistance of eleven 22 kΩ resistors in parallel?

8. Five 15 Ω, ten 100 Ω, and two 10 Ω resistors are all connected in parallel. What is the total resistance?

SECTION 3 Voltage in a Parallel Circuit

9. Determine the voltage across and the current through each parallel resistor if the total voltage is 12 V and the total resistance is 600 Ω. There are four resistors, all of equal value.

10. The source voltage in Figure 61 is 100 V. How much voltage does each of the three meters read?

▶ FIGURE 61

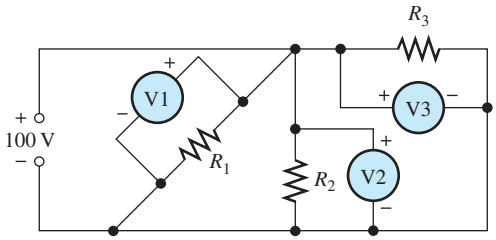

SECTION 4 Application of Ohm's Law

11. What is the total current, I_T, in each circuit of Figure 62?

▶ FIGURE 62

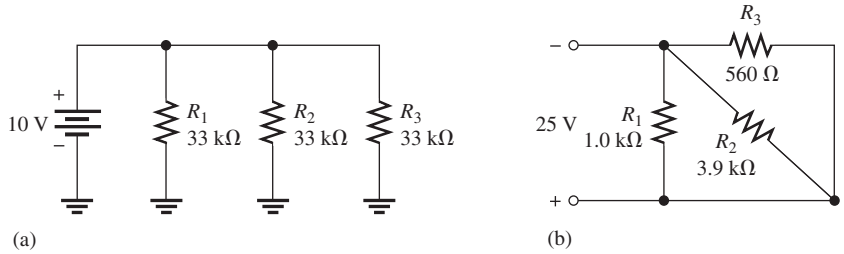

12. The resistance of a 60 W bulb is approximately 240 Ω. What is the current from the source when three bulbs are on in a 120 V parallel circuit?

13. What is the current in each resistor for the circuits shown in Figure 63?

▶ FIGURE 63

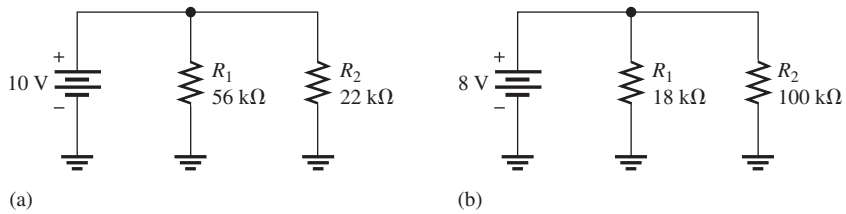

14. Four equal-value resistors are connected in parallel. Five volts are applied across the parallel circuit, and 2.5 mA are measured from the source. What is the value of each resistor?

www.EngineeringBooksPdf.com

SECTION 5 Kirchhoff's Current Law

15. The following currents are measured in the same direction in a three-branch parallel circuit: 250 mA, 300 mA, and 800 mA. What is the value of the current into the node to which these three branches are connected?

16. There is a total of 500 mA of current into five parallel resistors. The currents through four of the resistors are 50 mA, 150 mA, 25 mA, and 100 mA. What is the current through the fifth resistor?

17. How much current is through R_2 and R_3 in Figure 64 if R_2 and R_3 have the same resistance? Show how to connect ammeters to measure these currents.

▶ FIGURE 64

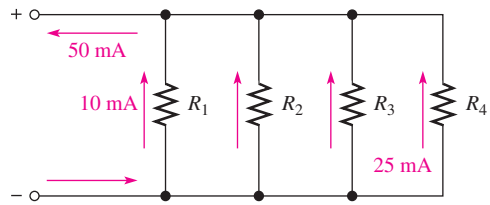

18. A trailer has four running lights that draw 0.5 A each and two taillights that draw 1.2 A each. What is the current supplied to the trailer when the taillights and running lights are on?

19. Assume the trailer in Problem 18 has two brake lights that draw 1 A each.

(a) When all lights are on, what current is supplied to the trailer?

(b) For this condition, what is the ground return current from the trailer?

SECTION 6 Current Dividers

20. A 10 kΩ resistor and a 15 kΩ resistor are in parallel with a voltage source. Which resistor has the highest current?

21. How much branch current should each meter in Figure 65 indicate?

▶ FIGURE 65

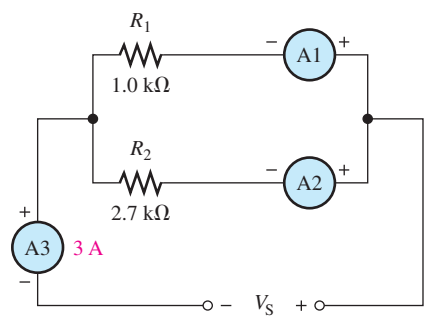

22. Using the current-divider formula, determine the current in each branch of the circuits of Figure 66.

▶ FIGURE 66

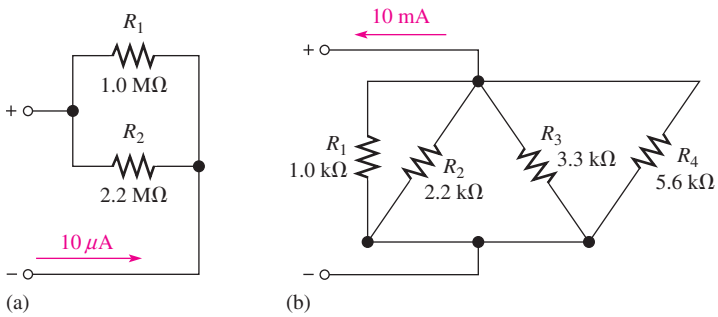

www.EngineeringBooksPdf.com

SECTION 7 Power in Parallel Circuits

23. Five parallel resistors each handle 40 mW. What is the total power?

24. Determine the total power in each circuit of Figure 66.

25. Six light bulbs are connected in parallel across 120 V. Each bulb is rated at 75 W. How much current is through each bulb, and what is the total current?

SECTION 8 Troubleshooting

26. If one of the bulbs burns out in Problem 25, how much current will be through each of the remaining bulbs? What will be the total current?

27. In Figure 67, the current and voltage measurements are indicated. Has a resistor opened, and, if so, which one?

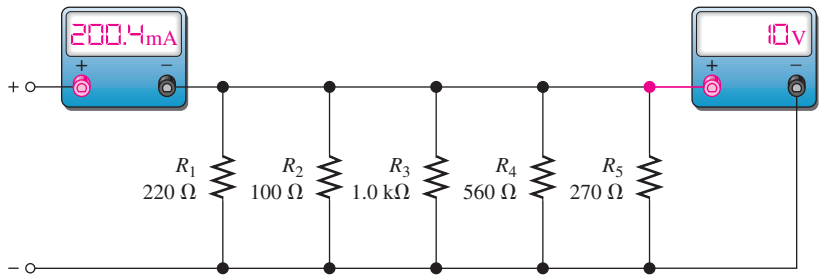

▲ FIGURE 67

28. What is wrong with the circuit in Figure 68?

▶ FIGURE 68

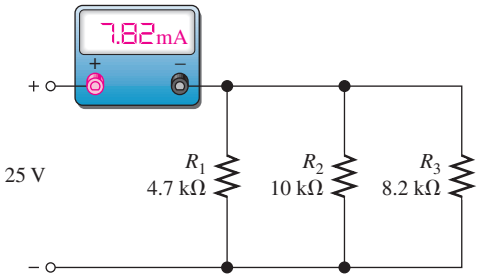

29. Find the open resistor in Figure 69.

▶ FIGURE 69

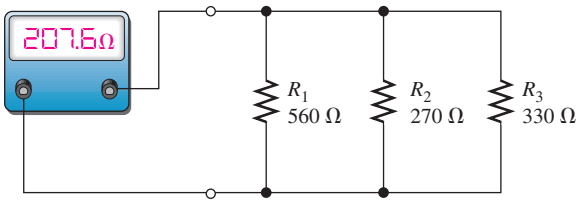

www.EngineeringBooksPdf.com

30. From the ohmmeter reading in Figure 70, can you tell if a resistor is open? If so, can you identify it?

▶ FIGURE 70

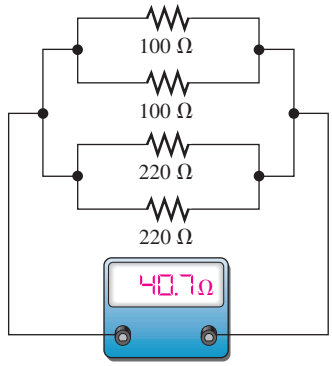

ADVANCED PROBLEMS

31. In the circuit of Figure 71, determine resistances R_2, R_3, and R_4.

32. The total resistance of a parallel circuit is 25 Ω. If the total current is 100 mA, how much current is through a 220 Ω resistor that makes up part of the parallel circuit?

33. What is the current through each resistor in Figure 72? R is the lowest-value resistor, and all others are multiples of that value as indicated.

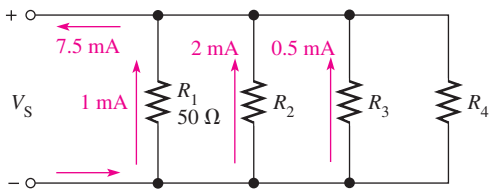

▲ FIGURE 71

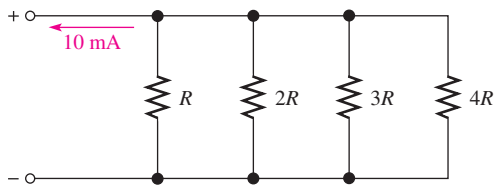

▲ FIGURE 72

34. A certain parallel circuit consists of only ½ W resistors each having the same resistance. The total resistance is 1 kΩ, and the total current is 50 mA. If each resistor is operating at one-half its maximum power level, determine the following:

(a) the number of resistors **(b)** the value of each resistor

(c) the current in each branch **(d)** the applied voltage

35. Find the values of the unspecified quantities (shown in color) in each circuit of Figure 73.

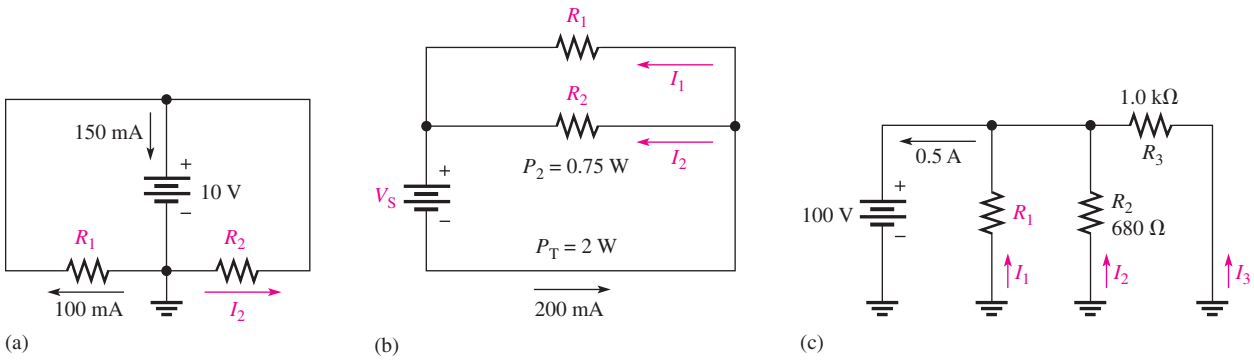

▲ FIGURE 73

www.EngineeringBooksPdf.com

36. What is the total resistance between terminal *A* and ground in Figure 74 for the following conditions?

(a) SW1 and SW2 open **(b)** SW1 closed, SW2 open

(c) SW1 open, SW2 closed **(d)** SW1 and SW2 closed

▶ FIGURE 74

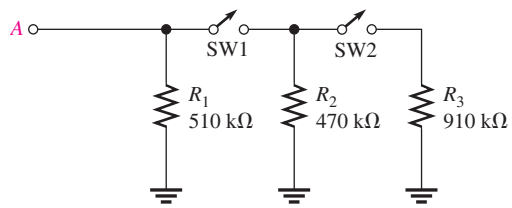

37. What value of R_2 in Figure 75 will cause excessive current?

▶ FIGURE 75

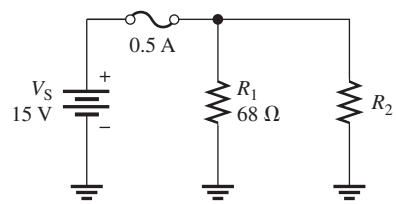

38. Determine the total current from the source and the current through each resistor for each switch position in Figure 76.

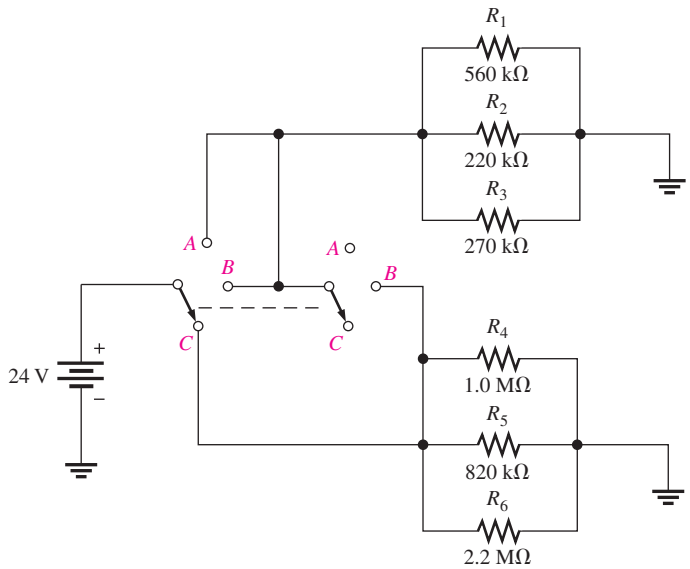

▲ FIGURE 76

39. The electrical circuit in a room is protected with a 15 A circuit breaker. A space heater that draws 8.0 A is plugged into one wall outlet, and two table lamps that draw 0.833 A each are plugged into another outlet. Can a vacuum cleaner that uses 5.0 A be plugged into this same circuit without exceeding the breaker current? Explain your answer.

40. The total resistance of a parallel circuit is 25 Ω. What is the current through a 220 Ω resistor that makes up part of the parallel circuit if the total current is 100 mA?

www.EngineeringBooksPdf.com

41. Identify which groups of resistors are in parallel on the double-sided PC board in Figure 77. Determine the total resistance of each group.

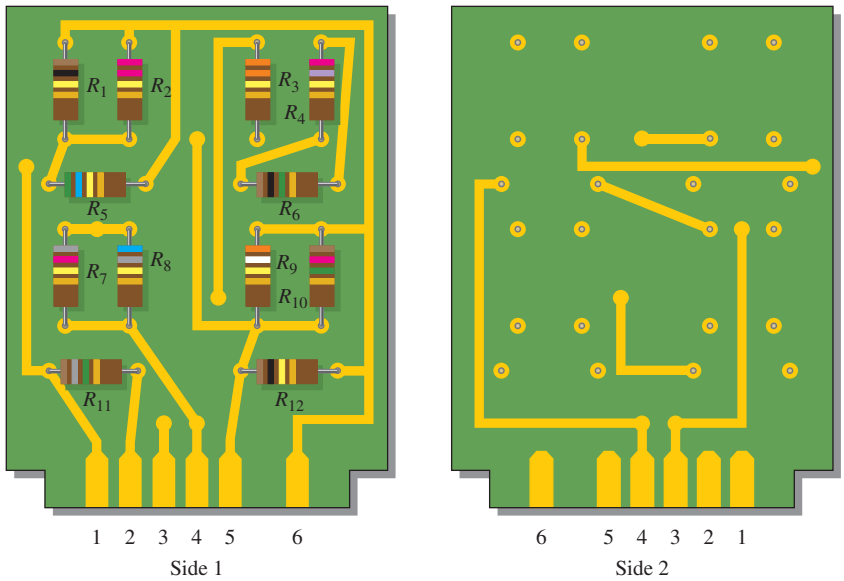

▲ FIGURE 77

42. If the total resistance in Figure 78 is 200 Ω, what is the value of R_2?

▶ FIGURE 78

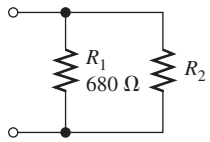

43. Determine the unknown resistances in Figure 79.

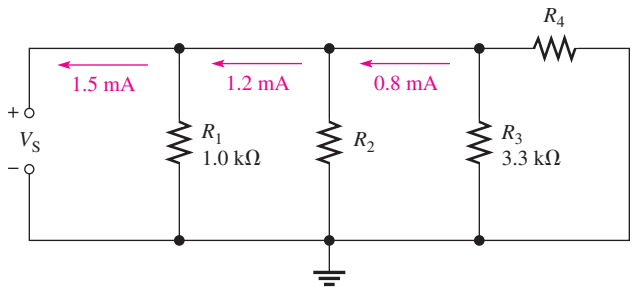

▲ FIGURE 79

44. There is a total of 250 mA into a parallel circuit with a total resistance of 1.5 kΩ. The current must be increased by 25%. Determine how much resistance to add in parallel to accomplish this increase in current.

www.EngineeringBooksPdf.com

45. Draw the schematic for the setup in Figure 80 and determine what is wrong with the circuit if 25 V are applied across the red and black leads.

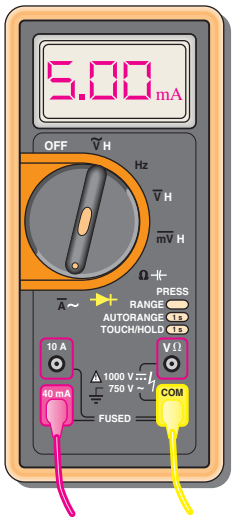

(a) Meter with yellow lead going to protoboard and red lead going to the positive terminal of the 25 V power supply.

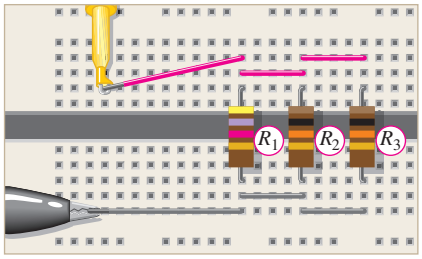

(b) Protoboard with leads connected. Yellow lead is from meter and gray lead is from 25 V power supply ground. The red meter lead goes to +25 V.

▲ **FIGURE 80**

46. Develop a test procedure to check the circuit in Figure 81 to make sure that there are no open components. You must do this test without removing any component from the board. List the procedure in a detailed step-by-step format.

▶ **FIGURE 81**

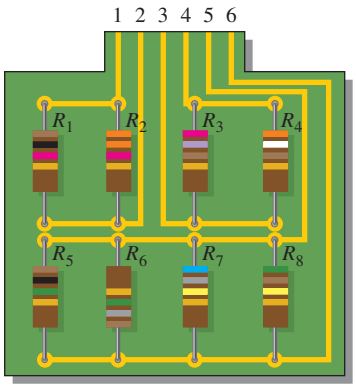

47. A certain parallel circuit consists of five ½ W resistors with the following values: 1.8 kΩ, 2.2 kΩ, 3.3 kΩ, 3.9 kΩ and 4.7 kΩ. As you slowly increase the voltage across the parallel circuit, the total current slowly increases. Suddenly, the total current drops to a lower value.

(a) Excluding a power supply failure, what happened?

(b) What is the maximum voltage you should have applied?

(c) Specifically, what must be done to repair the fault?

48. For the circuit board shown in Figure 82, determine the resistance between the following pins if there is a short between pins 2 and 4.

(a) pins 1 and 2 **(b)** pins 2 and 3 **(c)** pins 3 and 4 **(d)** pins 1 and 4

www.EngineeringBooksPdf.com

▶ FIGURE 82

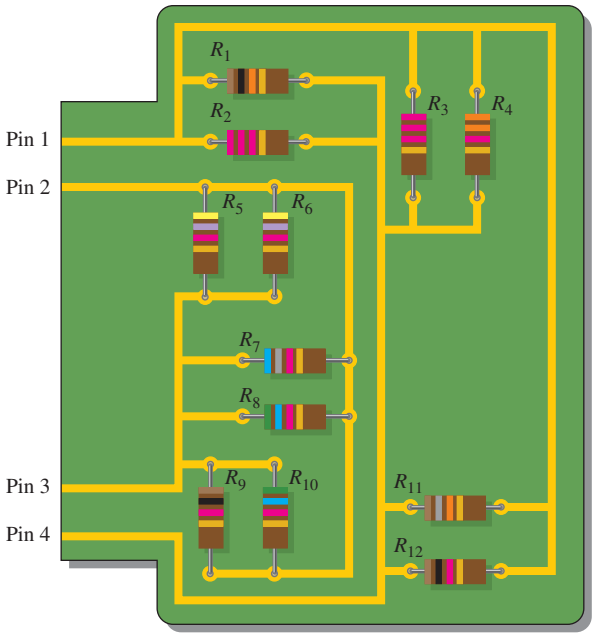

49. For the circuit board shown in Figure 82, determine the resistance between the following pins if there is a short between pins 3 and 4.

(a) pins 1 and 2 **(b)** pins 2 and 3 **(c)** pins 2 and 4 **(d)** pins 1 and 4

MULTISIM TROUBLESHOOTING PROBLEMS

50. Open file P05-50; files are found at www.pearsonhighered.com/floyd/. Using current measurements, determine if there is a fault in the circuit. If so, identify the fault.

51. Open file P05-51. Using current measurements, determine if there is a fault in the circuit. If so, identify the fault.

52. Open file P05-52. Using resistance measurements, determine if there is a fault in the circuit. If so, identify the fault.

53. Open file P05-53. Measure the total resistance of each circuit and compare to the calculated values.

ANSWERS

SECTION CHECKUPS

SECTION 1 Resistors in Parallel

1. Parallel resistors are connected between the same two points.

2. A parallel circuit has more than one current path between two given points.

3. See Figure 83.

▶ FIGURE 83

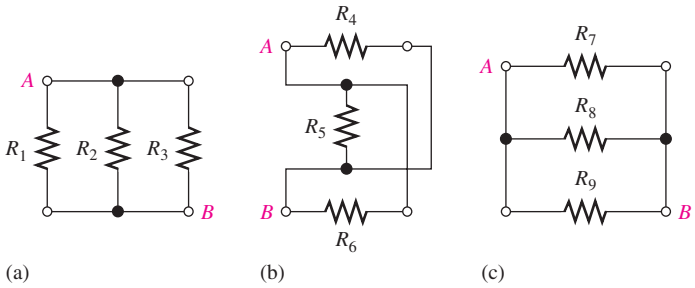

www.EngineeringBooksPdf.com

4. See Figure 84.

▶ FIGURE 84

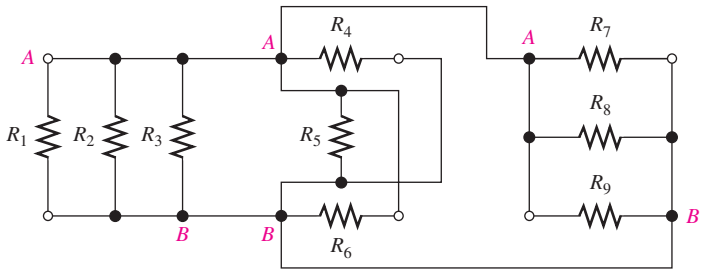

SECTION 2 Total Parallel Resistance

1. As more resistors are connected in parallel, the total resistance decreases.
2. R_T is always less than the smallest resistance value.
3. $R_T = 2.2\ \text{k}\Omega/12 = 183\ \Omega$

SECTION 3 Voltage in a Parallel Circuit

1. 5 V
2. $V_{R2} = 118$ V; $V_S = 118$ V
3. $V_{R1} = 50$ V; $V_{R2} = 50$ V
4. Voltage is the same across all parallel branches.

SECTION 4 Application Ohm's Law

1. $I_T = 12\ \text{V}/(680\ \Omega/3) = 53$ mA
2. $V_S = 20\ \text{mA}(680\ \Omega \parallel 330\ \Omega) = 4.44$ V
3. $I_1 = 4.44\ \text{V}/680\ \Omega = 6.53$ mA; $I_2 = 4.44\ \text{V}/330\ \Omega = 13.5$ mA
4. $R_T = 4(12\ \text{V}/6\ \text{mA}) = 8\ \text{k}\Omega$
5. $V = (1.0\ \text{k}\Omega \parallel 2.2\ \text{k}\Omega)100\ \text{mA} = 68.8$ V

SECTION 5 Kirchhoff's Current Law

1. Kirchhoff's current law: The algebraic sum of all currents at a node is zero; The sum of the currents entering a node equals the sum of all the currents leaving that node.
2. $I_1 + I_2 + I_3 = 2.5$ A
3. 100 mA + 300 mA = 400 mA
4. 4 A
5. 10 A

SECTION 6 Current Dividers

1. The 22 Ω has most current; the 220 Ω has least current.
2. $I_3 = (R_T/R_3)4\ \text{mA} = (113.6\ \Omega/470\ \Omega)4\ \text{mA} = 967\ \mu\text{A}$
3. $I_2 = (R_T/680\ \Omega)10\ \text{mA} = 3.27$ mA; $I_1 = (R_T/330\ \Omega)10\ \text{mA} = 6.73$ mA

SECTION 7 Power in Parallel Circuits

1. Add the powers in each resistor to get P_T.
2. $P_T = 1\ \text{W} + 2\ \text{W} + 5\ \text{W} + 8\ \text{W} = 16$ W
3. $P_T = (1\ \text{mA})^2 R_T = 615\ \mu\text{W}$
4. The normal current is $I = P/V = 100\ \text{W}/12.6\ \text{V} = 7.9$ A. Choose a 10 A fuse.

SECTION 8 Troubleshooting

1. When a parallel branch opens, there is no change in voltage and the total current decreases.
2. When the total resistance is greater than it should be, a branch is open.

www.EngineeringBooksPdf.com

3. Yes, all other bulbs continue to glow.
4. The current in each nonopen branch remains 1 A.
5. By Kirchhoff's current law, the ground return current is 0.10 A and represents a parallel return path. From Ohm's law, $R = 120\ \text{V}/0.1\ \text{A} = 1200\ \Omega$.

RELATED PROBLEMS FOR EXAMPLES

1 No rewiring is necessary.

2 Connect pin 1 to pin 2 and pin 3 to pin 4.

3 9.34 Ω

4 Replace Step 9 with "Press the + key."
Display shows $100^{-1} + 47^{-1} + 22^{-1} +$.
Replace Step 10 with "Enter 33."
Display shows $100^{-1} + 47^{-1} + 22^{-1} + 33$.
Step 11: Press the x^{-1} key.
Display shows $100^{-1} + 47^{-1} + 22^{-1} + 33^{-1}$.
Step 12: Press the ENTER key. Display shows $107.034171502\text{E}^{-3}$.
Step 13: Press the x^{-1} and ENTER keys. Display shows 9.34281067406E0.

5 132 Ω

6 33.3 kΩ

7 25 V

8 $I_1 = 100$ mA; $I_2 = 179$ mA; 100 mA + 179 mA = 279 mA

9 $I_1 = 20.0$ mA; $I_2 = 9.09$ mA; $I_3 = 35.7$ mA; $I_4 = 22.0$ mA

10 31.9 mA

11 2.0 Ω

12 $I = V/R_{\text{TAIL}} = 12.6\ \text{V}/10.5\ \Omega = 1.2\ \text{A}$

13 20 mA

14 $I_T = 112$ mA; $I_2 = 50$ mA

15 2.5 mA; 5 mA

16 $I_1 = 1.63$ mA; $I_2 = 3.35$ mA

17 $I_1 = 59.4$ mA; $I_2 = 40.6$ mA

18 1.78 W

19 81 W

20 15.4 mA

21 Not correct; R_{10} (68 kΩ) is open.

TRUE/FALSE QUIZ

1. T **2.** T **3.** F **4.** F **5.** F **6.** T **7.** T **8.** T **9.** F **10.** F

SELF-TEST

1. (b) **2.** (c) **3.** (b) **4.** (d) **5.** (a) **6.** (c) **7.** (c)
8. (c) **9.** (d) **10.** (b) **11.** (a) **12.** (d) **13.** (c) **14.** (b)

TROUBLESHOOTING: SYMPTOM AND CAUSE

1. (b)
2. (c)
3. (a)
4. (b)
5. (b)

www.EngineeringBooksPdf.com

PROBLEMS – ODD-NUMBERED ANSWERS

1. See Figure P–5.

▶ FIGURE P–5

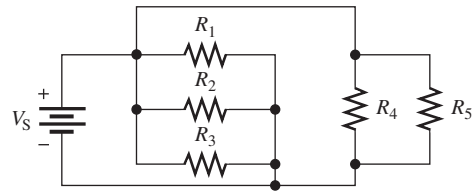

3. 3.43 kΩ

5. **(a)** 25.6 Ω **(b)** 359 Ω **(c)** 819 Ω **(d)** 996 Ω

7. 2 kΩ

9. 12 V; 5 mA

11. **(a)** 909 μA **(b)** 76 mA

13. **(a)** $I_1 = 179\ \mu A; I_2 = 455\ \mu A$ **(b)** $I_1 = 444\ \mu A; I_2 = 80\ \mu A$

15. 1350 mA

17. $I_2 = I_3 = 7.5$ mA. Connect an ammeter in series with each resistor in each branch.

19. 6.4 A; 6.4 A

21. $I_1 = 2.19$ A; $I_2 = 811$ mA

23. 200 mW

25. 0.625 A; 3.75 A

27. The 1.0 kΩ resistor is open.

29. R_2 is open.

31. $R_2 = 25\ \Omega; R_3 = 100\ \Omega; R_4 = 12.5\ \Omega$

33. $I_R = 4.8$ A; $I_{2R} = 2.4$ A; $I_{3R} = 1.6$ A; $I_{4R} = 1.2$ A

35. **(a)** $R_1 = 100\ \Omega, R_2 = 200\ \Omega, I_2 = 50$ mA

(b) $I_1 = 125$ mA, $I_2 = 74.9$ mA, $R_1 = 80\ \Omega, R_2 = 134\ \Omega,\ V_S = 10$ V

(c) $I_1 = 253$ mA, $I_2 = 147$ mA, $I_3 = 100$ mA, $R_1 = 395\ \Omega$

37. 53.7 Ω

39. Yes; total current = 14.7 A

41. $R_1 \| R_2 \| R_5 \| R_9 \| R_{10} \| R_{12} = 100\ k\Omega \| 220\ k\Omega \| 560\ k\Omega \| 390\ k\Omega \| 1.2\ M\Omega \| 100\ k\Omega = 33.6\ k\Omega$

$R_4 \| R_6 \| R_7 \| R_8 = 270\ k\Omega \| 1.0\ M\Omega \| 820\ k\Omega \| 680\ k\Omega = 135.2\ k\Omega$

$R_3 \| R_{11} = 330\ k\Omega \| 1.8\ M\Omega = 278.9\ k\Omega$

43. $R_2 = 750\ \Omega; R_4 = 423\ \Omega$

45. The 4.7 kΩ resistor is open.

47. **(a)** One of the resistors has opened due to excessive power dissipation.

(b) 30 V

(c) Replace the 1.8 kΩ resistor.

49. **(a)** 940 Ω **(b)** 518 Ω

(c) 518 Ω **(d)** 422 Ω

51. R_3 is open.

53. **(a)** R from pin 1 to pin 4 agrees with calculated value.

(b) R from pin 2 to pin 3 agrees with calculated value.

PHOTO CREDITS FOR REOCCURRING IMAGES

CD Icon: Stockbyte/Getty Images; **Computer Chips:** Photodisc/Thinkstock; **Computer:** Jeff Maloney/Photodisc/Getty Images; **Fiber Optic:** discpicture/Shutterstock.

www.EngineeringBooksPdf.com

This page intentionally left blank

www.EngineeringBooksPdf.com

Series-Parallel Circuits

CHAPTER OUTLINE

1 Identifying Series-Parallel Relationships
2 Analysis of Series-Parallel Resistive Circuits
3 Voltage Dividers with Resistive Loads
4 Loading Effect of a Voltmeter
5 The Wheatstone Bridge
6 Thevenin's Theorem
7 The Maximum Power Transfer Theorem
8 The Superposition Theorem
9 Troubleshooting
Application Assignment: Putting Your Knowledge to Work

CHAPTER OBJECTIVES

- Identify series-parallel relationships
- Analyze series-parallel circuits
- Analyze loaded voltage dividers
- Determine the loading effect of a voltmeter on a circuit
- Analyze and apply a Wheatstone bridge
- Apply Thevenin's theorem to simplify a circuit for analysis
- Apply the maximum power transfer theorem
- Apply the superposition theorem to circuit analysis
- Troubleshoot series-parallel circuits

KEY TERMS

- Loading
- Load current
- Bleeder current
- Wheatstone bridge
- Balanced bridge
- Unbalanced bridge
- Thevenin's theorem
- Terminal equivalency
- Maximum power transfer
- Superposition

APPLICATION ASSIGNMENT PREVIEW

Your application assignment in this chapter is to evaluate a voltage-divider circuit board used in a portable power supply by applying your knowledge of loaded voltage dividers gained in this chapter. The voltage divider in this application is designed to provide reference voltages to three different instruments that act as loads on the circuit. You will also troubleshoot the circuit board for various common faults. After studying this chapter, you should be able to complete the application assignment.

VISIT THE COMPANION WEBSITE

Study aids for this chapter are available at http://www.pearsonhighered.com/floyd/

INTRODUCTION

Various combinations of both series and parallel resistors are often found in electronic circuits. In this chapter, examples of such series-parallel arrangements are examined and analyzed. An important circuit called the *Wheatstone bridge* is introduced, and you will learn how complex circuits can be simplified using Thevenin's theorem. The maximum power transfer theorem, used in applications where it is important for a given circuit to provide maximum power to a load, is discussed. Also, circuits with more than one voltage source are analyzed in simple steps using the superposition theorem. Troubleshooting series-parallel circuits for shorts and opens is also covered.

Streeter Photography/Alamy

From Chapter 6 of *Electronics Fundamentals: Circuits, Devices, and Applications*, Eighth Edition, Thomas L. Floyd, David M. Buchla. Copyright © 2010 by Pearson Education, Inc. Published by Pearson Prentice Hall. All rights reserved.

www.EngineeringBooksPdf.com

1 IDENTIFYING SERIES-PARALLEL RELATIONSHIPS

A series-parallel circuit consists of combinations of both series and parallel current paths. It is important to be able to identify how the components in a circuit are arranged in terms of their series and parallel relationships.

After completing this section, you should be able to

- **Identify series-parallel relationships**
  - Recognize how each resistor in a given circuit is related to the other resistors
  - Determine series and parallel relationships on a PC board

Figure 1(a) shows an example of a simple series-parallel combination of resistors. Notice that the resistance from A to B is R_1. The resistance from B to C is R_2 and R_3 in parallel ($R_2 \parallel R_3$) because these resistors are connected to the same pair of nodes (node B and node C). The total resistance from A to C is R_1 in series with the parallel combination of R_2 and R_3, as indicated in Figure 1(b).

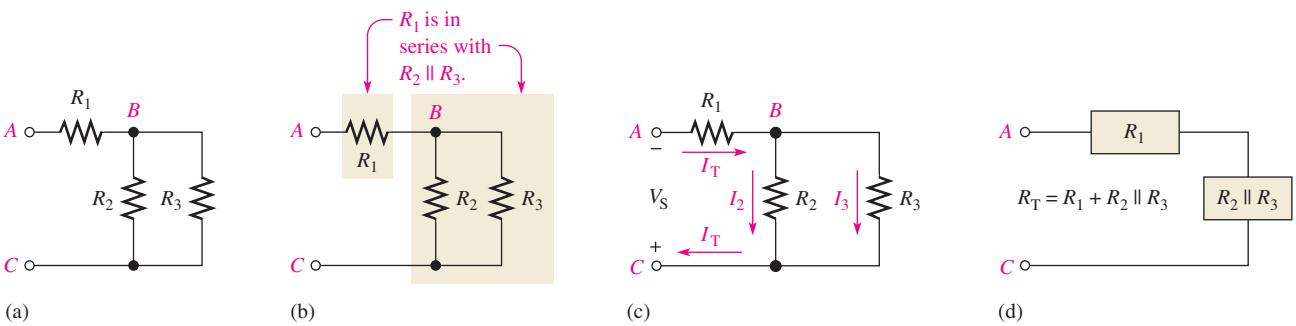

▲ **FIGURE 1**

A simple series-parallel resistive circuit.

When the circuit in Figure 1 is connected to a voltage source as shown in part (c) the total current through R_1 divides at point B into the two parallel paths. These two branch currents then recombine. The total current is into the positive source terminal as shown. The resistor relationships are shown in block form in part (d).

Now, to further illustrate series-parallel relationships, let's increase the complexity of the circuit in Figure 1(a) step-by-step.

1. In Figure 2(a), R_4 is connected in series with R_1. The resistance between points A and B is now $R_1 + R_4$. This series combination is in series with the parallel combination of R_2 and R_3, as illustrated in Figure 2(b). Part (c) shows the resistor relationships in block form.
2. In Figure 3(a), R_5 is connected in series with R_2. The series combination of R_2 and R_5 is in parallel with R_3. This entire series-parallel combination is in series with the $R_1 + R_4$ combination, as illustrated in Figure 3(b). The block diagram is shown in part (c).
3. In Figure 4(a), R_6 is connected in parallel with the series combination of R_1 and R_4. The series-parallel combination of R_1, R_4, and R_6 is in series with the series-parallel combination of R_2, R_3, and R_5, as indicated in Figure 4(b). The block diagram is shown in part (c).

This icon indicates selected websites for further information on topics in this section. See the Companion Website provided with this text.

www.EngineeringBooksPdf.com

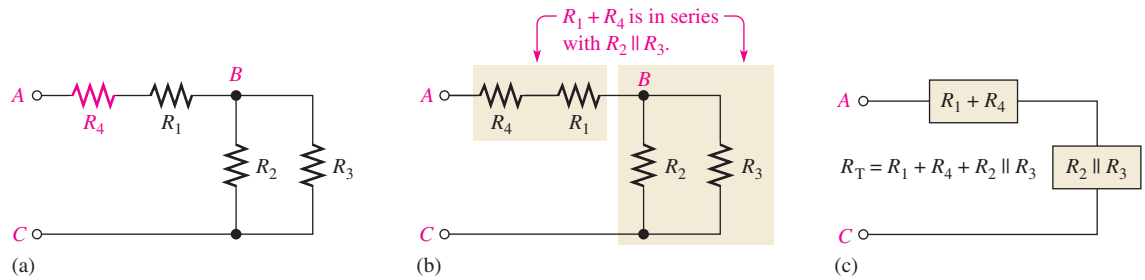

▲ **FIGURE 2**

R_4 is added to the circuit in series with R_1.

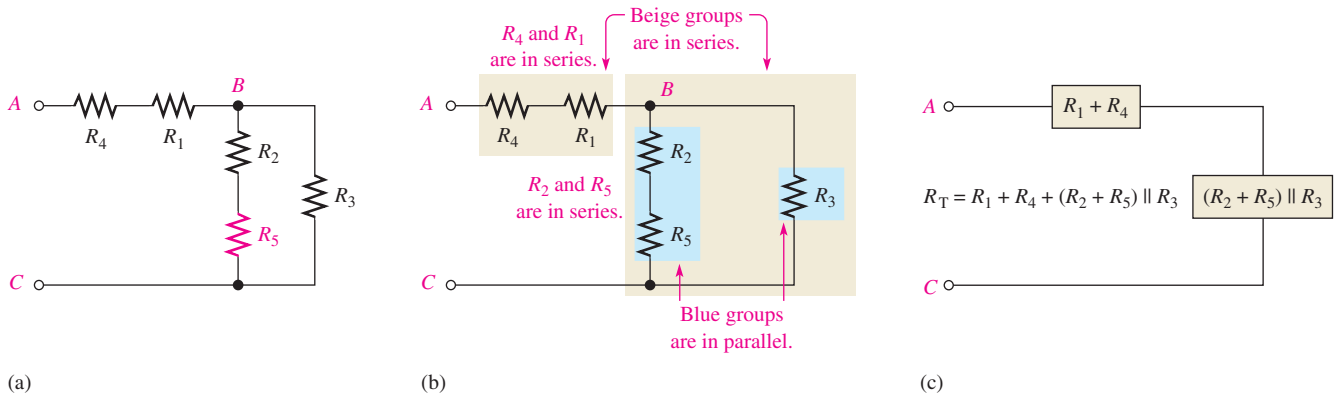

▲ **FIGURE 3**

R_5 is added to the circuit in series with R_2.

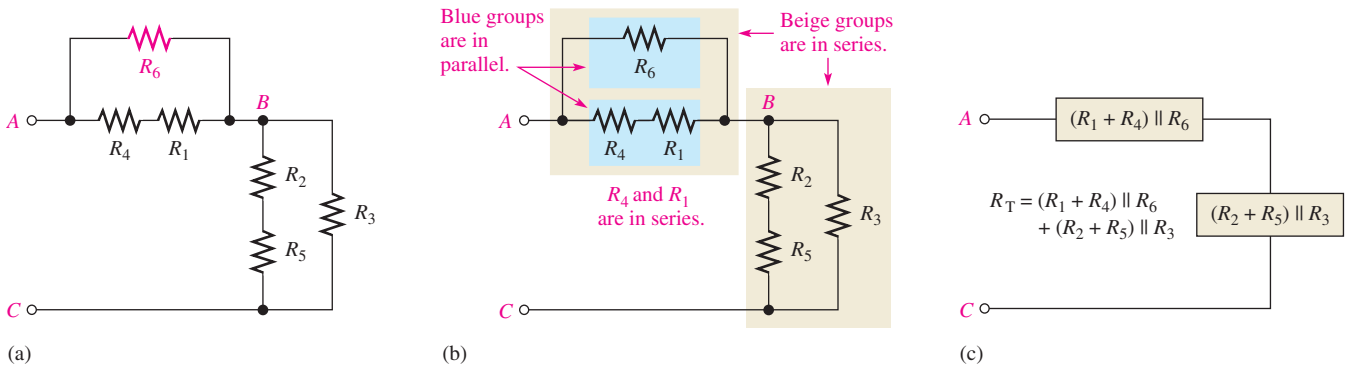

▲ **FIGURE 4**

R_6 is added to the circuit in parallel with the series combination of R_1 and R_4.

EXAMPLE 1 Identify the series-parallel relationships in Figure 5.

Solution Starting at the negative terminal of the source, follow the current paths.

1. All the current produced by the source must go through R_1, which is in series with the rest of the circuit.
2. The total current takes two paths when it gets to node A. Part of it is through R_2, and part of it is through R_3.

www.EngineeringBooksPdf.com

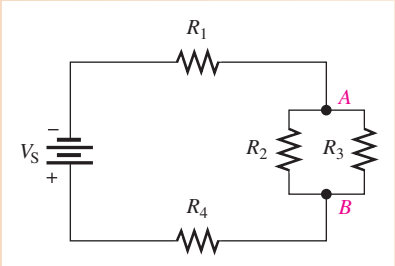

▲ FIGURE 5

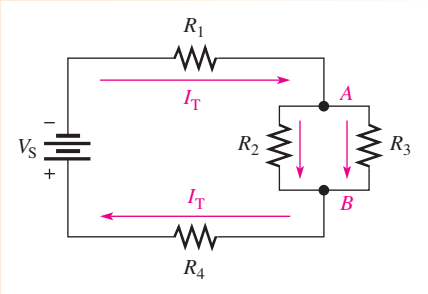

▲ FIGURE 6

3. Resistors R_2 and R_3 are in parallel with each other because they are connected to the same pair of nodes. This parallel combination is in series with R_1.
4. At node B, the currents through R_2 and R_3 come together again into a single path. Thus, the total current is through R_4.
5. Resistor R_4 is in series with both R_1 and the parallel combination of R_2 and R_3.

The currents are shown in Figure 6, where I_T is the total current. In summary, R_1 and R_4 are in series with the parallel combination of R_2 and R_3.

$$R_1 + R_4 + R_2 \parallel R_3$$

*Related Problem** If another resistor, R_5, is connected from node A to the positive side of the source in Figure 6, what is its relationship to the other resistors?

*Answers are at the end of the chapter.

EXAMPLE 2

Describe the series-parallel combination between terminals A and D in Figure 7.

▶ FIGURE 7

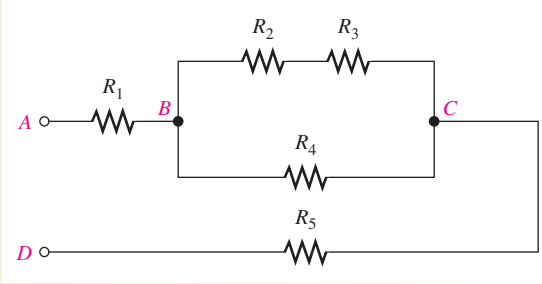

Solution Between nodes B and C, there are two parallel paths.

1. The lower path consists of R_4.
2. The upper path consists of a series combination of R_2 and R_3.

This parallel combination is in series with both R_1 and R_5. In summary, R_1 and R_5 are in series with the parallel combination of R_4 and $(R_2 + R_3)$.

$$R_1 + R_5 + R_4 \parallel (R_2 + R_3)$$

Related Problem If a resistor is connected from node C to node D in Figure 7, describe its relationship in the circuit.

www.EngineeringBooksPdf.com

EXAMPLE 3

Describe the total resistance between each pair of terminals in Figure 8.

▶ FIGURE 8

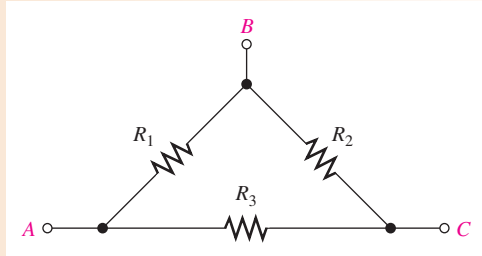

Solution

1. From A to B: R_1 is in parallel with the series combination of R_2 and R_3.
2. From A to C: R_3 is in parallel with the series combination of R_1 and R_2.
3. From B to C: R_2 is in parallel with the series combination of R_1 and R_3.

Related Problem In Figure 8, describe the total resistance between each terminal and an added ground if a new resistor, R_4, is connected from terminal C to ground. None of the existing resistors connect directly to the ground.

When connecting a circuit on a protoboard from a schematic, it is easier to check the circuit if the resistors and connections on the protoboard are oriented so that they approximately match the way the schematic is drawn. In some cases, it is difficult to see the series-parallel relationships on a schematic because of the way in which it is drawn. In such a situation, it helps to redraw the diagram so that the relationships become clear.

EXAMPLE 4

Identify the series-parallel relationships in Figure 9.

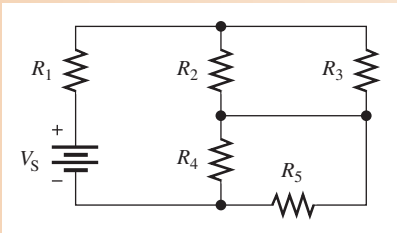

▲ FIGURE 9

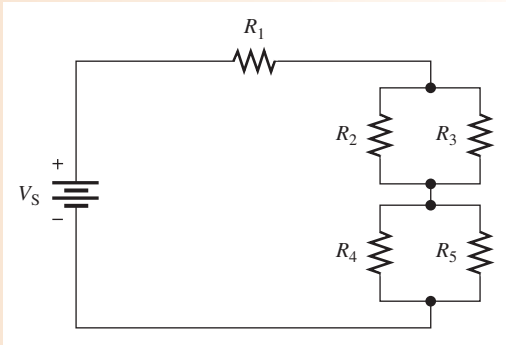

▲ FIGURE 10

Solution The circuit schematic is redrawn in Figure 10 to better illustrate the series-parallel relationships. Now you can see that R_2 and R_3 are in parallel with each other and also that R_4 and R_5 are in parallel with each other. Both parallel combinations are in series with each other and with R_1.

$$R_1 + R_2 \parallel R_3 + R_4 \parallel R_5$$

Related Problem If a resistor is connected from the bottom end of R_3 to the top end of R_5 in Figure 10, what effect does it have on the circuit? Explain.

www.EngineeringBooksPdf.com

Usually, the physical arrangement of components on a PC or protoboard bears no resemblance to the actual electrical relationships. By tracing out the circuit and rearranging the components on paper into a recognizable form, you can determine the series-parallel relationships.

EXAMPLE 5

Determine the relationships of the resistors on the PC board in Figure 11.

▶ FIGURE 11

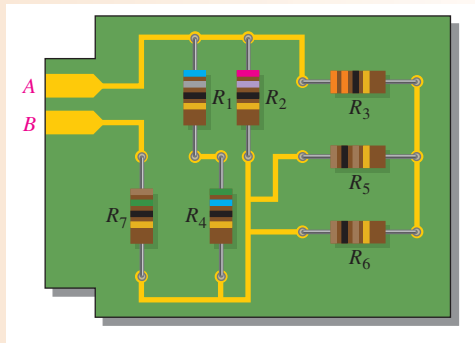

Solution In Figure 12(a), the schematic is drawn approximately in the same arrangement as that of the resistors on the board. In part (b), the resistors are reoriented so that the series-parallel relationships are more obvious.

Resistors R_1 and R_4 are in series, $R_1 + R_4$ is in parallel with R_2; R_5 and R_6 are in parallel, and this combination is in series with R_3.

The R_3, R_5, and R_6 series-parallel combination is in parallel with both R_2 and the $R_1 + R_4$ combination. This entire series-parallel combination is in series with R_7.

Figure 12(c) illustrates these relationships. Summarizing in equation form,

$$R_{AB} = (R_5 \parallel R_6 + R_3) \parallel R_2 \parallel (R_1 + R_4) + R_7$$

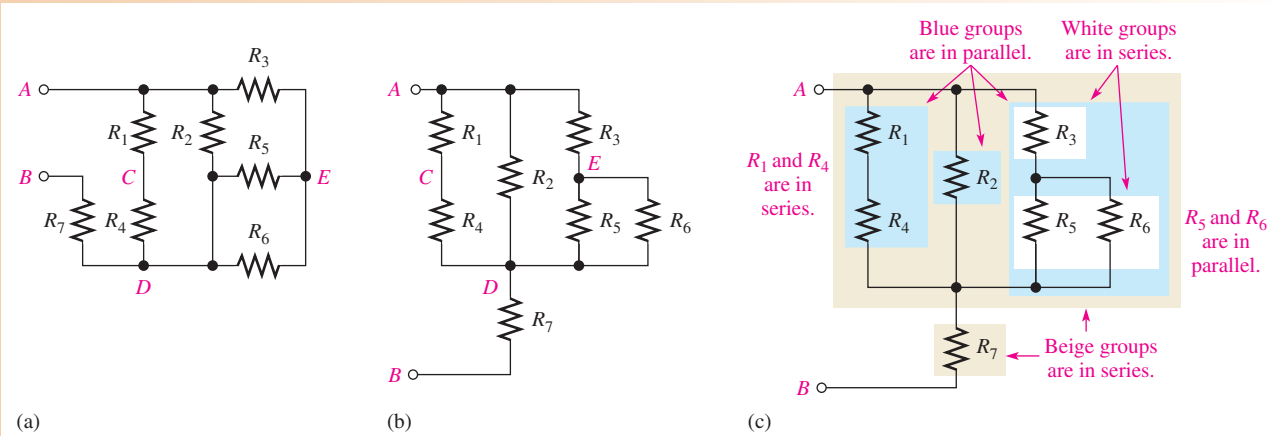

▲ FIGURE 12

Related Problem What happens if there is an open connection between R_1 and R_4 on the printed circuit board in Figure 11?

www.EngineeringBooksPdf.com

SECTION 1 CHECKUP
Answers are at the end of the chapter.

1. A certain series-parallel circuit is described as follows: R_1 and R_2 are in parallel. This parallel combination is in series with another parallel combination of R_3 and R_4. Draw the circuit.
2. In the circuit of Figure 13, describe the series-parallel relationships of the resistors.
3. Which resistors are in parallel in Figure 14?

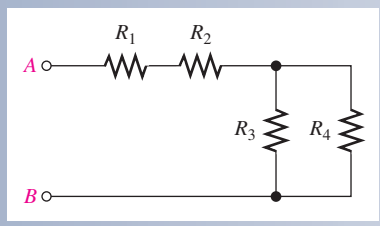

▲ FIGURE 13

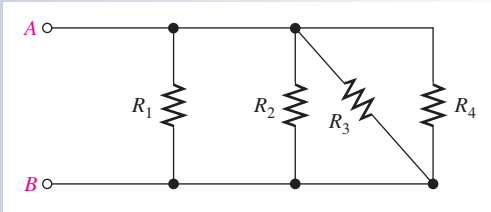

▲ FIGURE 14

4. Identify the parallel resistors in Figure 15.
5. Are the parallel combinations in Figure 15 in series?

▶ FIGURE 15

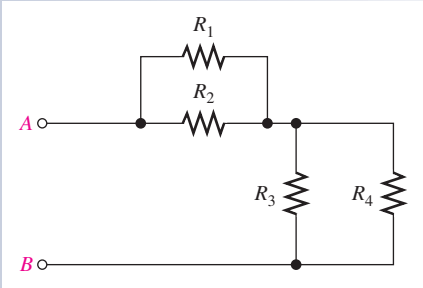

2 ANALYSIS OF SERIES-PARALLEL RESISTIVE CIRCUITS

The analysis of series-parallel circuits can be approached in many ways, depending on what information you need and what circuit values you know. The examples in this section do not represent an exhaustive coverage, but they give you an idea of how to approach series-parallel circuit analysis.

After completing this section, you should be able to

- **Analyze series-parallel circuits**
  - Determine total resistance
  - Determine all the currents
  - Determine all the voltage drops

If you know Ohm's law, Kirchhoff's laws, the voltage-divider formula, and the current-divider formula, and if you know how to apply these laws, you can solve most resistive circuit analysis problems. The ability to recognize series and parallel combinations is, of course, essential. There is no standard "cookbook" approach that can be applied to all situations. Logical thought is the most powerful tool you can apply to problem solving.

www.EngineeringBooksPdf.com

Total Resistance

To find the total resistance (R_T) of a series-parallel combination, first identify the series and parallel relationships, and then determine total series and total parallel resistance. The following two examples illustrate the general approach.

EXAMPLE 6

Determine R_T between terminals A and B of the circuit in Figure 16.

▶ FIGURE 16

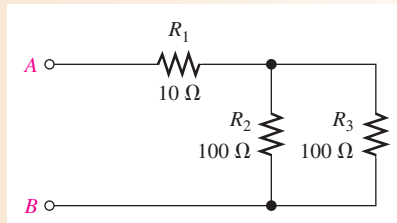

Solution Resistors R_2 and R_3 are in parallel, and this parallel combination is in series with R_1. First find the parallel resistance of R_2 and R_3. Since R_2 and R_3 are equal in value, divide the value by 2.

$$R_{2\|3} = \frac{R}{n} = \frac{100\ \Omega}{2} = 50\ \Omega$$

Now, since R_1 is in series with $R_{2\|3}$, add their values.

$$R_T = R_1 + R_{2\|3} = 10\ \Omega + 50\ \Omega = \mathbf{60\ \Omega}$$

Related Problem Determine R_T in Figure 16 if R_3 is changed to 82 Ω.

Open Multisim file E06-06; files are found at www.pearsonhighered.com/floyd/. Using the multimeter, verify the calculated value of total resistance. Change R_1 to 18 Ω, R_2 to 82 Ω, and R_3 to 82 Ω and measure the total resistance.

EXAMPLE 7

Find R_T of the circuit in Figure 17.

▶ FIGURE 17

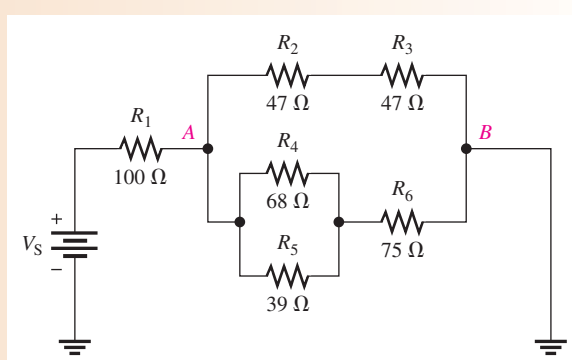

Solution **1.** In the upper branch between nodes A and B, R_2 is in series with R_3. The series combination is designated R_{2+3} and is equal to $R_2 + R_3$.

$$R_{2+3} = R_2 + R_3 = 47\ \Omega + 47\ \Omega = 94\ \Omega$$

www.EngineeringBooksPdf.com

2. In the lower branch, R_4 and R_5 are in parallel with each other. This parallel combination is designated $R_{4\|5}$.

$$R_{4\|5} = \frac{R_4R_5}{R_4 + R_5} = \frac{(68\ \Omega)(39\ \Omega)}{68\ \Omega + 39\ \Omega} = 24.8\ \Omega$$

3. Also in the lower branch, the parallel combination of R_4 and R_5 is in series with R_6. This series-parallel combination is designated $R_{4\|5+6}$.

$$R_{4\|5+6} = R_6 + R_{4\|5} = 75\ \Omega + 24.8\ \Omega = 99.8\ \Omega$$

Figure 18 shows the original circuit in a simplified equivalent form.

▶ FIGURE 18

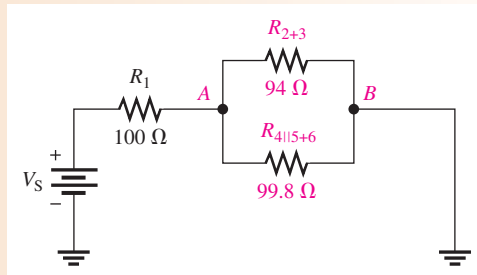

4. Now you can find the resistance between nodes A and B. It is R_{2+3} in parallel with $R_{4\|5+6}$. Calculate the equivalent resistance as follows:

$$R_{AB} = \frac{1}{\dfrac{1}{R_{2+3}} + \dfrac{1}{R_{4\|5+6}}} = \frac{1}{\dfrac{1}{94\ \Omega} + \dfrac{1}{99.8\ \Omega}} = 48.4\ \Omega$$

5. Finally, the total circuit resistance is R_1 in series with R_{AB}.

$$R_T = R_1 + R_{AB} = 100\ \Omega + 48.4\ \Omega = \mathbf{148\ \Omega}$$

Related Problem Determine R_T if a 68 Ω resistor is connected to the circuit in Figure 17 from node A to node B.

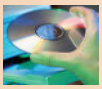

Open Multisim file E06-07. Verify the total calculated resistance. Remove R_5 from the circuit and measure the total resistance. Then check your measured value by calculating the total resistance.

Total Current

Once you know the total resistance and the source voltage, you can apply Ohm's law to find the total current in a circuit. Total current is the source voltage divided by the total resistance.

$$I_T = \frac{V_S}{R_T}$$

For example, let's find the total current in the circuit of Example 7 (Figure 17). Assume that the source voltage is 10 V. The calculation is

$$I_T = \frac{V_S}{R_T} = \frac{10\ \text{V}}{148\ \Omega} = 67.6\ \text{mA}$$

www.EngineeringBooksPdf.com

Branch Currents

Using the current-divider formula, Kirchhoff's current law, Ohm's law, or combinations of these, you can find the current in any branch of a series-parallel circuit. In some cases, it may take repeated application of the formula to find a given current.

EXAMPLE 8

Determine the current through R_4 in Figure 19 if $V_S = 5.0$ V.

▶ FIGURE 19

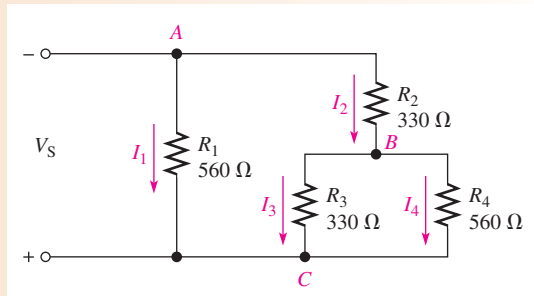

Solution First, find the current (I_2) into node B. Once you know this current, you can use the current-divider formula to find I_4, the current through R_4.

Notice that there are two main branches in the circuit. The left-most branch consists of only R_1. The right-most branch has R_2 in series with the parallel combination of R_3 and R_4. The voltage across both of these main branches is the same and equal to 5.0 V. Calculate the equivalent resistance ($R_{2+3\|4}$) of the right-most main branch and then apply Ohm's law; I_2 is the total current through this main branch. Thus,

$$R_{2+3\|4} = R_2 + \frac{R_3R_4}{R_3 + R_4} = 330\,\Omega + \frac{(330\,\Omega)(560\,\Omega)}{890\,\Omega} = 538\,\Omega$$

$$I_2 = \frac{V_S}{R_{2+3\|4}} = \frac{5.0\text{ V}}{538\,\Omega} = 9.29\text{ mA}$$

Use the two-resistor current-divider formula to calculate I_4.

$$I_4 = \left(\frac{R_3}{R_3 + R_4}\right)I_2 = \left(\frac{330\,\Omega}{890\,\Omega}\right)9.29\text{ mA} = \mathbf{3.45\ mA}$$

Related Problem Find I_1, I_3, and I_T in Figure 19.

Open Multisim file E06-08. Measure the current in each resistor. Compare the measurements with the calculated values.

Voltage Relationships

The circuit in Figure 20 illustrates voltage relationships in a series-parallel circuit. Voltmeters are connected to measure each of the resistor voltages, and the readings are indicated.

Some general observations about Figure 20 are as follows:

1. V_{R1} and V_{R2} are equal because R_1 and R_2 are in parallel. (Recall that voltages across parallel branches are the same.) V_{R1} and V_{R2} are the same as the voltage from A to B.

2. V_{R3} is equal to $V_{R4} + V_{R5}$ because R_3 is in parallel with the series combination of R_4 and R_5. (V_{R3} is the same as the voltage from B to C.)

www.EngineeringBooksPdf.com

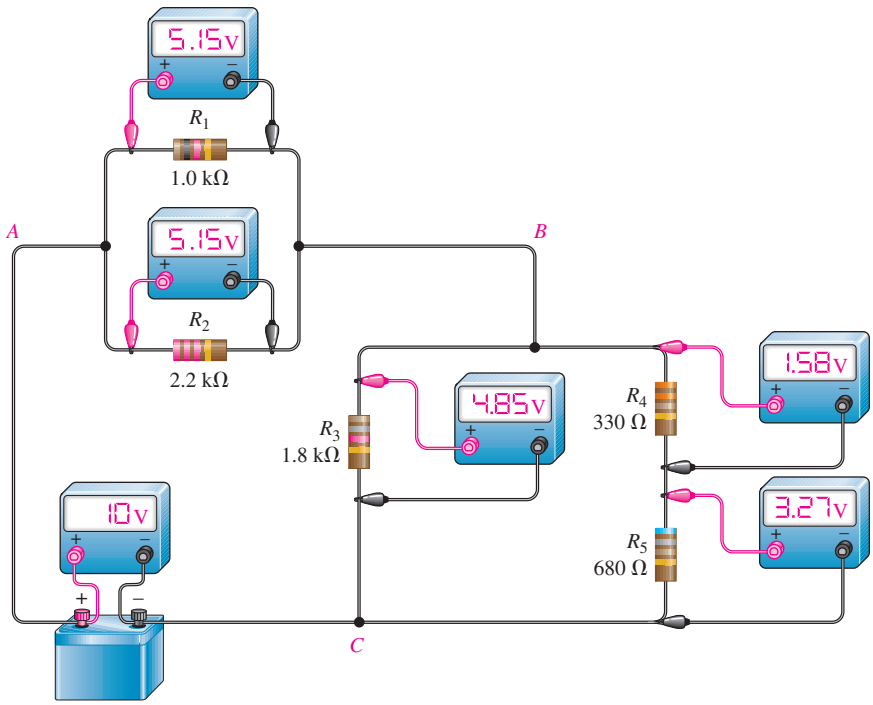

FIGURE 20

Illustration of voltage relationships.

3. V_{R4} is about one-third of the voltage from B to C because R_4 is about one-third of the resistance $R_4 + R_5$ (by the voltage-divider principle).
4. V_{R5} is about two-thirds of the voltage from B to C because R_5 is about two-thirds of $R_4 + R_5$.
5. $V_{R1} + V_{R3} - V_S = 0$ because, by Kirchhoff's voltage law, the algebraic sum of the voltage drops around a single closed path must equal zero.

Example 9 will verify the meter readings in Figure 20.

EXAMPLE 9

Verify that the voltmeter readings in Figure 20 are correct. The circuit is redrawn as a schematic in Figure 21.

FIGURE 21

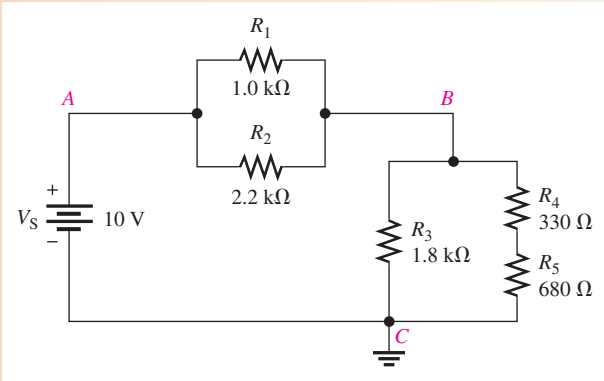

Solution The resistance from A to B is the parallel combination of R_1 and R_2.

$$R_{AB} = \frac{R_1R_2}{R_1 + R_2} = \frac{(1.0\ \text{k}\Omega)(2.2\ \text{k}\Omega)}{3.2\ \text{k}\Omega} = 688\ \Omega$$

www.EngineeringBooksPdf.com

The resistance from B to C is R_3 in parallel with the series combination of R_4 and R_5.

$$R_4 + R_5 = 330\,\Omega + 680\,\Omega = 1010\,\Omega = 1.01\text{ k}\Omega$$

$$R_{BC} = \frac{R_3(R_4 + R_5)}{R_3 + R_4 + R_5} = \frac{(1.8\text{ k}\Omega)(1.01\text{ k}\Omega)}{2.81\text{ k}\Omega} = 647\,\Omega$$

The resistance from A to B is in series with the resistance from B to C, so the total circuit resistance is

$$R_T = R_{AB} + R_{BC} = 688\,\Omega + 647\,\Omega = 1335\,\Omega$$

Use the voltage-divider principle to calculate the voltages.

$$V_{AB} = \left(\frac{R_{AB}}{R_T}\right)V_S = \left(\frac{688\,\Omega}{1335\,\Omega}\right)10\text{ V} = 5.15\text{ V}$$

$$V_{BC} = \left(\frac{R_{BC}}{R_T}\right)V_S = \left(\frac{647\,\Omega}{1335\,\Omega}\right)10\text{ V} = 4.85\text{ V}$$

$$V_{R1} = V_{R2} = V_{AB} = \mathbf{5.15\text{ V}}$$

$$V_{R3} = V_{BC} = \mathbf{4.85\text{ V}}$$

$$V_{R4} = \left(\frac{R_4}{R_4 + R_5}\right)V_{BC} = \left(\frac{330\,\Omega}{1010\,\Omega}\right)4.85\text{ V} = \mathbf{1.58\text{ V}}$$

$$V_{R5} = \left(\frac{R_5}{R_4 + R_5}\right)V_{BC} = \left(\frac{680\,\Omega}{1010\,\Omega}\right)4.85\text{ V} = \mathbf{3.27\text{ V}}$$

Related Problem Determine each voltage drop in Figure 21 if the source voltage is doubled.

Open Multisim file E06-09. Measure the voltage across each resistor and compare to the calculated values. Verify by measurement that each voltage drop doubles if the source voltage is doubled and is halved if the source voltage is halved.

EXAMPLE 10

Determine the voltage drop across each resistor in Figure 22.

▶ **FIGURE 22**

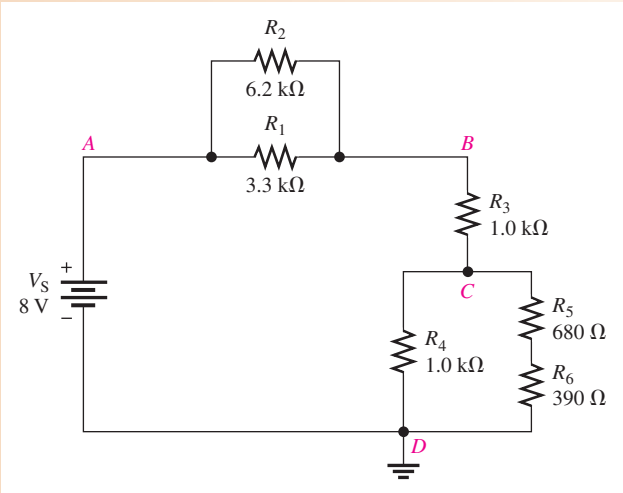

Solution Because you know the total voltage, you can solve this problem using the voltage-divider formula.

www.EngineeringBooksPdf.com

Step 1: Reduce each parallel combination to an equivalent resistance. Since R_1 and R_2 are in parallel between nodes A and B, combine their values.

$$R_{AB} = \frac{R_1R_2}{R_1 + R_2} + \frac{(3.3\text{ k}\Omega)(6.2\text{ k}\Omega)}{9.5\text{ k}\Omega} = 2.15\text{ k}\Omega$$

Since R_4 is in parallel with the R_5 and R_6 series combination (R_{5+6}) between nodes C and D, combine these values.

$$R_{CD} = \frac{R_4(R_{5+6})}{R_4 + R_{5+6}} + \frac{(1.0\text{ k}\Omega)(1.07\text{ k}\Omega)}{2.07\text{ k}\Omega} = 517\ \Omega$$

Step 2: Draw the equivalent circuit as shown in Figure 23. The total circuit resistance is

$$R_T = R_{AB} + R_3 + R_{CD} = 2.15\text{ k}\Omega + 1.0\text{ k}\Omega + 517\ \Omega = 3.67\text{ k}\Omega$$

▶ FIGURE 23

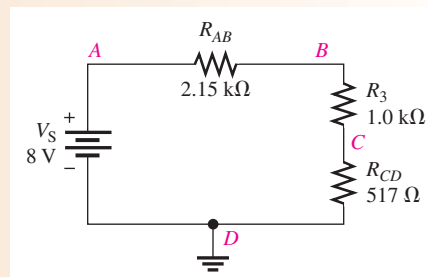

Step 3: Apply the voltage-divider formula to solve for the voltages in the equivalent circuit.

$$V_{AB} = \left(\frac{R_{AB}}{R_T}\right)V_S = \left(\frac{2.15\text{ k}\Omega}{3.67\text{ k}\Omega}\right)8\text{ V} = 4.69\text{ V}$$

$$V_{BC} = \left(\frac{R_3}{R_T}\right)V_S = \left(\frac{1.0\text{ k}\Omega}{3.67\text{ k}\Omega}\right)8\text{ V} = 2.18\text{ V}$$

$$V_{CD} = \left(\frac{R_{CD}}{R_T}\right)V_S = \left(\frac{517\ \Omega}{3.67\text{ k}\Omega}\right)8\text{ V} = 1.13\text{ V}$$

Refer to Figure 22. V_{AB} equals the voltage across both R_1 and R_2.

$$V_{R1} = V_{R2} = V_{AB} = \mathbf{4.69\ V}$$

V_{BC} is the voltage across R_3.

$$V_{R3} = V_{BC} = \mathbf{2.18\ V}$$

V_{CD} is the voltage across R_4 and also across the series combination of R_5 and R_6.

$$V_{R4} = V_{CD} = \mathbf{1.13\ V}$$

Step 4: Apply the voltage-divider formula to the series combination of R_5 and R_6 to get V_{R5} and V_{R6}.

$$V_{R5} = \left(\frac{R_5}{R_5 + R_6}\right)V_{CD} = \left(\frac{680\ \Omega}{1070\ \Omega}\right)1.13\text{ V} = \mathbf{718\ mV}$$

$$V_{R6} = \left(\frac{R_6}{R_5 + R_6}\right)V_{CD} = \left(\frac{390\ \Omega}{1070\ \Omega}\right)1.13\text{ V} = \mathbf{412\ mV}$$

www.EngineeringBooksPdf.com

Related Problem Determine the current and power in each resistor in Figure 22.

Open Multisim file E06-10. Measure the voltage across each resistor and compare to the calculated values. If R_4 is increased to 2.2 kΩ, specify which voltage drops increase and which ones decrease. Verify this by measurement.

SECTION 2 CHECKUP

1. Find the total resistance between A and B in the circuit of Figure 24.
2. Find the current through R_3 in Figure 24.
3. Find V_{R2} in Figure 24.
4. Determine R_T and I_T in Figure 25.

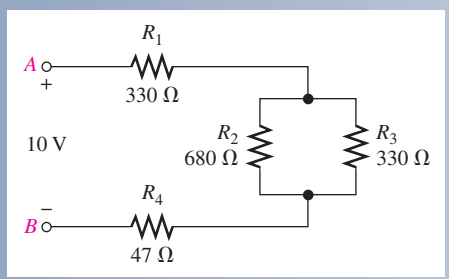

▲ FIGURE 24

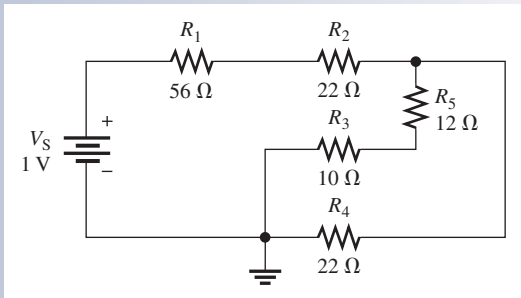

▲ FIGURE 25

3 VOLTAGE DIVIDERS WITH RESISTIVE LOADS

In this section, you will learn how resistive loads affect the operation of voltage-divider circuits.

After completing this section, you should be able to

- **Analyze loaded voltage dividers**
  - Determine the effect of a resistive load on a voltage-divider circuit
  - Define *bleeder current*

The voltage divider in Figure 26(a) produces an output voltage (V_{OUT}) of 5 V because the input is 10 V and the two resistors are of equal value. This voltage is the unloaded output voltage. When a load resistor, R_L, is connected from the output to ground as shown in

▶ FIGURE 26

A voltage divider with both unloaded and loaded outputs.

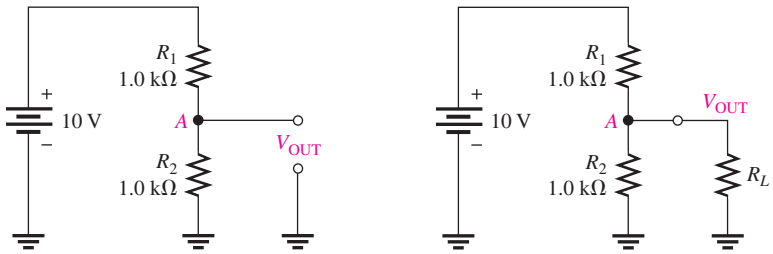

www.EngineeringBooksPdf.com

Figure 26(b), the output voltage is reduced by an amount that depends on the value of R_L. This effect is called **loading**. The load resistor is in parallel with R_2, reducing the resistance from node A to ground and, as a result, also reducing the voltage across the parallel combination. This is one effect of loading a voltage divider. Another effect of a load is that more current is drawn from the source because the total resistance of the circuit is reduced.

The effect of loading on a voltage divider is important to take into account when choosing resistors for a divider. When R_L is large compared to the divider resistors, the loading effect is small and the output voltage will change only a small amount from its unloaded value. If the loading effect is small, the divider is said to be a *stiff voltage divider.* This term is relative but generally means that the difference between the unloaded and loaded output voltage is small. As a rule of thumb, a **stiff voltage divider** is one in which the load resistor is at least ten times larger than the divider resistors. Stiff voltage dividers are more stable but use more power, so the choice of divider resistors is a trade-off between these two parameters. Figure 27 illustrates the effect of a load resistor on the output voltage.

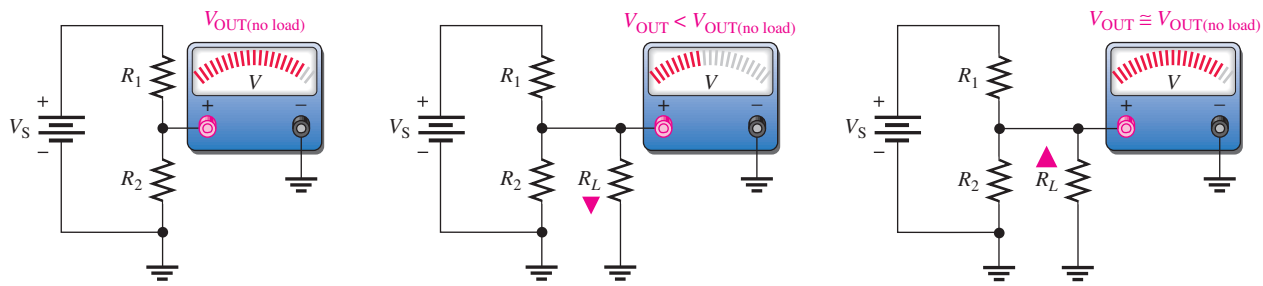

(a) No load (b) R_L not significantly greater than R_2 (c) R_L much greater than R_2

▲ **FIGURE 27**

The effect of a load resistor. The circuit in part (c) illustrates a stiff voltage divider.

EXAMPLE 11

(a) Determine the unloaded output voltage of the voltage divider in Figure 28.

(b) Find the loaded output voltages of the voltage divider in Figure 28 for the following two values of load resistance: $R_L = 10\ \text{k}\Omega$ and $R_L = 100\ \text{k}\Omega$.

▶ **FIGURE 28**

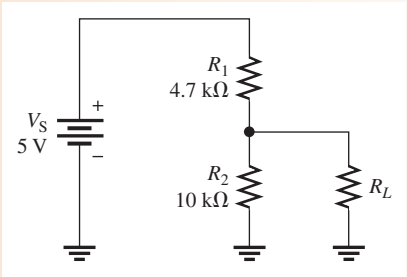

Solution **(a)** The unloaded output voltage is

$$V_{OUT(unloaded)} = \left(\frac{R_2}{R_1 + R_2}\right)V_S = \left(\frac{10\ \text{k}\Omega}{14.7\ \text{k}\Omega}\right)5\ \text{V} = \mathbf{3.40\ V}$$

(b) With the 10 kΩ load resistor connected, R_L is in parallel with R_2, which gives

$$R_2 \parallel R_L = \frac{R_2 R_L}{R_2 + R_L} = \frac{(10\ \text{k}\Omega)(10\ \text{k}\Omega)}{20\ \text{k}\Omega} = 5.0\ \text{k}\Omega$$

www.EngineeringBooksPdf.com

▶ FIGURE 29

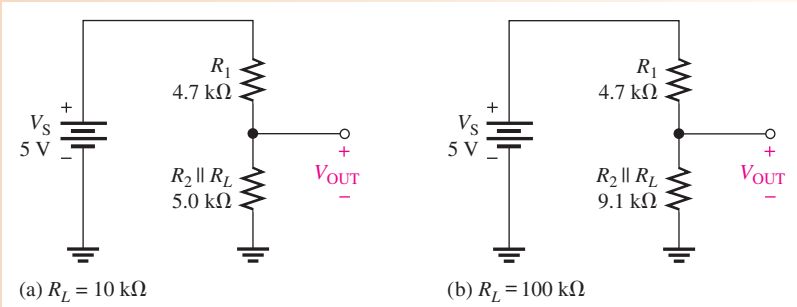

The equivalent circuit is shown in Figure 29(a). The loaded output voltage is

$$V_{OUT(loaded)} = \left(\frac{R_2 \parallel R_L}{R_1 + R_2 \parallel R_L}\right)V_S = \left(\frac{5.0\,k\Omega}{9.7\,k\Omega}\right)5\,V = \mathbf{2.58\,V}$$

With the 100 kΩ load, the resistance from output to ground is

$$R_2 \parallel R_L = \frac{R_2R_L}{R_2 + R_L} = \frac{(10\,k\Omega)(100\,k\Omega)}{110\,k\Omega} = 9.1\,k\Omega$$

The equivalent circuit is shown in Figure 29(b). The loaded output voltage is

$$V_{OUT(loaded)} = \left(\frac{R_2 \parallel R_L}{R_1 + R_2 \parallel R_L}\right)V_S = \left(\frac{9.1\,k\Omega}{13.8\,k\Omega}\right)5\,V = \mathbf{3.30\,V}$$

For the smaller value of R_L, the reduction in V_{OUT} is

$$3.40\,V - 2.58\,V = 0.82\,V \qquad \text{(a 24\% drop in output voltage)}$$

For the larger value of R_L, the reduction in V_{OUT} is

$$3.40\,V - 3.30\,V = 0.10\,V \qquad \text{(a 3\% drop in output voltage)}$$

This illustrates the loading effect of R_L on the voltage divider.

Related Problem Determine V_{OUT} in Figure 28 for a 1.0 MΩ load resistance.

Open Multisim file E06-11. Measure the voltage at the output terminal with respect to ground. Connect a 10 kΩ load resistor from the output to ground and measure the output voltage. Change the load resistor to 100 kΩ and measure the output voltage. Do these measurements agree closely with the calculated values?

Load Current and Bleeder Current

In a multiple-tap loaded voltage-divider circuit, the total current drawn from the source consists of currents through the load resistors, called **load currents**, and the divider resistors. Figure 30 shows a voltage divider with two voltage outputs or taps. Notice that the total current, I_T, is through R_1. The total current is composed of the two branch currents, I_{RL1} and I_2. The current I_2 is composed of two additional branch currents, I_{RL2} and I_3. Current I_3 is called the **bleeder current**, which is the current left after the total load current is subtracted from the total current in the circuit.

Equation 1

$$I_{BLEEDER} = I_T - I_{RL1} - I_{RL2}$$

www.EngineeringBooksPdf.com

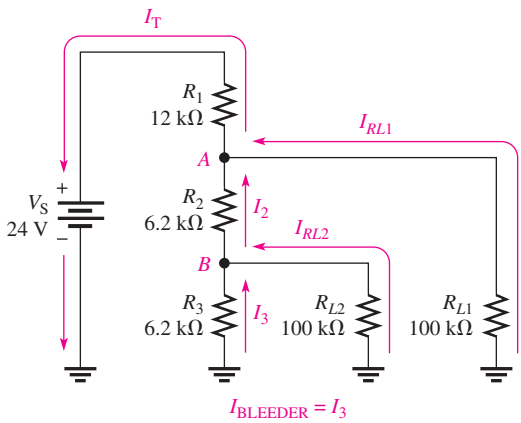

◀ **FIGURE 30**

Currents in a two-tap loaded voltage divider.

EXAMPLE 12

Determine the load currents I_{RL1} and I_{RL2} and the bleeder current I_3 in the two-tap loaded voltage divider in Figure 30.

Solution

The equivalent resistance from node A to ground is the 100 kΩ load resistor R_{L1} in parallel with the combination of R_2 in series with the parallel combination of R_3 and R_{L2}. Determine the resistance values first. R_3 in parallel with R_{L2} is designated R_B. The resulting equivalent circuit is shown in Figure 31(a).

$$R_B = \frac{R_3 R_{L2}}{R_3 + R_{L2}} = \frac{(6.2\,\text{k}\Omega)(100\,\text{k}\Omega)}{106.2\,\text{k}\Omega} = 5.84\,\text{k}\Omega$$

R_2 in series with R_B is designated R_{2+B}. The resulting equivalent circuit is shown in Figure 31(b).

$$R_{2+B} = R_2 + R_B = 6.2\,\text{k}\Omega + 5.84\,\text{k}\Omega = 12.0\,\text{k}\Omega$$

R_{L1} in parallel with R_{2+B} is designated R_A. The resulting equivalent circuit is shown in Figure 31(c).

$$R_A = \frac{R_{L1} R_{2+B}}{R_{L1} + R_{2+B}} = \frac{(100\,\text{k}\Omega)(12.0\,\text{k}\Omega)}{112\,\text{k}\Omega} = 10.7\,\text{k}\Omega$$

R_A is the total resistance from node A to ground. The total resistance for the circuit is

$$R_T = R_A + R_1 = 10.7\,\text{k}\Omega + 12\,\text{k}\Omega = 22.7\,\text{k}\Omega$$

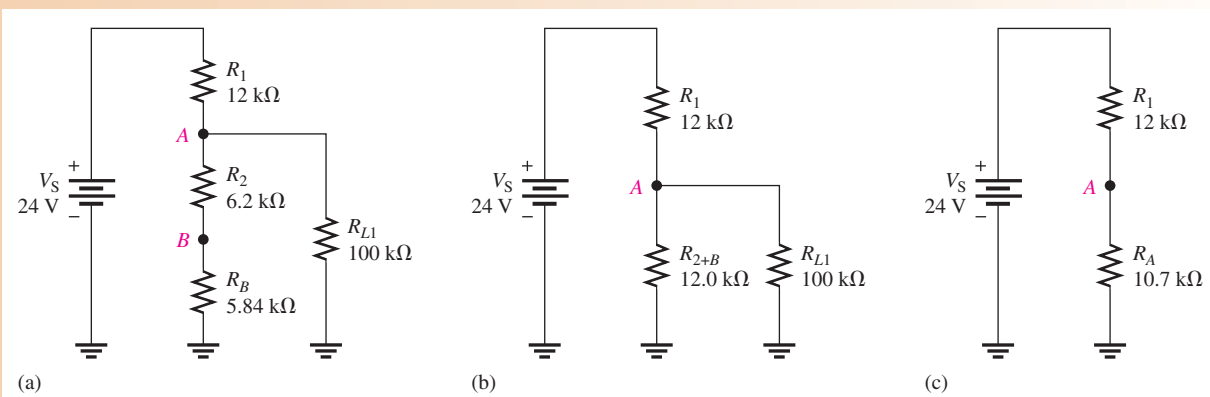

▲ **FIGURE 31**

www.EngineeringBooksPdf.com

Determine the voltage across R_{L1} as follows, using the equivalent circuit in Figure 31(c):

$$V_{RL1} = V_A = \left(\frac{R_A}{R_T}\right)V_S = \left(\frac{10.7\text{ k}\Omega}{22.7\text{ k}\Omega}\right)24\text{ V} = 11.3\text{ V}$$

The load current through R_{L1} is

$$I_{RL1} = \frac{V_{RL1}}{R_{L1}} = \left(\frac{11.3\text{ V}}{100\text{ k}\Omega}\right) = \mathbf{113\ \mu A}$$

Determine the voltage at node B by using the equivalent circuit in Figure 31(a) and the voltage at node A.

$$V_B = \left(\frac{R_B}{R_{2+B}}\right)V_A = \left(\frac{5.84\text{ k}\Omega}{12.0\text{ k}\Omega}\right)11.3\text{ V} = 5.50\text{ V}$$

The load current through R_{L2} is

$$I_{RL2} = \frac{V_{RL2}}{R_{L2}} = \frac{V_B}{R_{L2}} = \frac{5.50\text{ V}}{100\text{ k}\Omega} = \mathbf{55\ \mu A}$$

The bleeder current is

$$I_3 = \frac{V_B}{R_3} = \frac{5.50\text{ V}}{6.2\text{ k}\Omega} = \mathbf{887\ \mu A}$$

Related Problem What will happen to the load current in R_{L2} if R_{L1} is disconnected?

Open Multisim file E06-12. Measure the voltage across and the current through each load resistor, R_{L1} and R_{L2}.

SECTION 3 CHECKUP

1. A load resistor is connected to an output on a voltage divider. What effect does the load resistor have on the output voltage?
2. A larger-value load resistor will cause the output voltage of a voltage divider to change less than a small-value one will. (True or False)
3. For the voltage divider in Figure 32, determine the unloaded output voltage. Also determine the output voltage with a 10 MΩ load resistor connected from the output to ground.

▶ FIGURE 32

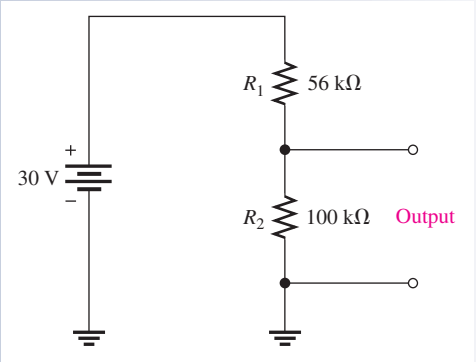

www.EngineeringBooksPdf.com

4 LOADING EFFECT OF A VOLTMETER

As you have learned, voltmeters must be connected in parallel with a resistor in order to measure the voltage across the resistor. Because of its internal resistance, a voltmeter, or any other measuring instrument for that matter, puts a load on the circuit and will affect, to a certain extent, the voltage that is being measured. Until now, we have ignored the loading effect because the internal resistance of a voltmeter is very high, and normally it has negligible effect on the circuit that is being measured. However, if the internal resistance of the voltmeter is not sufficiently greater than the circuit resistance across which it is connected, the loading effect will cause the measured voltage to be less than its actual value.

After completing this section, you should be able to

- **Determine the loading effect of a voltmeter on a circuit**
  - Explain why a voltmeter can load a circuit
  - Discuss the internal resistance of a voltmeter

When a voltmeter is connected to a circuit as shown, for example, in Figure 33(a), its internal resistance appears in parallel with R_3, as shown in part (b). The resistance from A to B is altered by the loading effect of the voltmeter's internal resistance, R_M, and is equal to $R_3 \parallel R_M$, as indicated in part (c).

If R_M is much greater than R_3, the resistance from A to B changes very little, and the meter reading is very close to the actual voltage. If R_M is not sufficiently greater than R_3, the resistance from A to B is reduced significantly, and the voltage across R_3 is altered by the loading effect of the meter. A good rule of thumb for troubleshooting work is that *if the meter resistance is at least ten times greater than the resistance across which it is connected, the loading effect can be neglected (measurement error is less than 10%).*

Most voltmeters are part of a multifunction instrument such as the DMM or an analog multimeter. The voltmeter in a DMM will typically have an internal resistance of 10 MΩ or more, so the loading effect is important only in very high-resistance circuits. DMMs have a constant resistance on all ranges because the input is connected to an internal fixed voltage divider. For analog multimeters, the internal resistance depends on the range selected for making a measurement. To determine the loading effect, you need to know the **sensitivity** of the meter, a value given by the manufacturer on the meter or in the manual. Sensitivity is expressed in ohms/volt and is typically about 20,000 Ω/V. To determine the

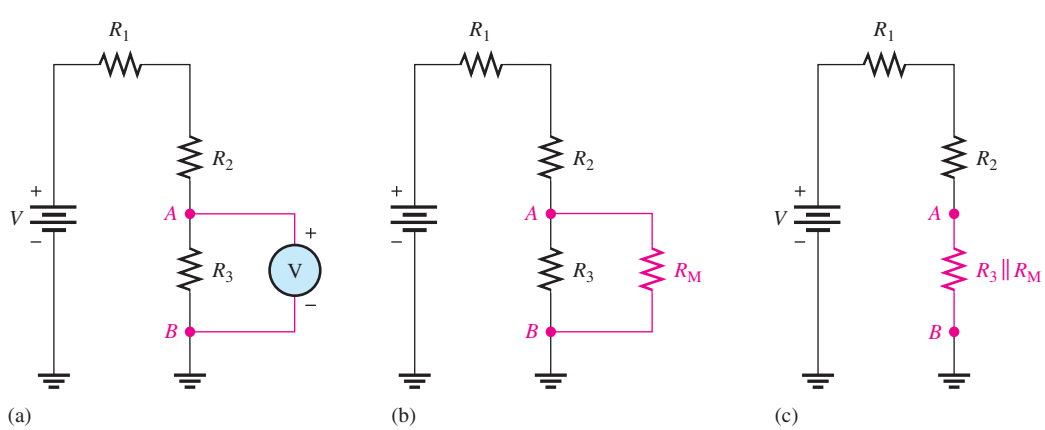

▲ FIGURE 33

The loading effect of a voltmeter.

www.EngineeringBooksPdf.com

internal series resistance, multiply the sensitivity by the maximum voltage on the range selected. For example, a 20,000 Ω/V meter will have an internal resistance of 20,000 Ω on the 1 V range and 200,000 Ω on the 10 V range. As you can see, there is a smaller loading effect for higher voltage ranges than for lower ones on the analog multimeter.

EXAMPLE 13

How much does the digital voltmeter affect the voltage being measured for each circuit indicated in Figure 34? Assume the meter has an input resistance (R_M) of 10 MΩ.

▶ **FIGURE 34**

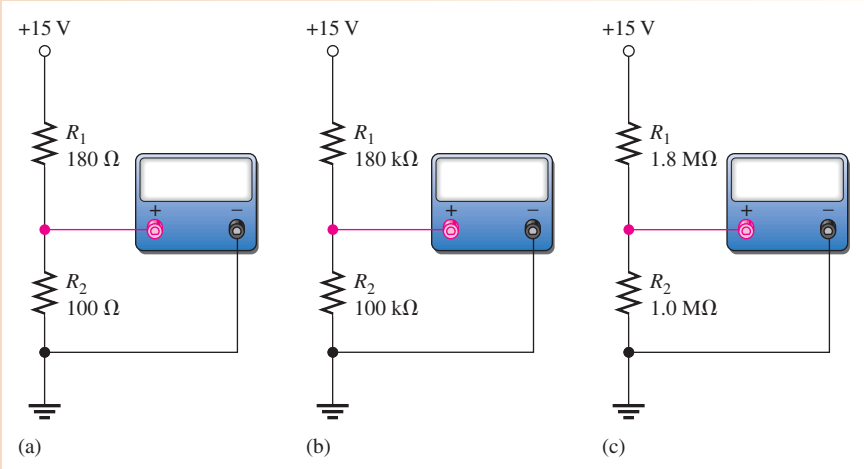

Solution To show the small differences more clearly, the results are expressed in more than three significant digits in this example.

(a) Refer to Figure 34(a). The unloaded voltage across R_2 in the voltage-divider circuit is

$$V_{R2} = \left(\frac{R_2}{R_1 + R_2}\right)V_S = \left(\frac{100\ \Omega}{280\ \Omega}\right)15\ \text{V} = 5.357\ \text{V}$$

The meter's resistance in parallel with R_2 is

$$R_2 \parallel R_M = \left(\frac{R_2 R_M}{R_2 + R_M}\right) = \frac{(100\ \Omega)(10\ \text{M}\Omega)}{10.0001\ \text{M}\Omega} = 99.999\ \Omega$$

The voltage actually measured by the meter is

$$V_{R2} = \left(\frac{R_2 \parallel R_M}{R_1 + R_2 \parallel R_M}\right)V_S = \left(\frac{99.999\ \Omega}{279.999\ \Omega}\right)15\ \text{V} = 5.357\ \text{V}$$

The voltmeter has no measurable loading effect.

(b) Refer to Figure 34(b).

$$V_{R2} = \left(\frac{R_2}{R_1 + R_2}\right)V_S = \left(\frac{100\ \text{k}\Omega}{280\ \text{k}\Omega}\right)15\ \text{V} = 5.357\ \text{V}$$

$$R_2 \parallel R_M = \frac{R_2 R_M}{R_2 + R_M} = \frac{(100\ \text{k}\Omega)(10\ \text{M}\Omega)}{10.1\ \text{M}\Omega} = 99.01\ \text{k}\Omega$$

The voltage actually measured by the meter is

$$V_{R2} = \left(\frac{R_2 \parallel R_M}{R_1 + R_2 \parallel R_M}\right)V_S = \left(\frac{99.01\ \text{k}\Omega}{279.01\ \text{k}\Omega}\right)15\ \text{V} = 5.323\ \text{V}$$

www.EngineeringBooksPdf.com

The loading effect of the voltmeter reduces the voltage by a very small amount.

(c) Refer to Figure 34(c).

$$V_{R2} = \left(\frac{R_2}{R_1 + R_2}\right)V_S = \left(\frac{1.0\ \text{M}\Omega}{2.8\ \text{M}\Omega}\right)15\ \text{V} = 5.357\ \text{V}$$

$$R_2 \parallel R_M = \frac{R_2 R_M}{R_2 + R_M} = \frac{(1.0\ \text{M}\Omega)(10\ \text{M}\Omega)}{11\ \text{M}\Omega} = 909.09\ \text{k}\Omega$$

The voltage actually measured is

$$V_{R2} = \left(\frac{R_2 \parallel R_M}{R_1 + R_2 \parallel R_M}\right)V_S = \left(\frac{909.09\ \text{k}\Omega}{2.709\ \text{M}\Omega}\right)15\ \text{V} = 5.034\ \text{V}$$

The loading effect of the voltmeter reduces the voltage by a noticeable amount. As you can see, the higher the resistance across which a voltage is measured, the more the loading effect.

Related Problem Calculate the voltage across R_2 in Figure 34(c) if the meter resistance is 20 MΩ.

SECTION 4 CHECKUP

1. Explain why a voltmeter can potentially load a circuit.
2. If a voltmeter with a 10 MΩ internal resistance is measuring the voltage across a 1.0 kΩ resistor, should you normally be concerned about the loading effect?
3. If a voltmeter with a 10 MΩ resistance is measuring the voltage across a 3.3 MΩ resistor, should you be concerned about the loading effect?
4. What is the internal series resistance of a 20,000 Ω/V VOM if it is on the 200 V range?

5 THE WHEATSTONE BRIDGE

The Wheatstone bridge circuit can be used to precisely measure resistance. However, the bridge is most commonly used in conjunction with transducers to measure physical quantities such as strain, temperature, and pressure. **Transducers** are devices that sense a change in a physical parameter and convert that change into an electrical quantity such as a change in resistance. For example, a strain gauge exhibits a change in resistance when it is exposed to mechanical factors such as force, pressure, or displacement. A thermistor exhibits a change in its resistance when it is exposed to a change in temperature. The Wheatstone bridge can be operated in a balanced or an unbalanced condition. The condition of operation depends on the type of application.

After completing this section, you should be able to

- **Analyze and apply a Wheatstone bridge**
  - Determine when a bridge is balanced
  - Determine an unknown resistance with a balanced bridge
  - Determine when a bridge is unbalanced
  - Discuss measurements using an unbalanced bridge

www.EngineeringBooksPdf.com

A **Wheatstone bridge** circuit is shown in its most common diamond-shaped configuration in Figure 35(a). It consists of four resistors and a dc voltage source connected across the top and bottom points of the diamond. The output voltage is taken across the left and right points of the diamond between A and B. In part (b), the circuit is drawn in a slightly different way to more clearly show its series-parallel configuration.

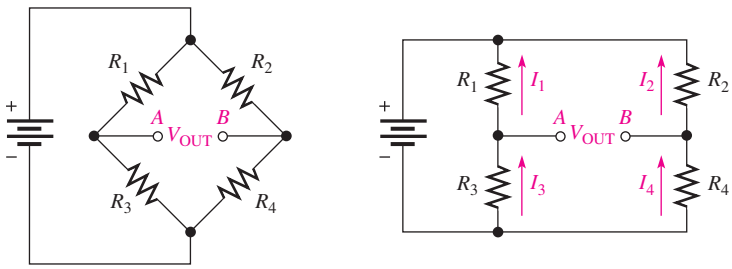

▶ **FIGURE 35**

Wheatstone bridge. Notice that the bridge forms two back-to-back voltage dividers.

HISTORY NOTE

Sir Charles Wheatstone 1802–1875

Wheatstone was a British scientist and inventor of many scientific breakthroughs, including the English concertina, the stereoscope (a device for displaying three-dimensional images), and an encryption cipher technique. Wheatstone is best known for his contributions in the development of the Wheatstone bridge, originally invented by Samuel Hunter Christie, and as a major figure in the development of telegraphy. Wheatstone gave full credit for the invention to Christie, but because of his work in developing and applying the bridge, it became known as the Wheatstone bridge. (Photo credit: AIP Emilio Segre Visual Archives, Brittle Book Collection.)

The Balanced Wheatstone Bridge

The Wheatstone bridge in Figure 35 is in the **balanced bridge** condition when the output voltage (V_{OUT}) between terminals A and B is equal to zero.

$$V_{OUT} = 0\text{ V}$$

When the bridge is balanced, the voltages across R_1 and R_2 are equal ($V_1 = V_2$) and the voltages across R_3 and R_4 are equal ($V_3 = V_4$). Therefore, the voltage ratios can be written as

$$\frac{V_1}{V_3} = \frac{V_2}{V_4}$$

Substituting IR for V by Ohm's law gives

$$\frac{I_1R_1}{I_3R_3} = \frac{I_2R_2}{I_4R_4}$$

Since $I_1 = I_3$ and $I_2 = I_4$, all the current terms cancel, leaving the resistor ratios.

$$\frac{R_1}{R_3} = \frac{R_2}{R_4}$$

Solving for R_1 results in the following formula:

$$R_1 = R_3\left(\frac{R_2}{R_4}\right)$$

This formula allows you to find the value of resistor R_1 in terms of the other resistor values when the bridge is balanced. You can also find the value of any other resistor in a similar way.

Using the Balanced Wheatstone Bridge to Find an Unknown Resistance Assume that R_1 in Figure 35 has an unknown value, which we call R_X. Resistors R_2 and R_4 have fixed values so that their ratio, R_2/R_4, also has a fixed value. Since R_X can be any value, R_3 must be adjusted to make $R_1/R_3 = R_2/R_4$ in order to create a balanced condition. Therefore, R_3 is a variable resistor, which we will call R_V. When R_X is placed in the bridge, R_V is adjusted until the bridge is balanced as indicated by a zero output voltage. Then, the unknown resistance is found as

Equation 2

$$\boldsymbol{R_X = R_V\left(\frac{R_2}{R_4}\right)}$$

www.EngineeringBooksPdf.com

The ratio R_2/R_4 is the scale factor.

An older type of measuring instrument called a *galvanometer* can be connected between the output terminals A and B to detect a balanced condition. The galvanometer is essentially a very sensitive ammeter that senses current in either direction. It differs from a regular ammeter in that the midscale point is zero. In modern instruments, an amplifier connected across the bridge output indicates a balanced condition when its output is 0 V. Also, high precision micro-adjustable resistors can be used in demanding applications. The micro-adjustable resistors enable fine adjustment of the bridge resistors during manufacture for applications such as medical sensors, scales, and precision measurements.

From Equation 2, the value of R_V at balance multiplied by the scale factor R_2/R_4 is the actual resistance value of R_X. If $R_2/R_4 = 1$, then $R_X = R_V$, if $R_2/R_4 = 0.5$, then $R_X = 0.5R_V$, and so on. In a practical bridge circuit, the position of the R_V adjustment can be calibrated to indicate the actual value of R_X on a scale or with some other method of display.

EXAMPLE 14

Determine the value of R_X in the balanced bridge shown in Figure 36. The bridge is balanced ($V_{OUT} = 0$ V) when R_V is set at 1200 Ω.

▶ FIGURE 36

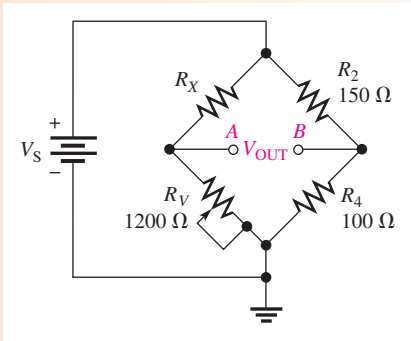

Solution The scale factor is

$$\frac{R_2}{R_4} = \frac{150\ \Omega}{100\ \Omega} = 1.5$$

The unknown resistance is

$$R_X = R_V\left(\frac{R_2}{R_4}\right) = (1200\ \Omega)(1.5) = \mathbf{1800\ \Omega}$$

Related Problem If R_V must be adjusted to 2.2 kΩ to balance the bridge in Figure 36, what is R_X?

The Unbalanced Wheatstone Bridge

An **unbalanced bridge** condition occurs when V_{OUT} is not equal to zero. The unbalanced bridge is used to measure several types of physical quantities such as mechanical strain, temperature, or pressure. This can be done by connecting a transducer in one leg of the bridge, as shown in Figure 37. The resistance of the transducer changes proportionally to the changes in the parameter that it is measuring. If the bridge is balanced at a known point, then the amount of deviation from the balanced condition, as indicated by the output voltage, indicates the amount of change in the parameter being measured. Therefore, the value of the parameter being measured can be determined by the amount that the bridge is unbalanced.

www.EngineeringBooksPdf.com

▶ FIGURE 37

A bridge circuit for measuring a physical parameter using a transducer.

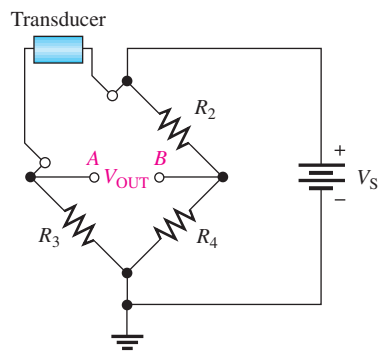

A Bridge Circuit for Measuring Temperature If temperature is to be measured, the transducer can be a thermistor, which is a temperature-sensitive resistor. The thermistor resistance changes in a predictable way as the temperature changes. A change in temperature causes a change in thermistor resistance, which causes a corresponding change in the output voltage of the bridge as it becomes unbalanced. The output voltage is proportional to the temperature; therefore, either a voltmeter connected across the output can be calibrated to show the temperature or the output voltage can be amplified and converted to digital form to drive a readout display of the temperature.

A bridge circuit used to measure temperature is designed so that it is balanced at a reference temperature and becomes unbalanced at a measured temperature. For example, let's say the bridge is to be balanced at 25°C. A thermistor will have a known value of resistance at 25°C.

EXAMPLE 15

Determine the output voltage of the temperature-measuring bridge circuit in Figure 38 if the thermistor is exposed to a temperature of 50°C and its resistance at 25°C is 1.0 kΩ. Assume the resistance of the thermistor decreases to 900 Ω at 50°C.

▶ FIGURE 38

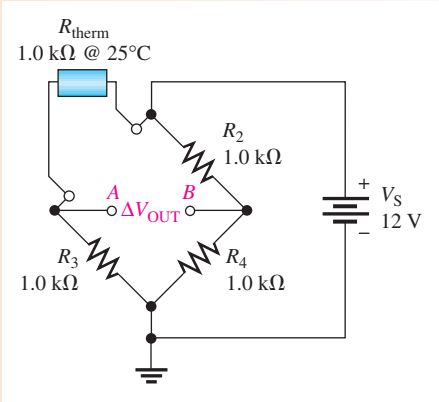

Solution Apply the voltage-divider formula to the left side of the bridge at 50°C.

$$V_A = \left(\frac{R_3}{R_3 + R_{therm}}\right)V_S = \left(\frac{1\text{ k}\Omega}{1\text{ k}\Omega + 900\ \Omega}\right)12\text{ V} = 6.32\text{ V}$$

Apply the voltage-divider formula to the right side of the bridge.

$$V_B = \left(\frac{R_4}{R_2 + R_4}\right)V_S = \left(\frac{1\text{ k}\Omega}{2\text{ k}\Omega}\right)12\text{ V} = 6.00\text{ V}$$

www.EngineeringBooksPdf.com

The output voltage at 50°C is the difference between V_A and V_B.

$$V_{OUT} = V_A - V_B = 6.32\text{ V} - 6.00\text{ V} = \mathbf{0.32\text{ V}}$$

Node A is positive with respect to node B.

Related Problem If the temperature is increased to 60°C, causing the thermistor resistance in Figure 38 to decrease to 850 Ω, what is V_{OUT}?

Strain Gauge Application of the Wheatstone Bridge A Wheatstone bridge with a strain gauge can be used to measure forces. A strain gauge is a device that exhibits a change in resistance when it is compressed or stretched by the application of an external force. As the resistance of the strain gauge changes, the previously balanced bridge becomes unbalanced. This unbalance causes the output voltage to change from zero, and this change can be measured to determine the amount of strain. In strain gauges, the resistance change is extremely small. This tiny change unbalances a Wheatstone bridge and can be detected because of its high sensitivity. For example, Wheatstone bridges with strain gauges are commonly used in weight scales.

Some resistive transducers have extremely small resistance changes, and these changes are difficult to measure accurately with a direct measurement. In particular, strain gauges are one of the most useful resistive transducers that convert the stretching or compression of a fine wire into a change in resistance. When strain causes the wire in the gauge to stretch, the resistance increases a small amount and when it compresses, the resistance of the wire decreases.

Strain gauges are used in many types of scales, from those that are used for weighing small parts to those for weighing huge trucks. Typically, the gauges are mounted on a special block of aluminum that deforms when a weight is on the scale. The strain gauges are extremely delicate and must be mounted properly, so the entire assembly is generally prepared as a single unit called a *load cell.* A **load cell** is a transducer that uses strain gauges to convert mechanical force into an electrical signal. A wide variety of load cells with different shapes and sizes are available from manufacturers depending on the application. A typical S-shaped load cell for a weighing application that has four strain gauges is illustrated in Figure 39(a). The gauges are mounted so that two of the gauges stretch (tension) when a load is placed on the scale and two of the gauges compress.

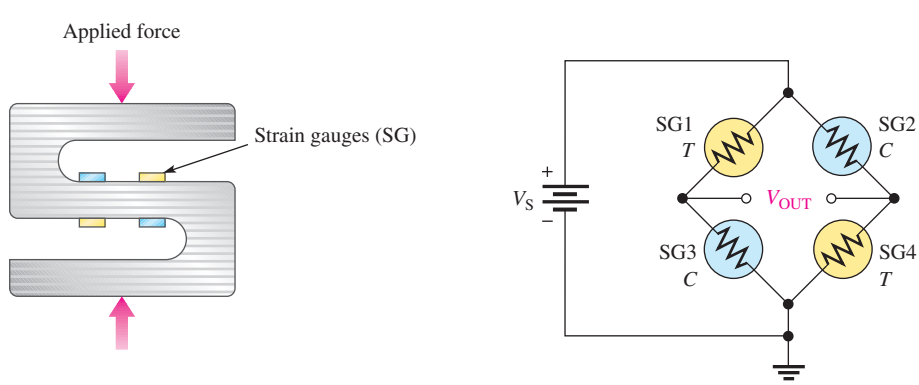

(a) A typical load cell with four active strain gauges (two compression and two tension)

(b) Wheatstone bridge

▲ **FIGURE 39**

Example of a load cell.

www.EngineeringBooksPdf.com

Load cells are usually connected to a Wheatstone bridge as shown in Figure 39(b) with strain gauges (SG) in tension (T) and compression (C) in opposite diagonal legs as shown. The output of the bridge is normally digitized and converted to a reading for a display or sent to a computer for processing. The major advantage of the Wheatstone bridge circuit is that it is capable of accurately measuring very small differences in resistance. The use of four active transducers increases the sensitivity of the measurement and makes the bridge the ideal circuit for instrumentation. The Wheatstone bridge circuit has the added benefit of compensating for temperature variations and wire resistance of connecting wires that would otherwise contribute to inaccuracies.

In addition to scales, strain gauges are used with Wheatstone bridges in other types of measurements including pressure measurements, displacement and acceleration measurements to name a few. In pressure measurements, the strain gauges are bonded to a flexible diaphragm that stretches when pressure is applied to the transducer. The amount of flexing is related to the pressure, which again converts to a very small resistance change.

SECTION 5 CHECKUP

1. Draw a basic Wheatstone bridge circuit.
2. Under what condition is a bridge balanced?
3. What is the unknown resistance in Figure 36 when $R_V = 3.3\ \text{k}\Omega$, $R_2 = 10\ \text{k}\Omega$, and $R_4 = 2.2\ \text{k}\Omega$?
4. How is a Wheatstone bridge used in the unbalanced condition?
5. What is a load cell?

6 THEVENIN'S THEOREM

Thevenin's theorem provides a method for simplifying a circuit to a standard equivalent form with respect to two output terminals. In many cases, this theorem can be used to simplify the analysis of series-parallel circuits. Another method for simplifying a circuit to an equivalent form is Norton's theorem.

After completing this section, you should be able to

- **Apply Thevenin's theorem to simplify a circuit for analysis**
  - Describe the form of a Thevenin equivalent circuit
  - Obtain the Thevenin equivalent voltage source
  - Obtain the Thevenin equivalent resistance
  - Explain terminal equivalency in the context of Thevenin's theorem
  - Thevenize a portion of a circuit
  - Thevenize a Wheatstone bridge

The Thevenin equivalent form of any two-terminal resistive circuit consists of an equivalent voltage source (V_{TH}) and an equivalent resistance (R_{TH}), arranged as shown in Figure 40. The values of the equivalent voltage and resistance depend on the values in the origi-nal circuit. Any two-terminal resistive circuit can be simplified to a Thevenin equivalent regardless of its complexity.

www.EngineeringBooksPdf.com

The equivalent voltage, V_{TH}, is one part of the complete Thevenin equivalent circuit. The other part is R_{TH}.

The Thevenin equivalent voltage (V_{TH}) is the open circuit (no-load) voltage between two specified output terminals in a circuit.

Any component connected between these two terminals effectively "sees" V_{TH} in series with R_{TH}. As defined by **Thevenin's theorem**,

The Thevenin equivalent resistance (R_{TH}) is the total resistance appearing between two specified output terminals in a circuit with all sources replaced by their internal resistances (which for an ideal voltage source is zero).

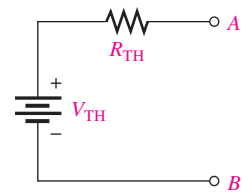

▲ FIGURE 40

The general form of a Thevenin equivalent circuit is a voltage source in series with a resistance.

Although a Thevenin equivalent circuit is not of the same form as the original circuit, it acts the same in terms of the output voltage and current. Consider the following demonstration as illustrated in Figure 41. A resistive circuit of any complexity is placed in a box with only the output terminals exposed. The Thevenin equivalent of that circuit is placed in an identical box with, again, only the output terminals exposed. Identical load resistors are connected across the output terminals of each box. Next, a voltmeter and an ammeter are connected to measure the voltage and current for each load as shown in the figure. The measured values will be identical (neglecting tolerance variations), and you will not be able to determine which box contains the original circuit and which contains the Thevenin equivalent of the original circuit. That is, in terms of what you can observe by electrical measurement, both circuits appear to be the same. This condition is sometimes known as **terminal equivalency** because both circuits look the same from the "viewpoint" of the two output terminals.

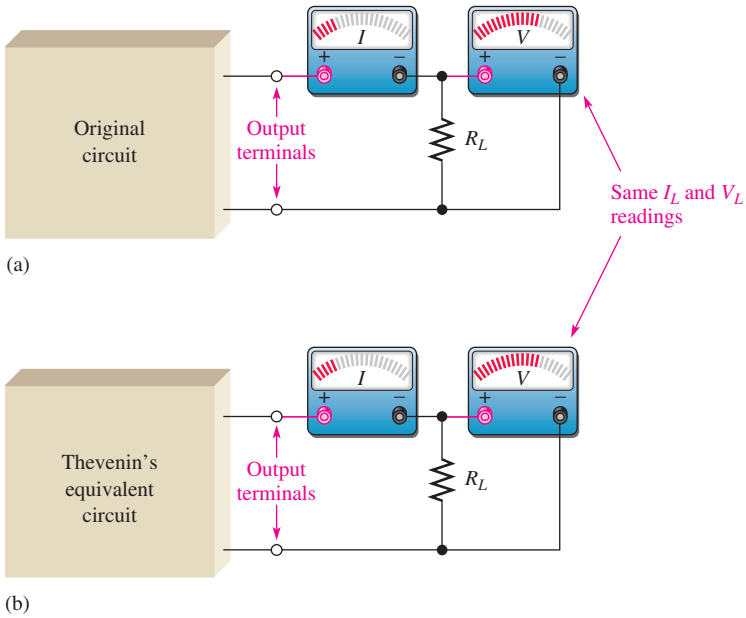

▲ FIGURE 41

Which box contains the original circuit and which contains the Thevenin equivalent circuit? You cannot tell by observing the meters because the circuits have terminal equivalency.

HISTORY NOTE

Léon Charles Thévenin
1857–1926

Thevenin was a French telegraph engineer who became increasingly interested in the problems of measurement in electrical circuits. As a result of studying Kirchhoff's circuit laws and Ohm's law, in 1882 he developed a method, now known as Thévenin's theorem, which made it possible to analyze a complex electrical circuit by reducing it to a simple equivalent circuit.

To find the Thevenin equivalent of any circuit, you must determine the equivalent voltage, V_{TH}, and the equivalent resistance, R_{TH}. For example, the Thevenin equivalent for the circuit between output terminals A and B is developed in Figure 42.

www.EngineeringBooksPdf.com

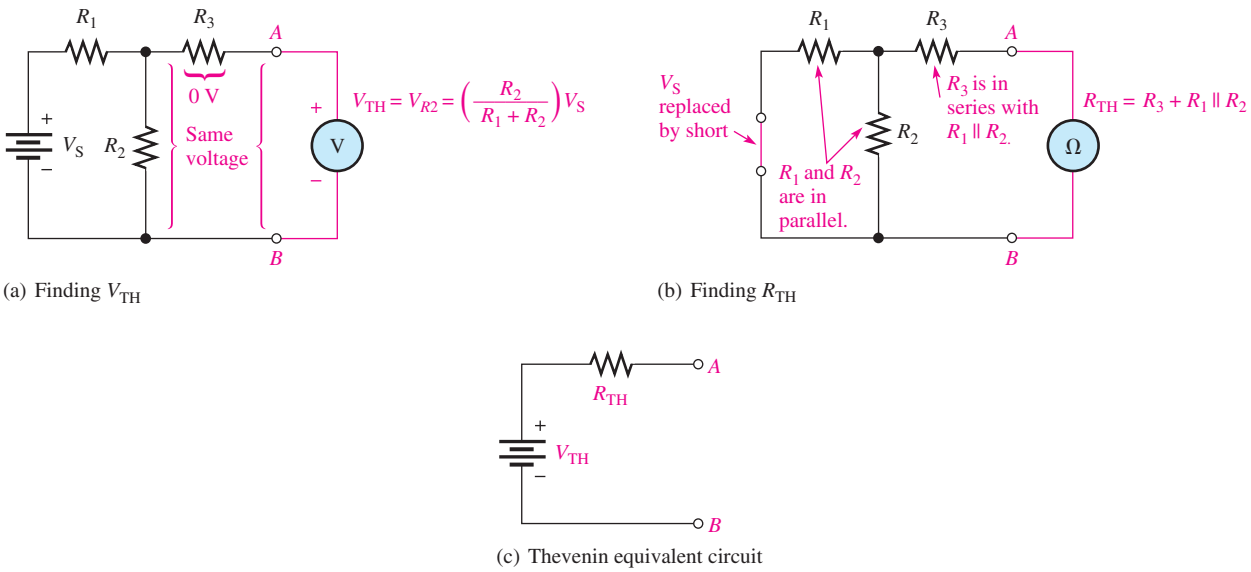

▲ **FIGURE 42**

Example of the simplification of a circuit by Thevenin's theorem.

In Figure 42(a), the voltage across the designated terminals A and B is the Thevenin equivalent voltage. In this particular circuit, the voltage from A to B is the same as the voltage across R_2 because there is no current through R_3 and, therefore, no voltage drop across it. V_{TH} is expressed as follows for this particular example:

$$V_{TH} = \left(\frac{R_2}{R_1 + R_2}\right)V_S$$

In Figure 42(b), the resistance between terminals A and B with the source replaced by a short to represent its zero internal resistance is the Thevenin equivalent resistance. In this particular circuit, the resistance from A to B is R_3 in series with the parallel combination of R_1 and R_2. Therefore, R_{TH} is expressed as follows:

$$R_{TH} = R_3 + \frac{R_1R_2}{R_1 + R_2}$$

The Thevenin equivalent circuit is shown in Figure 42(c).

EXAMPLE 16

Find the Thevenin equivalent circuit between the output terminals A and B of the circuit in Figure 43. If there were a load resistance connected across terminals A and B, it would first have to be removed.

▶ **FIGURE 43**

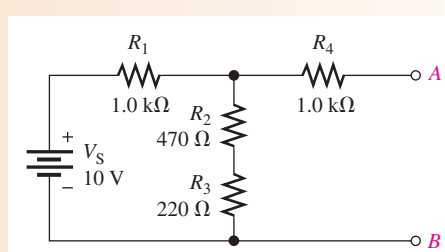

www.EngineeringBooksPdf.com

Solution Since there is no voltage drop across R_4, V_{AB}, equals the voltage across $R_2 + R_3$ and $V_{TH} = V_{AB}$, as shown in Figure 44(a). Use the voltage-divider principle to find V_{TH}.

$$V_{TH} = \left(\frac{R_2 + R_3}{R_1 + R_2 + R_3}\right)V_S = \left(\frac{690\ \Omega}{1.69\ \text{k}\Omega}\right)10\ \text{V} = \mathbf{4.08\ V}$$

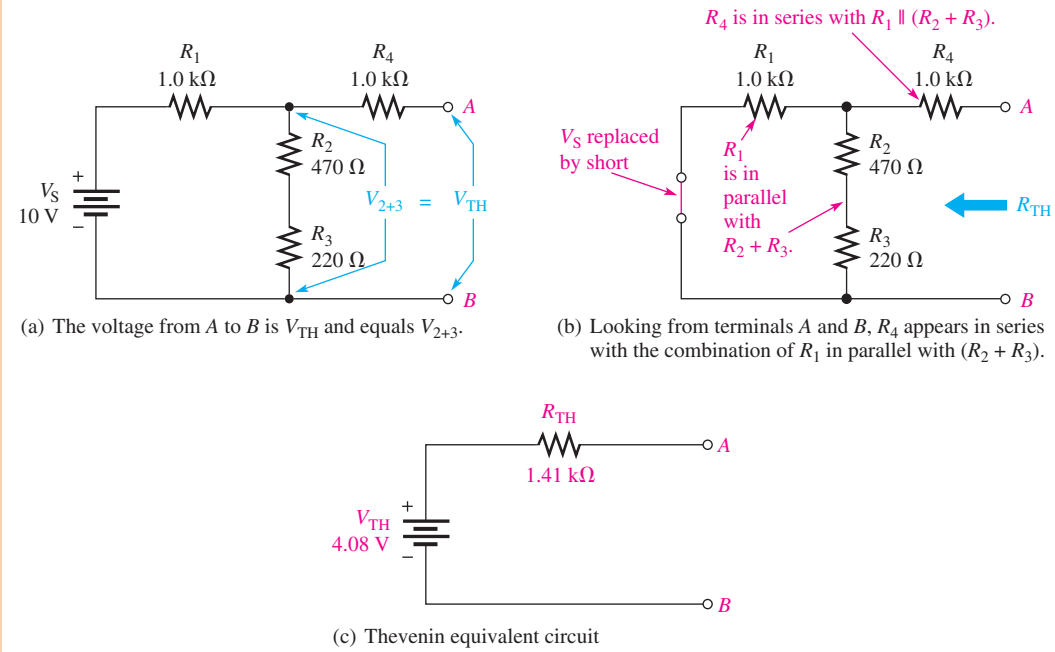

(a) The voltage from A to B is V_{TH} and equals V_{2+3}.

(b) Looking from terminals A and B, R_4 appears in series with the combination of R_1 in parallel with $(R_2 + R_3)$.

(c) Thevenin equivalent circuit

▲ **FIGURE 44**

To find R_{TH}, first replace the source with a short to simulate a zero internal resistance. Then R_1 appears in parallel with $R_2 + R_3$, and R_4 is in series with the series-parallel combination of R_1, R_2, and R_3 as indicated in Figure 44(b).

$$R_{TH} = R_4 + \frac{R_1(R_2 + R_3)}{R_1 + R_2 + R_3} = 1.0\ \text{k}\Omega + \frac{(1.0\ \Omega)(690\ \Omega)}{1.69\ \text{k}\Omega} = \mathbf{1.41\ k\Omega}$$

The resulting Thevenin equivalent circuit is shown in Figure 44(c).

Related Problem Determine V_{TH} and R_{TH} if a 560 Ω resistor is connected in parallel across R_2 and R_3 in Figure 43.

Thevenin Equivalency Depends on the Viewpoint

The Thevenin equivalent for any circuit depends on the location of the two output terminals from which the circuit is "viewed." In Figure 43, you viewed the circuit from between the two terminals labeled A and B. Any given circuit can have more than one Thevenin equivalent, depending on how the output terminals are designated. For example, if you view the circuit in Figure 45 from between terminals A and C, you obtain a completely different result than if you view it from between terminals A and B or from between terminals B and C.

In Figure 46(a), when viewed from between terminals A and C, V_{TH} is the voltage across $R_2 + R_3$ and can be expressed using the voltage-divider formula as

$$V_{TH(AC)} = \left(\frac{R_2 + R_3}{R_1 + R_2 + R_3}\right)V_S$$

www.EngineeringBooksPdf.com

▶ FIGURE 45

Thevenin's equivalent depends on the output terminals from which the circuit is viewed.

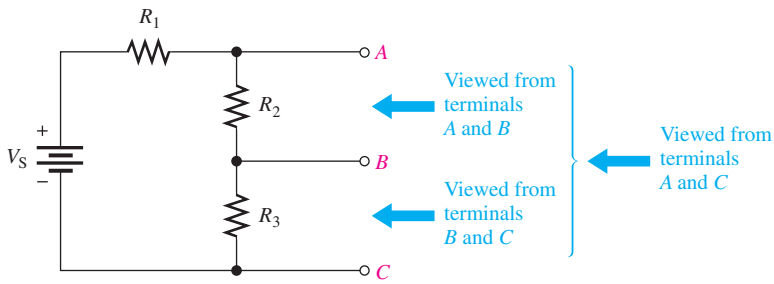

▶ FIGURE 46

Example of a circuit thevenized from two different sets of terminals. Parts (a), (b), and (c) illustrate one set of terminals and parts (d), (e), and (f) illustrate another set of terminals. (The V_{TH} and R_{TH} values are different for each case.)

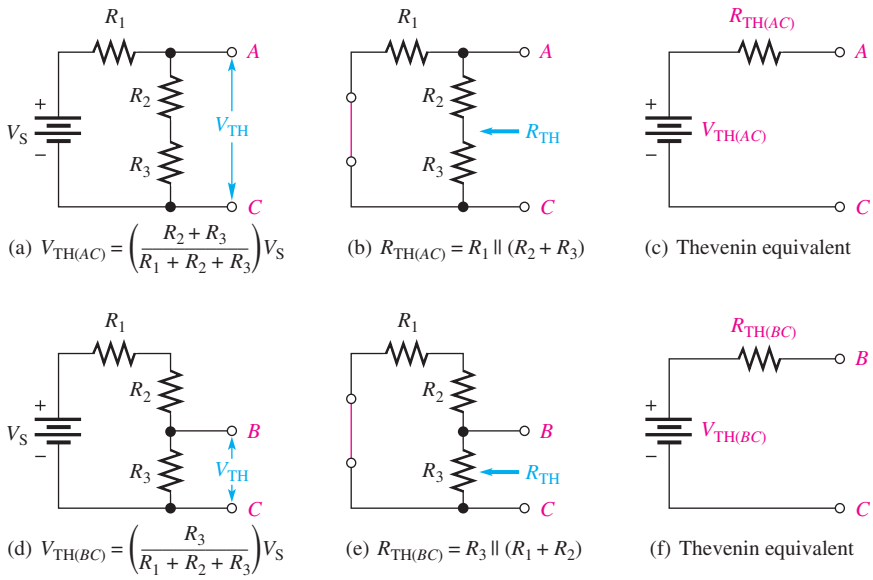

Also, as shown in Figure 46(b), the resistance between terminals A and C is $R_2 + R_3$ in parallel with R_1 (the source is replaced by a short) and can be expressed as

$$R_{TH(AC)} = R_1 \parallel (R_2 + R_3) = \frac{R_1(R_2 + R_3)}{R_1 + R_2 + R_3}$$

The resulting Thevenin equivalent circuit is shown in Figure 46(c).

When viewed from between terminals B and C as indicated in Figure 46(d), $V_{TH(BC)}$ is the voltage across R_3 and can be expressed as

$$V_{TH(BC)} = \left(\frac{R_3}{R_1 + R_2 + R_3}\right)V_S$$

As shown in Figure 46(e), the resistance between terminals B and C is R_3 in parallel with the series combination of R_1 and R_2.

$$R_{TH(BC)} = R_3 \parallel (R_1 + R_2) = \frac{R_3(R_1 + R_2)}{R_1 + R_2 + R_3}$$

The resulting Thevenin equivalent is shown in Figure 46(f).

EXAMPLE 17

(a) Determine the Thevenin equivalent circuit for the circuit in Figure 47 viewed from terminals A and C.

(b) Determine the Thevenin equivalent circuit for the circuit in Figure 47 viewed from terminals B and C.

www.EngineeringBooksPdf.com

▶ FIGURE 47

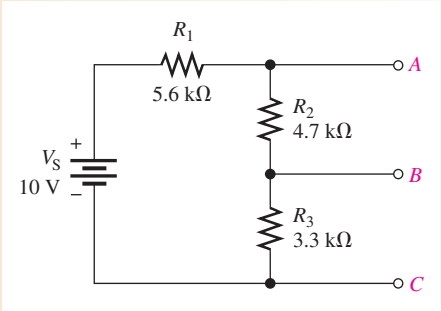

Solution

(a) $V_{TH(AC)} = \left(\dfrac{R_2 + R_3}{R_1 + R_2 + R_3}\right)V_S = \left(\dfrac{4.7\,\text{k}\Omega + 3.3\,\text{k}\Omega}{5.6\,\text{k}\Omega + 4.7\,\text{k}\Omega + 3.3\,\text{k}\Omega}\right)10\text{ V} = \mathbf{5.88\ V}$

$R_{TH(AC)} = R_1 \parallel (R_2 + R_3) = 5.6\,\text{k}\Omega \parallel (4.7\,\text{k}\Omega + 3.3\,\text{k}\Omega) = \mathbf{3.29\ k\Omega}$

The Thevenin equivalent circuit is shown in Figure 48(a).

(b) $V_{TH(BC)} = \left(\dfrac{R_3}{R_1 + R_2 + R_3}\right)V_S = \left(\dfrac{3.3\,\text{k}\Omega}{5.6\,\text{k}\Omega + 4.7\,\text{k}\Omega + 3.3\,\text{k}\Omega}\right)10\text{ V} = \mathbf{2.43\ V}$

$R_{TH(BC)} = R_3 \parallel (R_1 + R_2) = 3.3\,\text{k}\Omega \parallel (5.6\,\text{k}\Omega + 4.7\,\text{k}\Omega) = \mathbf{2.5\ k\Omega}$

The Thevenin equivalent circuit is shown in Figure 48(b).

▶ FIGURE 48

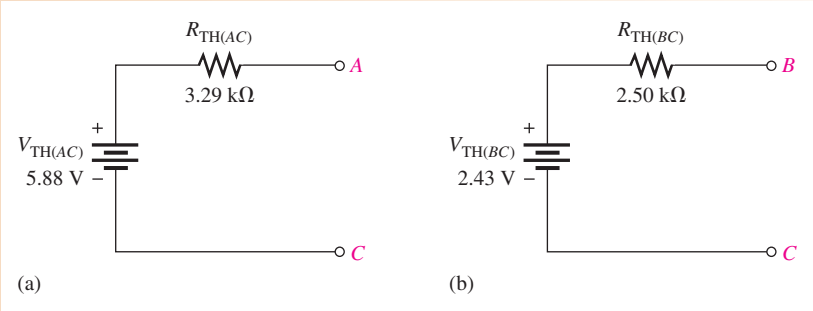

Related Problem Determine the Thevenin equivalent circuit viewed from terminals *A* and *B* in Figure 47.

Thevenizing a Bridge Circuit

The usefulness of Thevenin's theorem can be illustrated when it is applied to a Wheatstone bridge circuit. For example, consider the case when a load resistor is connected to the output terminals of a Wheatstone bridge, as shown in Figure 49. The bridge circuit is difficult to analyze because it is not a straightforward series-parallel arrangement when a load resistance is connected between the output terminals *A* and *B*. There are no resistors that are in series or in parallel with another resistor.

Using Thevenin's theorem, you can simplify the bridge circuit to an equivalent circuit viewed from the load resistor as shown step-by-step in Figure 50. Study carefully the steps in this figure. Once the equivalent circuit for the bridge is found, the voltage and current for any value of load resistor can easily be determined by Ohm's law.

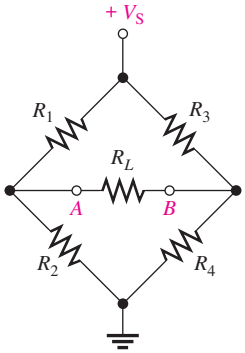

▲ FIGURE 49

A Wheatstone bridge with a load resistor connected between the output terminals is not a straightforward series-parallel circuit.

www.EngineeringBooksPdf.com

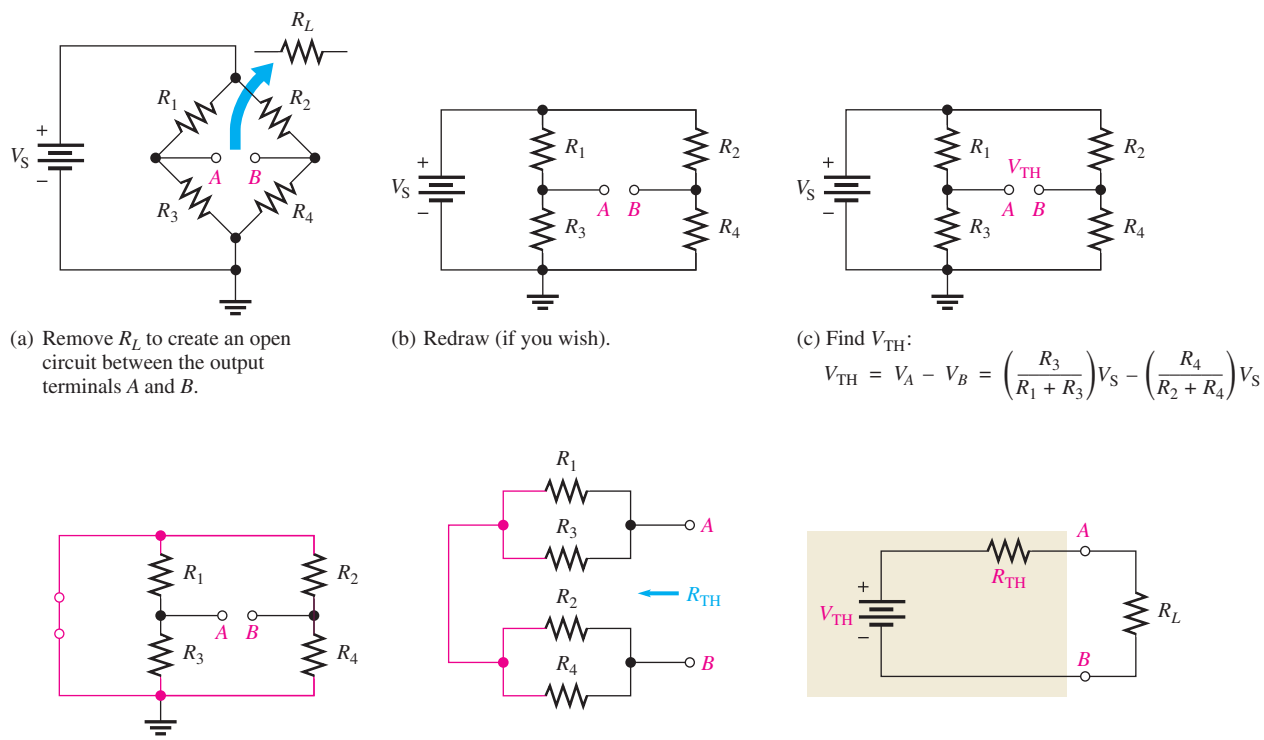

(a) Remove R_L to create an open circuit between the output terminals A and B.

(b) Redraw (if you wish).

(c) Find V_{TH}:

$$V_{TH} = V_A - V_B = \left(\frac{R_3}{R_1 + R_3}\right)V_S - \left(\frac{R_4}{R_2 + R_4}\right)V_S$$

(d) Replace V_S with a short to represent its zero internal resistance. *Note*: The red lines represent the same electrical point as the red lines in Part (e).

(e) Redraw (if you wish) and find R_{TH}:

$$R_{TH} = R_1 \parallel R_3 + R_2 \parallel R_4$$

(f) Thevenin's equivalent circuit (beige block) with R_L reconnected

▲ **FIGURE 50**

Simplifying a Wheatstone bridge with Thevenin's theorem.

EXAMPLE 18

Determine the voltage and current for the load resistor, R_L, in the bridge circuit of Figure 51.

▶ **FIGURE 51**

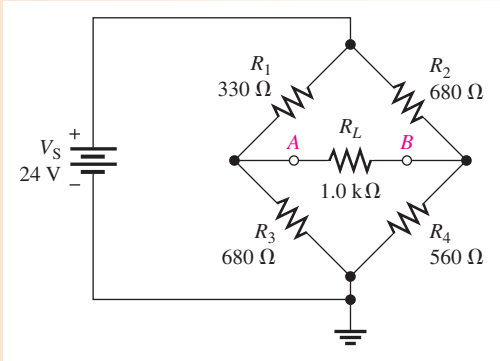

Solution

Step 1: Remove R_L to create an open circuit between A and B.

Step 2: To thevenize the bridge as viewed from between terminals A and B, as was shown in Figure 50, first determine V_{TH}.

$$V_{TH} = V_A - V_B = \left(\frac{R_3}{R_1 + R_3}\right)V_S - \left(\frac{R_4}{R_2 + R_4}\right)V_S$$

$$= \left(\frac{680\ \Omega}{1010\ \Omega}\right)24\ \text{V} - \left(\frac{560\ \Omega}{1240\ \Omega}\right)24\ \text{V} = 16.16\ \text{V} - 10.84\ \text{V} = 5.32\ \text{V}$$

www.EngineeringBooksPdf.com

Step 3: Determine R_{TH}.

$$R_{TH} = \frac{R_1R_3}{R_1 + R_3} + \frac{R_2R_4}{R_2 + R_4}$$

$$= \frac{(330\ \Omega)(680\ \Omega)}{1010\ \Omega} + \frac{(680\ \Omega)(560\ \Omega)}{1240\ \Omega} = 222\ \Omega + 307\ \Omega = 529\ \Omega$$

Step 4: Place V_{TH} and R_{TH} in series to form the Thevenin equivalent circuit.

Step 5: Connect the load resistor from terminals A to B of the equivalent circuit, and determine the load voltage and current as illustrated in Figure 52.

$$V_L = \left(\frac{R_L}{R_L + R_{TH}}\right)V_{TH} = \left(\frac{1.0\ \text{k}\Omega}{1.529\ \text{k}\Omega}\right)5.32\ \text{V} = \mathbf{3.48\ V}$$

$$I_L = \frac{V_L}{R_L} = \frac{3.48\ \text{V}}{1.0\ \text{k}\Omega} = \mathbf{3.48\ mA}$$

▶ FIGURE 52

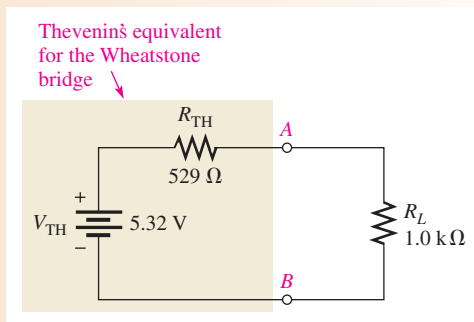

Related Problem Calculate I_L for $R_1 = 2.2\ \text{k}\Omega$, $R_2 = 3.9\ \text{k}\Omega$, $R_3 = 3.3\ \text{k}\Omega$, and $R_4 = 2.7\ \text{k}\Omega$ in Figure 51.

Open Multisim file E06-18. Determine the voltage and current for R_L using a multimeter. Change the resistor values to those specified in the related problem and measure the voltage and current for R_L.

Summary of Thevenin's Theorem

Remember, the Thevenin equivalent circuit for any resistive circuit is *always* an equivalent voltage source in series with an equivalent resistance regardless of the original circuit that it replaces. The significance of Thevenin's theorem is that the equivalent circuit can replace the original circuit as far as any external load is concerned. Any load resistor connected between the terminals of a Thevenin equivalent circuit will have the same current through it and the same voltage across it as if it were connected to the terminals of the original circuit.

A summary of steps for applying Thevenin's theorem is as follows:

Step 1: Open the two terminals (remove any load) between which you want to find the Thevenin equivalent circuit.

Step 2: Determine the voltage (V_{TH}) across the two open terminals.

Step 3: Determine the resistance (R_{TH}) between the two terminals with all sources replaced by their internal resistance. (An ideal voltage source is replaced by a short.)

Step 4: Connect V_{TH} and R_{TH} in series to produce the complete Thevenin equivalent for the original circuit.

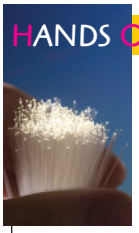

HANDS ON TIP

The Thevenin resistance of a circuit can be measured by connecting a variable resistance on the output of the circuit and adjusting the resistance until the output voltage of the circuit is one-half of its open circuit value. Now, if you remove the variable resistance and measure it, the value equals the Thevenin equivalent resistance of the circuit.

www.EngineeringBooksPdf.com

Step 5: Replace the load removed in Step 1 across the terminals of the Thevenin equivalent circuit. You can now calculate the load current and load voltage using only Ohm's law, and they have the same value as the load current and load voltage in the original circuit.

Two additional theorems are sometimes used in circuit analysis. One of these is Norton's theorem, which is similar to Thevenin's theorem except that it deals with current sources instead of voltage sources. The other is Millman's theorem, which deals with parallel voltage sources.

SECTION 6 CHECKUP

1. What are the two components of a Thevenin equivalent circuit?
2. Draw the general from of a Thevenin equivalent circuit.
3. Define V_{TH}.
4. Define R_{TH}.
5. For the original circuit in Figure 53, determine the Thevenin equivalent circuit as viewed from the output terminals *A* and *B*.

▶ FIGURE 53

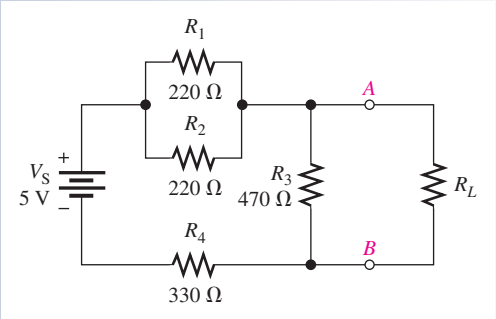

7 THE MAXIMUM POWER TRANSFER THEOREM

The maximum power transfer theorem is important when you need to know the value of the load at which the most power is delivered from the source.

After completing this section, you should be able to

- **Apply the maximum power transfer theorem**
  - State the theorem
  - Determine the value of load resistance for which maximum power is transferred from a given circuit

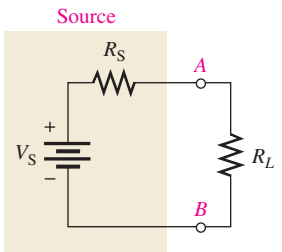

▲ FIGURE 54

Maximum power is transferred to the load when $R_L = R_S$.

The **maximum power transfer** theorem is stated as follows:

For a given source voltage, maximum power is transferred from a source to a load when the load resistance is equal to the internal source resistance.

The source resistance, R_S, of a circuit is the equivalent resistance as viewed from the output terminals using Thevenin's theorem. A Thevenin equivalent circuit with its output resistance and load is shown in Figure 54. When $R_L = R_S$, the maximum power possible is transferred from the voltage source to R_L for a given value of V_S.

Practical applications of the maximum power transfer theorem include audio systems such as stereo, radio, and public address. In these systems the resistance of the speaker is the load. The circuit that drives the speaker is a power amplifier. The systems are typically

www.EngineeringBooksPdf.com

optimized for maximum power to the speakers. Thus, the resistance of the speaker must equal the internal source resistance of the amplifier.

Example 19 shows that maximum power occurs when $R_L = R_S$.

EXAMPLE 19

The source in Figure 55 has an internal resistance of 75 Ω. Determine the load power for each of the following values of the variable load resistance:

(a) 0 Ω **(b)** 25 Ω **(c)** 50 Ω

(d) 75 Ω **(e)** 100 Ω **(f)** 125 Ω

Draw a graph showing the load power versus the load resistance.

▶ **FIGURE 55**

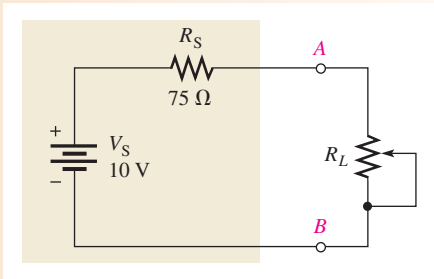

Solution Use Ohm's law ($I = V/R$) and the power formula ($P = I^2R$) to find the load power, P_L, for each value of load resistance.

(a) For $R_L = 0\ \Omega$,

$$I = \frac{V_S}{R_S + R_L} = \frac{10\text{V}}{75\ \Omega + 0\ \Omega} = 133\text{ mA}$$

$$P_L = I^2R_L = (133\text{ mA})^2(0\ \Omega) = \mathbf{0\ mW}$$

(b) For $R_L = 25\ \Omega$,

$$I = \frac{V_S}{R_S + R_L} = \frac{10\text{ V}}{75\ \Omega + 25\ \Omega} = 100\text{ mA}$$

$$P_L = I^2R_L = (100\text{ mA})^2(25\ \Omega) = \mathbf{250\ mW}$$

(c) For $R_L = 50\ \Omega$,

$$I = \frac{V_S}{R_S + R_L} = \frac{10\text{ V}}{125\ \Omega} = 80\text{ mA}$$

$$P_L = I^2R_L = (80\text{ mA})^2(50\ \Omega) = \mathbf{320\ mW}$$

(d) For $R_L = 75\ \Omega$,

$$I = \frac{V_S}{R_S + R_L} = \frac{10\text{ V}}{150\ \Omega} = 66.7\text{ mA}$$

$$P_L = I^2R_L = (66.7\text{ mA})^2(75\ \Omega) = \mathbf{334\ mW}$$

(e) For $R_L = 100\ \Omega$,

$$I = \frac{V_S}{R_S + R_L} = \frac{10\text{ V}}{175\ \Omega} = 57.1\text{ mA}$$

$$P_L = I^2R_L = (57.1\text{ mA})^2(100\ \Omega) = \mathbf{326\ mW}$$

www.EngineeringBooksPdf.com

(f) For $R_L = 125\ \Omega$,

$$I = \frac{V_S}{R_S + R_L} = \frac{10\text{ V}}{200\ \Omega} = 50\text{ mA}$$

$$P_L = I^2R_L = (50\text{ mA})^2(125\ \Omega) = \mathbf{313\ mW}$$

Notice that the load power is greatest when $R_L = R_S = 75\ \Omega$, which is the same as the internal source resistance. When the load resistance is less than or greater than this value, the power drops off, as the curve in Figure 56 graphically illustrates.

▶ **FIGURE 56**

Curve showing that the load power is maximum when $R_L = R_S$.

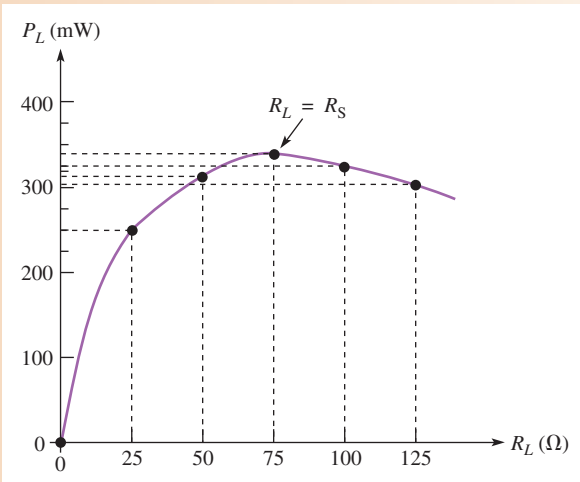

Related Problem If the source resistance in Figure 55 is 600 Ω, what is the maximum power that can be delivered to a load?

SECTION 7 CHECKUP

1. State the maximum power transfer theorem.
2. When is maximum power delivered from a source to a load?
3. A given circuit has an internal source resistance of 50 Ω. What will be the value of the load to which the maximum power is delivered?

8 THE SUPERPOSITION THEOREM

Some circuits require more than one voltage or current source. For example, most amplifiers operate with two voltage sources: an ac and a dc source. Additionally, some amplifiers require both a positive and a negative dc voltage source for proper operation. When multiple sources are used in a circuit, the superposition theorem provides a method for analysis.

After completing this section, you should be able to

- **Apply the superposition theorem to circuit analysis**
  - State the superposition theorem
  - List the steps in applying the theorem

www.EngineeringBooksPdf.com

The **superposition** theorem is a way to determine currents in a circuit with multiple sources by leaving one source at a time and replacing the other sources by their internal resistances. Recall that the ideal voltage source has a zero internal resistance and the ideal current source has infinite internal resistance. All sources will be treated as ideal in order to simplify the coverage.

A general statement of the superposition theorem is as follows:

The current in any given branch of a multiple-source linear circuit can be found by determining the currents in that particular branch produced by each source acting alone, with all other sources replaced by their internal resistances. The total current in the branch is the algebraic sum of the individual source currents in that branch.

The steps in applying the superposition theorem are as follows:

Step 1: Leave one voltage (or current) source at a time in the circuit and replace each of the other voltage (or current) sources with its internal resistance. For ideal sources, a short represents zero internal resistance and an open represents infinite internal resistance.

Step 2: Determine the particular current (or voltage) that you want to find just as if there were only one source in the circuit. This is a component of the total current or voltage that you are looking for.

Step 3: Take the next source in the circuit and repeat Steps 1 and 2 for each source.

Step 4: To find the actual current in a given branch (with all sources active), algebraically add the results for all sources. Once you find this current, you can determine the voltage using Ohm's law.

The approach to superposition is illustrated in Figure 57 for a series-parallel circuit with two ideal voltage sources. Study the steps in this figure.

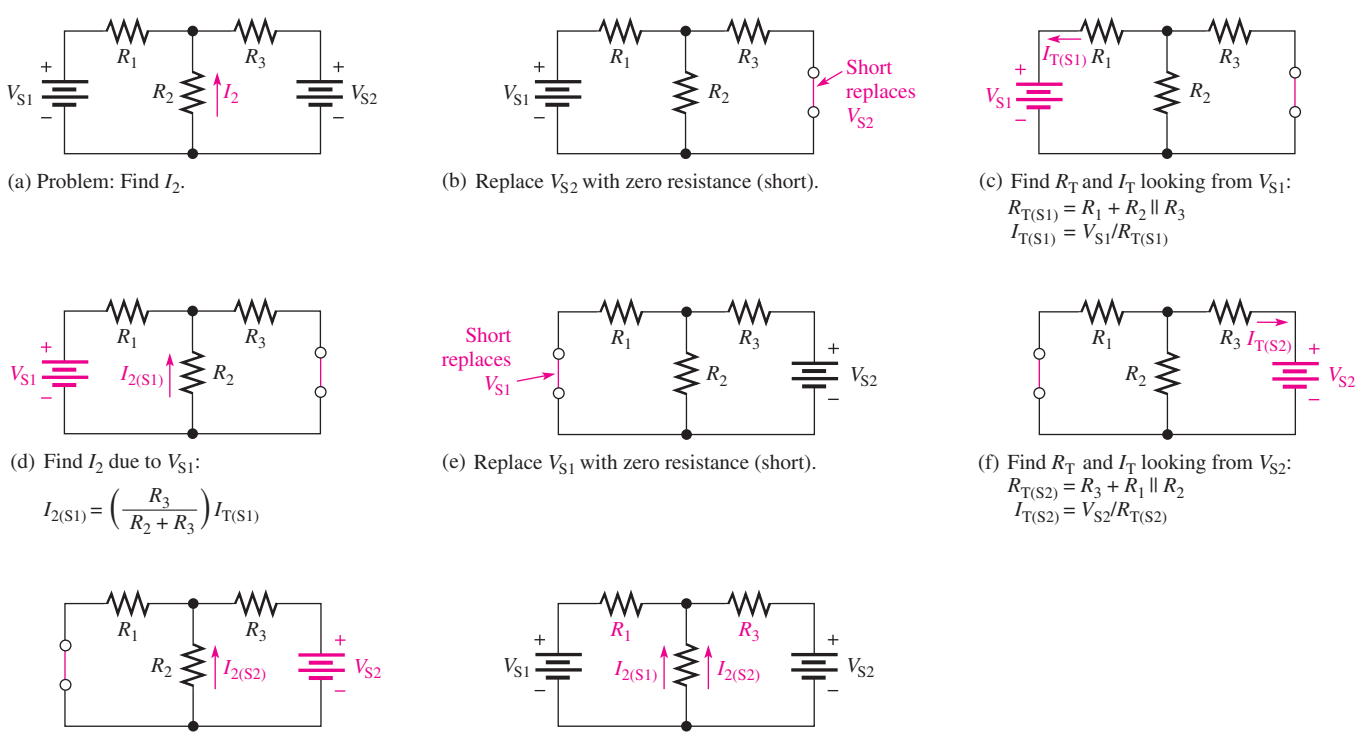

(a) Problem: Find I_2.

(b) Replace V_{S2} with zero resistance (short).

(c) Find R_T and I_T looking from V_{S1}:
$R_{T(S1)} = R_1 + R_2 \parallel R_3$
$I_{T(S1)} = V_{S1}/R_{T(S1)}$

(d) Find I_2 due to V_{S1}:
$$I_{2(S1)} = \left(\frac{R_3}{R_2 + R_3}\right) I_{T(S1)}$$

(e) Replace V_{S1} with zero resistance (short).

(f) Find R_T and I_T looking from V_{S2}:
$R_{T(S2)} = R_3 + R_1 \parallel R_2$
$I_{T(S2)} = V_{S2}/R_{T(S2)}$

(g) Find I_2 due to V_{S2}:
$$I_{2(S2)} = \left(\frac{R_1}{R_1 + R_2}\right) I_{T(S2)}$$

(h) Restore the original sources. Algebraically add $I_{2(S1)}$ and $I_{2(S2)}$ to get the actual I_2 (they are in same direction):
$I_2 = I_{2(S1)} + I_{2(S2)}$

▲ **FIGURE 57**

Illustration of the superposition theorem.

www.EngineeringBooksPdf.com

EXAMPLE 20

Use the superposition theorem to find the current through R_2 and the voltage across it in Figure 58.

▶ FIGURE 58

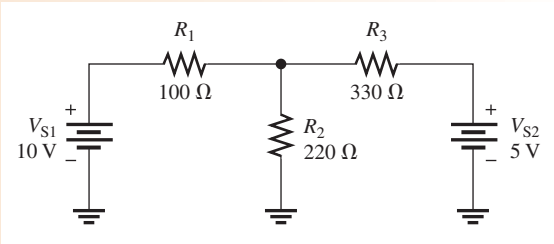

Solution

Step 1: Replace V_{S2} with a short to represent its zero internal resistance and find the current through R_2 due to voltage source V_{S1}, as shown in Figure 59. To find I_2, use the current-divider formula. Looking from V_{S1},

$$R_{T(S1)} = R_1 + R_2 \parallel R_3 = 100\,\Omega + 220\,\Omega \parallel 330\,\Omega = 232\,\Omega$$

$$I_{T(S1)} = \frac{V_{S1}}{R_{T(S1)}} = \frac{10\text{ V}}{232\,\Omega} = 43.1\text{ mA}$$

The component of the total current through R_2 due to V_{S1} is

$$I_{2(S1)} = \left(\frac{R_3}{R_2 + R_3}\right)I_{T(S1)} = \left(\frac{330\,\Omega}{220\,\Omega + 330\,\Omega}\right)43.1\text{ mA} = 25.9\text{ mA}$$

Note that this current is upward through R_2.

▶ FIGURE 59

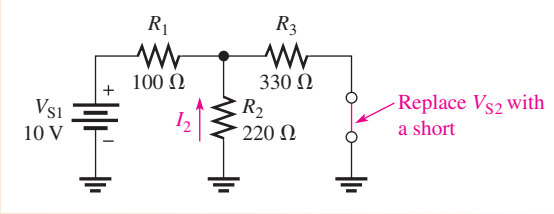

Step 2: Find the current through R_2 due to voltage source V_{S2} by replacing V_{S1} with a short, as shown in Figure 60. Looking from V_{S2},

$$R_{T(S2)} = R_3 + R_1 \parallel R_2 = 330\,\Omega + 100\,\Omega \parallel 220\,\Omega = 399\,\Omega$$

$$I_{T(S2)} = \frac{V_{S2}}{R_{T(S2)}} = \frac{5\text{ V}}{399\,\Omega} = 12.5\text{ mA}$$

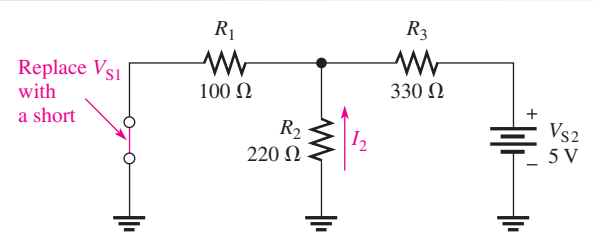

▲ FIGURE 60

www.EngineeringBooksPdf.com

The component of the total current through R_2 due to V_{S2} is

$$I_{2(S2)} = \left(\frac{R_1}{R_1 + R_2}\right)I_{T(S2)} = \left(\frac{100\ \Omega}{100\ \Omega + 220\ \Omega}\right)12.5\ \text{mA} = 3.90\ \text{mA}$$

Note that this current is upward through R_2.

Step 3: Both component currents are upward through R_2, so they have the same algebraic sign. Therefore, add the values to get the total current through R_2.

$$I_{2(tot)} = I_{2(S1)} + I_{2(S2)} = 25.9\ \text{mA} + 3.90\ \text{mA} = \mathbf{29.8\ mA}$$

The voltage across R_2 is

$$V_{R2} = I_{2(tot)}R_2 = (29.8\ \text{mA})(220\ \Omega) = \mathbf{6.56\ V}$$

Related Problem Determine the total current through R_2 if the polarity of V_{S2} in Figure 58 is reversed.

EXAMPLE 21

Find the total current through and voltage across R_3 in Figure 61.

▶ FIGURE 61

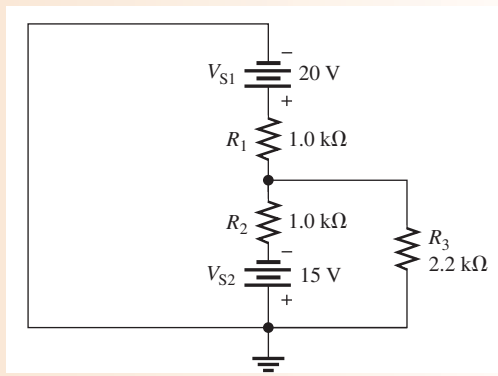

Solution **Step 1:** Find the current through R_3 due to source V_{S1} by replacing source V_{S2} with a short to represent its zero internal resistance, as shown in Figure 62. Looking from V_{S1},

$$R_{T(S1)} = R_1 + \frac{R_2R_3}{R_2 + R_3} = 1.0\ \text{k}\Omega + \frac{(1.0\ \text{k}\Omega)(2.2\ \text{k}\Omega)}{3.2\ \text{k}\Omega} = 1.69\ \text{k}\Omega$$

$$I_{T(S1)} = \frac{V_{S1}}{R_{T(S1)}} = \frac{20\ \text{V}}{1.69\ \text{k}\Omega} = 11.8\ \text{mA}$$

▶ FIGURE 62

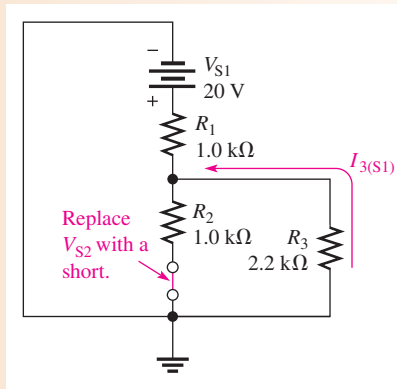

www.EngineeringBooksPdf.com

Now apply the current-divider formula to get the current through R_3 due to source V_{S1}.

$$I_{3(S1)} = \left(\frac{R_2}{R_2 + R_3}\right)I_{T(S1)} = \left(\frac{1.0\,\text{k}\Omega}{3.2\,\text{k}\Omega}\right)11.8\,\text{mA} = 3.69\,\text{mA}$$

Notice that this current is upward through R_3.

Step 2: Find the current through R_3 due to source V_{S2} by replacing source V_{S1} with a short, as shown in Figure 63. Looking from V_{S2},

$$R_{T(S2)} = R_2 + \frac{R_1R_3}{R_1 + R_3} = 1.0\,\text{k}\Omega + \frac{(1.0\,\text{k}\Omega)(2.2\,\text{k}\Omega)}{3.2\,\text{k}\Omega} = 1.69\,\text{k}\Omega$$

$$I_{T(S2)} = \frac{V_{S2}}{R_{T(S2)}} = \frac{15\,\text{V}}{1.69\,\text{k}\Omega} = 8.88\,\text{mA}$$

Now apply the current-divider formula to find the current through R_3 due to source V_{S2}.

$$I_{3(S2)} = \left(\frac{R_1}{R_1 + R_3}\right)I_{T(S2)} = \left(\frac{1.0\,\text{k}\Omega}{3.2\,\text{k}\Omega}\right)8.88\,\text{mA} = 2.78\,\text{mA}$$

Notice that this current is downward through R_3.

▶ **FIGURE 63**

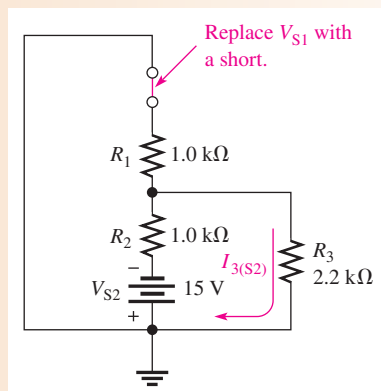

Step 3: Calculate the total current through R_3 and the voltage across it.

$$I_{3(tot)} = I_{3(S1)} - I_{3(S2)} = 3.69\,\text{mA} - 2.78\,\text{mA} = 0.91\,\text{mA} = \mathbf{910\,\mu A}$$

$$V_{R3} = I_{3(tot)}R_3 = (910\,\mu\text{A})(2.2\,\text{k}\Omega) \cong \mathbf{2\,V}$$

The current is upward through R_3.

Related Problem Find the total current through R_3 in Figure 61 if V_{S1} is changed to 12 V and its polarity reversed.

Although regulated dc power supplies are close to ideal voltage sources, many ac sources are not. For example, function generators generally have 50 Ω or 600 Ω of internal resistance, which appears as a resistance in series with an ideal source. Also, batteries can look ideal when they are fresh, but as they age, the internal resistance increases. When applying the superposition theorem, it is important to recognize when a source is not ideal and replace it with its equivalent internal resistance.

Current sources are not as common as voltage sources and are also not always ideal. If a current source is not ideal, as in the case of transistors, it should be replaced by its equivalent internal resistance when the superposition theorem is applied.

www.EngineeringBooksPdf.com

SECTION 8 CHECKUP

1. State the superposition theorem.
2. Why is the superposition theorem useful for analysis of multiple-source linear circuits?
3. Why is an ideal voltage source shorted when the superposition theorem is applied?
4. If, as a result of applying the superposition theorem, two component currents are in opposing directions through a branch of a circuit, in which direction is the net current?

9 TROUBLESHOOTING

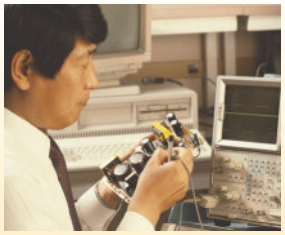

Troubleshooting is the process of identifying and locating a failure or problem in a circuit. Some troubleshooting techniques and the application of logical thought have already been discussed in relation to both series circuits and parallel circuits. A basic premise of troubleshooting is that you must know what to look for before you can successfully troubleshoot a circuit.

After completing this section, you should be able to

- **Troubleshoot series-parallel circuits**
  - Determine the effects of an open in a circuit
  - Determine the effects of a short in a circuit
  - Locate opens and shorts

Opens and shorts are typical problems that occur in electric circuits. If a resistor burns out, it will normally produce an open. Bad solder connections, broken wires, and poor contacts can also be causes of open paths. Pieces of foreign material, such as solder splashes, broken insulation on wires, and so on, can lead to shorts in a circuit. A short is considered to be a zero resistance path between two points.

In addition to complete opens or shorts, partial opens or partial shorts can develop in a circuit. A partial open would be a much higher than normal resistance, but not infinitely large. A partial short would be a much lower than normal resistance, but not zero.

The following three examples illustrate troubleshooting series-parallel circuits.

EXAMPLE 22

From the indicated voltmeter reading in Figure 64, determine if there is a fault by applying the APM approach. If there is a fault, identify it as either a short or an open.

▶ FIGURE 64

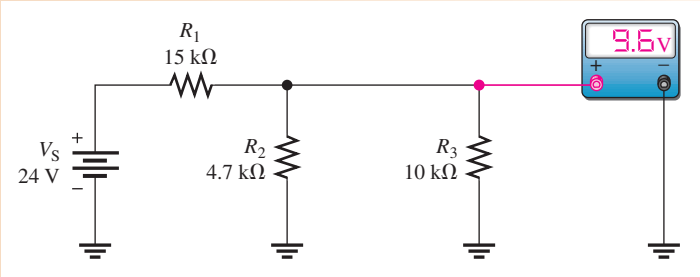

www.EngineeringBooksPdf.com

Solution **Step 1:** Analysis

Determine what the voltmeter should be indicating as follows. Since R_2 and R_3 are in parallel, their combined resistance is

$$R_{2\|3} = \frac{R_2R_3}{R_2 + R_3} = \frac{(4.7\text{ k}\Omega)(10\text{ k}\Omega)}{14.7\text{ k}\Omega} = 3.20\text{ k}\Omega$$

Determine the voltage across the parallel combination by the voltage-divider formula.

$$V_{2\|3} = \left(\frac{R_{2\|3}}{R_1 + R_{2\|3}}\right)V_S = \left(\frac{3.2\text{ k}\Omega}{18.2\text{ k}\Omega}\right)24\text{ V} = 4.22\text{ V}$$

This calculation shows that 4.22 V is the voltage reading that you should get on the meter. However, the meter reads 9.6 V across $R_{2\|3}$. This value is incorrect, and, because it is higher than it should be, either R_2 or R_3 is probably open. Why? Because if either of these two resistors is open, the resistance across which the meter is connected is larger than expected. A higher resistance will drop a higher voltage in this circuit.

Step 2: Planning

Start trying to find the open resistor by assuming that R_2 is open. If it is, the voltage across R_3 is

$$V_3 = \left(\frac{R_3}{R_1 + R_3}\right)V_S = \left(\frac{10\text{ k}\Omega}{25\text{ k}\Omega}\right)24\text{ V} = 9.6\text{ V}$$

Since the measured voltage is also 9.6 V, this calculation shows that R_2 is probably open.

Step 2: Measurement

Disconnect power and remove R_2. Measure its resistance to verify it is open. If it is not, inspect the wiring, solder, or connections around R_2, looking for the open.

Related Problem What would be the voltmeter reading if R_3 were open in Figure 64? If R_1 were open?

Open Multisim file E06-22. Determine if a fault exists in the circuit and, if so, isolate the fault to a single component.

EXAMPLE 23

Suppose that you measure 24 V with the voltmeter in Figure 65. Determine if there is a fault, and, if there is, identify it.

▶ **FIGURE 65**

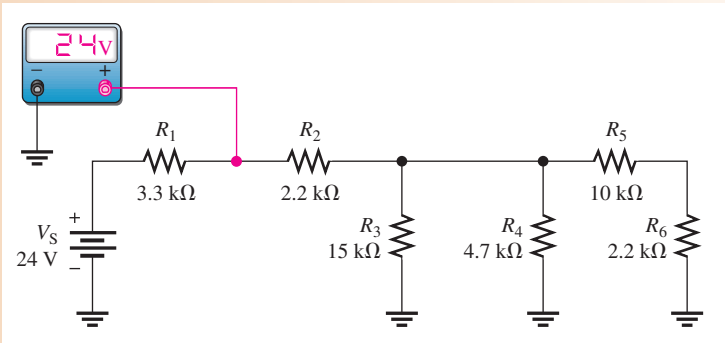

www.EngineeringBooksPdf.com

Solution **Step 1:** Analysis

There is no voltage drop across R_1 because both sides of the resistor are at +24 V. Either there is no current through R_1 from the source, which tells you that R_2 is open in the circuit, or R_1 is shorted.

Step 2: Planning

The most probable failure is an open R_2. If it is open, then there will be no current from the source. To verify this, measure across R_2 with the voltmeter. If R_2 is open, the meter will indicate 24 V. The right side of R_2 will be at zero volts because there is no current through any of the other resistors to cause a voltage drop across them.

Step 3: Measurement

The measurement to verify that R_2 is open is shown in Figure 66.

▶ FIGURE 66

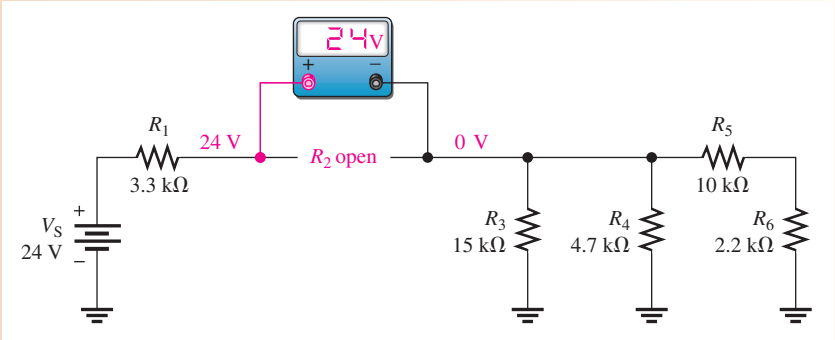

Related Problem What would be the voltage across an open R_5 in Figure 65 assuming no other faults?

Open Multisim file E06-23. Determine if a fault exists in the circuit and, if so, isolate the fault to a single component.

EXAMPLE 24

The two voltmeters in Figure 67 indicate the voltages shown. Apply logical thought and your knowledge of circuit operation to determine if there are any opens or shorts in the circuit and, if so, where they are located.

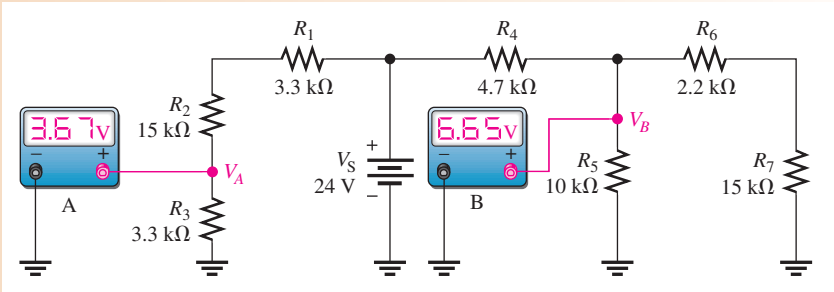

▲ FIGURE 67

www.EngineeringBooksPdf.com

Solution

Step 1: Determine if the voltmeter readings are correct. R_1, R_2, and R_3 act as a voltage divider. Calculate the voltage (V_A) across R_3 as follows:

$$V_A = \left(\frac{R_3}{R_1 + R_2 + R_3}\right)V_S = \left(\frac{3.3\text{ k}\Omega}{21.6\text{ k}\Omega}\right)24\text{ V} = 3.67\text{ V}$$

The voltmeter A reading is correct. This indicates that R_1, R_2, and R_3 are connected and are not faulty.

Step 2: See if the voltmeter B reading is correct. $R_6 + R_7$ is in parallel with R_5. The series-parallel combination of R_5, R_6, and R_7 is in series with R_4. Calculate the resistance of the R_5, R_6, and R_7 combination as follows:

$$R_{5\|(6+7)} = \frac{R_5(R_6 + R_7)}{R_5 + R_6 + R_7} = \frac{(10\text{ k}\Omega)(17.2\text{ k}\Omega)}{27.2\text{ k}\Omega} = 6.32\text{ k}\Omega$$

$R_{5\|(6+7)}$ and R_4 form a voltage divider, and voltmeter B is measuring the voltage across $R_{5\|(6+7)}$. Is it correct? Check as follows:

$$V_B = \left(\frac{R_{5\|(6+7)}}{R_4 + R_{5\|(6+7)}}\right)V_S = \left(\frac{6.32\text{ k}\Omega}{11\text{ k}\Omega}\right)24\text{ V} = 13.8\text{ V}$$

Thus, the actual measured voltage (6.65 V) at this point is incorrect. Some logical thinking will help to isolate the problem.

Step 3: R_4 is not open, because if it were, the meter would read 0 V. If there were a short across it, the meter would read 24 V. Since the actual voltage is much less than it should be, $R_{5\|(6+7)}$ must be less than the calculated value of 6.32 kΩ. The most likely problem is a short across R_7. If there is a short from the top of R_7 to ground, R_6 is effectively in parallel with R_5. In this case,

$$R_5 \parallel R_6 = \frac{R_5R_6}{R_5 + R_6} = \frac{(10\text{ k}\Omega)(2.2\text{ k}\Omega)}{12.2\text{ k}\Omega} = 1.80\text{ k}\Omega$$

Then V_B is

$$V_B = \left(\frac{1.80\text{ k}\Omega}{6.5\text{ k}\Omega}\right)24\text{ V} = 6.65\text{ V}$$

This value for V_B agrees with the voltmeter B reading. So there is a short across R_7. If this were an actual circuit, you would try to find the physical cause of the short.

Related Problem

If the only fault in Figure 67 is that R_2 is shorted, what will voltmeter A read? What will voltmeter B read?

Open Multisim file E06-24. Determine if a fault exists in the circuit and, if so, isolate the fault to a single component.

SECTION 9 CHECKUP

1. Name two types of common circuit faults.
2. For the following faults in Figure 68, determine what voltage would be measured at node *A*:
   (a) no faults
   (b) R_1 open
   (c) short across R_5
   (d) R_3 and R_4 open
   (e) R_2 open

www.EngineeringBooksPdf.com

▶ FIGURE 68

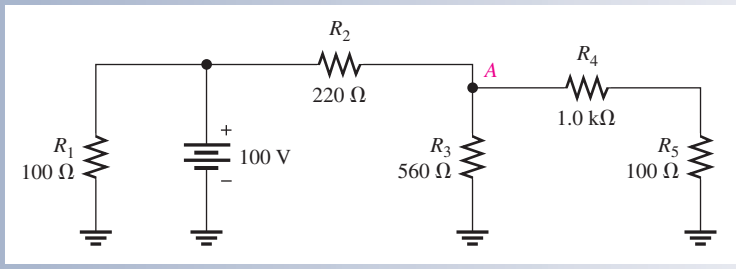

3. In Figure 69, one of the resistors in the circuit is open. Based on the meter reading, determine which is the open resistor.

▶ FIGURE 69

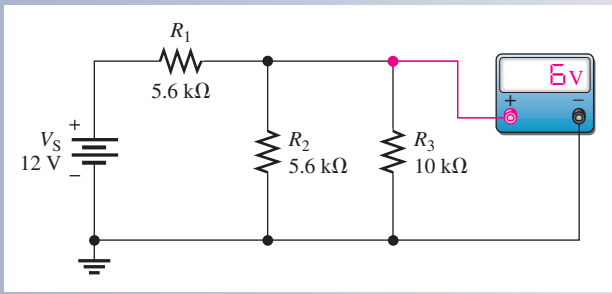

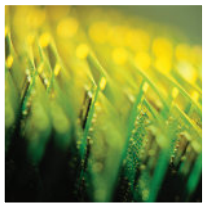

Application Assignment

PUTTING YOUR KNOWLEDGE TO WORK

A voltage divider with three output voltages has been designed and constructed on a PC board. The voltage divider is to be used as part of a portable power supply unit for supplying up to three different reference voltages to measuring instruments in the field. The power supply unit contains a battery pack combined with a voltage regulator that produces a constant +12 V to the voltage-divider circuit board. In this assignment, you will apply your knowledge of loaded voltage dividers, Kirchhoff's laws, and Ohm's law to determine the operating parameters of the voltage divider in terms of voltages and currents for all possible load configurations. You will also troubleshoot the circuit for various malfunctions.

Step 1: The Schematic

Draw the schematic and label the resistor values for the circuit board in Figure 70.

Step 2: Connecting the 12 V Power Supply

Specify how to connect a 12 V power supply to the circuit board so that all resistors are in series and pin 2 has the highest output voltage.

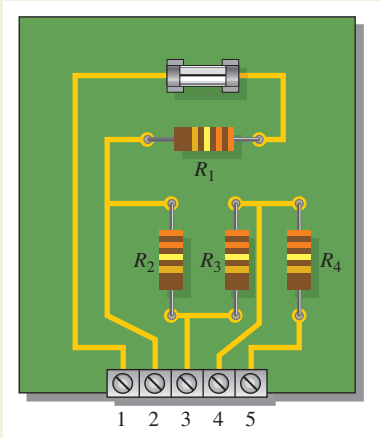

▲ FIGURE 70

Voltage-divider circuit board.

Step 3: Determining the Unloaded Output Voltages

Calculate each of the output voltages with no loads connected. Add these voltage values to a copy of the table in Figure 71.

www.EngineeringBooksPdf.com

10 MΩ Load	$V_{OUT\,(2)}$	$V_{OUT\,(3)}$	$V_{OUT\,(4)}$	% Deviation	$I_{LOAD\,(2)}$	$I_{LOAD\,(3)}$	$I_{LOAD\,(4)}$
None							
Pin 2 to ground							
Pin 3 to ground							
Pin 4 to ground							
Pin 2 to ground				2			
Pin 3 to ground				3			
Pin 2 to ground				2			
Pin 4 to ground				4			
Pin 3 to ground				3			
Pin 4 to ground				4			
Pin 2 to ground				2			
Pin 3 to ground				3			
Pin 4 to ground				4			

▲ **FIGURE 71**

Table of operating parameters for the power supply voltage divider.

Step 4: Determining the Loaded Output Voltages

The instruments to be connected to the voltage divider each have a 10 MΩ input resistance. This means that when an instrument is connected to a voltage-divider output there is effectively a 10 MΩ resistor from that output to ground (negative side of source). Calculate the output voltage across each load for each of the following load combinations and add these voltage values to a copy of the table in Figure 71.

1. A 10 MΩ load connected from pin 2 to ground.
2. A 10 MΩ load connected from pin 3 to ground.
3. A 10 MΩ load connected from pin 4 to ground.
4. A 10 MΩ load connected from pin 2 to ground and another 10 MΩ load from pin 3 to ground.
5. A 10 MΩ load connected from pin 2 to ground and another 10 MΩ load from pin 4 to ground.
6. A 10 MΩ load connected from pin 3 to ground and another 10 MΩ load from pin 4 to ground.
7. A 10 MΩ load connected from pin 2, to ground, another 10 MΩ load from pin 3 to ground, and a third 10 MΩ load from pin 4 to ground.

Step 5: Determining the Percent Deviation of the Output Voltages

Calculate how much each loaded output voltage deviates from its unloaded value for each of the load configurations listed in Step 4 and express as a percentage using the following formula:

$$\text{Percent deviation} = \left(\frac{V_{OUT(unloaded)} - V_{OUT(loaded)}}{V_{OUT(unloaded)}}\right)100\%$$

Add the values to the table in Figure 71.

Step 6: Determining the Load Currents

Calculate the current to each 10 MΩ load for each of the load configurations listed in Step 4. Add these values to the table in Figure 71. Specify a minimum value for the fuse.

Step 7: Troubleshooting the Circuit Board

The voltage-divider circuit board is connected to a 12 V power supply and to the three instruments to which it provides reference voltages, as shown in Figure 72. Voltages at each of the numbered test points are measured with a voltmeter in each of eight different cases. For each case, determine the problem indicated by the voltage measurements.

www.EngineeringBooksPdf.com

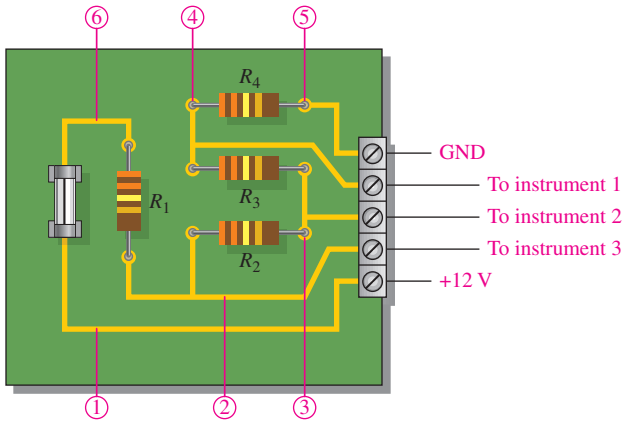

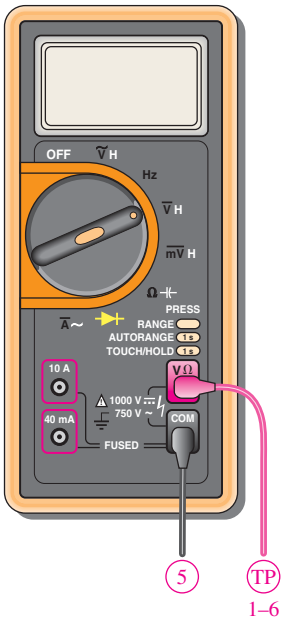

The following voltmeter readings are taken at test points 1 through 6 with respect to ground. The readings are in volts.

Case	Test points (volts) 1	2	3	4	5	6
1	0	0	0	0	0	0
2	12	0	0	0	0	0
3	12	0	0	0	0	12
4	12	11.6	0	0	0	12
5	12	11.3	10.9	0	0	12
6	12	11	10.3	10	0	12
7	12	5.9	0	0	0	12
8	12	7.8	3.8	0	0	12

▲ FIGURE 72

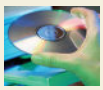

Multisim Analysis and Troubleshooting

1. Using Multisim, connect the circuit shown by the schematic from Step 1 and verify the unloaded output voltages determined in Step 3.
2. Measure the load currents calculated in Step 6.
3. Verify the faults determined in Step 7 for each case by inserting the fault in the circuit and checking the voltage measurements at each point.

Review

1. If the portable unit covered in this section is to supply reference voltages to all three instruments, how many days can a 100 mAh battery be used before recharging?
2. Can $\frac{1}{8}$ W resistors be used on the voltage-divider board?
3. If $\frac{1}{8}$ W resistors are used, will an output shorted to ground cause any of the resistors to overheat due to excessive power?

SUMMARY

- A series-parallel circuit is a combination of both series current paths and parallel current paths.
- To determine total resistance in a series-parallel circuit, identify the series and parallel relationships, and then apply formulas for series resistance and parallel resistance.
- To find the total current, divide the total voltage by the total resistance.
- To determine branch currents, apply the current-divider formula, Kirchhoff's current law, or Ohm's law. Consider each circuit problem individually to determine the most appropriate method.

www.EngineeringBooksPdf.com

- To determine voltage drops across any portion of a series-parallel circuit, use the voltage-divider formula, Kirchhoff's voltage law, or Ohm's law. Consider each circuit problem individually to determine the most appropriate method.
- When a load resistor is connected across a voltage-divider output, the output voltage decreases.
- The load resistor should be large compared to the resistance across which it is connected, in order that the loading effect may be minimized. A *10-times* value is sometimes used as a rule of thumb, but the value depends on the accuracy required for the output voltage.
- To find any current or voltage in a circuit with two or more voltage sources, take the sources one at a time using the superposition theorem.
- A balanced Wheatstone bridge can be used to measure an unknown resistance.
- A bridge is balanced when the output voltage is zero. The balanced condition produces zero current through a load connected across the output terminals of the bridge.
- An unbalanced Wheatstone bridge can be used to measure physical quantities using transducers.
- Any two-terminal resistive circuit, no matter how complex, can be replaced by its Thevenin equivalent.
- The Thevenin equivalent circuit is made up of an equivalent resistance (R_{TH}) in series with an equivalent voltage source (V_{TH}).
- The maximum power transfer theorem states that maximum power is transferred from a source to a load when $R_S = R_L$.
- Opens and shorts in circuits are typical faults.
- Resistors normally open when they burn out.

KEY TERMS

Balanced bridge A bridge circuit that is in the balanced state as indicated by zero volts across the bridge.

Bleeder current The current left after the total load current is subtracted from the total current into the circuit.

Load current The output current of a circuit supplied to a load.

Loading The effect on a circuit when an element that draws current from the circuit is connected across the output terminals.

Maximum power transfer The condition, when the load resistance equals the source resistance, under which maximum power is transferred from source to load.

Superposition A method for analyzing circuits with two or more sources by examining the effects of each source by itself and then combining the effects.

Terminal equivalency A condition that occurs when two circuits produce the same load voltage and load current where the same value of load resistance is connected to either circuit.

Thevenin's theorem A circuit theorem that provides for reducing any two-terminal resistive circuit to a single equivalent voltage source in series with an equivalent resistance.

Unbalanced bridge A bridge circuit that is in the unbalanced state as indicated by a voltage across the bridge proportional to the amount of deviation from the balanced state.

Wheatstone bridge A 4-legged type of bridge circuit with which an unknown resistance can be accurately measured using the balanced state of the bridge. Deviations in resistance can be measured using the unbalanced state.

FORMULAS

1 $I_{BLEEDER} = I_T - I_{RL1} - I_{RL2}$ Bleeder current

2 $R_X = R_V\left(\frac{R_2}{R_4}\right)$ Unknown resistance in a Wheatstone bridge

www.EngineeringBooksPdf.com

TRUE/FALSE QUIZ

Answers are at the end of the chapter.

1. Parallel resistors are always connected between the same pair of nodes.
2. If one resistor is connected in series with a parallel combination, the series resistor will always have a larger voltage drop than the parallel resistors.
3. In a series-parallel combinational circuit, the same current will always be in parallel resistors.
4. A larger load resistor has a smaller loading effect on a circuit.
5. When measuring dc voltage, a DMM will normally have a small loading effect on a circuit.
6. When measuring dc voltage, the input resistance of a DMM is the same no matter on what scale it is used.
7. When measuring dc voltage, the input resistance of an analog multimeter is the same no matter on what scale it is used.
8. A Thevenin circuit consists of a voltage source with a parallel resistor.
9. The internal resistance of an ideal voltage source is zero.
10. To transfer maximum power to a load, the load resistor should be twice the Thevenin resistance of the source.

SELF-TEST

Answers are at the end of the chapter.

1. Which of the following statements are true concerning Figure 73?
   (a) R_1 and R_2 are in series with R_3, R_4, and R_5.
   (b) R_1 and R_2 are in series.
   (c) R_3, R_4, and R_5 are in parallel.
   (d) The series combination of R_1 and R_2 is in parallel with the series combination of R_3, R_4, and R_5.
   (e) answers (b) and (d)

▶ FIGURE 73

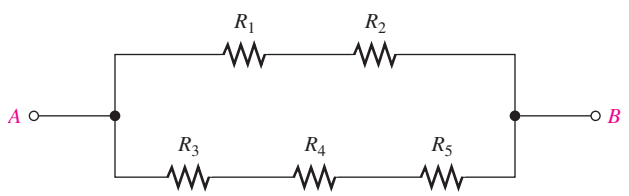

2. The total resistance of Figure 73 can be found with which of the following formulas?
   (a) $R_1 + R_2 + R_3 \parallel R_4 \parallel R_5$ **(b)** $R_1 \parallel R_2 + R_3 \parallel R_4 \parallel R_5$
   (c) $(R_1 + R_2) \parallel (R_3 + R_4 + R_5)$ **(d)** none of these answers
3. If all of the resistors in Figure 73 have the same value, when voltage is applied across terminals A and B, the current is
   (a) greatest in R_5 **(b)** greatest in R_3, R_4, and R_5
   (c) greatest in R_1 and R_2 **(d)** the same in all the resistors
4. Two 1.0 kΩ resistors are in series and this series combination is in parallel with a 2.2 kΩ resistor. The voltage across one of the 1.0 kΩ resistors is 6 V. The voltage across the 2.2 kΩ resistor is
   (a) 6 V **(b)** 3 V **(c)** 12 V **(d)** 13.2 V
5. The parallel combination of a 330 Ω resistor and a 470 Ω resistor is in series with the parallel combination of four 1.0 kΩ resistors. A 10 V source is connected across the circuit. The resistor with the most current has a value of
   (a) 1.0 kΩ **(b)** 330 Ω **(c)** 470 Ω

www.EngineeringBooksPdf.com

6. In the circuit described in Question 5, the resistor(s) with the most voltage has a value of

(a) 1.0 kΩ **(b)** 470 Ω **(c)** 330 Ω

7. In the circuit described in Question 5, the percentage of the total current through any single 1.0 kΩ resistor is

(a) 100% **(b)** 25%

(c) 50% **(d)** 31.25%

8. The output of a certain voltage divider is 9 V with no load. When a load is connected, the output voltage

(a) increases **(b)** decreases

(c) remains the same **(d)** becomes zero

9. A certain voltage divider consists of two 10 kΩ resistors in series. Which of the following load resistors will have the most effect on the output voltage?

(a) 1.0 MΩ **(b)** 20 kΩ

(c) 100 kΩ **(d)** 10 kΩ

10. When a load resistance is connected to the output of a voltage-divider circuit, the current drawn from the source

(a) decreases **(b)** increases

(c) remains the same **(d)** is cut off

11. The output voltage of a balanced Wheatstone bridge is

(a) equal to the source voltage

(b) equal to zero

(c) dependent on all of the resistor values in the bridge

(d) dependent on the value of the unknown resistor

12. The primary method of analyzing a circuit with two or more voltage sources is usually

(a) Thevenin's theorem **(b)** Ohm's law

(c) superposition **(d)** Kirchhoff's law

13. In a certain two-source circuit, one source acting alone produces 10 mA through a given branch. The other source acting alone produces 8 mA in the opposite direction through the same branch. With both sources, the total current through the branch is

(a) 10 mA **(b)** 8 mA

(c) 18 mA **(d)** 2 mA

14. A Thevenin equivalent circuit consists of

(a) a voltage source in series with a resistance

(b) a voltage source in parallel with a resistance

(c) a current source in parallel with a resistance

(d) two voltage sources and a resistance

15. A voltage source with an internal source resistance of 300 Ω transfers maximum power to a

(a) 150 Ω load

(b) 50 Ω load

(c) 300 Ω load

(d) 600 Ω load

16. You are measuring the voltage at a given point in a circuit that has very high resistance values and the measured voltage is a little lower than it should be. This is possibly because of

(a) one or more of the resistance values being off

(b) the loading effect of the voltmeter

(c) the source voltage is too low

(d) all of these answers

www.EngineeringBooksPdf.com

TROUBLESHOOTING: SYMPTOM AND CAUSE

The purpose of these exercises is to help develop thought processes essential to troubleshooting. Answers are at the end of the chapter.

Determine the cause for each set of symptoms. Refer to Figure 74.

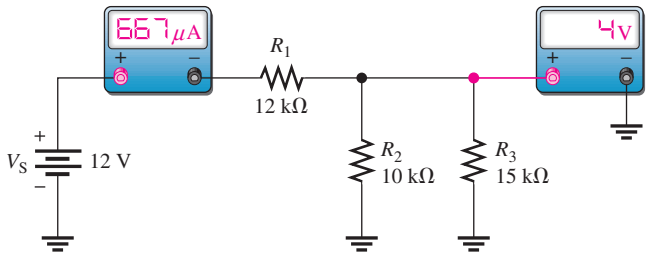

▲ FIGURE 74

The meters indicate the correct readings for this circuit.

1. *Symptom:* The ammeter reading is too low, and the voltmeter reading is 5.45 V.
   Cause:
   (a) R_1 is open.
   (b) R_2 is open.
   (c) R_3 is open.
2. *Symptom:* The ammeter reading is 1 mA, and the voltmeter reading is 0 V.
   Cause:
   (a) There is a short across R_1.
   (b) There is a short across R_2.
   (c) R_3 is open.
3. *Symptom:* The ammeter reading is near zero, and the voltmeter reading is 12 V.
   Cause:
   (a) R_1 is open.
   (b) R_2 is open.
   (c) Both R_2 and R_3 are open.
4. *Symptom:* The ammeter reading is 444 μA, and the voltmeter reading is 6.67 V.
   Cause:
   (a) R_1 is shorted.
   (b) R_2 is open.
   (c) R_3 is open.
5. *Symptom:* The ammeter reading is 2 mA, and the voltmeter reading is 12 V.
   Cause:
   (a) R_1 is shorted.
   (b) R_2 is shorted.
   (c) Both R_2 and R_3 are open.

PROBLEMS

Answers to odd-numbered problems are at the end of the chapter.

BASIC PROBLEMS

SECTION 1 Identifying Series-Parallel Relationships

1. Identify the series and parallel relationships in Figure 75 as seen from the source terminals.

www.EngineeringBooksPdf.com

▶ FIGURE 75

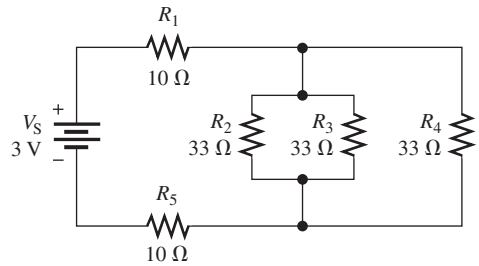

2. Visualize and draw the following series-parallel combinations:
   (a) R_1 in series with the parallel combination of R_2 and R_3.
   (b) R_1 in parallel with the series combination of R_2 and R_3.
   (c) R_1 in parallel with a branch containing R_2 in series with a parallel combination of four other resistors
3. Visualize and draw the following series-parallel circuits:
   (a) a parallel combination of three branches, each containing two series resistors
   (b) a series combination of three parallel circuits, each containing two parallel resistors
4. In each circuit of Figure 76 identify the series and parallel relationships of the resistors viewed from the source.

▶ FIGURE 76

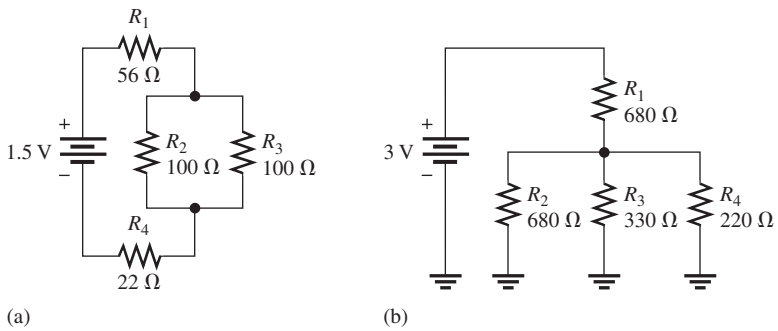

SECTION 2 Analysis of Series-Parallel Resistive Circuits

5. A certain circuit is composed of two parallel resistors. The total resistance is 667 Ω. One of the resistors is 1.0 kΩ. What is the other resistor?
6. For the circuit in Figure 77, determine the total resistance between *A* and *B*.
7. Determine the total resistance for each circuit in Figure 76.
8. Determine the current through each resistor in Figure 75; then calculate each voltage drop.
9. Determine the current through each resistor in both circuits of Figure 76; then calculate each voltage drop.
10. In Figure 78, find the following:
    (a) total resistance between terminals *A* and *B*
    (b) total current drawn from a 6 V source connected from *A* to *B*

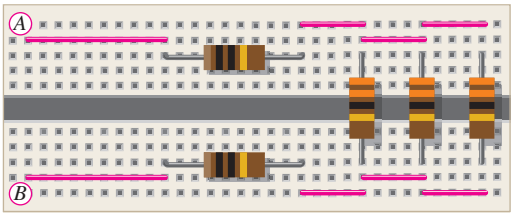

▲ FIGURE 77

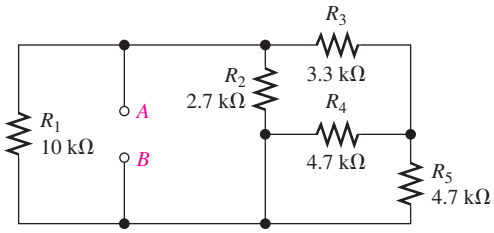

▲ FIGURE 78

www.EngineeringBooksPdf.com

(c) current through R_5

(d) voltage across R_2

11. In Figure 78, determine the current through R_2 for $V_{AB} = 6$ V.

12. In Figure 78, determine the current through R_4 for $V_{AB} = 6$ V.

SECTION 3 Voltage Dividers with Resistive Loads

13. A voltage divider consists of two 56 kΩ resistors and a 15 V source. Calculate the unloaded output voltage taken across one of the 56 kΩ resistors. What will the output voltage be if a load resistor of 1.0 MΩ is connected across the output?

14. A 12 V battery output is divided down to obtain two output voltages. Three 3.3 kΩ resistors are used to provide the two outputs with only one output at a time loaded with 10 kΩ. Determine the output voltages in both cases.

15. Which will cause a smaller decrease in output voltage for a given voltage divider, a 10 kΩ load or a 56 kΩ load?

16. In Figure 79, determine the current drain on the battery with no load on the output terminals. With a 10 kΩ load, what is the current from the battery?

▶ FIGURE 79

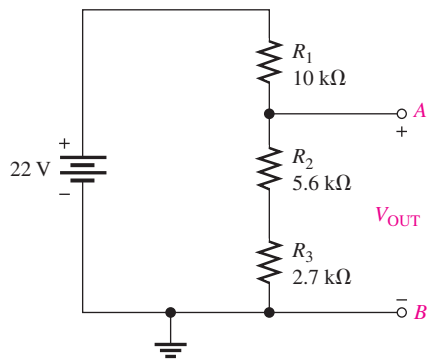

SECTION 4 Loading Effect of a Voltmeter

17. Across which one of the following resistances will a voltmeter with a 10 MΩ internal resistance present the minimum load on a circuit?

(a) 100 kΩ **(b)** 1.2 MΩ **(c)** 22 kΩ **(d)** 8.2 MΩ

18. A certain voltage divider consists of three 1.0 MΩ resistors connected in series to a 100 V source. Determine the voltage across one of the resistors measured by a 10 MΩ voltmeter.

19. What is the difference between the measured and the actual unloaded voltage in Problem 18?

20. By what percentage does the voltmeter in Problem 18 alter the voltage which it measures?

21. A 10,000 Ω/V VOM is used on the 10 V scale to measure the output of a voltage divider. If the divider consists of two series 100 kΩ resistors, what fraction of the source voltage will be measured across one of the resistors?

22. If a DMM with 10 MΩ input resistance is used instead of the VOM in Problem 21, what percentage of the source voltage will be measured by the DMM?

SECTION 5 The Wheatstone Bridge

23. A resistor of unknown value is connected to a Wheatstone bridge circuit. The bridge parameters for a balanced condition are set as follows: $R_V = 18$ kΩ and $R_2/R_4 = 0.02$. What is R_X?

24. A bridge network is shown in Figure 80. To what value must R_V be set in order to balance the bridge?

25. Determine the value of R_X in the balanced bridge in Figure 81.

www.EngineeringBooksPdf.com

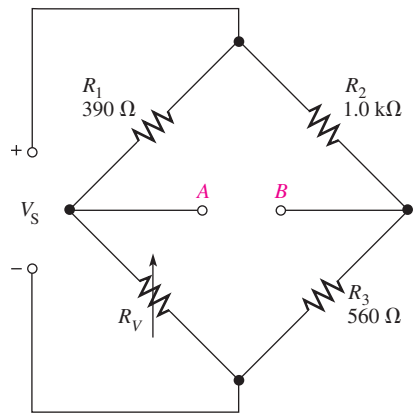

▲ FIGURE 80

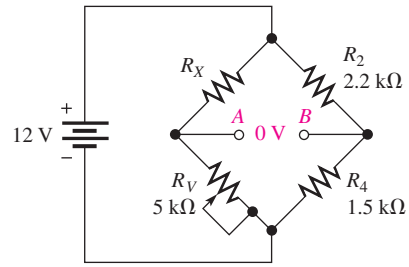

▲ FIGURE 81

26. Determine the output voltage of the unbalanced bridge in Figure 82 for a temperature of 65°C. The thermistor has a nominal resistance of 1 kΩ at 25°C and a positive temperature coefficient. Assume that its resistance changes 5 Ω for each C° change in temperature.

▶ FIGURE 82

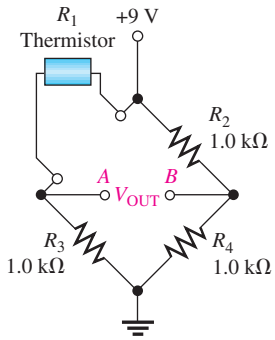

SECTION 6 Thevenin's Theorem

27. Reduce the circuit in Figure 83 to its Thevenin equivalent as viewed from terminals *A* and *B*.

▶ FIGURE 83

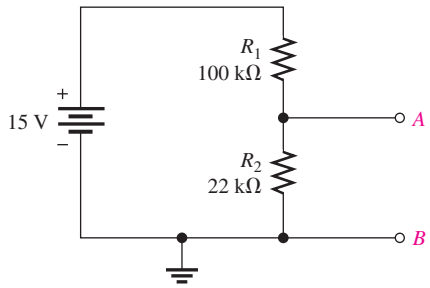

28. For each circuit in Figure 84, determine the Thevenin equivalent as seen from terminals *A* and *B*.

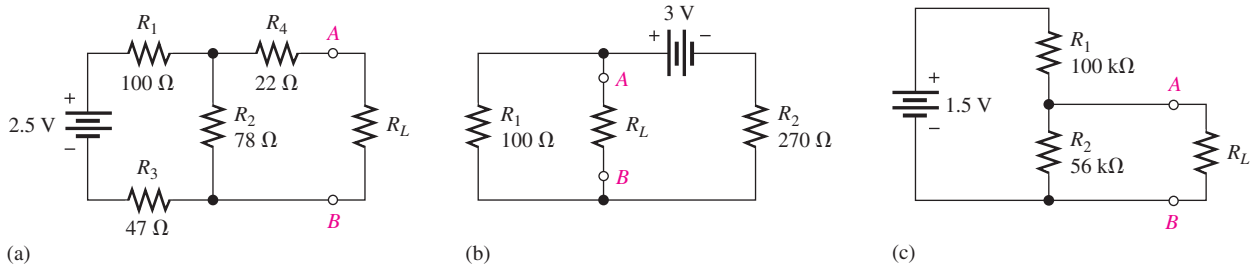

▲ FIGURE 84

www.EngineeringBooksPdf.com

29. Determine the voltage and current for R_L in Figure 85.

▶ FIGURE 85

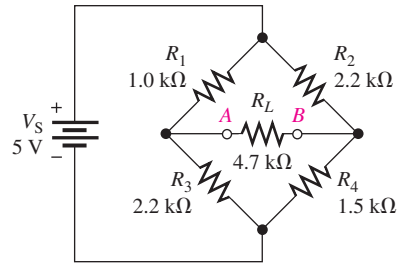

SECTION 7 The Maximum Power Transfer Theorem

30. Determine the value of a load resistor connected between terminals A and B in Figure 83 for maximum power transfer to the load resistor.

31. A certain Thevenin equivalent circuit has a $V_{TH} = 5.5$ V and an $R_{TH} = 75\ \Omega$. To what value of load resistor will maximum power be transferred?

32. Determine the value of R_L in Figure 84(a) for which R_L dissipates maximum power.

SECTION 8 The Superposition Theorem

33. In Figure 86, use the superposition theorem to find the current in R_3.

34. In Figure 86, what is the current through R_2?

▶ FIGURE 86

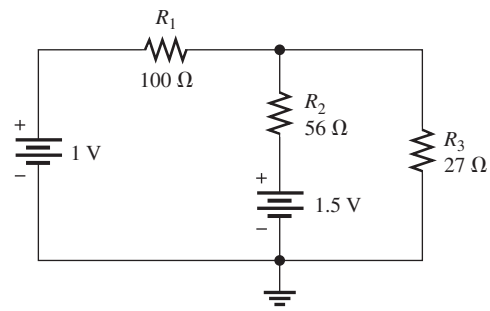

SECTION 9 Troubleshooting

35. Is the voltmeter reading in Figure 87 correct? If not, what is the problem?

▶ FIGURE 87

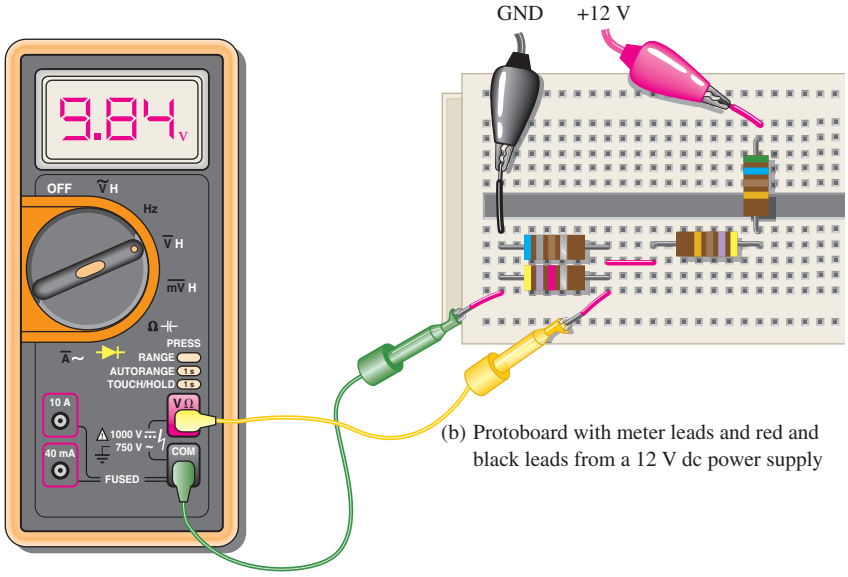

(a) Meter with leads going to protoboard

(b) Protoboard with meter leads and red and black leads from a 12 V dc power supply

www.EngineeringBooksPdf.com

36. If R_2 in Figure 88 opens, what voltages will be read at points A, B, and C?

▶ FIGURE 88

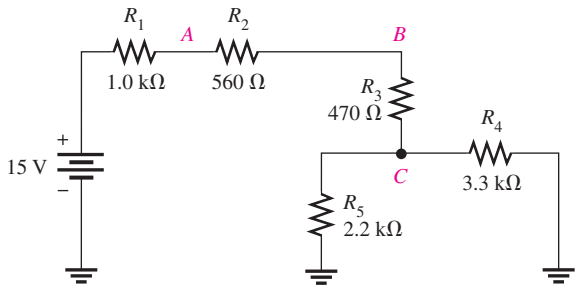

37. Check the meter readings in Figure 89 and locate any fault that may exist.

▶ FIGURE 89

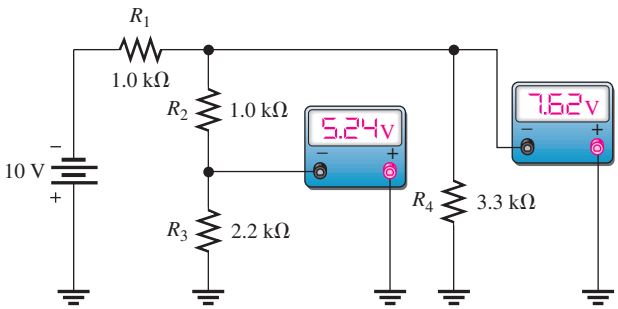

38. Determine the voltage you would expect to measure across each resistor in Figure 88 for each of the following faults. Assume the faults are independent of each other.

(a) R_1 open **(b)** R_3 open **(c)** R_4 open **(d)** R_5 open

(e) point C shorted to ground

39. Determine the voltage you would expect to measure across each resistor in Figure 89 for each of the following faults:

(a) R_1 open **(b)** R_2 open **(c)** R_3 open **(d)** a short across R_4

ADVANCED PROBLEMS

40. In each circuit of Figure 90, identify the series and parallel relationships of the resistors viewed from the source.

▶ FIGURE 90

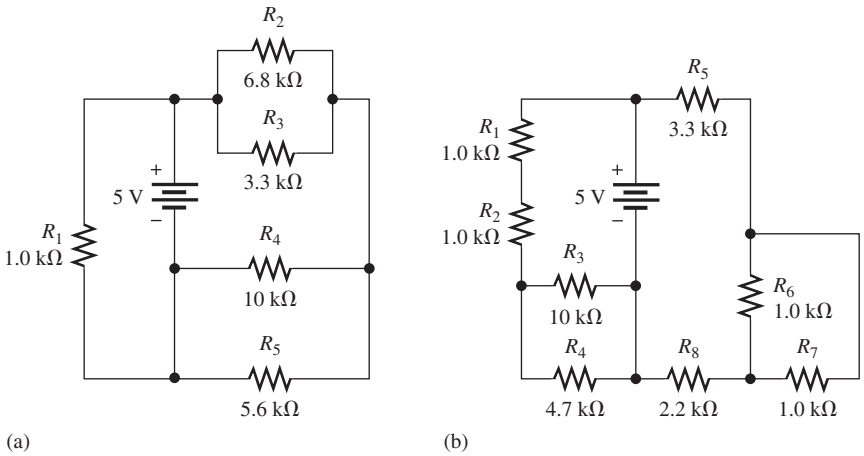

www.EngineeringBooksPdf.com

41. Draw the schematic of the PC board layout in Figure 91 showing resistor values and identify the series-parallel relationships. Which resistors, if any, can be removed with no effect on R_T?

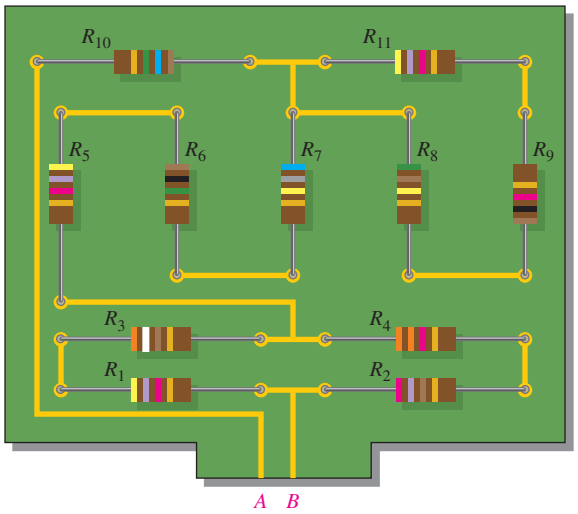

▲ FIGURE 91

42. For the circuit shown in Figure 92, calculate the following:

(a) total resistance across the source

(b) total current from the source

(c) current through the 910 Ω resistor

(d) voltage from point *A* to point *B*

▶ FIGURE 92

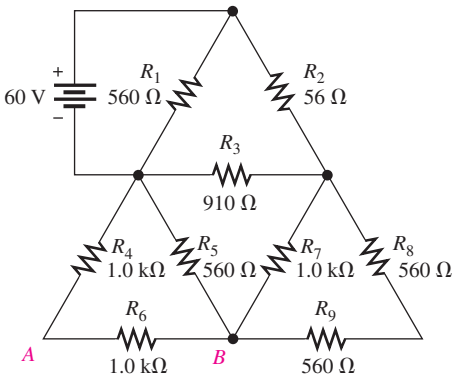

43. Determine the total resistance and the voltage at points *A*, *B*, and *C* in the circuit of Figure 93.

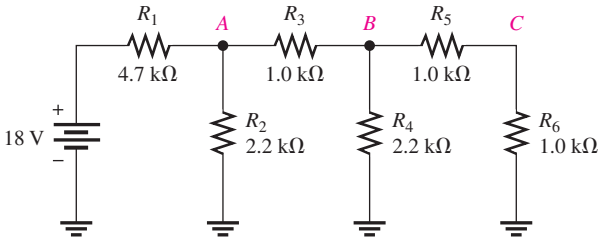

▲ FIGURE 93

www.EngineeringBooksPdf.com

44. Determine the total resistance between terminals A and B of the circuit in Figure 94. Also calculate the current in each branch with 10 V between A and B.

45. What is the voltage across each resistor in Figure 94? There are 10 V between A and B.

▶ **FIGURE 94**

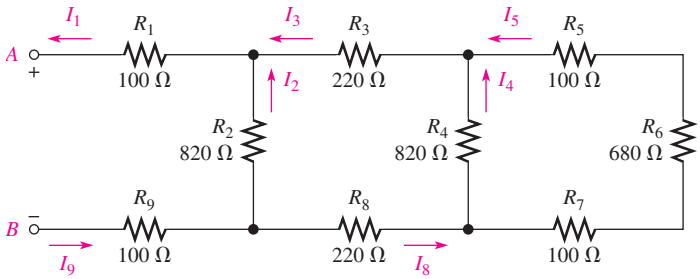

46. Determine the voltage, V_{AB}, in Figure 95.

▶ **FIGURE 95**

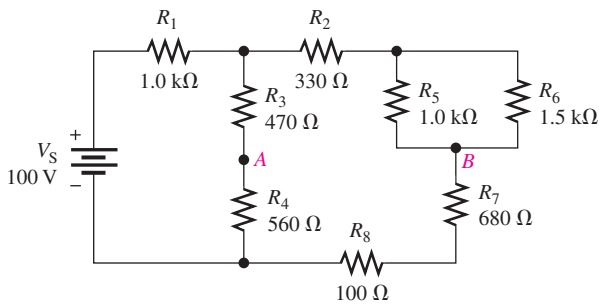

47. Find the value of R_2 in Figure 96.

▶ **FIGURE 96**

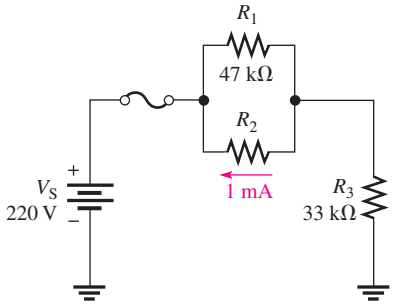

48. Determine the total resistance and the voltage at points A, B, and C in the circuit of Figure 97.

▶ **FIGURE 97**

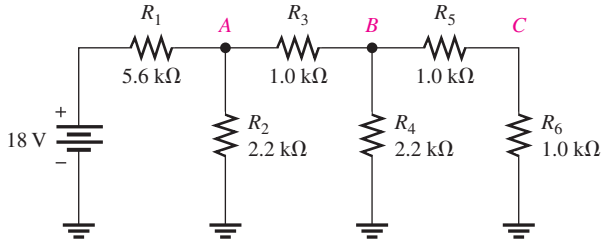

www.EngineeringBooksPdf.com

49. Develop a voltage divider to provide a 6 V output with no load and a minimum of 5.5 V across a 1.0 kΩ load. The source voltage is 24 V, and the unloaded current is not to exceed 100 mA.

50. Determine the resistance values for a voltage divider that must meet the following specifications: The current under an unloaded condition is not to exceed 5 mA. The source voltage is to be 10 V. A 5 V output and a 2.5 V output are required. Draw the circuit. Determine the effect on the output voltages if a 1.0 kΩ load is connected to each output.

51. Using the superposition theorem, calculate the current in the right-most branch of Figure 98.

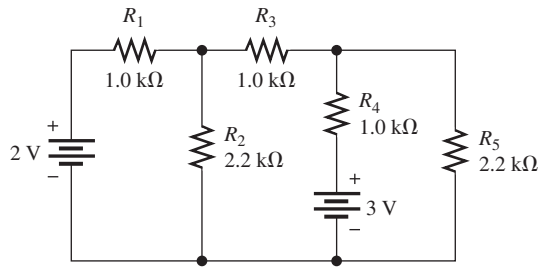

▲ FIGURE 98

52. Find the current through R_L in Figure 99.

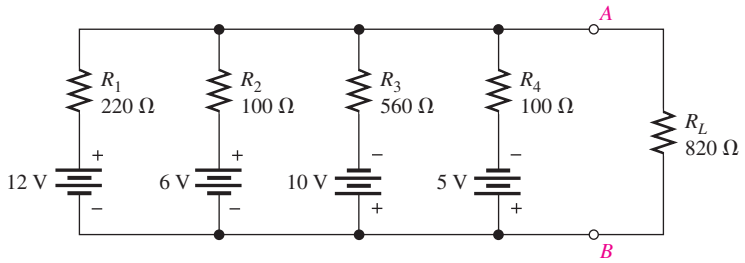

▲ FIGURE 99

53. Using Thevenin's theorem, find the voltage across R_4 in Figure 100.

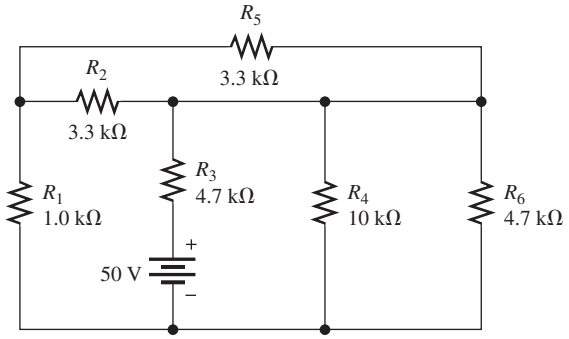

▲ FIGURE 100

54. Determine V_{OUT} for the circuit in Figure 101 for the following conditions:

(a) Switch SW2 connected to +12 V and the rest to ground

(b) Switch SW1 connected to +12 V and the rest to ground

www.EngineeringBooksPdf.com

▶ FIGURE 101

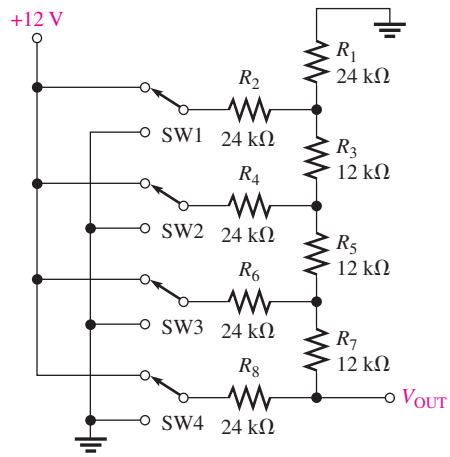

55. Develop a schematic for the double-sided PC board in Figure 102 and label the resistor values.

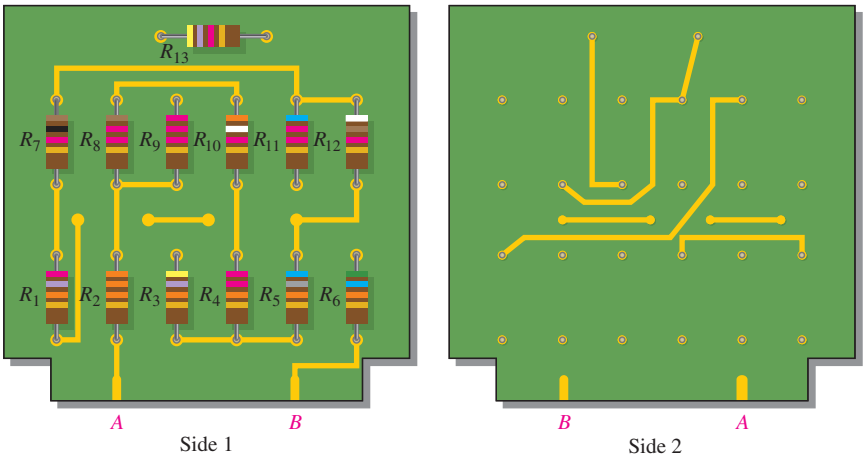

▲ FIGURE 102

56. Lay out a PC board for the circuit in Figure 90(b). The battery is to be connected external to the board.

57. The voltage divider in Figure 103 has a switched load. Determine the voltage at each tap (V_1, V_2, and V_3) for each position of the switch.

▶ FIGURE 103

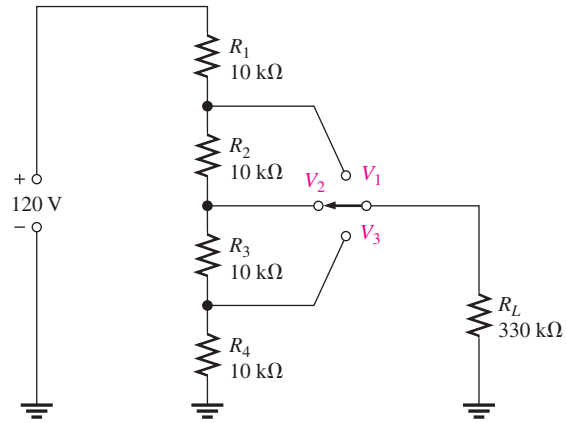

www.EngineeringBooksPdf.com

58. Figure 104 shows a dc biasing arrangement for a field-effect transistor amplifier. Biasing is a common method for setting up certain dc voltage levels required for proper amplifier operation. Although you may not be familiar with transistor amplifiers at this point, the dc voltages and currents in the circuit can be determined using methods that you already know.

(a) Find V_G and V_S with respect to ground

(b) Determine I_1, I_2, I_D, and I_S

(c) Find V_{DS} and V_{DG}

▶ FIGURE 104

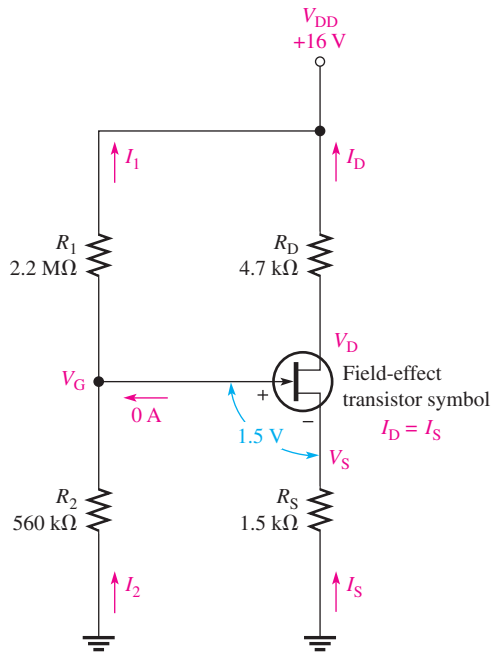

59. Look at the voltmeters in Figure 105 and determine if there is a fault in the circuit. If there is a fault, identify it.

60. Are the voltmeter readings in Figure 106 correct?

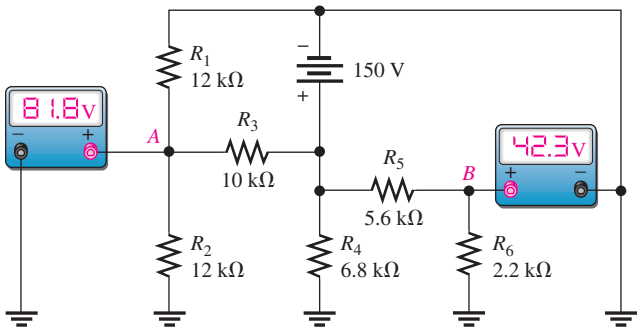

▲ FIGURE 105

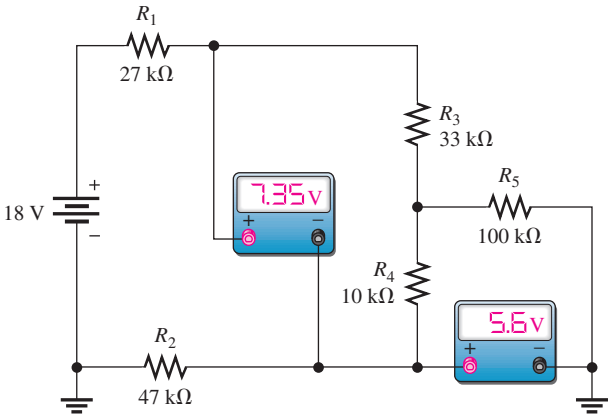

▲ FIGURE 106

61. There is one fault in Figure 107. Based on the voltmeter indications, determine what the fault is.

www.EngineeringBooksPdf.com

▶ FIGURE 107

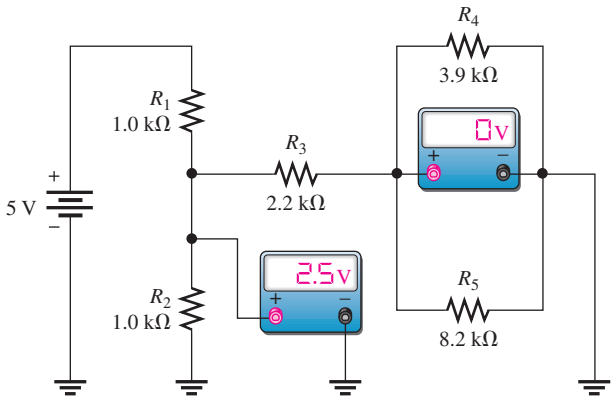

62. Look at the voltmeters in Figure 108 and determine if there is a fault in the circuit. If there is a fault, identify it.

63. Determine the voltmeter readings in Figure 108 if the 4.7 kΩ resistor opens.

▶ FIGURE 108

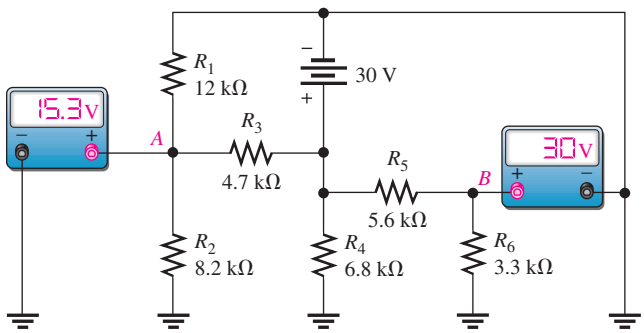

MULTISIM TROUBLESHOOTING PROBLEMS

64. Open file P06-64; files are found at www.pearsonhighered.com/floyd/. Determine if there is a fault in the circuit. If so, identify the fault.

65. Open file P06-65 and determine if there is a fault in the circuit. If so, identify the fault.

66. Open file P06-66 and determine if there is a fault in the circuit. If so, identify the fault.

67. Open file P06-67 and determine if there is a fault in the circuit. If so, identify the fault.

68. Open file P06-68 and determine if there is a fault in the circuit. If so, identify the fault.

69. Open file P06-69 and determine if there is a fault in the circuit. If so, identify the fault.

70. Open file P06-70 and determine if there is a fault in the circuit. If so, identify the fault.

71. Open file P06-71 and determine if there is a fault in the circuit. If so, identify the fault.

ANSWERS

SECTION CHECKUPS

SECTION 1 Identifying Series-Parallel Relationships

1. See Figure 109.

▶ FIGURE 109

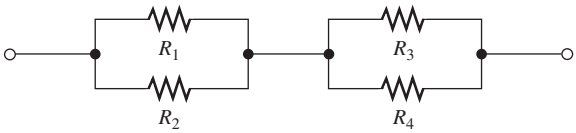

www.EngineeringBooksPdf.com

2. R_1 and R_2 are in series with the parallel combination of R_3 and R_4.
3. All resistors are in parallel.
4. R_1 and R_2 are in parallel; R_3 and R_4 are in parallel.
5. Yes, the two parallel combinations are in series with each other.

SECTION 2 Analysis of Series-Parallel Circuits

1. $R_T = R_1 + R_4 + R_2 \parallel R_3 = 599\ \Omega$
2. $I_3 = 11.2$ mA
3. $V_{R2} = I_2 R_2 = 3.7$ V
4. $R_T = 89\ \Omega$; $I_T = 11.2$ mA

SECTION 3 Voltage Dividers with Resistive Loads

1. The load resistor decreases the output voltage.
2. True
3. $V_{OUT(unloaded)} = 19.23$ V, $V_{OUT(loaded)} = 19.16$ V

SECTION 4 Loading Effect of a Voltmeter

1. A voltmeter loads a circuit because the internal resistance of the meter appears in parallel with the circuit resistance across which it is connected, reducing the resistance between those two points of the circuit and drawing current from the circuit.
2. No, because the meter resistance is much larger than 1.0 kΩ.
3. Yes.
4. 4.0 MΩ

SECTION 5 The Wheatstone Bridge

1. See Figure 110.

▶ FIGURE 110

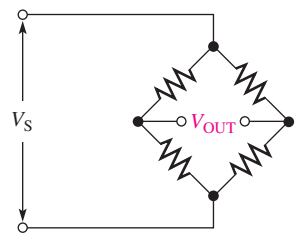

2. A bridge is balanced when the output voltage is zero.
3. $R_X = 15$ kΩ
4. An unbalanced bridge is used to measure transducer-sensed quantities.
5. A load cell is a transducer that uses strain gauges to convert mechanical force into an electrical signal.

SECTION 6 Thevenin's Theorem

1. A Thevenin equivalent circuit consists of V_{TH} and R_{TH}.
2. See Figure 111.

▶ FIGURE 111

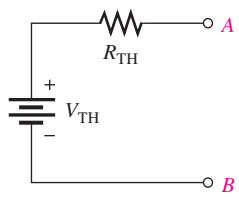

www.EngineeringBooksPdf.com

3. V_{TH} is the open circuit voltage between two points in a circuit.
4. R_{TH} is the resistance as viewed from two terminals in a circuit, with all sources replaced by their internal resistances.
5. See Figure 112.

▶ FIGURE 112

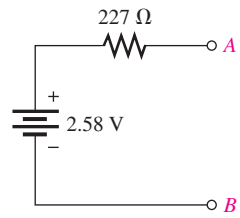

SECTION 7 Maximum Power Transfer Theorem

1. The maximum power transfer theorem states that maximum power is transferred from a source to a load when the load resistance is equal to the internal source resistance.
2. Maximum power is delivered to a load when $R_L = R_S$.
3. $R_L = R_S = 50\,\Omega$

SECTION 8 The Superposition Theorem

1. The total current in any branch of a multiple-source linear circuit is equal to the algebraic sum of the currents due to the individual sources acting alone, with the other sources replaced by their internal resistances.
2. The superposition method allows each source to be treated independently.
3. A short simulates the zero internal resistance of an ideal voltage source.
4. The net current is in the direction of the larger current.

SECTION 9 Troubleshooting

1. Opens and short are two common faults.
2. **(a)** 62.8 V **(b)** 62.8 V **(c)** 62 V **(d)** 100 V **(e)** 0 V
3. The 10 kΩ resistor is open.

RELATED PROBLEMS FOR EXAMPLES

1 The added resistor would be in parallel with the combination of R_4 in series with R_2 and R_3 in parallel.

2 The added resistor is in parallel with R_5.

3 A to gnd: $R_T = R_3 \parallel (R_1 + R_2) + R_4$
B to gnd: $R_T = R_2 \parallel (R_1 + R_3) + R_4$
C to gnd: $R_T = R_4$

4 None. The new resistor will be shorted by the existing connection between those points.

5 R_1 and R_4 are effectively removed from the circuit.

6 55.1 Ω

7 128.3 Ω

8 $I_1 = 8.93$ mA; $I_3 = 5.85$ mA; $I_T = 18.2$ mA

9 $V_1 = V_2 = 10.3$ V; $V_3 = 9.70$ V; $V_4 = 3.16$ V; $V_5 = 6.54$ V

10 $I_1 = 1.42$ mA, $P_1 = 6.67$ mW; $I_2 = 756\,\mu A$, $P_2 = 3.55$ mW;
$I_3 = 2.18$ mA, $P_3 = 4.75$ mW; $I_4 = 1.13$ mA, $P_4 = 1.28$ mW;
$I_5 = 1.06$ mA, $P_5 = 758\,\mu$W; $I_6 = 1.06$ mA, $P_6 = 435\,\mu$W

11 3.39 V

12 The current will increase because there is a smaller loading effect on the circuit. The new current in R_{L2} is 59 μA.

www.EngineeringBooksPdf.com

13 5.19 V
14 3.3 kΩ
15 0.49 V
16 2.36 V; 124 Ω
17 $V_{TH(AB)} = 3.46$ V; $R_{TH(AB)} = 3.08$ kΩ
18 1.17 mA
19 41.7 mW
20 22.0 mA
21 5 mA
22 5.73 V, 0 V
23 9.46 V
24 $V_A = 12$ V; $V_B = 13.8$ V

TRUE/FALSE QUIZ

1. T **2.** F **3.** F **4.** T **5.** T **6.** T **7.** F **8.** F
9. T **10.** F

SELF-TEST

1. (e) **2.** (c) **3.** (c) **4.** (c) **5.** (b) **6.** (a) **7.** (b)
8. (b) **9.** (d) **10.** (b) **11.** (b) **12.** (c) **13.** (d) **14.** (a)
15. (c) **16.** (d)

TROUBLESHOOTING: SYMPTOM AND CAUSE

1. (c)
2. (b)
3. (c)
4. (b)
5. (a)

PROBLEMS – ODD-NUMBERED ANSWERS

1. R_2, R_3, and R_4 are in parallel, and this parallel combination is in series with both R_1 and R_5.
3. See Figure P–6.
5. 2003 Ω
7. **(a)** 128 Ω **(b)** 791 Ω
9. **(a)** $I_1 = I_4 = 11.7$ mA, $I_2 = I_3 = 5.85$ mA; $V_1 = 655$ mV, $V_2 = V_3 = 585$ mV, $V_4 = 257$ mV
(b) $I_1 = 3.8$ mA, $I_2 = 618\ \mu$A, $I_3 = 1.27$ mA, $I_4 = 1.91$ mA; $V_1 = 2.58$ V, $V_2 = V_3 = V_4 = 420$ mV
11. 2.22 mA
13. 7.5 V unloaded; 7.29 V loaded
15. 56 kΩ load
17. 22 kΩ
19. 2 V
21. 33%
23. 360 Ω
25. 7.33 kΩ
27. $R_{TH} = 18$ kΩ; $V_{TH} = 2.7$ V

www.EngineeringBooksPdf.com

▶ FIGURE P–6

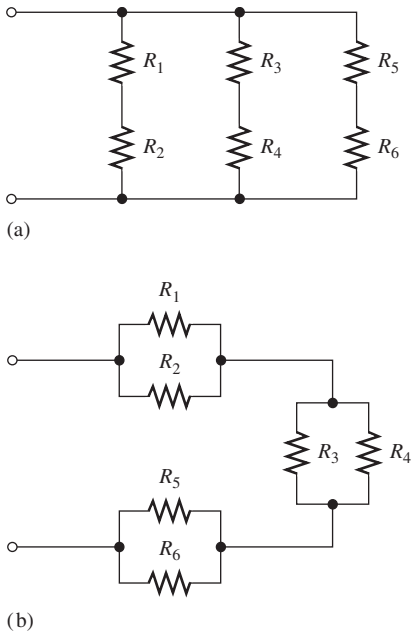

29. 1.06 V; 226 μA

31. 75 Ω

33. 21 mA

35. No, the meter should read 4.39 V. The 680 Ω resistor is open.

37. The 7.62 V and 5.24 V readings are incorrect, indicating that the 3.3 kΩ resistor is open.

39. **(a)** $V_1 = -10$ V, all others 0 V

(b) $V_1 = -2.33$ V, $V_4 = -7.67$ V, $V_2 = -7.67$ V, $V_3 = 0$ V

(b) $V_1 = -2.33$ V, $V_4 = -7.67$ V, $V_2 = -7.67$ V, $V_3 = 0$ V

(c) $V_1 = -2.33$ V, $V_4 = -7.67$ V, $V_2 = 0$ V, $V_3 = -7.67$ V

(d) $V_1 = -10$ V, all others 0 V

41. See Figure P–7.

43. $R_T = 5.76$ kΩ; $V_A = 3.3$ V; $V_B = 1.7$ V; $V_C = 850$ mV

▶ FIGURE P–7

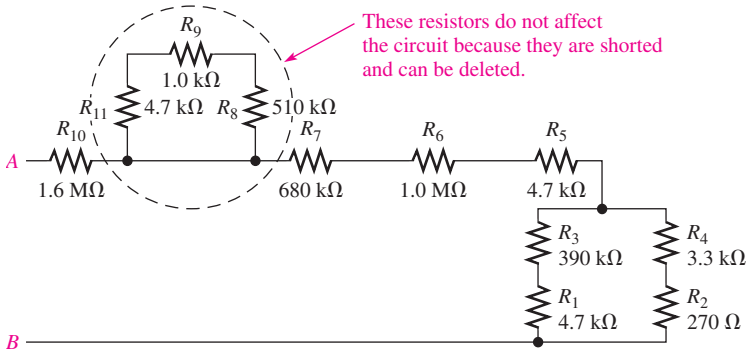

www.EngineeringBooksPdf.com

45. $V_1 = 1.61$ V; $V_2 = 6.77$ V; $V_3 = 1.72$ V; $V_4 = 3.33$ V; $V_5 = 378$ mV; $V_6 = 2.57$ V; $V_7 = 378$ mV; $V_8 = 1.72$ V; $V_9 = 1.61$ V

47. 110 kΩ

49. $R_1 = 180\ \Omega$; $R_2 = 60\ \Omega$. Output across R_2.

51. 845 μA

53. 11.7 V

55. See Figure P–8.

▶ **FIGURE P–8**

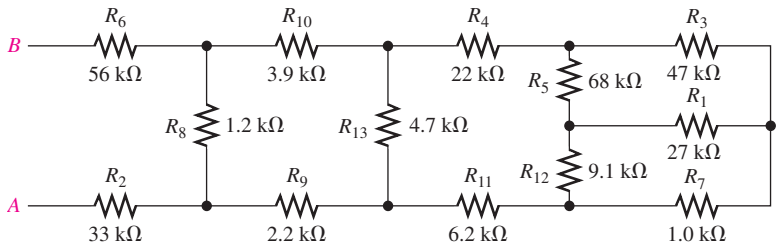

57. Pos 1: $V_1 = 88.0$ V, $V_2 = 58.7$ V, $V_3 = 29.3$ V
Pos 2: $V_1 = 89.1$ V, $V_2 = 58.2$ V, $V_3 = 29.1$ V
Pos 3: $V_1 = 89.8$ V, $V_2 = 59.6$ V, $V_3 = 29.3$ V

59. One of the 12 kΩ resistors is open.

61. The 2.2 kΩ resistor is open.

63. $V_A = 0$ V; $V_B = 11.1$ V

65. R_2 is shorted.

67. No fault

69. R_4 is shorted.

71. R_5 is shorted.

PHOTO CREDITS FOR REOCCURRING IMAGES

CD Icon: Stockbyte/Getty Images; **Computer Chips:** Photodisc/Thinkstock; **Computer:** Jeff Maloney/Photodisc/Getty Images; **Fiber Optic:** discpicture/Shutterstock.

www.EngineeringBooksPdf.com

This page intentionally left blank

www.EngineeringBooksPdf.com

MAGNETISM AND ELECTROMAGNETISM

From Chapter 7 of *Electronics Fundamentals: Circuits, Devices, and Applications*, Eighth Edition, Thomas L. Floyd, David M. Buchla.
Copyright © 2010 by Pearson Education, Inc. Published by Pearson Prentice Hall. All rights reserved.

www.EngineeringBooksPdf.com

Magnetism and Electromagnetism

CHAPTER OUTLINE

1. The Magnetic Field
2. Electromagnetism
3. Electromagnetic Devices
4. Magnetic Hysteresis
5. Electromagnetic Induction
6. DC Generators
7. DC Motors

Application Assignment: Putting Your Knowledge to Work

CHAPTER OBJECTIVES

- Explain the principles of the magnetic field
- Explain the principles of electromagnetism
- Describe the principle of operation for several types of electromagnetic devices
- Explain magnetic hysteresis
- Discuss the principle of electromagnetic induction
- Explain how a dc generator works
- Explain how a dc motor works

KEY TERMS

- Magnetic field
- Lines of force
- Magnetic flux
- Weber (Wb)
- Tesla (T)
- Gauss
- Hall effect
- Electromagnetism
- Electromagnetic field
- Permeability
- Reluctance ($\mathcal{R}$)
- Magnetomotive force (mmf)
- Ampere-turn (At)
- Solenoid
- Relay
- Speaker
- Magnetic field intensity
- Hysteresis
- Retentivity
- Induced voltage (v_{ind})
- Electromagnetic induction
- Induced current (i_{ind})
- Faraday's law
- Lenz's law

APPLICATION ASSIGNMENT PREVIEW

For the application assignment, you will apply what you learn in this chapter about relays and other devices to a simple security alarm system. You will determine how to connect the components to form a complete system and specify a check-out procedure to make sure the system is working properly. After studying this chapter, you should be able to complete the application assignment.

VISIT THE COMPANION WEBSITE

Study aids for this chapter are available at http://www.pearsonhighered.com/floyd/

INTRODUCTION

This chapter introduces two concepts: magnetism and electromagnetism. The operation of many types of electrical devices is based partially on magnetic or electromagnetic principles. Electromagnetic induction is important in an electrical component called an inductor or coil.

Two types of magnets are the permanent magnet and the electromagnet. The permanent magnet maintains a constant magnetic field between its two poles with no external excitation. The electromagnet produces a magnetic field only when there is current through it. The electromagnet is basically a coil of wire wound around a magnetic core material. The chapter includes an introduction to dc generators and to dc motors. These are important devices that apply magnetism and electromagnetism.

Streeter Photography/Alamy

www.EngineeringBooksPdf.com

1 THE MAGNETIC FIELD

A permanent magnet has a magnetic field surrounding it. A **magnetic field** is visualized by **lines of force** that radiate from the north pole (N) to the south pole (S) and back to the north pole through the magnetic material.

After completing this section, you should be able to

- **Explain the principles of the magnetic field**
  - Define *magnetic flux*
  - Define *magnetic flux density*
  - Discuss how materials are magnetized
  - Explain how a magnetic switch works

A permanent magnet, such as the bar magnet shown in Figure 1, has a magnetic field surrounding it. All magnetic fields have their origin in moving charge, which in solid materials is caused by moving electrons. In certain materials such as iron, atoms can be aligned so that the electron motion is reinforced, creating an observable field that extends in three dimensions. Even some electrical insulators can exhibit this behavior; ceramics make excellent magnets but are electrical insulators.

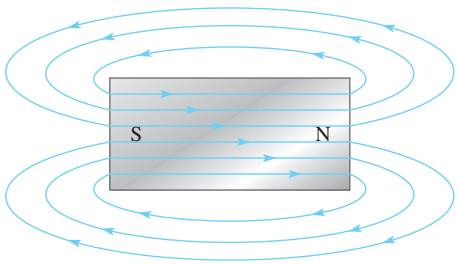

Blue lines represent only a few of the many magnetic lines of force in the magnetic field.

FIGURE 1

Magnetic lines of force around a bar magnet.

HISTORY NOTE

Wilhelm Eduard Weber 1804–1891

Weber was a German physicist who worked closely with Gauss, whose biography appears later. Independently, he established a system of absolute electrical units and also performed work that was crucial to the later development of the electromagnetic theory of light. The unit of magnetic flux is named in his honor. (Photo credit: Courtesy of the Smithsonian Institution. Photo No. 52,604.)

To explain and illustrate magnetic fields, Michael Faraday drew "lines of force" or flux lines to represent the unseen field. Flux lines are widely used as a description of that field, showing the strength and direction of the field. The flux lines never cross. When lines are close together, the field is more intense; when they are farther apart, the field is weaker. The flux lines are always drawn from the north pole (N) to the south pole (S) of a magnet. Even in small magnets, the number of lines based on the mathematical definition is extremely large, so for clarity, only a few lines are generally shown in drawings of magnetic fields.

When unlike poles of two permanent magnets are placed close together, their magnetic fields produce an attractive force, as indicated in Figure 2(a). When two like poles are brought close together, they repel each other, as shown in part (b).

When a nonmagnetic material such as paper, glass, wood, or plastic is placed in a magnetic field, the lines of force are unaltered, as shown in Figure 3(a). However, when a magnetic material such as iron is placed in the magnetic field, the lines of force tend to change course and pass through the iron rather than through the surrounding air. They do so because the iron provides a magnetic path that is more easily established than that of air. Figure 3(b) illustrates this principle. The fact that magnetic lines of force follow a path

This icon indicates selected websites for further information on topics in this section. See the Companion Website provided with this text.

www.EngineeringBooksPdf.com

▶ FIGURE 2

Magnetic attraction and repulsion.

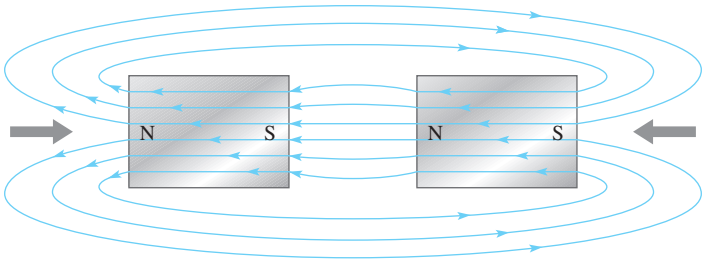

(a) Unlike poles attract.

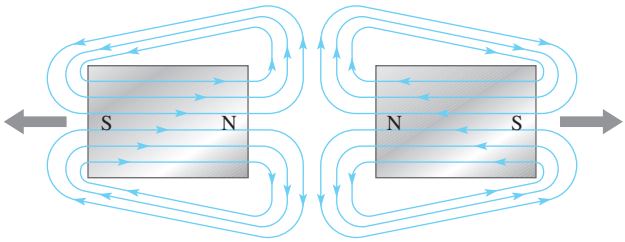

(b) Like poles repel.

▶ FIGURE 3

Effect of (a) nonmagnetic and (b) magnetic materials on a magnetic field.

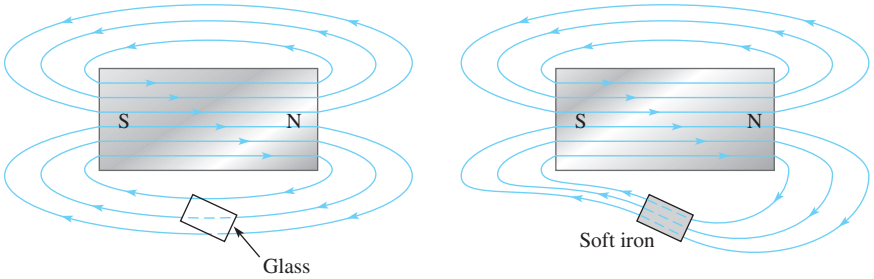

(a) (b)

HISTORY NOTE

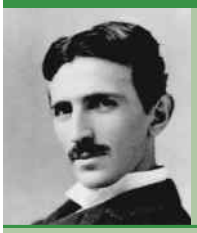

Nikola Tesla
1856–1943

Tesla was born in Croatia (then Austria-Hungary). He was an electrical engineer who invented the ac induction motor, polyphase ac systems, the Tesla coil transformer, wireless communications, and fluorescent lights. He worked for Edison when he first came to the U.S. in 1884 and later for Westinghouse. The SI unit of magnetic flux density is named in his honor. (Photo credit: Courtesy of the Nikola Tesla Museum, Belgrade, Yugoslavia.)

through iron or other materials is a consideration in the design of shields that prevent stray magnetic fields from affecting sensitive circuits.

Magnetic Flux (ϕ)

The group of force lines going from the north pole to the south pole of a magnet is called the **magnetic flux**, symbolized by ϕ (the lowercase Greek letter phi). A stronger field is represented by more lines of force. Several factors determine the strength of a magnet, including the material and physical geometry as well as the distance from the magnet. Magnetic field lines tend to be more concentrated at the poles.

The unit of magnetic flux is the **weber (Wb)**. One weber equals 10^8 lines. The weber is a very large unit; thus, in most practical situations, the microweber (μ Wb) is used. One microweber equals 100 lines of magnetic flux.

Magnetic Flux Density (B)

The **magnetic flux density** is the amount of flux per unit area perpendicular to the magnetic field. Its symbol is B, and its unit is the **tesla (T)**. One tesla equals one weber per square meter (Wb/m^2). The following formula expresses the flux density:

Equation 1

$$B = \frac{\phi}{A}$$

where ϕ is the flux in webers (Wb) and A is the cross-sectional area in square meters (m^2) of the magnetic field.

www.EngineeringBooksPdf.com

EXAMPLE 1

Compare the flux and the flux density in the two magnetic cores shown in Figure 4. The diagram represents the cross section of a magnetized material. Assume that each dot represents 100 lines or 1 μWb.

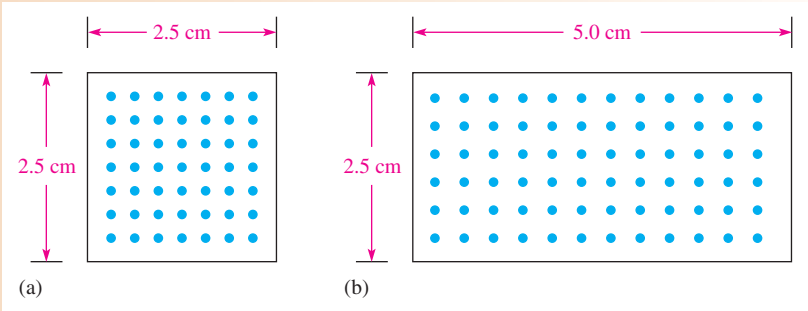

▲ FIGURE 4

Solution The flux is simply the number of lines. In Figure 4(a) there are 49 dots. Each represents 1 μWb, so the flux is 49 μWb. In Figure 4(b) there are 72 dots, so the flux is 72 μWb.

To calculate the flux density, first calculate the area in m^2. For Figure 4(a) the area is

$$A = l \times w = 0.025\text{ m} \times 0.025\text{ m} = 6.25 \times 10^{-4}\text{ m}^2$$

For Figure 4(b) the area is

$$A = l \times w = 0.025\text{ m} \times 0.050\text{ m} = 1.25 \times 10^{-3}\text{ m}^2$$

Use Equation 1 to calculate the flux density. For Figure 4(a) the flux density is

$$B = \frac{\phi}{A} = \frac{49\ \mu\text{Wb}}{6.25 \times 10^{-4}\text{ m}^2} = 78.4 \times 10^{-3}\text{ Wb/m}^2 = 78.4 \times 10^{-3}\text{ T}$$

For Figure 4(b) the flux density is

$$B = \frac{\phi}{A} = \frac{72\ \mu\text{Wb}}{1.25 \times 10^{-3}\text{ m}^2} = 57.6 \times 10^{-3}\text{ Wb/m}^2 = 57.6 \times 10^{-3}\text{ T}$$

The data in Table 1 compares the two cores. Note that the core with the largest flux does not necessarily have the highest flux density.

▶ TABLE 1

	FLUX (Wb)	AREA (m^2)	FLUX DENSITY (T)
Figure 4(a):	49 μWb	$6.25 \times 10^{-4}\text{ m}^2$	78.4×10^{-3} T
Figure 4(b):	72 μWb	$1.25 \times 10^{-3}\text{ m}^2$	57.6×10^{-3} T

*Related Problem** What is the flux density if the same flux shown in Figure 4(a) is in a core that is 5.0 cm × 5.0 cm?

*Answers are at the end of the chapter.

www.EngineeringBooksPdf.com

EXAMPLE 2

If the flux density in a certain magnetic material is 0.23 T and the area of the material is 0.38 in.^{2}, what is the flux through the material?

Solution First, 0.38 in.^{2} must be converted to square meters. 39.37 in. = 1 m; therefore,

$$A = 0.38\ \text{in.}^2\,[1\ \text{m}^2/(39.37\ \text{in.})^2] = 245 \times 10^{-6}\ \text{m}^2$$

The flux through the material is

$$\phi = BA = (0.23\ \text{T})(245 \times 10^{-6}\ \text{m}^2) = \mathbf{56.4\ \mu Wb}$$

Related Problem Calculate B if $A = 0.05$ in.^{2} and $\phi = 1000\ \mu$Wb.

The Gauss Although the tesla (T) is the SI unit for flux density, another unit called the **gauss (G)** from the CGS (centimeter-gram-second) system, is used (10^4 G = 1 T). In fact, the instrument used to measure flux density is the gaussmeter. A typical gaussmeter is shown in Figure 5. This particular gaussmeter is a portable unit with four ranges that can measure magnetic fields as small as the earth's field (about 0.5 G, but changes depending on location) to strong fields such as in an MRI unit (about 10,000 G). The unit *gauss* is still in widespread use, so you should be familiar with it as well as the *tesla.*

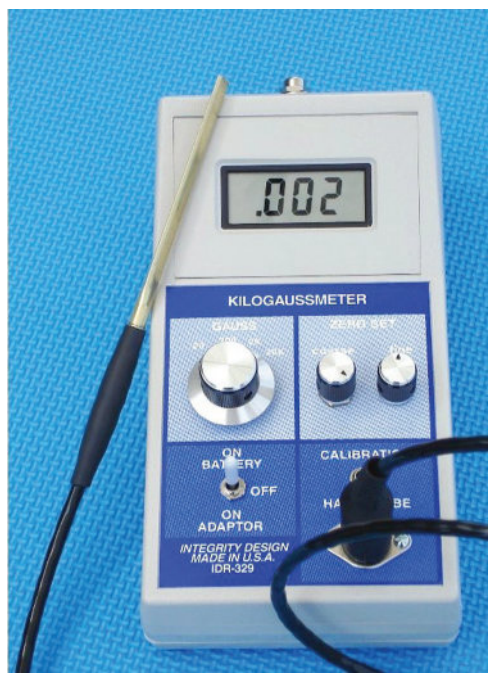

▶ **FIGURE 5**

A dc gaussmeter. (Integrity Model IDR-329 distributed by Less EMF Inc.)

How Materials Become Magnetized

Ferromagnetic materials such as iron, nickel, and cobalt become magnetized when placed in the magnetic field of a magnet. We have all seen a permanent magnet pick up paper clips, nails, or iron filings. In these cases, the object becomes magnetized (that is, it actually becomes a magnet itself) under the influence of the permanent magnetic field and becomes attracted to the magnet. When removed from the magnetic field, the object tends to lose its magnetism.

The magnetic material affects not only the magnetic flux density at the poles but also how the magnetic flux density falls off as distance from the poles increases. The physical size also affects the flux density. For example, two disk magnets (both made from sintered Alnico) have very similar densities near the pole, but the larger magnet has much higher flux density, as you move away from the pole, as shown in Figure 6. Notice that the flux

www.EngineeringBooksPdf.com

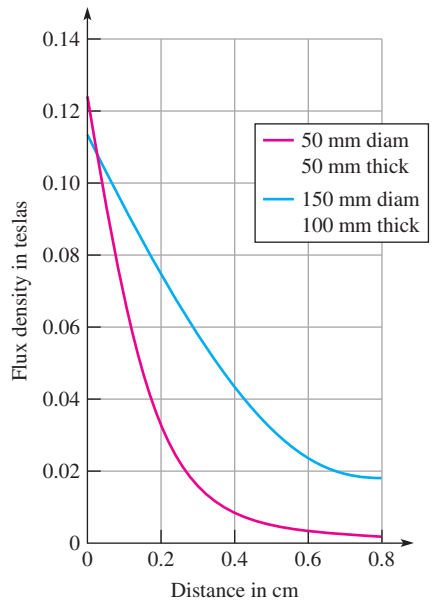

FIGURE 6

Example of magnetic flux densities for two disk magnets as a function of distance. The blue curve represents the larger magnet.

density falls off rapidly as you move away from the pole. This type of plot can illustrate if a given magnet is effective for a specific application that depends on the distance in which the magnet must work.

Ferromagnetic materials have minute magnetic domains created within their atomic structure by the orbital motion and spin of electrons. These domains can be viewed as very small bar magnets with north and south poles. When the material is not exposed to an external magnetic field, the magnetic domains are randomly oriented, as shown in Figure 7(a). When the material is placed in a magnetic field, the domains align themselves, as shown in part (b). Thus, the object itself effectively becomes a magnet.

HISTORY NOTE

Karl Friedrich Gauss 1777–1855

Gauss, a German mathematician, disproved many 18th century mathematical theories. Later, he worked closely with Weber on a worldwide system of stations for systematic observations of terrestrial magnetism. The most important result of their work in electromagnetism was the later development of telegraphy by others. The CGS unit of magnetic flux density is named in his honor. (Credit: Illustration by Steven S. Nau.)

(a) The magnetic domains (N ⟸ S) are randomly oriented in the unmagnetized material.

(b) The magnetic domains become aligned when the material is magnetized.

FIGURE 7

Ferromagnetic domains in (a) an unmagnetized and (b) a magnetized material.

The type of material is an important parameter for the actual flux density of magnets. Table 2 lists the flux densities of typical magnetic fields in teslas. For permanent magnets,

TABLE 2

Flux density of various magnetic fields.

SOURCE	TYPICAL FLUX DENSITY IN TESLAS (T)
Earth's magnetic field	4×10^{-5} (varies with location)
Small "refrigerator" magnets	0.08 to 0.1
Ceramic magnets	0.2 to 0.3
Alnico 5 reed switch magnet	0.1 to 0.2
Neodymium magnets	0.3 to 0.52
Magnetic resonance imaging (MRI)	1
The strongest steady magnetic field ever achieved in a laboratory	45

SAFETY NOTE

Many strong magnets are very brittle and can shatter on impact. Eye protection should always be worn when you work with strong magnets. Strong magnets are not toys and should not be given to children. People with pacemakers should stay away from strong magnetic fields.

www.EngineeringBooksPdf.com

the numbers given are based on the flux density of the field that is typical if measured close to the pole. As previously discussed, these values can drop significantly as distance from the poles is increased. The strongest field most people will ever experience is about 1 T (10,000 G) if they have an MRI exam. The strongest commercially available permanent magnets are neodymium-iron-boron composites (NdFeB). To find the flux density in gauss, multiply the values in teslas by 10^4 (10,000).

Applications

Permanent magnets are widely used in brushless motors (discussed in Section 7), magnetic separators, speakers, microphones, automobiles, and magnetic resonance-imaging devices. They are also commonly used in switches, such as the normally closed switch illustrated in Figure 8. When the magnet is near the switch mechanism, as in Figure 8 (a), the switch is closed. When the magnet is moved away, as in part (b), the spring pulls the arm open. Magnetic switches are widely used in security systems.

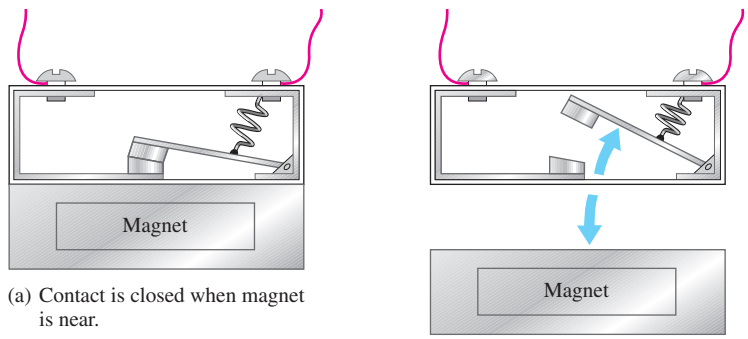

(a) Contact is closed when magnet is near.

(b) Contact opens when magnet is moved away.

▲ FIGURE 8

Operation of a magnetic switch.

HISTORY NOTE

Edwin Herbert Hall 1855–1938

The Hall effect was discovered by Hall in 1879 while he worked on his doctoral thesis in physics at Johns Hopkins University. Hall's experiments consisted of exposing thin gold leaf on a glass plate to a magnetic field and tapping off the gold leaf at points down its length. After applying a current through the gold leaf, he observed a tiny voltage across the tap points. (Photo credit: Voltiana, Como, Italy-September 10, 1927 issue, courtesy AIP Emilio Segre Visual Archives.)

Another important application of permanent magnets is in sensors that take advantage of an effect known as the Hall effect. The **Hall effect** is the occurrence of a small voltage (a few μV) that is generated on opposite sides of a thin current-carrying conductor or semiconductor (the Hall element) that is in a magnetic field. A voltage called the Hall voltage appears across the Hall element, as illustrated in Figure 9. The Hall voltage is due to the forces exerted on the electrons as they traverse the magnetic field, causing an excess of charge on one side of the Hall element. Although the effect was first noticed in a conductor, it is more pronounced in semiconductors, which are

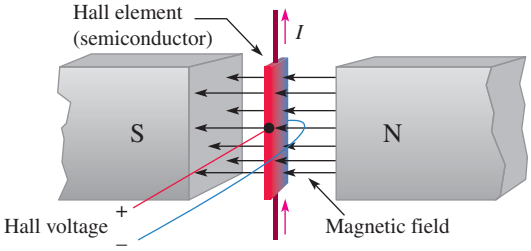

▲ FIGURE 9

The Hall effect. The Hall voltage is induced across the Hall element—the red side is positive; the blue side is negative.

www.EngineeringBooksPdf.com

normally used in Hall-effect sensors. Notice that the magnetic field, the electric current, and the Hall voltage are all at right angles to each other. This voltage is amplified and can be used to detect the presence of the magnetic field. The detection of a magnetic field is useful in sensor applications.

Hall-effect sensors are widely used because they are small, inexpensive, and have no moving parts. In addition, they are noncontacting sensors, so they can last for billions of repeated operations, a clear advantage over contacting sensors that can wear out. Hall-effect sensors can detect the nearby presence of a magnet by sensing its magnetic field. For this reason, they can be used for position measurements or for sensing motion. They are used in conjunction with other sensor elements to measure current, temperature, or pressure.

There are many applications for Hall-effect sensors. In automobiles, Hall-effect sensors are used to measure various parameters such as throttle angle, crankshaft and camshaft positions, distributor position, tachometer, power seat and rear-view mirror positions. A few other applications for Hall-effect sensors include measuring parameters for rotating devices such as drills, fans, flow meter vanes, and disk speed detection. They are also used in dc motors as will be seen in Section 7.

SECTION 1 CHECKUP
Answers are at the end of the chapter.

1. When the north poles of two magnets are placed close together, do they repel or attract each other?
2. What is the difference between magnetic flux and magnetic flux density?
3. What are two units for measuring magnetic flux density?
4. What is the flux density when $\phi = 4.5\ \mu\text{Wb}$ and $A = 5 \times 10^{-3}\ \text{m}^2$?

2 ELECTROMAGNETISM

Electromagnetism is the production of a magnetic field by current in a conductor.

After completing this section, you should be able to

- **Explain the principles of electromagnetism**
  - Determine the direction of the magnetic lines of force
  - Define *permeability*
  - Define *reluctance*
  - Define *magnetomotive force*
  - Describe a basic electromagnet

Current produces a magnetic field, called an **electromagnetic field**, around a conductor, as illustrated in Figure 10. The invisible lines of force of the magnetic field form a concentric circular pattern around the conductor and are continuous along its length. The direction of the lines of force surrounding a conductor for the given current direction is as indicated. The lines of force are in a clockwise direction. When current is reversed, the magnetic field lines are in a counterclockwise direction.

Although the magnetic field cannot be seen, it is capable of producing visible effects. For example, if a current-carrying wire is inserted through a sheet of paper in a perpendicular direction, iron filings placed on the surface of the paper arrange themselves along the

www.EngineeringBooksPdf.com

▶ **FIGURE 10**

Magnetic field around a current-carrying conductor. The red arrows indicate the direction of electron (− to +) current.

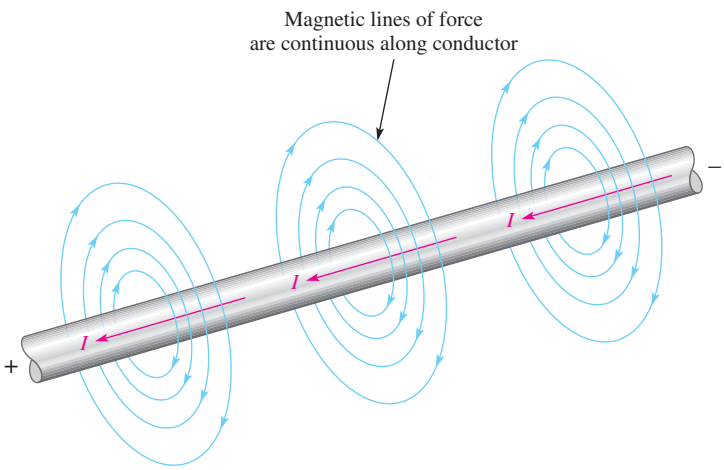

▶ **FIGURE 11**

Visible effects of an electromagnetic field.

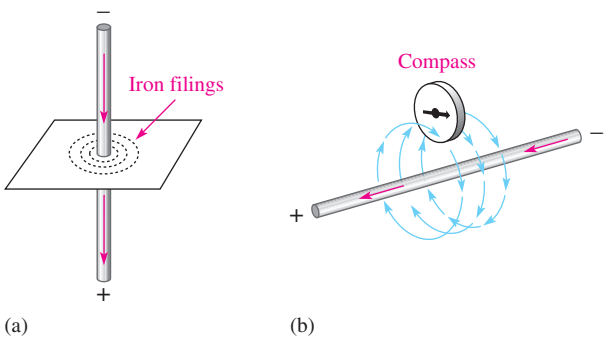

magnetic lines of force in concentric rings, as illustrated in Figure 11(a). Part (b) of the figure illustrates that the needle of a compass placed in the electromagnetic field will point in the direction of the lines of force. The field is stronger closer to the conductor and becomes weaker with increasing distance from the conductor.

Left-Hand Rule An aid to remembering the direction of the lines of force is illustrated in Figure 12. Imagine that you are grasping the conductor with your left hand, with your thumb pointing in the direction of current. Your fingers indicate the direction of the magnetic lines of force.

▶ **FIGURE 12**

Illustration of left-hand rule. The left hand rule is used for electron flow current (− to +).

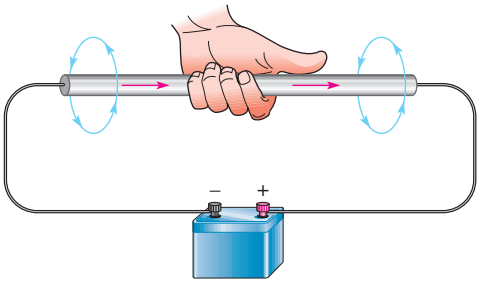

Electromagnetic Properties

Several important properties related to electromagnetic fields are now discussed.

Permeability (μ) The ease with which a magnetic field can be established in a given material is measured by the **permeability** of that material. The higher the permeability, the more easily a magnetic field can be established. The symbol of permeability is μ (the Greek letter mu).

www.EngineeringBooksPdf.com

A material's permeability depends on its type. The permeability of a vacuum (μ_0) is 4×10^{-7} Wb/At · m (webers/ampere-turn · meter) and is used as a reference. Ferromagnetic materials typically have permeabilities hundreds of times larger than that of a vacuum, indicating that a magnetic field can be set up with relative ease in these materials. Ferromagnetic materials include iron, steel, nickel, cobalt, and their alloys.

The *relative permeability* (μ_r) of a material is the ratio of its absolute permeability (μ) to the permeability of a vacuum (μ_0).

$$\mu_r = \frac{\mu}{\mu_0}$$ **Equation 2**

Because it is a ratio of permeabilities, μ_r has no units. Typical magnetic materials, such as iron, have a relative permeability of a few hundred. Highly permeable materials can have a relative permeability as high as 100,000.

Reluctance (ℛ) The opposition to the establishment of a magnetic field in a material is called **reluctance (ℛ)**. The value of reluctance is directly proportional to the length (l) of the magnetic path, and inversely proportional to the permeability (μ) and to the cross-sectional area (A) of the material, as expressed by the following equation:

$$\mathcal{R} = \frac{l}{\mu A}$$ **Equation 3**

Reluctance in magnetic circuits is analogous to resistance in electric circuits. The unit of reluctance can be derived using l in meters, A (area) in square meters, and μ in Wb/At · m as follows:

$$\mathcal{R} = \frac{l}{\mu A} = \frac{\cancel{\text{m}}}{(\text{Wb/At} \cdot \cancel{\text{m}})(\cancel{\text{m}}^2)} = \frac{\text{At}}{\text{Wb}}$$

At/Wb is ampere-turns/weber.

Equation 3 is similar to the following equation for determining wire resistance:

$$R = \frac{\rho l}{A}$$

The reciprocal of resistivity (ρ) is conductivity (σ). By substituting $1/\sigma$ for ρ, this equation can be written as

$$R = \frac{l}{\sigma A}$$

Compare this last equation for wire resistance with Equation 3. The length (l) and the area (A) have the same meaning in both equations. The conductivity (σ) in electrical circuits is analogous to permeability (μ) in magnetic circuits. Also, resistance (R) in electric circuits is analogous to reluctance ($\mathcal{R}$) in magnetic circuits; both are oppositions. Typically, the reluctance of a magnetic circuit is 50,000 At/Wb or more, depending on the size and type of material.

EXAMPLE 3

Calculate the reluctance of a torus (a doughnut-shaped core) made of low-carbon steel. The inner radius of the torus is 1.75 cm and the outer radius of the torus is 2.25 cm. Assume the permeability of low-carbon steel is 2×10^{-4} Wb/At · m.

Solution You must convert centimeters to meters before you calculate the area and length. From the dimensions given, the thickness (diameter) is 0.5 cm = 0.005 m. Thus, the cross-sectional area is

$$A = \pi r^2 = \pi(0.0025)^2 = 1.96 \times 10^{-5}\ \text{m}^2$$

www.EngineeringBooksPdf.com

The length is equal to the circumference of the torus measured at the average radius of 2.0 cm or 0.020 m.

$$l = C = 2\pi r = 2\pi(0.020\text{ m}) = 0.125\text{ m}$$

Substituting values into Equation 3,

$$\mathcal{R} = \frac{l}{\mu A} = \frac{0.125\text{ m}}{(2 \times 10^{-4}\text{ Wb/At}\cdot\text{m})(1.96 \times 10^{-5}\text{ m}^2)} = \mathbf{31.9 \times 10^6\ At/Wb}$$

Related Problem What happens to the reluctance if cast steel with a permeability of 5×10^{-4} Wb/At · m is substituted for the cast iron core?

EXAMPLE 4

Mild steel has a relative permeability of 800. Calculate the reluctance of a mild steel core that has a length of 10 cm, and has a cross section of 1.0 cm × 1.2 cm.

Solution First, determine the permeability of mild steel.

$$\mu = \mu_0\mu_r = (4\pi \times 10^{-7}\text{ Wb/At}\cdot\text{m})(800) = 1.00 \times 10^{-3}\text{ Wb/At}\cdot\text{m}$$

Next, convert the length to meters and the area to square meters.

$$l = 10\text{ cm} = 0.10\text{ m}$$
$$A = 0.010\text{ m} \times 0.012\text{ m} = 1.2 \times 10^{-4}\text{ m}^2$$

Substituting values into Equation 3,

$$\mathcal{R} = \frac{l}{\mu A} = \frac{0.10\text{ m}}{(1.00 \times 10^{-3}\text{ Wb/At}\cdot\text{m})(1.2 \times 10^{-4}\text{ m}^2)} = \mathbf{8.33 \times 10^5\ At/Wb}$$

Related Problem What happens to the reluctance if the core is made from 78 Permalloy with a relative permeability of 4000?

Magnetomotive Force (mmf) As you have learned, current in a conductor produces a magnetic field. The cause of a magnetic field is called the **magnetomotive force (mmf)**. Magnetomotive force is something of a misnomer because in a physics sense mmf is not really a force, but rather it is a direct result of the movement of charge (current). The unit of mmf, the **ampere-turn (At)**, is established on the basis of the current in a coil of wire. The formula for mmf is

Equation 4

$$F_m = NI$$

where F_m is the magnetomotive force, N is the number of turns of wire, and I is the current in amperes.

Figure 13 illustrates that a number of turns of wire carrying a current around a magnetic material creates a force that sets up flux lines through the magnetic path. The amount of flux depends on the magnitude of the mmf and on the reluctance of the material, as expressed by the following equation:

Equation 5

$$\phi = \frac{F_m}{\mathcal{R}}$$

Equation 5 is known as the *Ohm's law for electromagnetic circuits* because the flux (ϕ) is analogous to current, the mmf (F_m) is analogous to voltage, and the reluctance ($\mathcal{R}$) is analogous to resistance. Like other phenomena in science, the flux is an effect, the mmf is a cause, and the reluctance is an opposition.

www.EngineeringBooksPdf.com

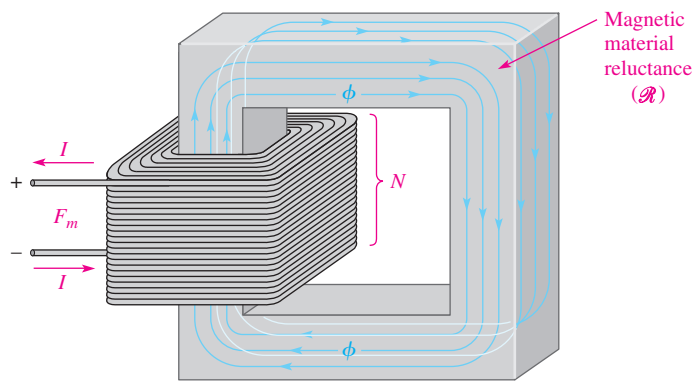

FIGURE 13

A basic electromagnetic circuit.

One important difference between an electric circuit and a magnetic circuit is that in magnetic circuits, Equation 5 is only valid up to a certain point before the magnetic material saturates (flux becomes a maximum). You will see this when you look at magnetization curves in Section 4. Another difference that was already noted is that flux does occur in permanent magnets with no source of mmf. In a permanent magnet, the flux is due to internal electron motion rather than to an external current. No equivalent effect occurs in electric circuits.

EXAMPLE 5

How much flux is established in the magnetic path of Figure 14 if the reluctance of the material is 2.8×10^5 At/Wb?

FIGURE 14

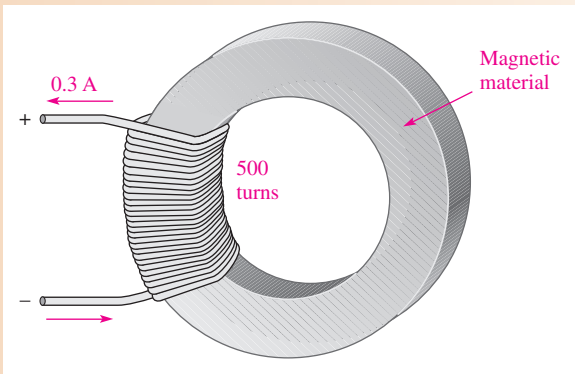

Solution

$$\phi = \frac{F_m}{\mathcal{R}} = \frac{NI}{\mathcal{R}} = \frac{(500\text{ t})(0.3\text{ A})}{2.8 \times 10^5\text{ At/Wb}} = 5.36 \times 10^{-4}\text{ Wb} = \mathbf{536\ \mu Wb}$$

Related Problem How much flux is established in the magnetic path of Figure 14 if the reluctance is 7.5×10^3 At/Wb, the number of turns is 300, and the current is 0.18 A?

EXAMPLE 6

There is 0.1 ampere of current through a coil with 400 turns.

(a) What is the mmf?

(b) What is the reluctance of the circuit if the flux is 250 μWb?

www.EngineeringBooksPdf.com

Solution **(a)** $N = 400$ and $I = 0.1$ A

$$F_m = NI = (400\text{ t})(0.1\text{ A}) = \mathbf{40\ At}$$

(b) $$\mathcal{R} = \frac{F_m}{\phi} = \frac{40\text{ At}}{250\ \mu\text{Wb}} = \mathbf{1.60 \times 10^5\ At/Wb}$$

Related Problem Rework the example for $I = 85$ mA, $N = 500$, and $\phi = 500\ \mu$Wb.

In many magnetic circuits, the core is not continuous. For example, if an air gap is cut into the core, it will increase the reluctance of the magnetic circuit. This means that more current is required to establish the same flux as before because an air gap represents a significant opposition to establishing flux. The situation is analogous to a series electrical circuit; the total reluctance of the magnetic circuit is the sum of the reluctance of the core and the reluctance of the air gap.

The Electromagnet

An electromagnet is based on the properties that you have just learned. A basic electromagnet is simply a coil of wire wound around a core material that can be easily magnetized.

The shape of the electromagnet can be designed for various applications. For example, Figure 15 shows a U-shaped magnetic core. When the coil of wire is connected to a battery and there is current, as shown in part (a), a magnetic field is established as indicated. If the current is reversed, as shown in part (b), the direction of the magnetic field is also reversed. The closer the north and south poles are brought together, the smaller the air gap between them becomes, and the easier it becomes to establish a magnetic field because the reluctance is reduced.

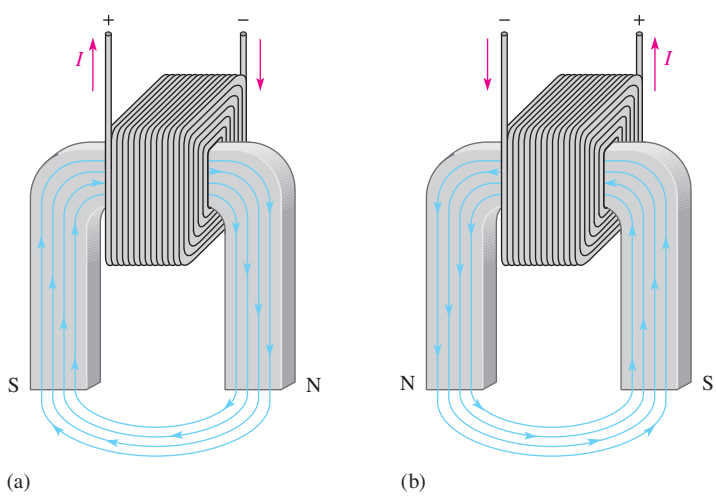

▶ **FIGURE 15**

Reversing the current in the coil causes the electromagnetic field to reverse.

SECTION 2 CHECKUP

1. Explain the difference between magnetism and electromagnetism.
2. What happens to the magnetic field in an electromagnet when the current through the coil is reversed?
3. State Ohm's law for electromagnetic circuits.
4. Compare each quantity in Question 3 to its electrical counterpart.

www.EngineeringBooksPdf.com

3 ELECTROMAGNETIC DEVICES

Many types of useful devices such as tape recorders, electric motors, speakers, solenoids, and relays are based on electromagnetism. The transformer is another important example, but is not covered here.

After completing this section, you should be able to

- **Describe the principle of operation for several types of electromagnetic devices**
  - Discuss how a solenoid and a solenoid valve work
  - Discuss how a relay works
  - Discuss how a speaker works
  - Discuss the basic analog meter movement
  - Explain a magnetic disk and tape read/write operation
  - Explain the concept of the magneto-optical disk

The Solenoid

The **solenoid** is a type of electromagnetic device that has a movable iron core called a *plunger*. The movement of this iron core depends on both an electromagnetic field and a mechanical spring force. The basic structure of a solenoid is shown in Figure 16. It consists of a cylindrical coil of wire wound around a nonmagnetic hollow form. A stationary iron core is fixed in position at the end of the shaft, and a sliding iron core is attached to the stationary core with a spring.

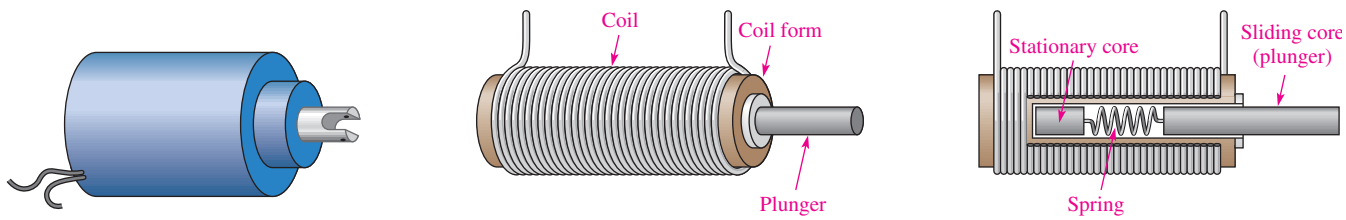

(a) Solenoid (b) Basic construction (c) Cutaway view

▲ FIGURE 16

Basic solenoid structure.

In the at-rest (or unenergized) state, the plunger is extended as shown in Figure 17(a). The solenoid is energized by current through the coil, as shown in part (b). The current sets up an electromagnetic field that magnetizes both iron cores as indicated. The south pole of the stationary core attracts the north pole of the movable core, which causes it to slide inward, thus retracting the plunger and compressing the spring. As long as there is coil current, the plunger remains retracted by the attractive force of the magnetic fields. When the current is cut off, the magnetic fields collapse; and the force of the compressed spring pushes the plunger back out. The solenoid is used for applications such as opening and closing valves and automobile door locks.

www.EngineeringBooksPdf.com

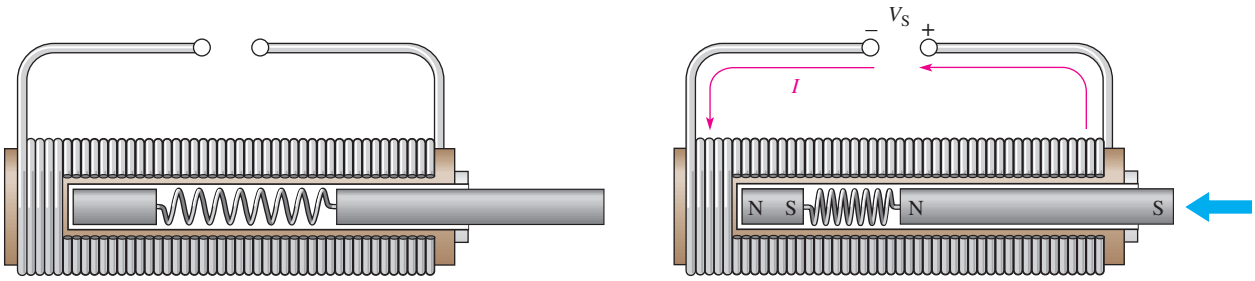

(a) Unenergized (no voltage or current)– plunger extended

(b) Energized – plunger retracted

▲ FIGURE 17

Basic solenoid operation.

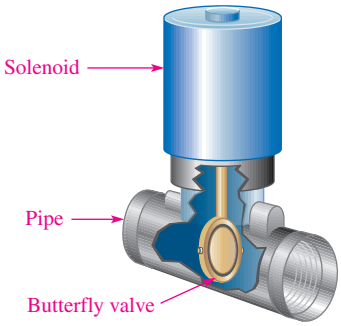

▲ FIGURE 18

A basic solenoid valve structure.

Solenoid Valves In industrial controls, **solenoid valves** are widely used to control the flow of air, water, steam, oils, refrigerants, and other fluids. Solenoid valves are used in both pneumatic (air) and hydraulic (oil) systems, common in machine controls. Solenoid valves are also common in the aerospace and medical fields. Solenoid valves can either move a plunger to open or close a port or can rotate a blocking flap a fixed amount.

A solenoid valve consists of two functional units: a solenoid coil that provides the magnetic field to provide the required movement to open or close the valve and a valve body, which is isolated from the coil assembly via a leakproof seal and includes a pipe and butterfly valve. Figure 18 shows a cutaway of one type of solenoid valve. When the solenoid is energized, the butterfly valve is turned to open a normally closed (NC) valve or to close a normally open (NO) valve.

Solenoid valves are available with a wide variety of configurations including normally open or normally closed valves. They are rated for different types of fluids (for example, gas or water), pressures, number of pathways, sizes, and more. The same valve may control more than one line and may have more than one solenoid to move.

The Relay

Relays differ from solenoids in that the electromagnetic action is used to open or close electrical contacts rather than to provide mechanical movement. Figure 19 shows the basic operation of an armature-type relay with one normally open (NO) contact and one normally closed (NC) contact (single pole–double throw). When there is no coil current, the armature is held against the upper contact by the spring, thus providing continuity from terminal 1 to terminal 2, as shown in Figure 19(a). When energized with coil current, the armature is pulled down by the attractive force of the electromagnetic field and makes connection with the lower contact to provide continuity from terminal 1 to terminal 3, as shown in Figure 19(b).

▶ FIGURE 19

Basic structure of a single-pole–double-throw armature relay.

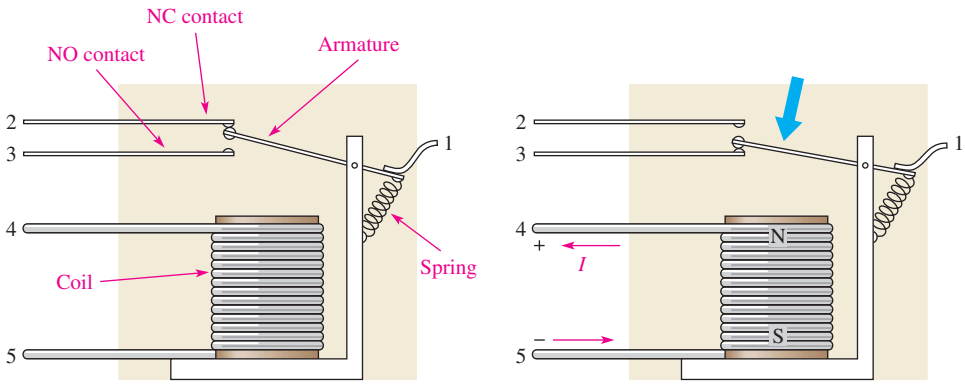

(a) Unenergized: continuity from terminal 1 to terminal 2

(b) Energized: continuity from terminal 1 to terminal 3

www.EngineeringBooksPdf.com

A typical armature relay and its schematic symbol are shown in Figure 20.

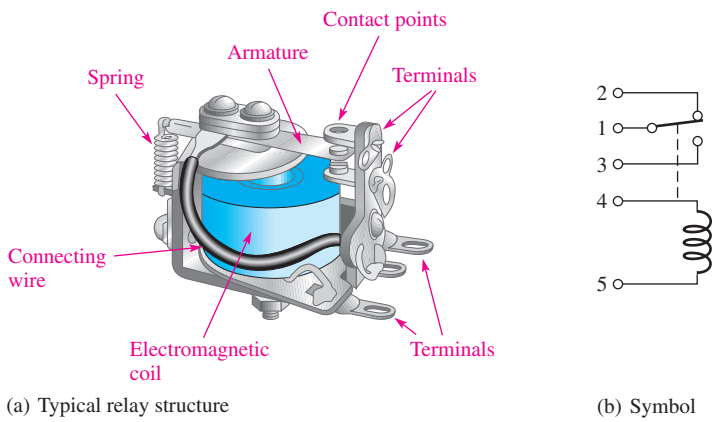

(a) Typical relay structure (b) Symbol

FIGURE 20
A typical armature relay.

Another widely used type of relay is the *reed relay,* which is shown in Figure 21. The reed relay, like the armature relay, uses an electromagnetic coil. The contacts are thin reeds of magnetic material and are usually located inside the coil. When there is no coil current, the reeds are in the open position as shown in Figure 21(b). When there is current through the coil, the reeds make contact because they are magnetized and attract each other as shown in part (c).

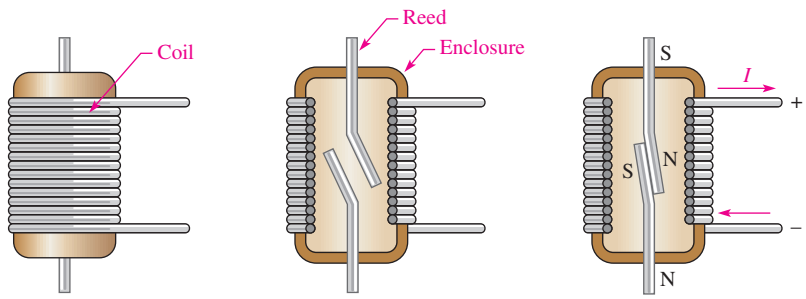

(a) (b) Unenergized (c) Energized

FIGURE 21
Basic structure of a reed relay.

Reed relays are faster, are more reliable, and produce less contact arcing than armature relays. However, they have less current-handling capability than armature relays and are more susceptible to mechanical shock.

The Speaker

A **speaker** is an electromagnetic device that converts electrical signals into sound. Essentially, it is a linear motor that alternately attracts and repels an electromagnet to and from a permanent magnet called a donut magnet. Figure 22 shows the key parts of a speaker. The audio signal is connected using very flexible wires to a cylindrical coil called the voice coil. The voice coil and its movable core form an electromagnet, which is suspended in an accordion-like structure called the spider. The spider acts like an accordion spring, keeping the voice coil in the center and restoring it to the rest position when there is no input signal.

Current from the audio input alternates back and forth and powers the electromagnet; when there is more current, the attraction or repulsion is greater. When the input current reverses direction, the polarity of the electromagnet reverses direction also, faithfully following the input signal. The voice coil and its moving magnet are firmly attached to the cone. The cone is a flexible diaphragm that vibrates to produce sound.

www.EngineeringBooksPdf.com

▶ FIGURE 22

Key parts of a speaker (cutaway view).

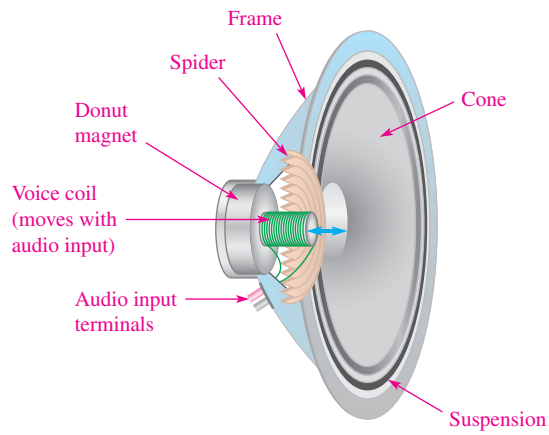

Meter Movement

The d'Arsonval meter movement is the most common type used in analog multimeters. In this type of meter movement, the pointer is deflected in proportion to the amount of current through a coil. Figure 23 shows a basic d'Arsonval meter movement. It consists of a coil of wire wound on a bearing-mounted assembly that is placed between the poles of a permanent magnet. A pointer is attached to the moving assembly. With no current through the coil, a spring mechanism keeps the pointer at its left-most (zero) position. When there is current through the coil, electromagnetic forces act on the coil, causing a rotation to the right. The amount of rotation depends on the amount of current.

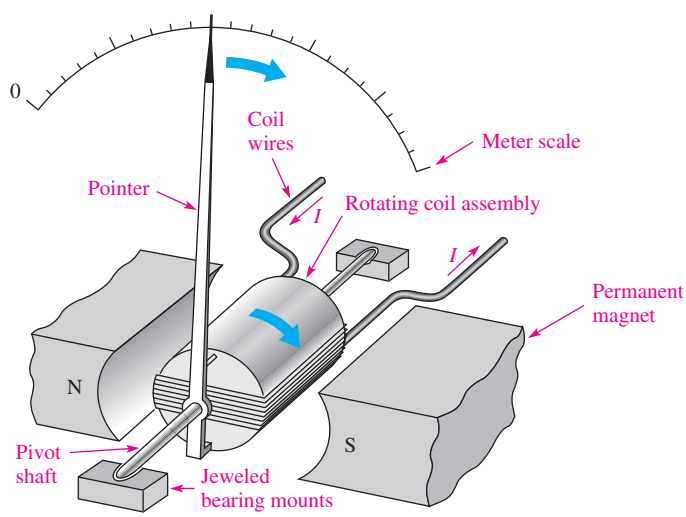

▲ FIGURE 23

The basic d'Arsonval meter movement.

Figure 24 illustrates how the interaction of magnetic fields produces rotation of the coil assembly. Current is inward at the "cross" and outward at the "dot" in the single winding shown. The inward current produces a counterclockwise electromagnetic field that reinforces the permanent magnetic field below it. The result is an upward force on the left side of the coil as shown. A downward force is developed on the right side of the coil, where the current is outward. These forces produce a clockwise rotation of the coil assembly and are opposed by a spring mechanism. The indicated forces and the spring force are balanced at the value of the current. When current is removed, the spring force returns the pointer to its zero position.

www.EngineeringBooksPdf.com

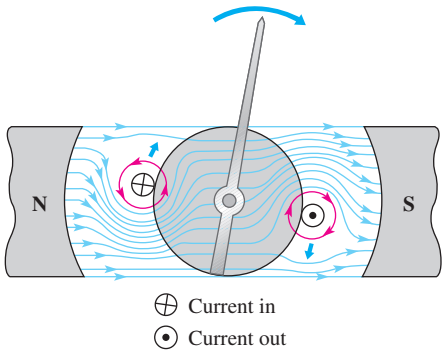

◀ FIGURE 24

When the electromagnetic field interacts with the permanent magnetic field, forces are exerted on the rotating coil assembly, causing it to move clockwise and thus deflecting the pointer.

Magnetic Disk and Tape Read/Write Head

A simplified diagram of a magnetic disk or tape surface read/write operation is shown in Figure 25. A data bit (1 or 0) is written on the magnetic surface by the magnetization of a small segment of the surface as it moves by the write head. The direction of the magnetic flux lines is controlled by the direction of the current pulse in the winding, as shown in Figure 25(a) for the case of a positive pulse. At the air gap in the write head, the magnetic flux takes a path through the surface of the storage device. This magnetizes a small spot on the surface in the direction of the field. A magnetized spot of one polarity represents a binary 1, and one of the opposite polarity represents a binary 0. Once a spot on the surface is magnetized, it remains until written over with an opposite magnetic field.

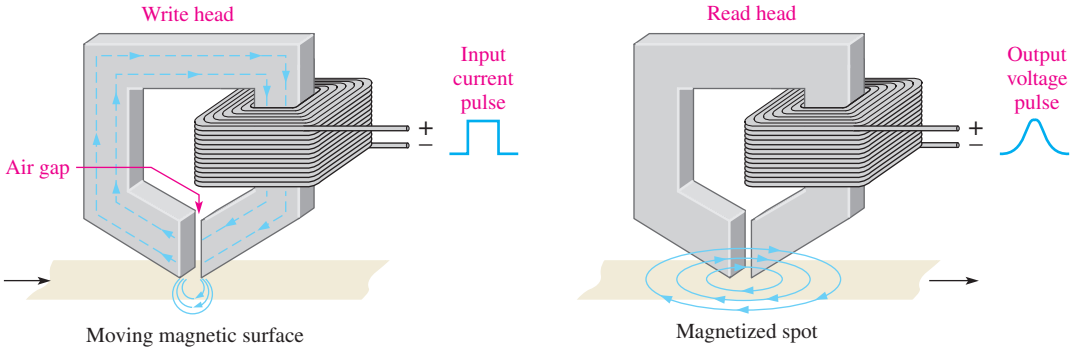

(a) The magnetic flux from the write head follows the low reluctance path through the moving magnetic surface.

(b) When read head passes over magnetized spot, an induced voltage appears at the output.

▲ FIGURE 25

Read/write function on a magnetic surface.

When the magnetic surface passes a read head, the magnetized spots produce magnetic fields in the read head, which induce voltage pulses in the winding. The polarity of these pulses depends on the direction of the magnetized spot and indicates whether the stored bit is a 1 or a 0. This process is illustrated in Figure 25(b). Often the read and write heads are combined into a single unit.

The Magneto-Optical Disk

The magneto-optical disk uses an electromagnet and laser beams to read and write (record) data on a magnetic surface. Magneto-optical disks are formatted in tracks and sectors similar to magnetic floppy disks and hard disks. However, because of the ability of a laser beam to be precisely directed to an extremely small spot, magneto-optical disks are capable of storing much more data than standard magnetic hard disks.

www.EngineeringBooksPdf.com

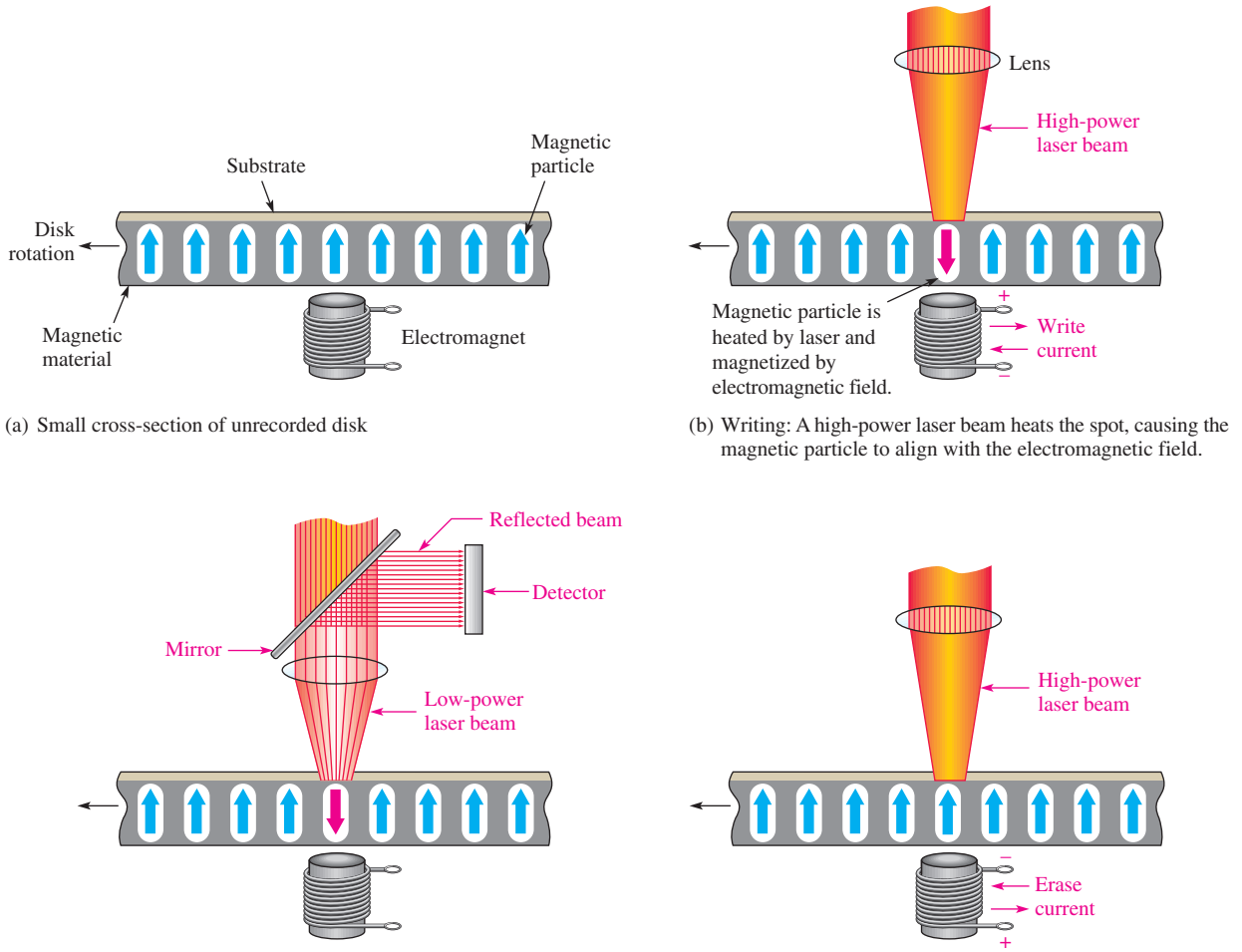

(a) Small cross-section of unrecorded disk

(b) Writing: A high-power laser beam heats the spot, causing the magnetic particle to align with the electromagnetic field.

(c) Reading: A low-power laser beam reflects off of the reversed-polarity magnetic particle and its polarization shifts. If the particle is not reversed, the polarization of the reflected beam is unchanged.

(d) Erasing: The electromagnetic field is reversed as the high-power laser beam heats the spot, causing the magnetic particle to be restored to the original polarity.

▲ **FIGURE 26**

Basic concept of the magneto-optical disk.

Figure 26(a) illustrates a small cross-sectional area of a disk before recording, with an electromagnet positioned below it. Tiny magnetic particles, represented by the arrows, are all magnetized in the same direction.

Writing (recording) on the disk is accomplished by applying an external magnetic field opposite to the direction of the magnetic particles as indicated in Figure 26(b) and then directing a high-power laser beam to heat the disk at a precise spot where a binary 1 is to be stored. The disk material, a magneto-optic alloy, is highly resistant to magnetization at room temperature; but at the spot where the laser beam heats the material, the inherent direction of magnetism is reversed by the external magnetic field produced by the electromagnet. At points where binary 0s are to be stored, the laser beam is not applied and the inherent upward direction of the magnetic particle remains.

As illustrated in Figure 26(c), reading data from the disk is accomplished by turning off the external magnetic field and directing a low-power laser beam at a spot where a bit is to be read. Basically, if a binary 1 is stored at the spot (reversed magnetization), the low-power laser beam is reflected and its polarization is shifted; but if a binary 0 is stored, the polarization of the reflected laser beam is unchanged. A detector senses the difference in the polarity of the reflected laser beam to determine if the bit being read is a 1 or a 0.

www.EngineeringBooksPdf.com

Figure 26(d) shows that the disk is erased by restoring the original magnetic direction of each particle by reversing the external magnetic field and applying the high-power laser beam.

SECTION 3 CHECKUP

1. Explain the difference between a solenoid and a relay.
2. What is the movable part of a solenoid called?
3. What is the movable part of a relay called?
4. Upon what basic principle is the d'Arsonval meter movement based?

4 MAGNETIC HYSTERESIS

When a magnetizing force is applied to a material, the magnetic flux density in the material changes in a certain way.

After completing this section, you should be able to

- **Explain magnetic hysteresis**
  - State the formula for magnetic field intensity
  - Discuss a hysteresis curve
  - Define *retentivity*

Magnetic Field Intensity (*H*)

The **magnetic field intensity** (also called *magnetizing force*) in a material is defined to be the magnetomotive force (F_m) per unit length (l) of the material, as expressed by the following equation. The unit of magnetic field intensity (H) is ampere-turns per meter (At/m).

$$H = \frac{F_m}{l} \qquad \text{Equation 6}$$

where $F_m = NI$. Note that the magnetic field intensity (H) depends on the number of turns (N) of the coil of wire, the current (I) through the coil, and the length (l) of the material. It does not depend on the type of material.

Since $\phi = F_m/\mathcal{R}$, as F_m increases, the flux increases. Also, the magnetic field intensity (H) increases. Recall that the flux density (B) is the flux per unit cross-sectional area ($B = \phi/A$), so B is also proportional to H. The curve showing how these two quantities (B and H) are related is called the B-H curve, or the hysteresis curve. The parameters that influence both B and H are illustrated in Figure 27.

The Hysteresis Curve and Retentivity

Hysteresis is a characteristic of a magnetic material whereby a change in magnetization lags the application of the magnetic field intensity. The magnetic field intensity (H) can be readily increased or decreased by varying the current through the coil of wire, and it can be reversed by reversing the voltage polarity across the coil.

Figure 28 illustrates the development of the hysteresis curve. Let's start by assuming a magnetic core is unmagnetized so that $B = 0$. As the magnetic field intensity (H) is increased from zero, the flux density (B) increases proportionally as indicated by the curve in Figure 28(a). When H reaches a certain value, the value of B begins to level off. As H continues to

www.EngineeringBooksPdf.com

▶ **FIGURE 27**

Parameters that determine the magnetic field intensity (H) and the flux density (B).

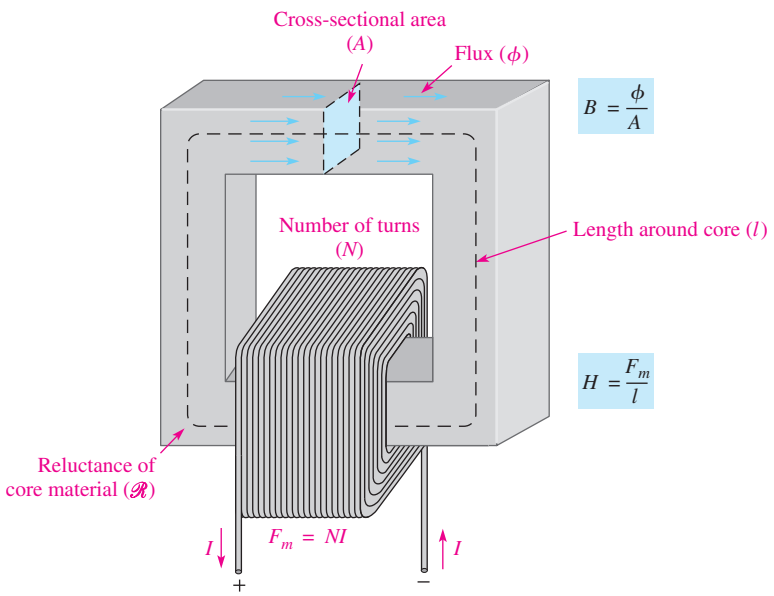

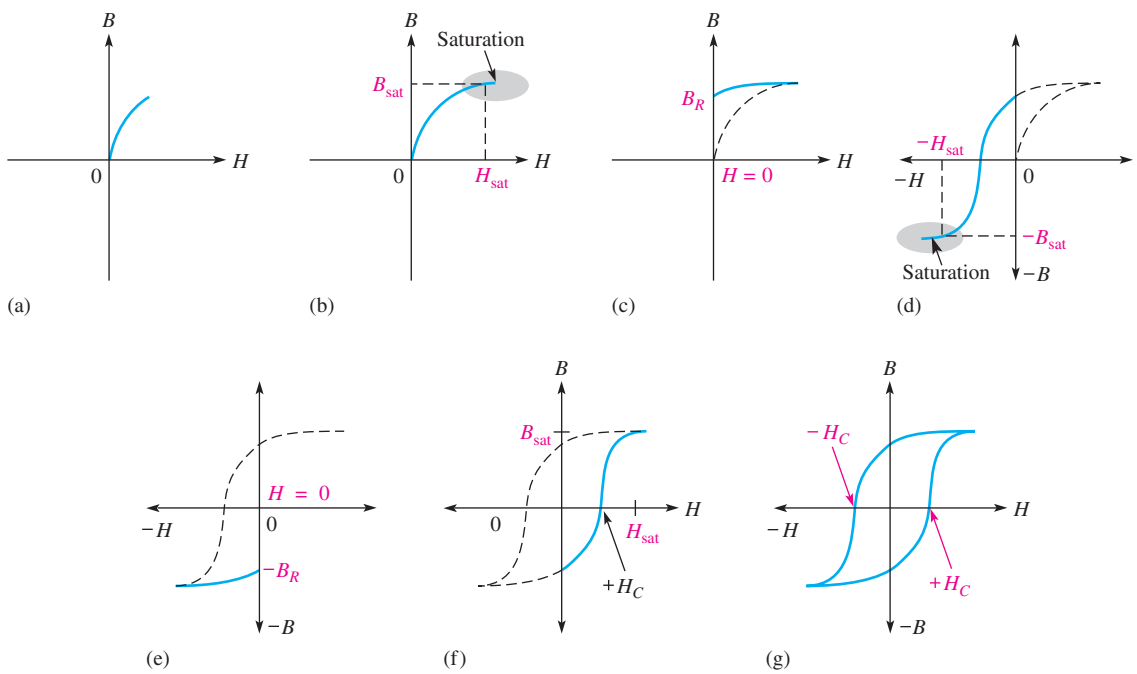

▲ **FIGURE 28**

Development of a magnetic hysteresis (B-H) curve.

increase, B reaches a saturation value (B_{sat}) when H reaches a value (H_{sat}), as illustrated in Figure 28(b). Once saturation is reached, a further increase in H will not increase B.

Now, if H is decreased to zero, B will fall back along a different path to a residual value (B_R), as shown in Figure 28(c). This indicates that the material continues to be magnetized even when the magnetic field intensity is removed ($H = 0$). The ability of a material, once magnetized, to maintain a magnetized state without magnetic field intensity is called **retentivity**. The retentivity of a material is indicated by the ratio of B_R to B_{sat}.

Reversal of the magnetic field intensity is represented by negative values of H on the curve and is achieved by reversing the current in the coil of wire. An increase in H in the

www.EngineeringBooksPdf.com

negative direction causes saturation to occur at a value ($-H_{sat}$) where the flux density is at its maximum negative value, as indicated in Figure 28(d).

When the magnetic field intensity is removed ($H = 0$), the flux density goes to its negative residual value ($-B_R$), as shown in Figure 28(e). From the $-B_R$ value, the flux density follows the curve indicated in part (f) back to its maximum positive value when the magnetic field intensity equals H_{sat} in the positive direction.

The complete *B-H* curve is shown in Figure 28(g) and is called the *hysteresis curve.* The magnetic field intensity required to make the flux density zero is called the *coercive force,* H_C.

Materials with a low retentivity do not retain a magnetic field very well while those with high retentivities exhibit values of B_R very close to the saturation value of B. Depending on the application, retentivity in a magnetic material can be an advantage or a disadvantage. In permanent magnets and memory cores, for example, high retentivity is required. In ac motors, retentivity is undesirable because the residual magnetic field must be overcome each time the current reverses, thus wasting energy.

SECTION 4 CHECKUP

1. For a given wirewound core, how does an increase in current through the coil affect the flux density?
2. Define *retentivity.*

5 ELECTROMAGNETIC INDUCTION

In this section, you are introduced to electromagnetic induction. Electromagnetic induction is what makes transformers, electrical generators, electrical motors, and many other devices possible.

After completing this section, you should be able to

- **Discuss the principle of electromagnetic induction**
  - Explain how voltage is induced in a conductor in a magnetic field
  - Determine polarity of an induced voltage
  - Discuss forces on a conductor in a magnetic field
  - State Faraday's law
  - State Lenz's law
  - Explain how a crankshaft position sensor works

Relative Motion

When a straight conductor is moved perpendicular to a magnetic field, there is a relative motion between the conductor and the magnetic field. Likewise, when a magnetic field is moved past a stationary conductor, there is also relative motion. In either case, this relative motion results in an **induced voltage (v_{ind})** across the conductor, as Figure 29 indicates. This principle is known as **electromagnetic induction**. The lowercase v stands for instantaneous voltage. The amount of the induced voltage depends on the rate at which the conductor and the magnetic field move with respect to each other: The faster the relative motion, the greater the induced voltage.

www.EngineeringBooksPdf.com

▶ FIGURE 29

Relative motion between a straight conductor and a magnetic field.

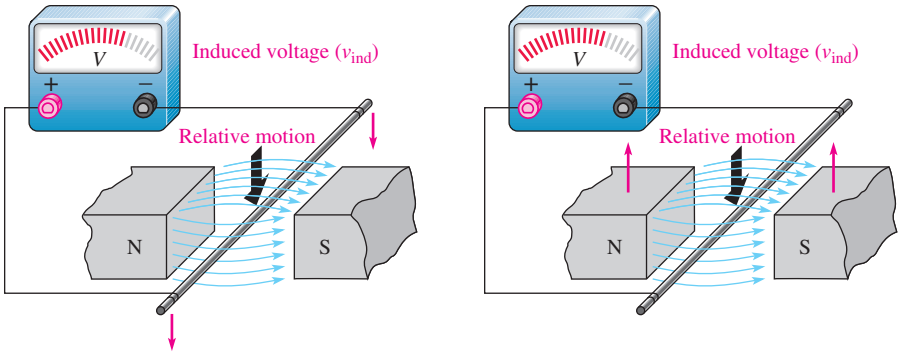

(a) Conductor moving downward (b) Magnetic field moving upward

Polarity of the Induced Voltage

If the conductor in Figure 29 is moved first one way and then another in the magnetic field, a reversal of the polarity of the induced voltage will be observed. When the relative motion of the conductor is downward, a voltage is induced with the polarity indicated in Figure 30(a). When the relative motion of the conductor is upward, the polarity is as indicated in part (b) of the figure.

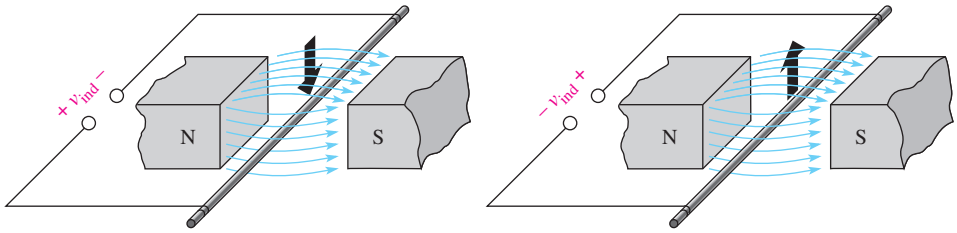

(a) Downward relative motion (b) Upward relative motion

▲ FIGURE 30

Polarity of induced voltage depends on direction of motion of the conductor relative to the magnetic field.

When a straight conductor moves perpendicular to a constant magnetic field, the induced voltage is given by

Equation 7

$$v_{\text{ind}} = B_{\perp} l v$$

where v_{ind} is the induced voltage in volts, $B_{\perp}$ is the component of the magnetic flux density that is perpendicular to the moving conductor (in teslas), l is the length of the conductor that is exposed to the magnetic field, and v is the velocity of the conductor in m/s.

EXAMPLE 7

Assume the conductor in Figure 30 is 10 cm long and the pole face of the magnet is 5.0 cm wide. The flux density is 0.5 T, and the conductor is moved upward at a velocity of 0.8 m/s. What voltage is induced in the conductor?

Solution Although the conductor is 10 cm, only 5.0 cm (0.05 m) is in the magnetic field because of the size of the pole faces. Therefore,

$$v_{\text{ind}} = B_{\perp} l v = (0.5\text{ T})(0.05\text{ m})(0.8\text{ m/s}) = \mathbf{20\ mV}$$

Related Problem What is the induced voltage if the velocity is doubled?

www.EngineeringBooksPdf.com

Induced Current

When a load resistor is connected to the conductor in Figure 30, the voltage induced by the relative motion between the conductor and the magnetic field will cause a current in the load, as shown in Figure 31. This current is called the **induced current (i_{ind})**. The lowercase i stands for instantaneous current.

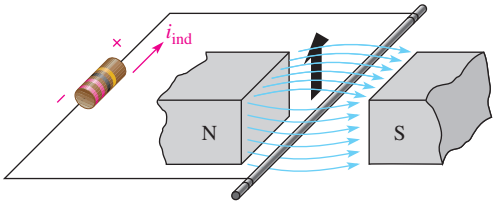

◀ FIGURE 31

Induced current (i_{ind}) in a load as the conductor moves through the magnetic field.

The action of producing a voltage and a current in a load by moving a conductor across a magnetic field is the basis for electrical generators. A single conductor will have a small induced current, so practical generators use coils with many turns. Also, the existence of a conductor in a moving magnetic field is fundamental to the concept of inductance in an electric circuit.

Faraday's Law

Michael Faraday discovered the principle of electromagnetic induction in 1831. The key idea behind Faraday's law is that a changing magnetic field can induce a voltage in a conductor. Sometimes Faraday's law is stated as Faraday's law of induction. Faraday experimented with coils, and his law is an extension of the principle of electromagnetic induction for straight conductors discussed previously.

When a conductor is coiled into multiple turns, more conductors can be exposed to the magnetic field, increasing the induced voltage. When the flux is caused to change by any means, an induced voltage will result. The change in the magnetic field can be caused by relative motion between the magnetic field and the coil. Faraday's observations can be stated as follows:

1. The amount of voltage induced in a coil is directly proportional to the rate of change of the magnetic field with respect to the coil.
2. The amount of voltage induced in a coil is directly proportional to the number of turns of wire in the coil.

Faraday's first observation is demonstrated in Figure 32, where a bar magnet is moved through a coil, thus creating a changing magnetic field. In part (a) of the figure,

HISTORY NOTE

Michael Faraday 1791–1867

Faraday was an English physicist and chemist who is best remembered for his contribution to the understanding of electromagnetism. He discovered that electricity could be produced by moving a magnet inside a coil of wire, and he was able to build the first electric motor. He later built the first electromagnetic generator and transformer. The statement of the principles of electromagnetic induction is known today as Faraday's law. Also, the unit of capacitance, the *farad*, is named after him. (Photo credit: Library of Congress.)

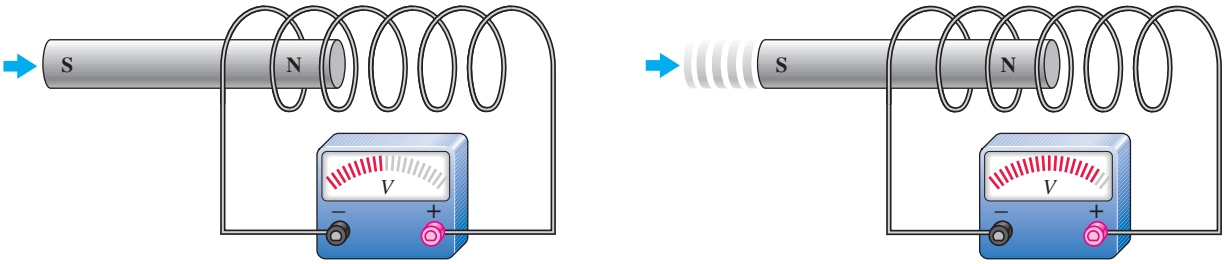

(a) As the magnet moves slowly to the right, its magnetic field is changing with respect to the coil, and a voltage is induced.

(b) As the magnet moves more rapidly to the right, its magnetic field is changing more rapidly with respect to the coil, and a greater voltage is induced.

▲ FIGURE 32

A demonstration of Faraday's first observation: The amount of induced voltage is directly proportional to the rate of change of the magnetic field with respect to the coil.

www.EngineeringBooksPdf.com

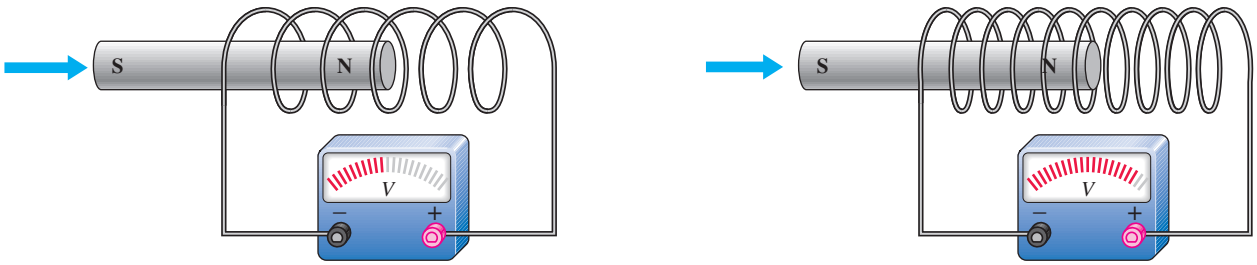

(a) Magnet moves through a coil and induces a voltage.

(b) Magnet moves at same rate through a coil with more turns (loops) and induces a greater voltage.

▲ FIGURE 33

A demonstration of Faraday's second observation: The amount of induced voltage is directly proportional to the number of turns in the coil.

the magnet is moved at a certain rate, and a certain induced voltage is produced as indicated. In part (b), the magnet is moved at a faster rate through the coil, creating a greater induced voltage.

Faraday's second observation is demonstrated in Figure 33. In part (a), the magnet is moved through the coil and a voltage is induced as shown. In part (b), the magnet is moved at the same rate through a coil that has a greater number of turns. The greater number of turns creates a greater induced voltage.

Faraday's law is stated as follows:

The voltage induced across a coil equals the number of turns in the coil times the rate of change of the magnetic flux.

Any *relative* motion between the magnetic field and the magnet will produce the changing magnetic field that will induce a voltage in the coil. The changing magnetic field can even be induced by ac applied to an electromagnet, just as if there were motion. This type of changing magnetic field is the basis for transformer action in ac circuits.

HISTORY NOTE

Heinrich F. E. Lenz 1804–1865

Lenz was born in Estonia (then Russia) and became a professor at the University of St. Petersburg. He carried out many experiments following Faraday's lead and formulated the principle of electromagnetism, which defines the polarity of induced voltage in a coil. The statement of this principle is named in his honor. (Photo credit: AIP Emilio Segré Visual Archives, E. Scott Barr Collection.)

Lenz's Law

You have learned that a changing magnetic field induces a voltage in a coil that is directly proportional to the rate of change of the magnetic field and the number of turns in the coil. **Lenz's law** defines the polarity or direction of the induced voltage.

When the current through a coil changes, the polarity of the induced voltage created by the changing magnetic field is such that it always opposes the change in current that caused it.

An Application of Electromagnetic Induction

In automobiles, it is necessary to know the position of the crankshaft to control ignition timing and sometimes to adjust the fuel mixture. As mentioned previously, a Hall-effect sensor is one method to determine the position of the crankshaft (or camshaft). Another widely used method is to detect a change in the magnetic field as a metallic tab moves though the air gap in a magnetic assembly. A basic concept is shown in Figure 34. A steel disk with protruding tabs is connected to the end of the crankshaft. As the crankshaft turns, the tabs move through the magnetic field. Steel has a much lower reluctance than does air, so the magnetic flux increases when a tab is in the air gap. This change in the magnetic flux causes an induced voltage to appear across the coil, indicating the position of the crankshaft.

www.EngineeringBooksPdf.com

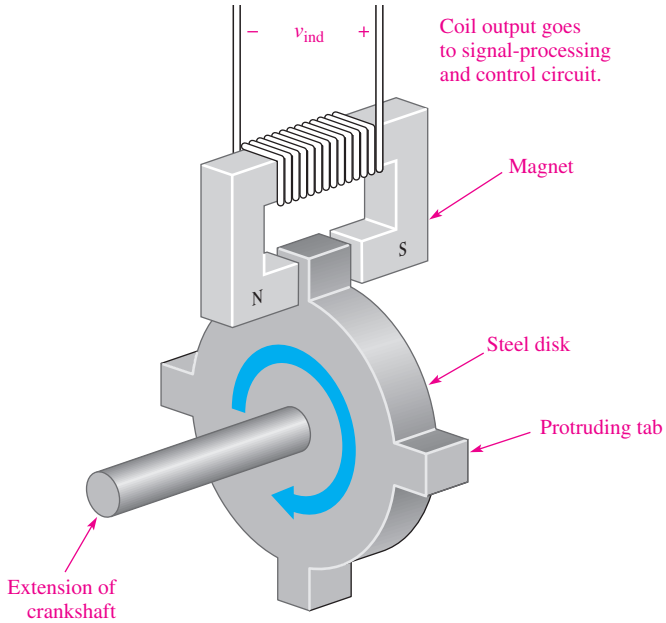

◀ FIGURE 34

A crankshaft position sensor that produces a voltage when a tab passes through the air gap of the magnet.

Forces on a Current-Carrying Conductor in a Magnetic Field (Motor Action)

Figure 35(a) shows current inward through a wire in a magnetic field. The electromagnetic field set up by the current interacts with the permanent magnetic field; as a result, the permanent lines of force above the wire tend to be deflected down under the wire because they are opposite in direction to the electromagnetic lines of force. Therefore, the flux density above is reduced, and the magnetic field is weakened. The flux density below the conductor is increased, and the magnetic field is strengthened. An upward force on the conductor results, and the conductor tends to move toward the weaker magnetic field. Figure 35(b) shows the current outward, resulting in a force on the conductor in the downward direction. These upward and downward forces on a conductor are the basis for electric motors.

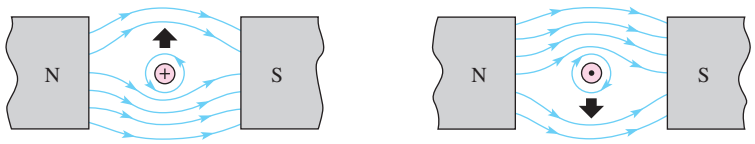

(a) Upward force: weak field above, strong field below.

(b) Downward force: strong field above, weak field below

⊕ Current in
⊙ Current out

▲ FIGURE 35

Forces on a current-carrying conductor in a magnetic field.

The force on a current-carrying conductor is given by the equation

$$F = BIl$$

Equation 8

where F is the force in newtons, B is the magnetic flux density in teslas, I is the current in amperes, and l is the length of the conductor exposed to the magnetic field in meters.

www.EngineeringBooksPdf.com

EXAMPLE 8

Assume a magnetic pole face is a square that is 3.0 cm on a side. Find the force on a conductor that has a current of 2 A if the conductor is perpendicular to the field and the flux density is 0.35 T.

Solution The length of conductor exposed to the magnetic flux is 3.0 cm (0.030 m). Therefore,

$$F = BIl = (0.35\text{ T})(2.0\text{ A})(0.03\text{ m}) = \mathbf{0.21\text{ N}}$$

Related Problem What is the direction of the force if the field is directed up (along the y axis), and the current (electron flow) is directed inward (along the z axis)?

SECTION 5 CHECKUP

1. What is the induced voltage across a stationary conductor in a stationary magnetic field?
2. When the rate at which a conductor is moved through a magnetic field is increased, does the induced voltage increase, decrease, or remain the same?
3. When there is current through a conductor in a magnetic field, what happens?
4. If the steel disk in the crankshaft position sensor has stopped with a tab in the magnet's air gap, what is the induced voltage?

6 DC GENERATORS

DC generators produce a voltage that is proportional to the magnetic flux and the rotational speed of the armature.

After completing this section, you should be able to

- **Explain how a dc generator works**
  - Draw an equivalent circuit for a self-excited shunt-type dc generator
  - Discuss the parts of a dc generator

Figure 36 shows a greatly simplified dc generator consisting of a single loop of wire that rotates in a magnetic field. Notice that each end of the loop is connected to a split-ring arrangement. This conductive metal ring is called a *commutator.* As the wire loop rotates in the magnetic field, the split commutator ring also rotates. Each half of the split ring rubs against the fixed contacts, called *brushes,* and connects the wire to an external circuit.

Driven by an external mechanical force, the loop of wire rotates through the magnetic field and cuts through the flux lines at varying angles, as illustrated in Figure 37. At position A in its rotation, the loop is effectively moving parallel with the magnetic field. Therefore, at this instant, the rate at which it is cutting through the magnetic flux lines is zero. As the loop moves from position A to position B, it cuts through the flux lines at an increasing rate. At position B, it is moving effectively perpendicular to the magnetic field and thus is cutting through a maximum number of lines. As the loop rotates from position B to position C, the rate at which it cuts the flux lines decreases to minimum (zero) at C. From position C to position D, the rate at which the loop cuts the flux lines increases to a maximum at D and then back to a minimum again at A.

As you have learned, when a wire moves through a magnetic field, a voltage is induced, and by Faraday's law, the amount of induced voltage is proportional to the number of loops

www.EngineeringBooksPdf.com

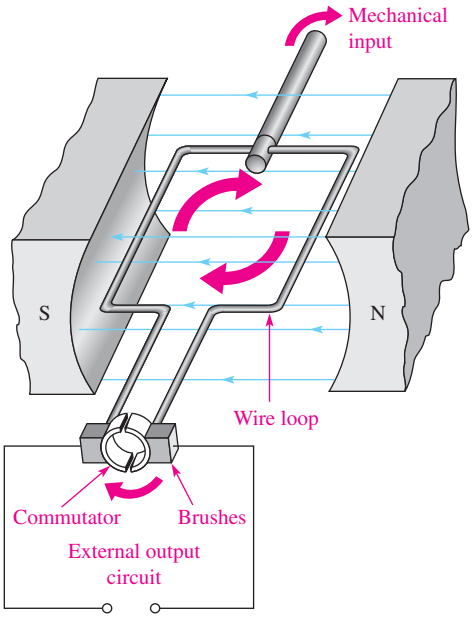

▲ FIGURE 36

A simplified dc generator.

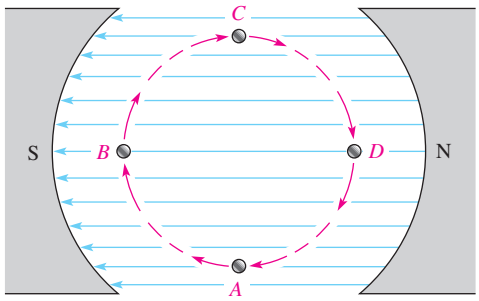

▲ FIGURE 37

End view of loop of wire cutting through the magnetic field.

(turns) in the wire and the rate at which it is moving with respect to the magnetic field. The angle at which the wire moves with respect to the magnetic flux lines determines the amount of induced voltage because the rate at which the wire cuts through the flux lines depends on the angle of motion.

Figure 38 illustrates how a voltage is induced in the external circuit as a single loop of wire rotates in the magnetic field. Assume that the loop is in its instantaneous horizontal position, so the induced voltage is zero. As the loop continues in its rotation, the induced voltage builds up to a maximum at position *B*, as shown in part (a) of the figure. Then, as the loop continues from *B* to *C*, the voltage decreases to zero at *C*, as shown in part (b).

During the second half of the revolution, shown in Figure 38(c) and (d), the brushes switch to opposite commutator sections, so the polarity of the voltage remains the same across the output. Thus, as the loop rotates from position *C* to *D* and then back to *A*, the voltage increases from zero at *C* to a maximum at *D* and back to zero at *A*.

Figure 39 shows how the induced voltage varies as a wire loop in a dc generator goes through several rotations (three in this case). This voltage is a dc voltage because its polarity does not change. However, the voltage is pulsating between zero and its maximum value.

In practical generators, multiple coils are pressed into slots in a ferromagnetic-core assembly. The entire assembly, called the **rotor**, is connected to bearings and rotates in the magnetic field. Figure 40 is a diagram of the rotor core with no wire loops (coils) shown. The commutator is divided into segments, with each pair of segments connected to the end of a coil. With more coils, the voltages from several coils are combined because the brushes can contact more than one of the commutator segments at once. The loops do not reach maximum voltage at the same time, so the pulsating output voltage is much smoother than is the case with only one coil or loop shown previously. The variations can be further smoothed by filters to produce a nearly constant dc output.

Instead of permanent magnets, most generators use electromagnets to provide the required magnetic field. One advantage to this is that flux density can be controlled, thus controlling the output voltage of the generator. The windings for the electromagnets are appropriately called the field windings. The field windings require current to produce the magnetic field.

www.EngineeringBooksPdf.com

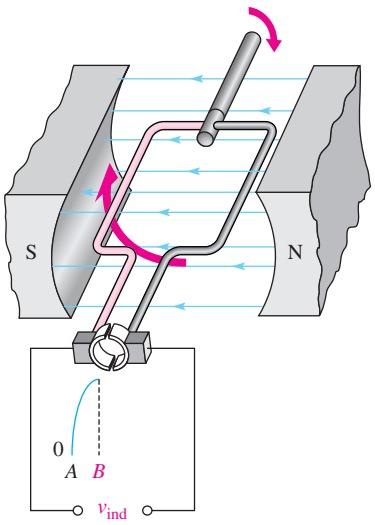

Position *B*: Loop is moving perpendicular to flux lines, and voltage is maximum.

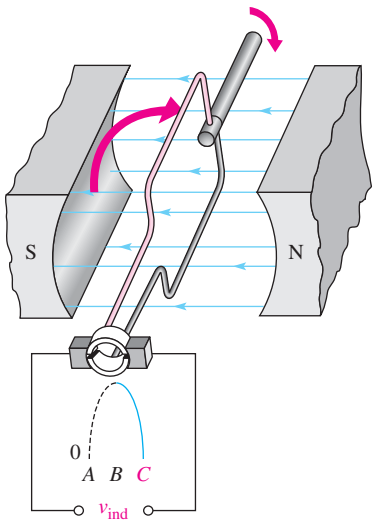

Position *C*: Loop is moving parallel with flux lines, and voltage is zero.

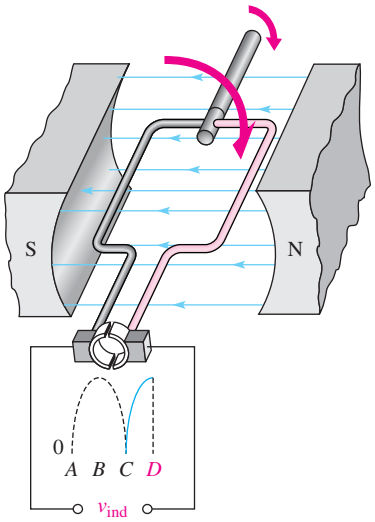

Position *D*: Loop is moving perpendicular to flux lines, and voltage is maximum.

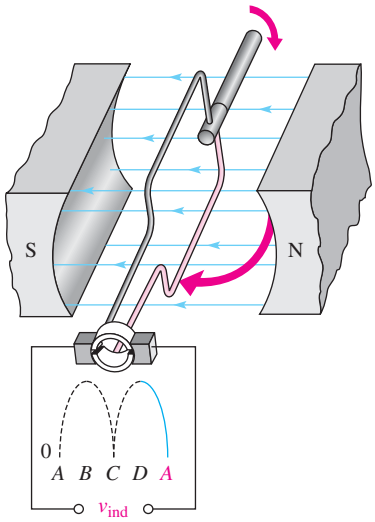

Position *A*: Loop is moving parallel with flux lines, and voltage is zero.

▲ **FIGURE 38**

Basic operation of a dc generator.

▶ **FIGURE 39**

Induced voltage over three rotations of a wire loop in a dc generator.

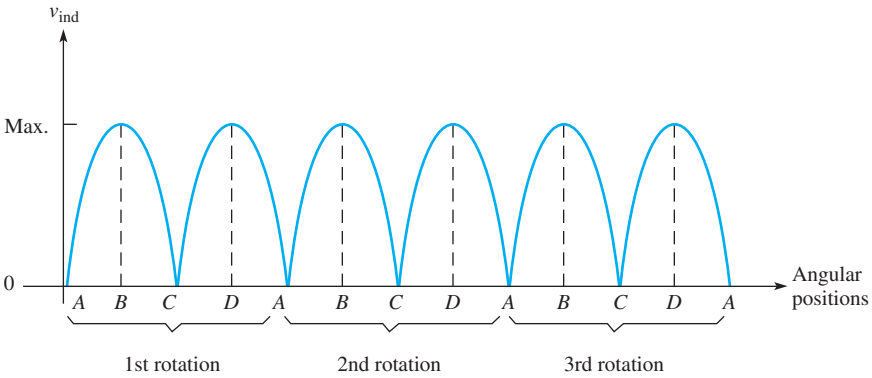

www.EngineeringBooksPdf.com

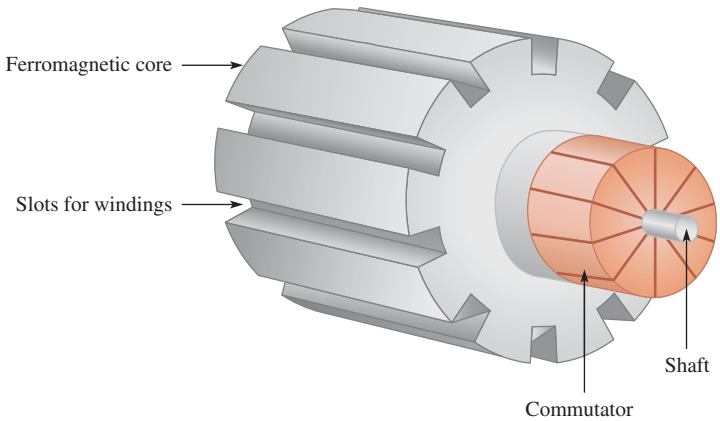

◀ FIGURE 40

A simplified rotor core. The coils are pressed into the slots and connected to the commutator.

The current for the field windings can be provided from a separate voltage source, but this is a disadvantage. A better method is to use the generator itself to provide the current for the electromagnets; this is called a **self-excited generator**. The generator starts because there is normally enough residual magnetism in the field magnets due to hysteresis that causes a small initial field and allows the generator to start producing a voltage. In cases where a generator has not been used for a long time, it may be necessary to provide an external source to the field windings to start it.

The stationary part of a generator (or a motor) includes all of the nonmoving parts and is called the **stator**. Figure 41 illustrates a simplified two-pole dc generator showing the magnetic paths (end caps, bearings, and commutator are not shown). Notice that the frame is part of the magnetic path for the field magnets. To make a generator have high efficiency, the air gap is kept as small as possible. The **armature** is the power-producing component and can be either on the rotor or the stator. In the dc generator described previously, the armature is the rotor because power is produced in the moving conductors and taken from the rotor via the commutator.

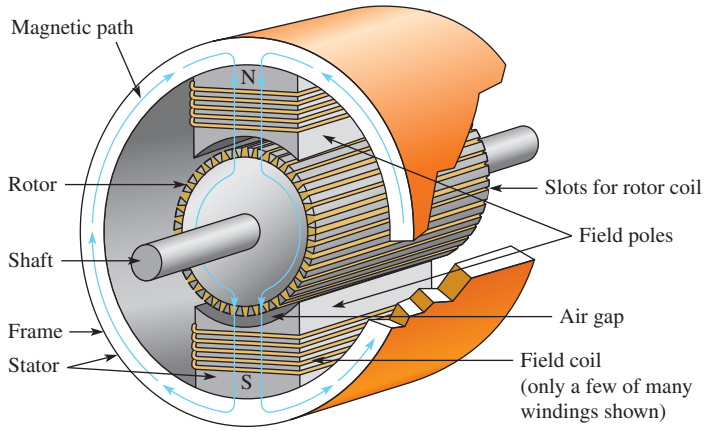

◀ FIGURE 41

The magnetic structure of a generator (or motor). In this case, the rotor is also the armature because it produces the power.

Equivalent Circuit for a DC Generator

A self-excited generator can be represented by a basic dc circuit with a coil to produce the magnetic field and a mechanically driven generator, as shown in Figure 42. There are other configurations of dc generators, but this represents a common one. In the case shown, the field windings are in parallel with the source; this configuration is called a *shunt-wound generator*. The resistance of the field windings is shown as R_F. For the equivalent circuit, this resistance is shown in series with the field windings. The armature is driven by a mechanical input, causing it to spin; the armature is the generator voltage source, V_G. The armature

www.EngineeringBooksPdf.com

▶ FIGURE 42

Equivalent circuit for a self-excited shunt dc generator.

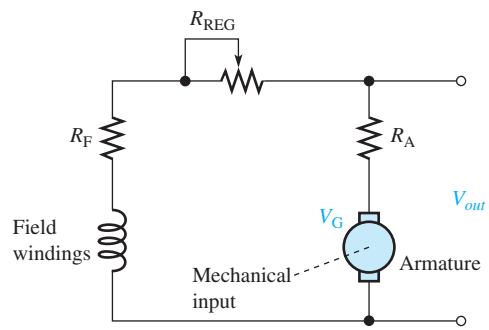

resistance is shown as the series resistance, R_A. The rheostat, R_{REG}, is in series with the field winding resistance and regulates the output voltage by controlling the current to the field windings and thus the flux density.

When a load is connected to the output, current in the armature is shared between the load and the field windings. The efficiency of the generator can be calculated as the ratio of the power delivered to the load (P_L) to the total power (P_T), which includes the losses in the armature and the resistance in the field circuit.

SECTION 6 CHECKUP

1. What is the moving part of a generator called?
2. What is the purpose of a commutator?
3. How does greater resistance in the field windings of a generator affect the output voltage?
4. What is meant by a self-excited generator?

7 DC MOTORS

Motors convert electrical energy to mechanical motion by taking advantage of the force produced when a current-carrying conductor is in a magnetic field. A dc motor operates from a dc source and can use either an electromagnet or a permanent magnet to supply the field.

After completing this section, you should be able to

- **Explain how a dc motor works**
  - Draw an equivalent circuit for a series and a shunt-type dc motor
  - Discuss back emf and how it reduces armature current
  - Discuss power rating of motors

Basic Operation

As in the case of generators, motor action is the result of the interaction of magnetic fields. In a dc motor, the rotor field interacts with the magnetic field set up by current in the stator windings. The rotor in all dc motors contains the armature winding, which sets up a magnetic field. The rotor moves because of the attractive force between opposite poles and the repulsive force between like poles, as illustrated in the simplified diagram of Figure 43. The rotor moves because of the attraction of its north pole with the south pole of the stator (and vice-versa). As the two poles near each other, the polarity of the rotor current is suddenly switched

www.EngineeringBooksPdf.com

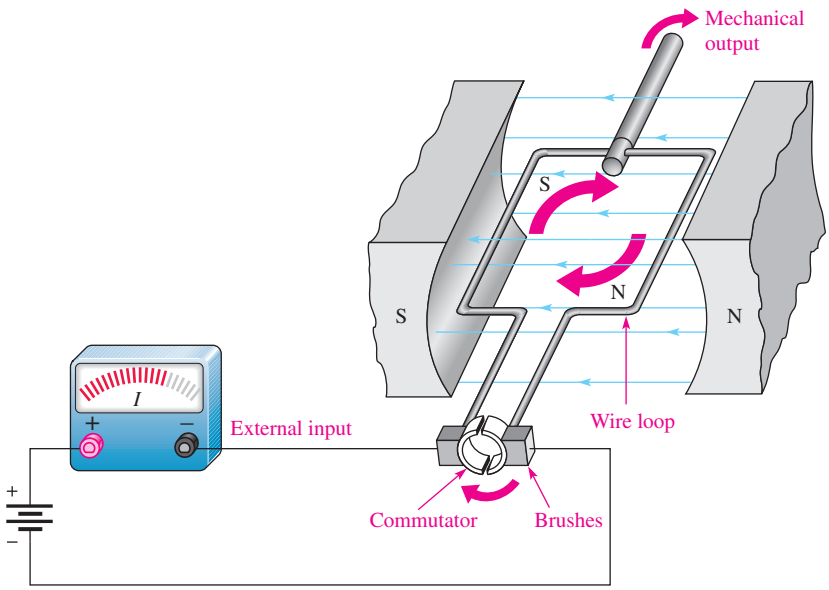

◀ **FIGURE 43**

Simplified dc motor.

by the commutator, reversing the magnetic poles of the rotor. The commutator serves as a mechanical switch to reverse the current in the armature just as the unlike poles are near each other, continuing the rotation of the rotor.

Brushless DC Motors

Many dc motors do not use a commutator to reverse the polarity of the current. Instead of supplying current to a moving armature, the magnetic field is rotated in the stator windings using an electronic controller. The direction of current in the field coils is periodically reversed by the controller by producing an ac waveform (or modified ac waveform) from the dc input. This causes the stator field to rotate, and the permanent magnet rotor moves in the same direction to keep up with the rotating field. A common way to sense the position of the rotating magnet is to use a Hall-effect sensor, which provides the controller with position information by sending pulses every time a magnet passes it. Brushless motors have higher reliability than traditional brushed motors because they do not need to have periodic brush replacement, but have the added complexity of the electronic controller. Figure 44

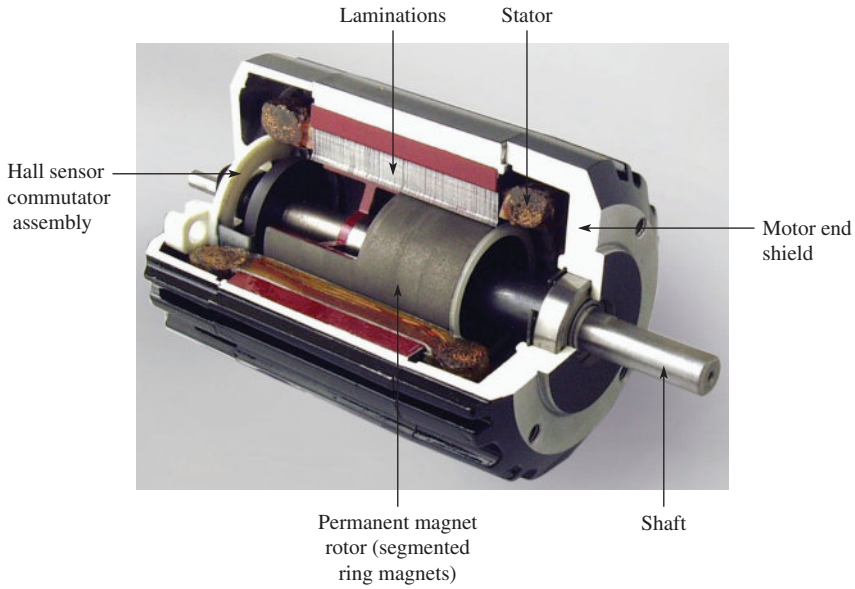

◀ **FIGURE 44**

Cutaway view of a brushless dc motor. (Courtesy of Bodine Electric Company)

www.EngineeringBooksPdf.com

shows a cutaway view of a brushless dc motor that includes a pulse width modulation control within the motor housing as well as an optical encoder to indicate the shaft position.

HANDS ON TIP

One characteristic of dc motors is that if they are allowed to run without a load, the torque can cause the motor to "run away" to a speed beyond the manufacturer's rating. Therefore, dc motors should always be operated with a load to prevent self-destruction.

Back EMF

When a dc motor is first started, a magnetic field is present from the field windings. Armature current develops another magnetic field that interacts with the one from the field windings and starts the motor turning. The armature windings are now spinning in the presence of the magnetic field, so generator action occurs. In effect, the spinning armature has a voltage developed across it that opposes the original applied voltage in accordance with Lenz's law. This self-generated voltage is called **back emf** (electromotive force). The term *emf* was once common for voltage but is not favored because voltage is not a "force" in the physics sense, but back emf is still applied to the self-generated voltage in motors. Back emf, also called *counter emf,* serves to significantly reduce the armature current when the motor is turning at constant speed.

Motor Ratings

Some motors are rated by the torque they can provide; others are rated by the power they produce. Torque and power are important parameters for any motor. Although torque and power are different physical parameters, if one is known, the other can be obtained.

Torque tends to rotate an object. In a dc motor, the torque is proportional to the amount of flux and to the armature current. Torque, T, in a dc motor can be calculated from the equation

Equation 9

$$T = K\phi I_A$$

where T is torque in newton-meters (N-m) K is a constant that depends on physical parameters of the motor, ϕ is magnetic flux in webers (Wb), and I_A is armature current in amperes (A).

Recall that power is defined as the rate of doing work. To calculate power from torque, you must know the speed of the motor in rpm for the torque that you measured. The equation to determine the power, given the torque at a certain speed, is

Equation 10

$$P = 0.105Ts$$

where P is power in W, T is torque in N-m, and s is speed of motor in rpm.

EXAMPLE 9

What is the power developed by a motor that turns at 350 rpm when the torque is 3.6 N-m?

Solution Substitute into Equation 10.

$$P = 0.105Ts = 0.105(3.6\text{ N-m})(350\text{ rpm}) = \mathbf{132\ W}$$

Related Problem There are 746 W in one hp. What is the hp of this motor under these conditions?

Series DC Motors

The series dc motor has the field coil windings and the armature coil windings in series. A schematic of this arrangement is shown in Figure 45(a). The internal resistance is generally small and consists of field coil resistance, armature winding resistance, and brush resistance. As in the case of generators, dc motors may also contain an interpole winding, as shown, and current limiting for speed control. In a series dc motor, the armature current, field current, and line current are all the same.

As you know, magnetic flux is proportional to the current in a coil. The magnetic flux created by the field windings is proportional to armature current because of the series connection. Thus, when the motor is loaded, armature current rises, and the magnetic flux rises too. Recall that Equation 9 showed that the torque in a dc motor is proportional to both the armature current and the magnetic flux. Thus, the series-wound motor will have a

www.EngineeringBooksPdf.com

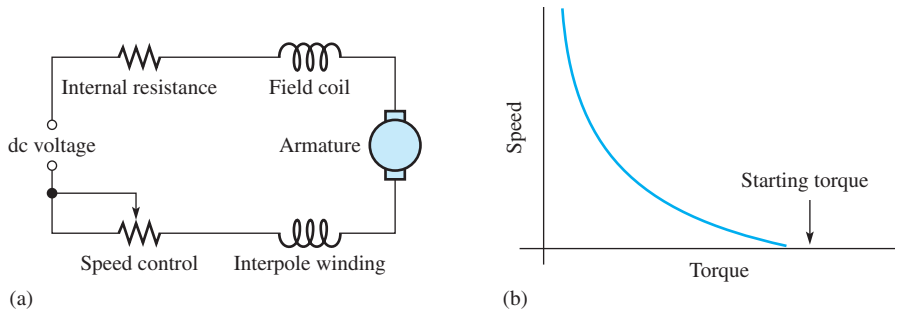

FIGURE 45

Simplified schematic for a series dc motor and torque-speed characteristic.

very high starting torque when the current is high because flux and armature current are high. For this reason, series dc motors are used when high starting torques are required (such as a starter motor in a car).

The plot of the torque and motor speed for a series dc motor is shown in Figure 45(b). The starting torque is at its maximum value. At low speeds, the torque is still very high, but drops off dramatically as the speed increases. As you can see, the speed can be very high if the torque is low; for this reason, the series-wound dc motor always is operated with a load.

Shunt DC Motors

A shunt dc motor has the field coil in parallel with the armature, as shown in the equivalent circuit in Figure 46(a). In the shunt motor, the field coil is supplied by a constant voltage source, so the magnetic field set up by the field coils is constant. The armature resistance and the back emf produced by generator action in the armature determine the armature current.

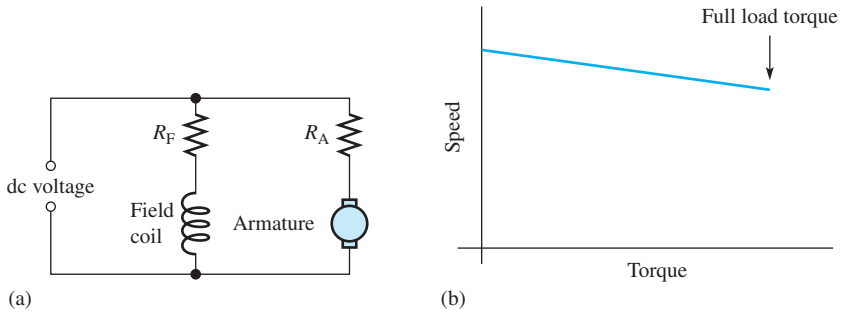

FIGURE 46

Simplified schematic for a shunt dc motor and torque-speed characteristic.

The torque-speed characteristic for a shunt dc motor is quite different than for a series dc motor. When a load is applied, the shunt motor will slow down, causing the back emf to be reduced and the armature current to increase. The increase in armature current tends to compensate for the added load by increasing the torque of the motor. Although the motor has slowed because of the additional load, the torque-speed characteristic is nearly a straight line for the shunt dc motor as shown in Figure 46(b). At full load, the shunt dc motor still has high torque.

SECTION 7 CHECKUP

1. What creates back emf?
2. How does back emf affect current in a rotating armature as it comes up to speed?
3. What type of dc motor has the highest starting torque?
4. What is the major advantage of a brushless motor over a brushed motor?

www.EngineeringBooksPdf.com

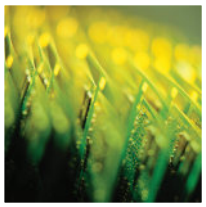

Application Assignment

PUTTING YOUR KNOWLEDGE TO WORK

The relay is a common type of electromagnetic device that is used in many types of control applications. With a relay, a lower voltage, such as from a battery, can be used to switch a much higher voltage, such as the 120 V from an ac outlet. In this application, you will see how a relay can be used in a basic security alarm system.

The schematic in Figure 47 shows a simplified intrusion alarm system that uses a relay to turn on an audible alarm (siren) and lights. The system operates from a 9 V battery so that even if power to the house is off, the audible alarm will still work.

The magnetic detection switches are normally open (NO) switches that are parallel connected and located in the windows and doors. The relay is a triple-pole–double-throw device that operates with a coil voltage of 9 V dc and draws approximately 50 mA. When an intrusion occurs, one of the switches closes and allows current from the battery through the relay coil, which energizes the relay and causes the three sets of normally open contacts to close. Closure of contact *A* turns on the audible alarm, which draws 2 A from the battery. Closure of contact *C* turns on a light circuit in the house. Closure of contact *B* latches the relay and keeps it energized even if an intruder closes the door or window through which entry was made. If not for contact *B* in parallel with the detection switches, the alarm and lights would go off as soon as the window or door was shut behind the intruder.

The relay contacts are not physically remote in relation to the coil as the schematic indicates. The schematic is drawn this way for functional clarity. The entire triple-pole–double-throw relay is housed in the package shown in Figure 48. Also shown are the pin diagram and internal schematic for the relay.

▶ **FIGURE 47**

Simplified security alarm system.

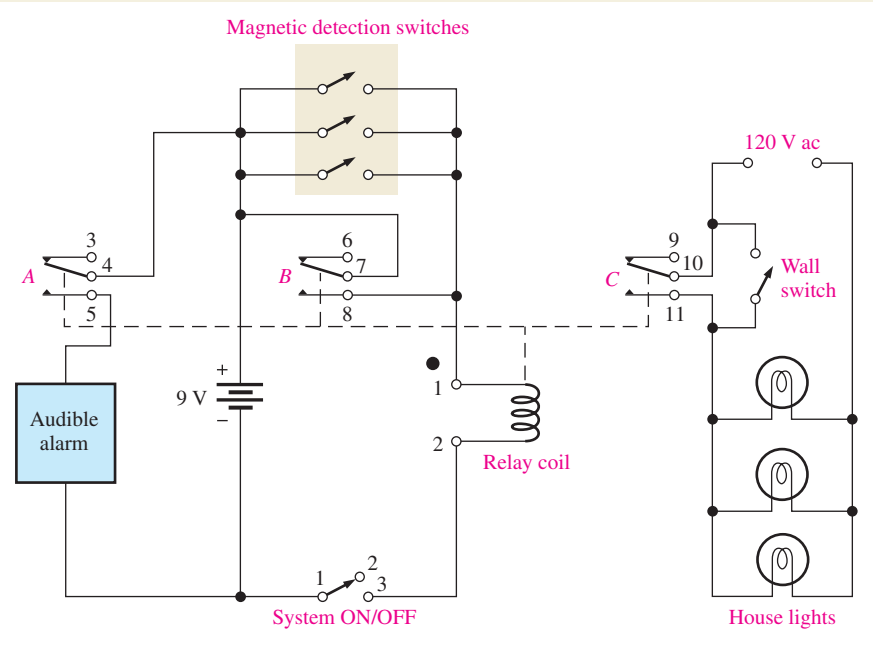

▶ **FIGURE 48**

Triple-pole–double-throw relay.

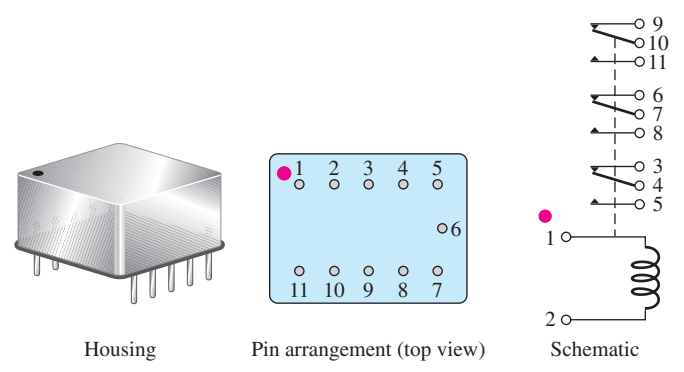

www.EngineeringBooksPdf.com

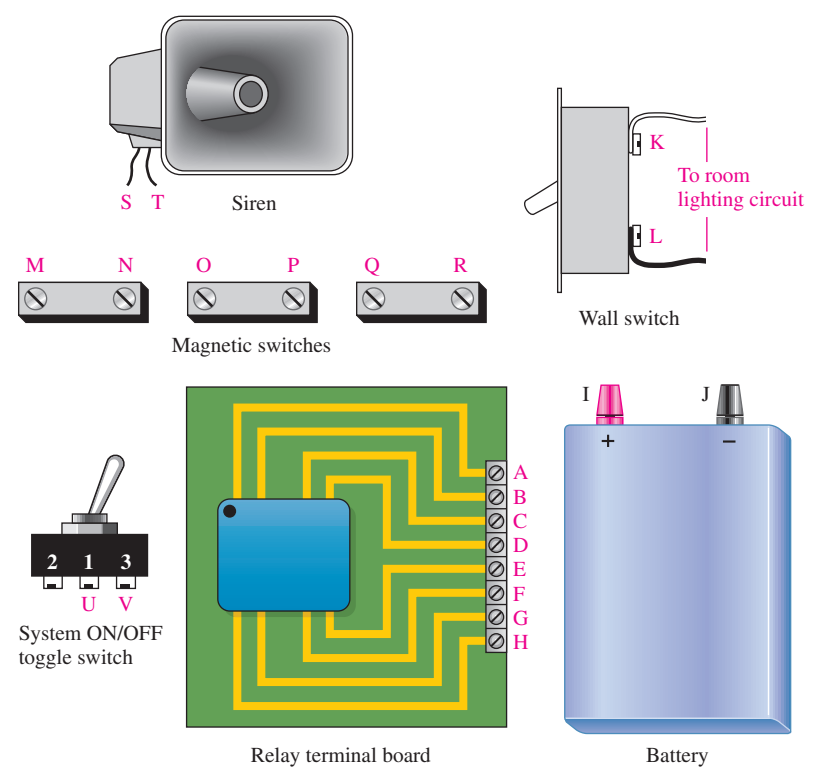

FIGURE 49

Array of security alarm components.

Step 1: Connecting the System

Develop a connection diagram and point-to-point wire list for interconnecting the components in Figure 49 to create the alarm system shown in the schematic of Figure 47. The connection points on the components are indicated by letters.

Step 2: Testing the System

Develop a step-by-step procedure to check out the completely wired burglar alarm system.

Review

1. How many magnetic detection switches in Figure 47 must be closed to activate the system?
2. What is the purpose of each of the three relay contacts?

SUMMARY

- Unlike magnetic poles attract each other, and like poles repel each other.
- Materials that can be magnetized are called *ferromagnetic*.
- When there is current through a conductor, it produces an electromagnetic field around the conductor.
- You can use the left-hand rule to establish the direction of the electromagnetic lines of force around a conductor.
- An electromagnet is basically a coil of wire around a magnetic core.
- When a conductor moves within a magnetic field, or when a magnetic field moves relative to a conductor, a voltage is induced across the conductor.
- The faster the relative motion between a conductor and a magnetic field, the greater is the induced voltage.

www.EngineeringBooksPdf.com

▶ TABLE 3

SYMBOL	QUANTITY	SI UNIT
B	Magnetic flux density	Tesla (T)
ϕ	Flux	Weber (Wb)
μ	Permeability	Webers/ampere-turn · meter (Wb/At · m)
$\mathcal{R}$	Reluctance	Ampere-turns/weber (At/Wb)
F_m	Magnetomotive force (mmf)	Ampere-turn (At)
H	Magnetic field intensity	Ampere-turns/meter (At/m)
F	Force	Newton (N)
T	Torque	Newton-meter (N-m)

- Table 3 summarizes the quantities and SI units used in this chapter.
- Hall-effect sensors use current to sense the presence of a magnetic field.
- DC generators convert mechanical power to dc electrical power.
- The moving part of a generator or motor is called the rotor; the stationary part is called the stator.
- DC motors convert electrical power to mechanical power.
- Brushless dc motors use a permanent magnet as the rotor, and the stator is the armature.

KEY TERMS

Ampere-turn (At) The SI unit of magnetomotive force (mmf).

Electromagnetic field A formation of a group of magnetic lines of force surrounding a conductor created by electrical current in the conductor.

Electromagnetic induction The phenomenon or process by which a voltage is produced in a conductor when there is relative motion between the conductor and a magnetic or electromagnetic field.

Electromagnetism The production of a magnetic field by current in a conductor.

Faraday's law A law stating that the voltage induced across a coil equals the number of turns in the coil times the rate of change of the magnetic flux.

Gauss A CGS unit of flux density.

Hall effect A change in current density across a conductor or semiconductor when current in the material is perpendicular to a magnetic field. The change in current density produces a small transverse voltage in the material, called the *Hall voltage.*

Hysteresis A characteristic of a magnetic material whereby a change in magnetization lags the application of the magnetic field intensity.

Induced current (i_{ind}) A current induced in a conductor as a result of a changing magnetic field.

Induced voltage (v_{ind}) Voltage produced as a result of a changing magnetic field.

Lenz's law A physical law that states when the current through a coil changes, the polarity of the induced voltage created by the changing magnetic field is such that it always opposes the change in current that caused it. The current cannot change instantaneously.

Lines of force Magnetic flux lines in a magnetic field radiating from the north pole to the south pole.

Magnetic field A force field radiating from the north pole to the south pole of a magnet.

Magnetic flux The lines of force between the north and south poles of a permanent magnet or an electromagnet.

Magnetic field intensity The amount of mmf per unit length of magnetic material.

Magnetomotive force (mmf) The cause of a magnetic field, measured in ampere-turns.

Permeability The measure of ease with which a magnetic field can be established in a material.

Relay An electromagnetically controlled mechanical device in which electrical contacts are opened or closed by a magnetizing current.

Reluctance ($\mathcal{R}$) The opposition to the establishment of a magnetic field in a material.

www.EngineeringBooksPdf.com

Retentivity The ability of a material, once magnetized, to maintain a magnetized state without the presence of a magnetizing force.

Solenoid An electromagnetically controlled device in which the mechanical movement of a shaft or plunger is activated by a magnetizing current.

Speaker An electromagnetic device that converts electrical signals to sound waves.

Tesla (T) The SI unit of flux density.

Weber (Wb) The SI unit of magnetic flux, which represents 10^8 lines.

FORMULAS

1	$B = \dfrac{\phi}{A}$	Magnetic flux density
2	$\mu_r = \dfrac{\mu}{\mu_0}$	Relative permeability
3	$\mathcal{R} = \dfrac{l}{\mu A}$	Reluctance
4	$F_m = NI$	Magnetomotive force
5	$\phi = \dfrac{F_m}{\mathcal{R}}$	Magnetic flux
6	$H = \dfrac{F_m}{l}$	Magnetic field intensity
7	$v_{\text{ind}} = Blv$	Induced voltage
8	$F = BIl$	Force on current-carrying conductor
9	$T = k\phi I_A$	Torque in a dc motor
10	$P = 0.105Ts$	Power from torque

TRUE/FALSE QUIZ

Answers are at the end of the chapter.

1. The tesla (T) and the gauss (G) are both units for magnetic flux density.
2. The unit for measuring magnetomotive force (mmf) is the volt.
3. Ohm's law for a magnetic circuit gives the relationship between flux density, magnetomotive force, and reluctance.
4. A solenoid is a form of electromagnetic switch that opens and closes mechanical contacts.
5. A hysteresis curve is a plot of flux density (B) as a function of field intensity (H).
6. To produce an induced voltage in a coil, the magnetic field surrounding it can be changed.
7. The speed of a generator can be controlled with a rheostat in the field windings.
8. A self-excited dc generator will normally have enough residual magnetism in the field magnets to start the generator, producing voltage at the output when it is first turned on.
9. The power developed by a motor is proportional to its torque.
10. In a brushless motor, the magnetic field is supplied by permanent magnets.

SELF-TEST

Answers are at the end of the chapter.

1. When the south poles of two bar magnets are brought close together, there will be
   (a) a force of attraction **(b)** a force of repulsion
   (c) an upward force **(d)** no force
2. A magnetic field is made up of
   (a) positive and negative charges **(b)** magnetic domains
   (c) flux lines **(d)** magnetic poles

www.EngineeringBooksPdf.com

3. The direction of a magnetic field is from
   (a) north pole to south pole **(b)** south pole to north pole
   (c) inside to outside the magnet **(d)** front to back
4. Reluctance in a magnetic circuit is analogous to
   (a) voltage in an electric circuit **(b)** current in an electric circuit
   (c) power in an electric circuit **(d)** resistance in an electric circuit
5. The unit of magnetic flux is the
   (a) tesla **(b)** weber **(c)** gauss **(d)** ampere-turn
6. The unit of magnetomotive force is the
   (a) tesla **(b)** weber **(c)** ampere-turn **(d)** electron-volt
7. A unit of magnetic flux density is the
   (a) tesla **(b)** weber **(c)** ampere-turn **(d)** ampere-turns/meter
8. The electromagnetic activation of a movable shaft is the basis for
   (a) relays **(b)** circuit breakers
   (c) magnetic switches **(d)** solenoids
9. When there is current through a wire placed in a magnetic field,
   (a) the wire will overheat **(b)** the wire will become magnetized
   (c) a force is exerted on the wire **(d)** the magnetic field will be cancelled
10. A coil of wire is placed in a changing magnetic field. If the number of turns in the coil is increased, the voltage induced across the coil will
    (a) remain unchanged **(b)** decrease
    (c) increase **(d)** be excessive
11. If a conductor is moved back and forth at a constant rate in a constant magnetic field, the voltage induced in the conductor will
    (a) remain constant **(b)** reverse polarity
    (c) be reduced **(d)** be increased
12. In the crankshaft position sensor in Figure 34, the induced voltage across the coils is caused by
    (a) current in the coil **(b)** rotation of the disk
    (c) a tab passing through the magnetic field **(d)** acceleration of the disk's rotational speed
13. The purpose of the commutator in a generator or motor is to
    (a) change the direction of the current to the rotor as it spins
    (b) change the direction of the current to the stator windings
    (c) support the motor or generator shaft
    (d) provide the magnetic field for the motor or generator
14. In a motor, back emf serves to
    (a) increase the power from the motor **(b)** decrease the flux
    (c) increase the current in the field windings **(d)** decrease the current in the armature
15. The torque of a motor is proportional to the
    (a) amount of flux **(b)** armature current
    (c) both of the above **(d)** none of the above

PROBLEMS

Answers to odd-numbered problems are at the end of the chapter.

BASIC PROBLEMS

SECTION 1 The Magnetic Field

1. The cross-sectional area of a magnetic field is increased, but the flux remains the same. Does the flux density increase or decrease?

www.EngineeringBooksPdf.com

2. In a certain magnetic field the cross-sectional area is 0.5 m^2 and the flux is 1500 μWb. What is the flux density?
3. What is the flux in a magnetic material when the flux density is 2500×10^{-6} T and the cross-sectional area is 150 cm^2?
4. At a given location, the earth's magnetic field is 0.6 G (gauss). Express this flux density in tesla.
5. A very strong permanent magnet has a field of 100,000 μT. Express this flux density in gauss.

SECTION 2 Electromagnetism

6. What happens to the compass needle in Figure 11 when the current through the conductor is reversed?
7. What is the relative permeability of a ferromagnetic material whose absolute permeability is 750×10^{-6} Wb/At · m?
8. Determine the reluctance of a material with a length of 0.28 m and a cross-sectional area of 0.08 m^2 if the absolute permeability is 150×10^{-7} Wb/At · m.
9. What is the magnetomotive force in a 500 turn coil of wire with 3 A through it?

SECTION 3 Electromagnetic Devices

10. Typically, when a solenoid is activated, is the plunger extended or retracted?
11. **(a)** What force moves the plunger when a solenoid is activated?
    (b) What force causes the plunger to return to its at-rest position?
12. Explain the sequence of events in the circuit of Figure 50 starting when switch 1 (SW1) is closed.

▶ FIGURE 50

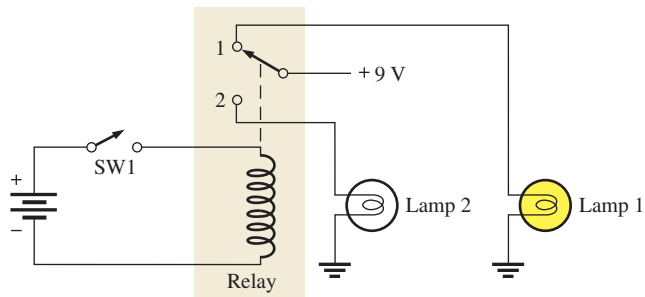

13. What causes the pointer in a d'Arsonval meter movement to deflect when there is current through the coil?

SECTION 4 Magnetic Hysteresis

14. What is the magnetizing force in Problem 9 if the length of the core is 0.2 m?
15. How can the flux density in Figure 51 be changed without altering the physical characteristics of the core?

▶ FIGURE 51

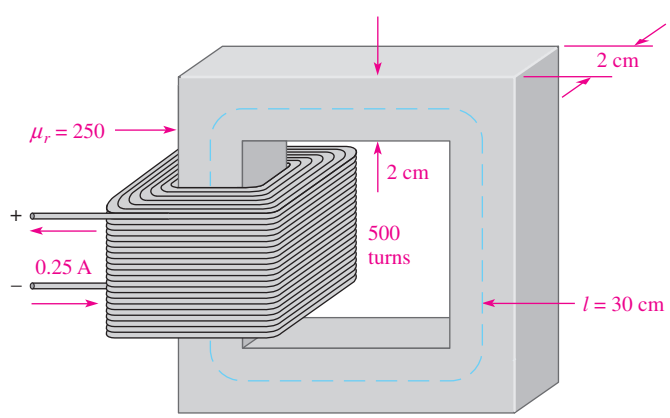

www.EngineeringBooksPdf.com

16. In Figure 51, determine the following if the winding has 100 turns:

(a) H **(b)** ϕ **(c)** B

17. Determine from the hysteresis curves in Figure 52 which material has the most retentivity.

▶ FIGURE 52

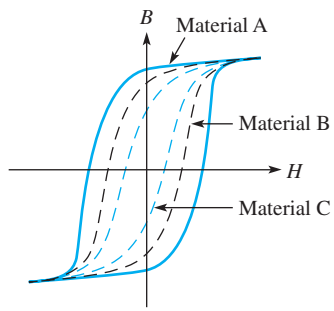

SECTION 5 Electromagnetic Induction

18. According to Faraday's law, what happens to the induced voltage across a given coil if the rate of change of magnetic flux doubles?

19. The voltage induced across a certain coil is 100 mV. A 100 Ω resistor is connected to the coil terminals. What is the induced current?

20. In Figure 34, why is there no induced voltage when the steel disk is not rotating?

21. A 20 cm long conductor is moving upward between the poles of a magnet as shown in Figure 53. The pole faces are 8.5 cm on each side and the flux is 1.24 mWb. The motion produces an induced voltage across the conductor of 44 mV. What is the speed of the conductor?

▶ FIGURE 53

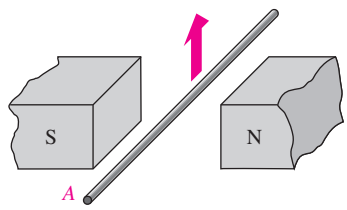

22. **(a)** For the conductor shown in Figure 53, what is the polarity of the end marked with the letter A?

(b) Assuming a complete path is provided and current is in the direction you indicated, what direction is the induced force on the conductor?

SECTION 6 DC Generators

23. If a generator is 80% efficient and delivers 45 W to a load, what is the input power?

24. Assume the self-excited shunt dc generator in Figure 42 has a load connected to it that draws 12 A. If the field windings draw 1.0 A, what is the armature current?

25. **(a)** If the output voltage in Problem 24 is 14 V, what power is supplied to the load?

(b) What power is dissipated in the field resistance?

SECTION 7 DC Motors

26. **(a)** What power is developed by a motor that turns at 1200 rpm and has a torque of 3.0 N-m?

(b) What is the horsepower rating of the motor? (746 W = 1 hp)

27. Assume a motor dissipates 12 W internally when it delivers 50 W to a load. What is the efficiency?

ADVANCED PROBLEMS

28. A basic one-loop dc generator is rotated at 60 rps. How many times each second does the dc output voltage peak (reach a maximum)?

www.EngineeringBooksPdf.com

29. Assume that another loop of wire, 90° from the first loop, is added to the dc generator in Problem 28. Describe the output voltage. Let the maximum voltage be 10 V.

MULTISIM TROUBLESHOOTING PROBLEMS

30. Open file P07-30; files are found at www.prenhall.com/floyd. Determine if there is a fault in the circuit. If so, identify the fault.

31. Open file P07-31 and determine if there is a fault in the circuit. If so, identify the fault.

ANSWERS

SECTION CHECKUPS

SECTION 1 The Magnetic Field

1. The north poles repel.
2. Magnetic flux is the group of lines of force that make up a magnetic field; magnetic flux density is the flux per area.
3. The gauss and the tesla
4. $B = \phi/A = 900\,\mu\text{T}$

SECTION 2 Electromagnetism

1. Electromagnetism is produced by current through a conductor. An electromagnetic field exists only when there is current. A magnetic field exists independently of current.
2. The direction of the magnetic field also reverses when the current is reversed.
3. Flux equals magnetomotive force divided by reluctance.
4. Flux is analogous to current, mmf is analogous to voltage, and reluctance is analogous to resistance.

SECTION 3 Electromagnetic Devices

1. A solenoid provides mechanical movement of a shaft. A relay provides an electrical contact closure.
2. The movable part of a solenoid is the plunger.
3. The movable part of a relay is the armature.
4. The d'Arsonval meter movement is based on the interaction of magnetic fields.

SECTION 4 Magnetic Hysteresis

1. In a wirewound core, an increase in current increases the flux density.
2. Retentivity is the ability of a material to remain magnetized after removal of the magnetizing force.

SECTION 5 Electromagnetic Induction

1. The induced voltage is zero.
2. The induced voltage increases.
3. A force is exerted on the current-carrying conductor in a magnetic field.
4. The induced voltage is zero.

SECTION 6 DC Generators

1. The rotor
2. The commutator reverses the current in the rotating coil.
3. Greater resistance will reduce the magnetic flux, causing the output voltage to drop.
4. A generator in which the field windings derive their current from the output

www.EngineeringBooksPdf.com

SECTION 7 DC Motors

1. Back emf is a voltage developed in a motor because of generator action as the rotor turns. It opposes the original supply voltage.
2. Back emf reduces the armature current.
3. A series-wound motor
4. Higher reliability because there are no brushes to wear out

RELATED PROBLEMS FOR EXAMPLES

1 19.6×10^{-3} T

2 31.0 T

3 The reluctance is reduced to 12.8×10^6 At/Wb.

4 Reluctance is 165.7×10^3 At/Wb

5 7.2 mWb

6 $F_m = 42.5$ At; $\mathcal{R} = 8.5 \times 10^4$ At/Wb

7 40 mV

8 The direction is along the negative x axis.

9 0.18 hp

SELF-TEST

1. (b) **2.** (c) **3.** (a) **4.** (d) **5.** (b) **6.** (c) **7.** (a) **8.** (d)
9. (c) **10.** (c) **11.** (b) **12.** (c) **13.** (a) **14.** (d) **15.** (c)

TRUE/FALSE QUIZ

1. T **2.** F **3.** F **4.** F **5.** T **6.** T **7.** F **8.** T
9. T **10.** F

PROBLEMS – ODD-NUMBERED ANSWERS

1. Decrease

3. 37.5 μWb

5. 1000 G

7. 597

9. 1500 At

11. **(a)** Electromagnetic force **(b)** Spring force

13. Electromagnetic force

15. Change the current.

17. Material A

19. 1 mA

21. 3.02 m/s

23. 56.3 W

25. **(a)** 168 W **(b)** 14 W

27. 80.6%

29. The output voltage has a 10 V dc peak with a 120 Hz ripple.

31. Design is flawed. Twelve volts is not enough voltage to operate two 12 V relays in series; 24 V is too much voltage to operate a 12 V lamp. Install a separate 12 V power supply for the lamp and change the 12 V to 24 V for the relays.

PHOTO CREDITS FOR REOCCURRING IMAGES

CD Icon: Stockbyte/Getty Images; **Computer Chips:** Photodisc/Thinkstock; **Computer:** Jeff Maloney/Photodisc/Getty Images; **Fiber Optic:** discpicture/Shutterstock.

www.EngineeringBooksPdf.com

Introduction to Alternating Current and Voltage

CHAPTER OUTLINE

1 The Sinusoidal Waveform
2 Voltage and Current Values of Sine Waves
3 Angular Measurement of a Sine Wave
4 The Sine Wave Formula
5 Analysis of AC Circuits
6 Alternators (AC Generators)
7 AC Motors
8 Nonsinusoidal Waveforms
9 The Oscilloscope
Application Assignment: Putting Your Knowledge to Work

CHAPTER OBJECTIVES

- Identify a sinusoidal waveform and measure its characteristics
- Determine the voltage and current values of sine waves
- Describe angular relationships of sine waves
- Mathematically analyze a sinusoidal waveform
- Apply the basic circuit laws to resistive ac circuits
- Describe how an alternator generates electricity
- Explain how ac motors convert electrical energy into rotational motion
- Identify the characteristics of basic nonsinusoidal waveforms
- Use the oscilloscope to measure waveforms

KEY TERMS

- Sine wave
- Waveform
- Cycle
- Period (T)
- Frequency (f)
- Hertz (Hz)
- Oscillator
- Function generator
- Instantaneous value
- Peak value
- Amplitude
- Peak-to-peak value
- rms value
- Degree
- Radian
- Phase
- Induction motor
- Synchronous motor
- Squirrel cage
- Slip
- Pulse
- Pulse width (t_W)
- Rise time (t_r)
- Fall time (t_f)
- Periodic
- Duty cycle
- Ramp
- Fundamental frequency
- Harmonics
- Oscilloscope

Streeter Photography/Alamy

APPLICATION ASSIGNMENT PREVIEW

As an electronics technician working for a company that designs and manufactures laboratory instruments, you have been assigned to the testing of a new function generator that produces various types of time-varying voltages with adjustable parameters. You will analyze measurements and record the limits of operation of a prototype model. After studying this chapter, you should be able to complete the application assignment.

VISIT THE COMPANION WEBSITE

Study aids for this chapter are available at http://www.pearsonhighered.com/floyd/

INTRODUCTION

This chapter provides an introduction to alternating current (ac) circuits. Alternating voltages and currents fluctuate with time and periodically change polarity and direction according to certain patterns called *waveforms*. Particular emphasis is given to the sinusoidal waveform (sine wave) because of its basic importance in ac circuits. Alternators, which generate sine waves, and ac motors are introduced. Other types of waveforms are also introduced, including pulse, triangular, and sawtooth. The use of an oscilloscope for displaying and measuring waveforms is discussed.

From Chapter 8 of *Electronics Fundamentals: Circuits, Devices, and Applications*, Eighth Edition, Thomas L. Floyd, David M. Buchla. Copyright © 2010 by Pearson Education, Inc. Published by Pearson Prentice Hall. All rights reserved.

www.EngineeringBooksPdf.com

1 THE SINUSOIDAL WAVEFORM

The sinusoidal waveform or **sine wave** is the fundamental type of alternating current (ac) and alternating voltage. It is also referred to as a sinusoidal wave, or, simply, sinusoid. The electrical service provided by the power companies is in the form of sinusoidal voltage and current. In addition, other types of repetitive **waveforms** are composites of many individual sine waves called harmonics.

After completing this section, you should be able to

- **Identify a sinusoidal waveform and measure its characteristics**
  - Define and determine the period
  - Define and determine the frequency
  - Relate the period and the frequency
  - Describe two types of electronic signal generators

▲ FIGURE 1

Symbol for a sinusoidal voltage source.

Sine waves, or sinusoids, are produced by two types of sources: rotating electrical machines (ac generators) or electronic oscillator circuits, which are used in instruments commonly known as electronic signal generators. Electronic signal generators are covered in this section; alternators, which generate ac by electromechanical means, are covered in Section 6. Figure 1 shows the symbol used to represent a source of sinusoidal voltage.

Figure 2 is a graph that shows the general shape of a sine wave, which can be either an alternating current or an alternating voltage. Voltage (or current) is displayed on the vertical axis, and time (t) is displayed on the horizontal axis. Notice how the voltage (or current) varies with time. Starting at zero, the voltage (or current) increases to a positive maximum (peak), returns to zero, and then increases to a negative maximum (peak) before returning again to zero, thus completing one full cycle.

▶ FIGURE 2

Graph of one cycle of a sine wave.

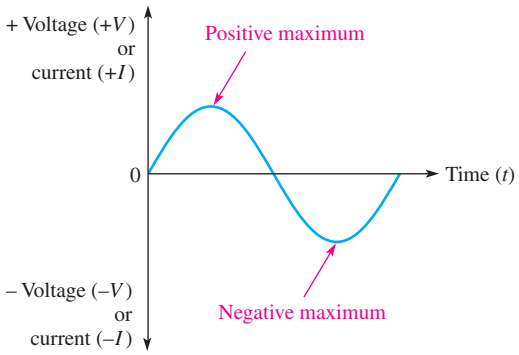

Polarity of a Sine Wave

As mentioned, a sine wave changes polarity at its zero value; that is, it alternates between positive and negative values. When a sinusoidal voltage source (V_s) is applied to a resistive circuit, as in Figure 3, an alternating sinusoidal current results. When the voltage changes polarity, the current correspondingly changes direction as indicated.

During the positive alternation of the source voltage V_s, the current is in the direction shown in Figure 3(a). During a negative alternation of the source voltage, the current is in the opposite direction, as shown in Figure 3(b). The combined positive and negative alternations make up one **cycle** of a sine wave.

This icon indicates selected websites for further information on topics in this section. See the Companion Website provided with this text.

www.EngineeringBooksPdf.com

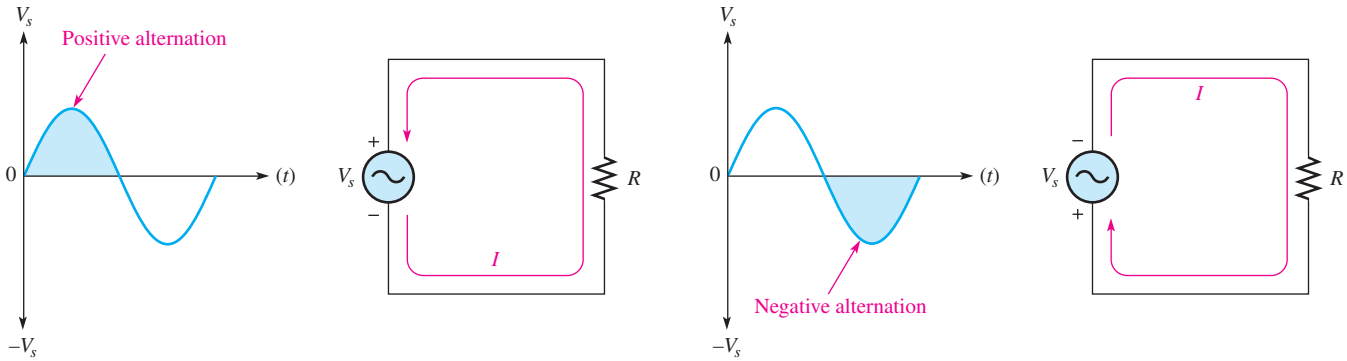

(a) During a positive alternation of the voltage, current is in the direction shown.

(b) During a negative alternation of the voltage, current reverses direction, as shown.

▲ **FIGURE 3**

Alternating current and voltage.

Period of a Sine Wave

A sine wave varies with time (t) in a definable manner.

The time required for a given sine wave to complete one full cycle is called the period (T).

Figure 4(a) illustrates the period of a sine wave. Typically, a sine wave continues to repeat itself in identical cycles, as shown in Figure 4(b). Since all cycles of a repetitive sine wave are the same, the period is always a fixed value for a given sine wave. The period of a sine wave can be measured from a zero crossing to the next corresponding zero crossing, as indicated in Figure 4(a). The period can also be measured from any peak in a given cycle to the corresponding peak in the next cycle.

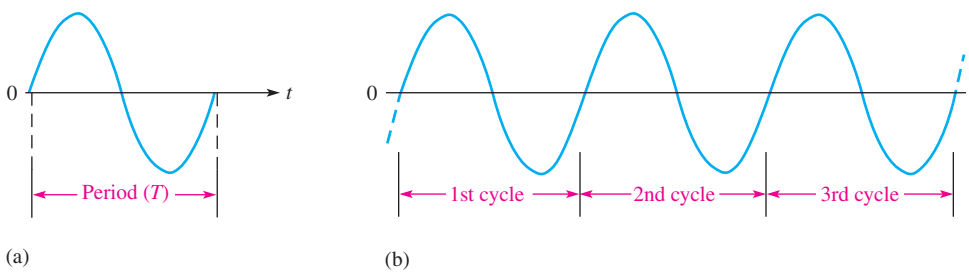

◀ **FIGURE 4**

The period of a given sine wave is the same for each cycle.

EXAMPLE 1

What is the period of the sine wave in Figure 5?

▶ **FIGURE 5**

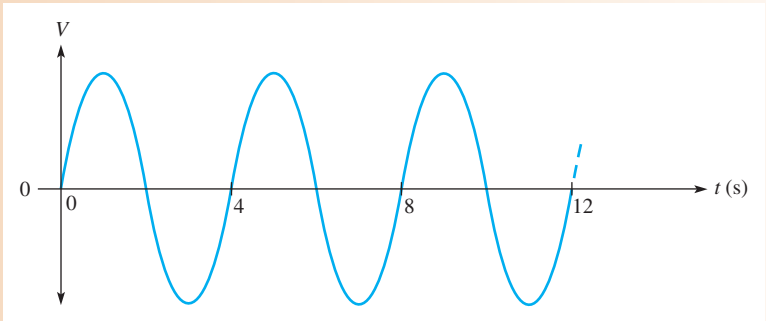

www.EngineeringBooksPdf.com

Solution As shown in Figure 5, it takes twelve seconds (12 s) to complete three cycles. Therefore, to complete one cycle it takes four seconds (4 s), which is the period.

$$T = \mathbf{4\,s}$$

*Related Problem** What is the period if a given sine wave goes through five cycles in 12 s?

*Answers are at the end of the chapter.

EXAMPLE 2

Show three possible ways to measure the period of the sine wave in Figure 6. How many cycles are shown?

▶ **FIGURE 6**

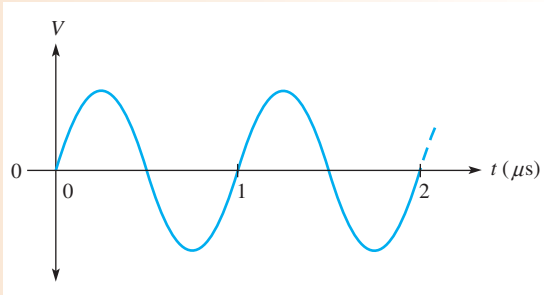

Solution **Method 1:** The period can be measured from one zero crossing to the corresponding zero crossing in the next cycle (the slope must be the same at the corresponding zero crossings).

Method 2: The period can be measured from the positive peak in one cycle to the positive peak in the next cycle.

Method 3: The period can be measured from the negative peak in one cycle to the negative peak in the next cycle.

These measurements are indicated in Figure 7, where **two cycles** of the sine wave are shown. Keep in mind that you obtain the same value for the period no matter which corresponding peaks or corresponding zero crossings on the waveform you use.

▶ **FIGURE 7**

Measurement of the period of a sine wave.

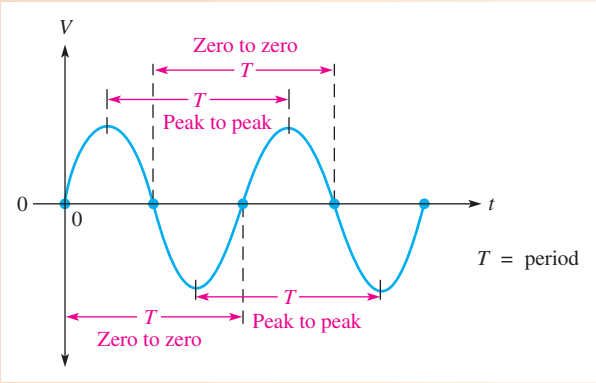

Related Problem If a positive peak occurs at 1 ms and the next positive peak occurs at 2.5 ms, what is the period?

www.EngineeringBooksPdf.com

Frequency of a Sine Wave

Frequency is the number of cycles that a sine wave completes in one second.

The more cycles completed in one second, the higher the frequency. Frequency (f) is measured in units of **hertz (Hz)**. One hertz is equivalent to one cycle per second; for example, 60 Hz is 60 cycles per second. Figure 8 shows two sine waves. The sine wave in part (a) completes two full cycles in one second. The one in part (b) completes four cycles in one second. Therefore, the sine wave in part (b) has twice the frequency of the one in part (a).

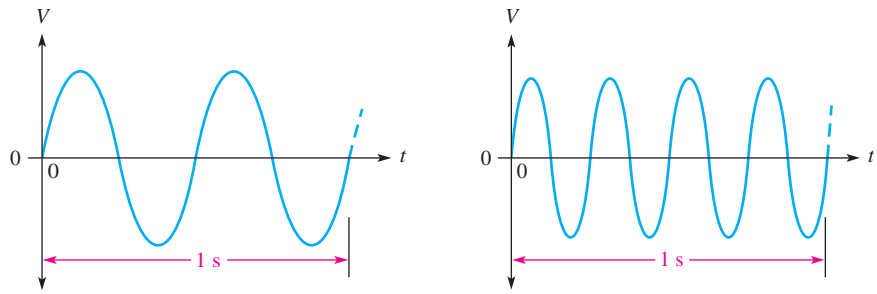

(a) Lower frequency: fewer cycles per second (b) Higher frequency: more cycles per second

▲ FIGURE 8

Illustration of frequency.

HISTORY NOTE

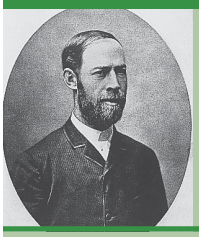

Heinrich Rudolf Hertz 1857–1894

Hertz, a German physicist, was the first to broadcast and receive electromagnetic (radio) waves. He produced electromagnetic waves in the laboratory and measured their parameters. Hertz also proved that the nature of the reflection and refraction of electromagnetic waves was the same as that of light. The unit of frequency is named in his honor. (Photo credit: Deutsches Museum, courtesy AIP Emilio Segre Visual Archives, Physics Today Collection.)

Relationship of Frequency and Period

The formulas for the relationship between frequency and period are

$$f = \frac{1}{T} \qquad \text{Equation 1}$$

$$T = \frac{1}{f} \qquad \text{Equation 2}$$

There is a reciprocal relationship between f and T. Knowing one, you can calculate the other with the x^{-1} or $1/x$ key on your calculator. (On some calculators, the reciprocal key is a secondary function.) This inverse relationship indicates that a sine wave with a longer period goes through fewer cycles in one second than one with a shorter period.

EXAMPLE 3

Which sine wave in Figure 9 has the higher frequency? Determine the frequency and the period of both waveforms.

▶ FIGURE 9

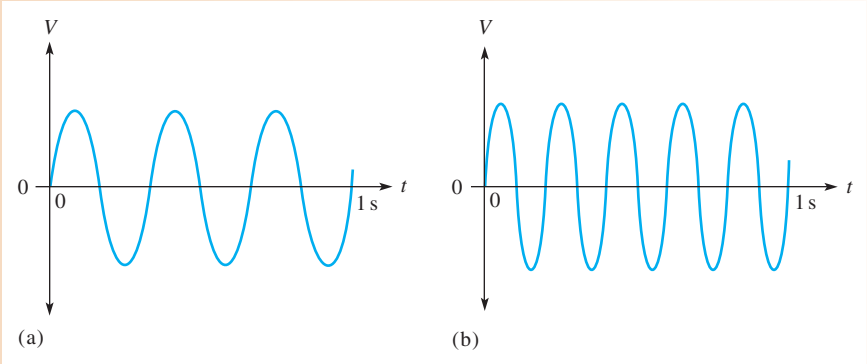

www.EngineeringBooksPdf.com

Solution The sine wave in Figure 9(b) has the higher frequency because it completes more cycles in 1 s than does the one in part (a).

In Figure 9(a), three cycles are completed in 1 s. Therefore,

$$f = \mathbf{3\ Hz}$$

One cycle takes 0.333 s (one-third second), so the period is

$$T = 0.333\ \text{s} = \mathbf{333\ ms}$$

In Figure 9(b), five cycles are completed in 1 s. Therefore,

$$f = \mathbf{5\ Hz}$$

One cycle takes 0.2 s (one-fifth second), so the period is

$$T = 0.2\ \text{s} = \mathbf{200\ ms}$$

Related Problem If the time interval between consecutive negative peaks of a given sine wave is 50 μs, what is the frequency?

EXAMPLE 4 The period of a certain sine wave is 10 ms. What is the frequency?

Solution Use Equation 1.

$$f = \frac{1}{T} = \frac{1}{10\ \text{ms}} = \frac{1}{10 \times 10^{-3}\ \text{s}} = \mathbf{100\ Hz}$$

Related Problem A certain sine wave goes through four cycles in 20 ms. What is the frequency?

EXAMPLE 5 The frequency of a sine wave is 60 Hz. What is the period?

Solution Use Equation 2.

$$T = \frac{1}{f} = \frac{1}{60\ \text{Hz}} = \mathbf{16.7\ ms}$$

Related Problem If $f = 1$ kHz, what is T?

Electronic Signal Generators

The signal generator is an instrument that electronically produces sine waves for use in testing or controlling electronic circuits and systems. There are a variety of signal generators, ranging from special-purpose instruments that produce only one type of waveform in a limited frequency range to programmable instruments that produce a wide range of frequencies and a variety of waveforms. All signal generators consist basically of an **oscillator**, which is an electronic circuit that produces sinusoidal voltages or other types of waveforms whose amplitude and frequency can be adjusted.

Function Generators and Arbitrary Waveform Generators The **function generator** provides pulse waveforms as well as sine waves and triangular waves. Typical function generators are shown in Figure 10(a). The arbitrary waveform generator can be used to generate standard signals like sine waves, triangular waves, and pulses as well as signals with various shapes and characteristics. Waveforms can be defined by mathematical or graphical input. A typical arbitrary waveform generator is shown in Figure 10(b).

www.EngineeringBooksPdf.com

(a) Examples of function generators

(b) A typical arbitrary waveform generator

▲ FIGURE 10

Typical signal generators. Copyright © Tektronix, Inc. Reproduced by permission.

SECTION 1 CHECKUP
Answers are at the end of the chapter.

1. Describe one cycle of a sine wave.
2. At what point does a sine wave change polarity?
3. How many maximum points does a sine wave have during one cycle?
4. How is the period of a sine wave measured?
5. Define *frequency*, and state its unit.
6. Determine f when $T = 5\ \mu s$.
7. Determine T when $f = 120$ Hz.

2 VOLTAGE AND CURRENT VALUES OF SINE WAVES

Five ways to express and measure the value of a sine wave in terms of its voltage or its current magnitude are instantaneous, peak, peak-to-peak, rms, and average values.

After completing this section, you should be able to

- **Determine the voltage and current values of sine waves**
  - Find the instantaneous value at any point
  - Find the peak value
  - Find the peak-to-peak value
  - Define *rms* and find the rms value
  - Explain why the average value of an alternating sine wave is always zero over a complete cycle
  - Find the half-cycle average value

Instantaneous Value

Figure 11 illustrates that at any point in time on a sine wave, the voltage (or current) has an **instantaneous value**. This instantaneous value is different at different points along the curve. Instantaneous values are positive during the positive alternation and negative during

www.EngineeringBooksPdf.com

the negative alternation. Instantaneous values of voltage and current are symbolized by lowercase v and i, respectively. The curve in part (a) shows voltage only, but it applies equally for current when v's are replaced with i's. An example of instantaneous values is shown in part (b), where the instantaneous voltage is 3.1 V at 1 μs, 7.07 V at 2.5 μs, 10 V at 5 μs, 0 V at 10 μs, −3.1 V at 11 μs, and so on.

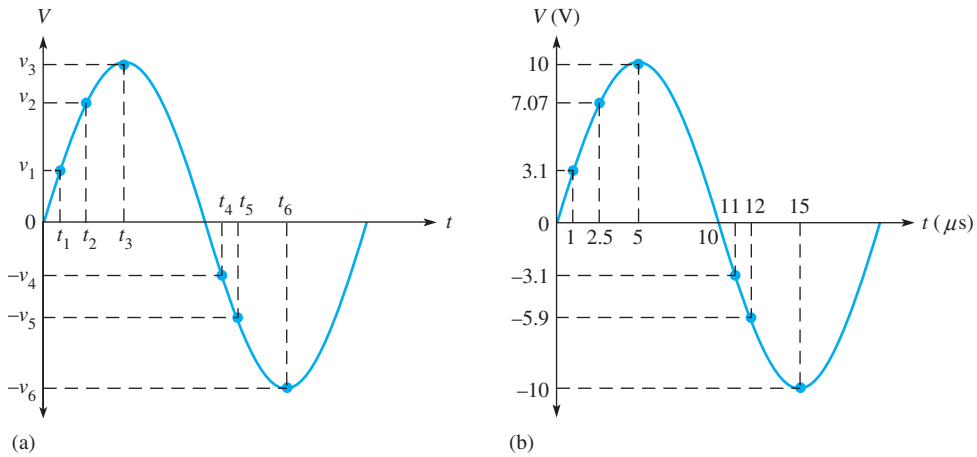

▲ **FIGURE 11**

Example of instantaneous values of a sinusoidal voltage.

Peak Value

The **peak value** of a sine wave is the value of voltage (or current) at the positive or the negative maximum (peaks) with respect to zero. Since positive and negative peak values are equal in **magnitude**, a sine wave is characterized by a single peak value, as is illustrated in Figure 12. For a given sine wave, the peak value is constant and is represented by V_p or I_p. The maximum or peak value of a sine wave is also called its **amplitude**. The amplitude is measured from the 0 V line to the peak. In the figure, the peak voltage is 8 V, which is also its amplitude.

▶ **FIGURE 12**

Peak voltage.

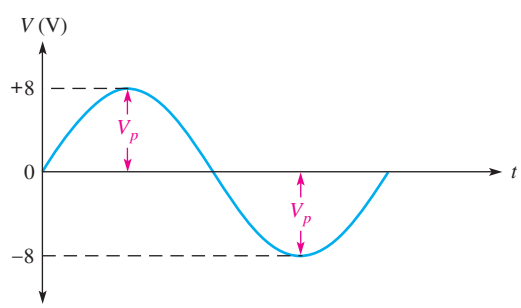

Peak-to-Peak Value

The **peak-to-peak value** of a sine wave, as illustrated in Figure 13, is the voltage (or current) from the positive peak to the negative peak. It is always twice the peak value as expressed by the following equations. Peak-to-peak values are represented by V_{pp} or I_{pp}.

Equation 3
$$V_{pp} = 2V_p$$

Equation 4
$$I_{pp} = 2I_p$$

In Figure 13, the peak-to-peak voltage is 16 V.

www.EngineeringBooksPdf.com

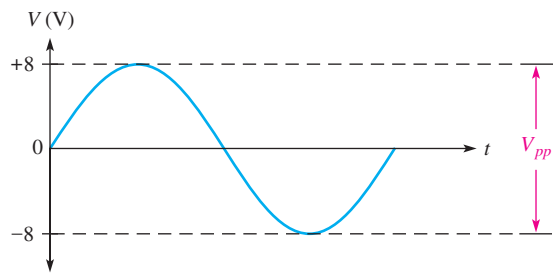

◀ FIGURE 13

Peak-to-peak voltage.

RMS Value

The term *rms* stands for *root mean square*. Most ac voltmeters display the rms voltage. The 120 V at your wall outlet is an rms value. The **rms value**, also referred to as the **effective value**, of a sinusoidal voltage is actually a measure of the heating effect of the sine wave. For example, when a resistor is connected across an ac (sinusoidal) voltage source, as shown in Figure 14(a), it dissipates a certain amount of heat. Figure 14(b) shows the same resistor connected across a dc voltage source. The value of the ac voltage can be adjusted so that the resistor gives off the same amount of heat as it does when connected to the dc source.

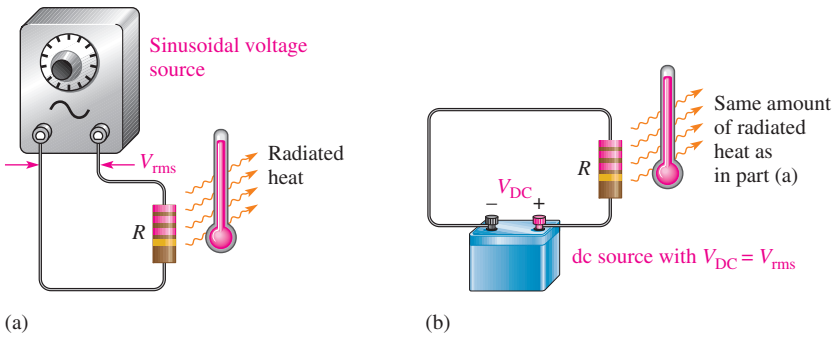

▲ FIGURE 14

When the same amount of heat is being produced by the resistor in both setups, the sinusoidal voltage has an rms value equal to the dc voltage.

The rms value of a sinusoidal voltage is equal to the dc voltage that produces the same amount of heat in a resistance as does the sinusoidal voltage.

You can convert the peak value of a sine wave to the corresponding rms value by using the following relationships for either voltage or current:

$$V_{rms} = 0.707V_p \qquad \text{Equation 5}$$

$$I_{rms} = 0.707I_p \qquad \text{Equation 6}$$

Using these formulas, you can also determine the peak value if you know the rms value.

$$V_p = \frac{V_{rms}}{0.707}$$

$$V_p = 1.414V_{rms} \qquad \text{Equation 7}$$

Similarly,

$$I_p = 1.414I_{rms} \qquad \text{Equation 8}$$

www.EngineeringBooksPdf.com

To find the peak-to-peak values, simply double the peak value, which is equivalent to multiplying the rms value by 2.828.

Equation 9

$$V_{pp} = 2.828V_{\text{rms}}$$

and

Equation 10

$$I_{pp} = 2.828I_{\text{rms}}$$

Average Value

The average value of a sine wave when taken over one complete cycle is always zero because the positive values (above the zero crossing) offset the negative values (below the zero crossing).

To be useful for comparison purposes and in determining the average value of a rectified voltage such as found in power supplies, the **average value** of a sine wave is defined over a half-cycle rather than over a full cycle. The average value is expressed in terms of the peak value as follows for both voltage and current sine waves:

Equation 11

$$V_{\text{avg}} = 0.637V_p$$

Equation 12

$$I_{\text{avg}} = 0.637I_p$$

The half-cycle average value of a voltage sine wave is illustrated in Figure 15.

▶ **FIGURE 15**

Half-cycle average value.

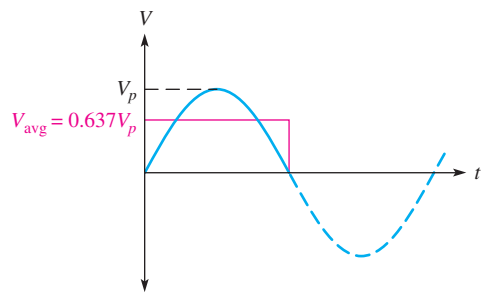

EXAMPLE 6

Determine V_p, V_{pp}, V_{rms}, and the half-cycle V_{avg} for the sine wave in Figure 16.

▶ **FIGURE 16**

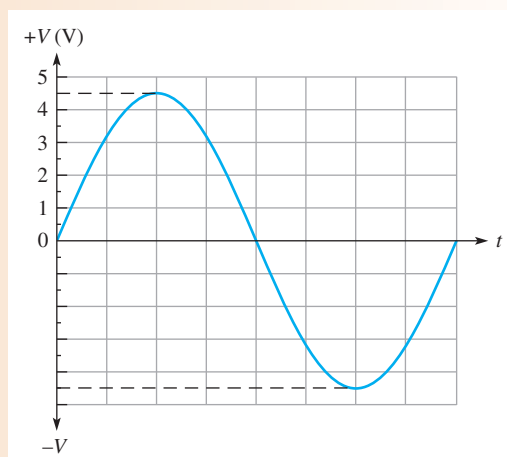

www.EngineeringBooksPdf.com

Solution As taken directly from the graph, $V_p = \mathbf{4.5\ V}$. From this value, calculate the other values.

$$V_{pp} = 2V_p = 2(4.5\text{ V}) = \mathbf{9\ V}$$
$$V_{rms} = 0.707V_p = 0.707(4.5\text{ V}) = \mathbf{3.18\ V}$$
$$V_{avg} = 0.637V_p = 0.637(4.5\text{ V}) = \mathbf{2.87\ V}$$

Related Problem If $V_p = 25$ V, determine V_{pp}, V_{rms}, and V_{avg} for a sine wave.

SECTION 2 CHECKUP

1. Determine V_{pp} in each case when
   (a) $V_p = 1$ V (b) $V_{rms} = 1.414$ V (c) $V_{avg} = 3$ V
2. Determine V_{rms} in each case when
   (a) $V_p = 2.5$ V (b) $V_{pp} = 10$ V (c) $V_{avg} = 1.5$ V
3. Determine the half-cycle V_{avg} in each case when
   (a) $V_p = 10$ V (b) $V_{rms} = 2.3$ V (c) $V_{pp} = 60$ V

3 ANGULAR MEASUREMENT OF A SINE WAVE

As you have seen, sine waves can be measured along the horizontal axis on a time basis; however, since the time for completion of one full cycle or any portion of a cycle is frequency-dependent, it is often useful to specify points on the sine wave in terms of an angular measurement expressed in degrees or radians. Angular measurement is independent of frequency.

After completing this section, you should be able to

- **Describe angular relationships of sine waves**
  - Show how to measure a sine wave in terms of angles
  - Define *radian*
  - Convert radians to degrees
  - Determine the phase of a sine wave

A sinusoidal voltage can be produced by an alternator, which is an ac generator. There is a direct relationship between the rotation of the rotor in an alternator and the sine wave output. Thus, the angular measurement of the rotor's position is directly related to the angle assigned to the sine wave.

Angular Measurement

A **degree** is an angular measurement corresponding to 1/360 of a circle or a complete revolution. A **radian** (rad) is the angle formed when the distance along the circumference of a circle is equal to the radius of the circle. One radian is equivalent to 57.3°, as illustrated in Figure 17. In a 360° revolution, there are 2π radians.

The Greek letter π (pi) represents the ratio of the circumference of any circle to its diameter and has a constant value of approximately 3.1416.

Scientific calculators have a π function so that the actual numerical value does not have to be entered.

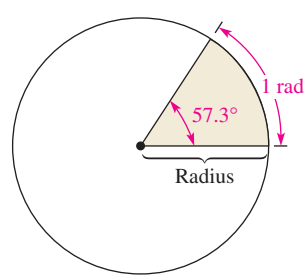

▲ FIGURE 17

Angular measurement showing relationship of the radian to degrees.

www.EngineeringBooksPdf.com

Table 1 lists several values of degrees and the corresponding radian values. These angular measurements are illustrated in Figure 18.

▼ TABLE 1

DEGREES (°)	RADIANS (RAD)
0	0
45	$\pi/4$
90	$\pi/2$
135	$3\pi/4$
180	π
225	$5\pi/4$
270	$3\pi/2$
315	$7\pi/4$
360	2π

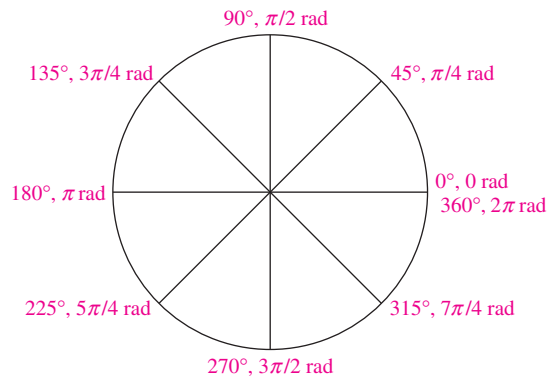

▲ FIGURE 18

Angular measurements starting at 0° and going counterclockwise.

Radian/Degree Conversion

Degrees can be converted to radians using Equation 13.

Equation 13

$$\textbf{rad} = \left(\frac{\pi\ \textbf{rad}}{180^\circ}\right) \times \textbf{degrees}$$

Similarly, radians can be converted to degrees with Equation 14.

Equation 14

$$\textbf{degrees} = \left(\frac{180^\circ}{\pi\ \textbf{rad}}\right) \times \textbf{rad}$$

EXAMPLE 7

(a) Convert 60° to radians. **(b)** Convert $\pi/6$ radian to degrees.

Solution

(a) $\text{Rad} = \left(\frac{\pi\ \text{rad}}{180^\circ}\right)60^\circ = \boldsymbol{\frac{\pi}{3}}\ \textbf{rad}$

(b) $\text{Degrees} = \left(\frac{180^\circ}{\pi\ \text{rad}}\right)\left(\frac{\pi}{6}\text{rad}\right) = \mathbf{30^\circ}$

Related Problem **(a)** Convert 15° to radians. **(b)** Convert $5\pi/8$ radians to degrees.

Sine Wave Angles

The angular measurement of a sine wave is based on 360° or 2π rad for a complete cycle. A half-cycle is 180° or π rad; a quarter-cycle is 90° or $\pi/2$ rad; and so on. Figure 19(a) shows angles in degrees over a full cycle of a sine wave; part (b) shows the same points in radians.

www.EngineeringBooksPdf.com

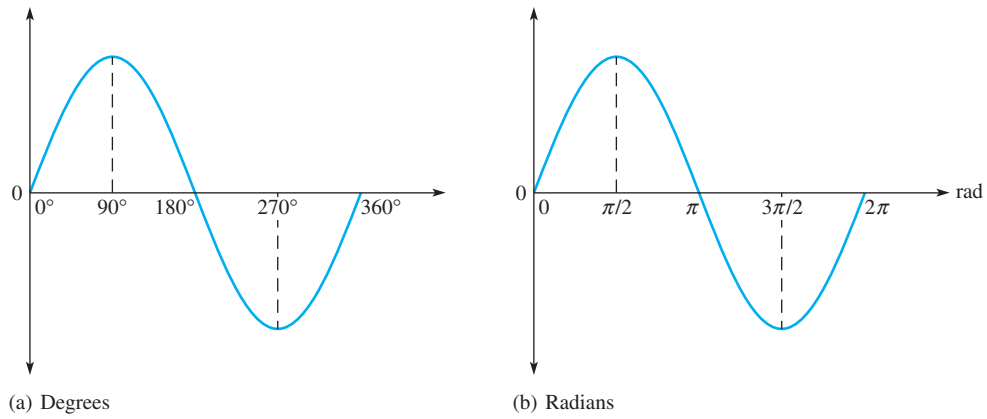

(a) Degrees (b) Radians

▲ **FIGURE 19**

Sine wave angles.

Phase of a Sine Wave

The **phase** of a sine wave is an angular measurement that specifies the position of that sine wave relative to a reference. Figure 20 shows one cycle of a sine wave to be used as the reference. Note that the first positive-going crossing of the horizontal axis (zero crossing) is at 0° (0 rad), and the positive peak is at 90° ($\pi/2$ rad). The negative-going zero crossing is at 180° (π rad), and the negative peak is at 270° ($3\pi/2$ rad). The cycle is completed at 360° (2π rad). When the sine wave is shifted left or right with respect to this reference, there is a phase shift.

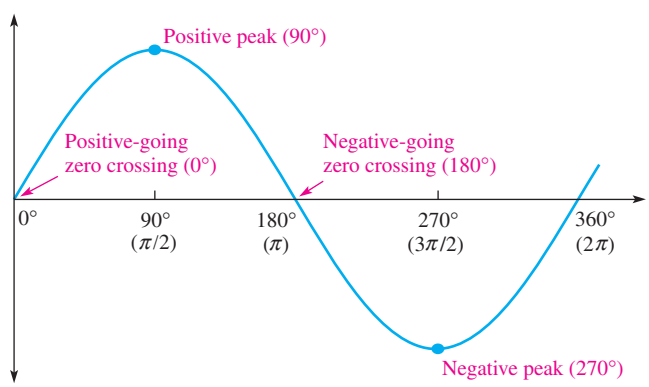

▲ **FIGURE 20**

Phase reference.

Figure 21 illustrates phase shifts of a sine wave. In part (a), sine wave *B* is shifted to the right by 90° ($\pi/2$ rad) with respect to sine wave *A*. Thus, there is a phase angle of 90° between sine wave *A* and sine wave *B*. In terms of time, the positive peak of sine wave *B* occurs later than the positive peak of sine wave *A* because time increases to the right along the horizontal axis. In this case, sine wave *B* is said to **lag** sine wave *A* by 90° or $\pi/2$ radians. In other words, sine wave *A* leads sine wave *B* by 90°.

In Figure 21(b), sine wave *B* is shown shifted left by 90° with respect to sine wave *A*. Thus, again there is a phase angle of 90° between sine wave *A* and sine wave *B*. In this case, the positive peak of sine wave *B* occurs earlier in time than that of sine wave *A*; therefore, sine wave *B* is said to **lead** sine wave *A* by 90°. In both cases there is a 90° phase angle between the two waveforms.

www.EngineeringBooksPdf.com

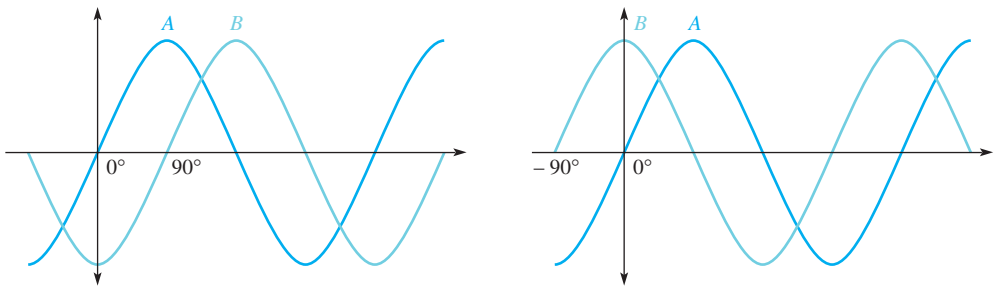

(a) *A* leads *B* by 90°, or *B* lags *A* by 90°.

(b) *B* leads *A* by 90°, or *A* lags *B* by 90°.

▲ **FIGURE 21**

Illustration of a phase shift.

EXAMPLE 8

What are the phase angles between sine waves *A* and *B* in Figure 22(a) and 22(b)?

▶ **FIGURE 22**

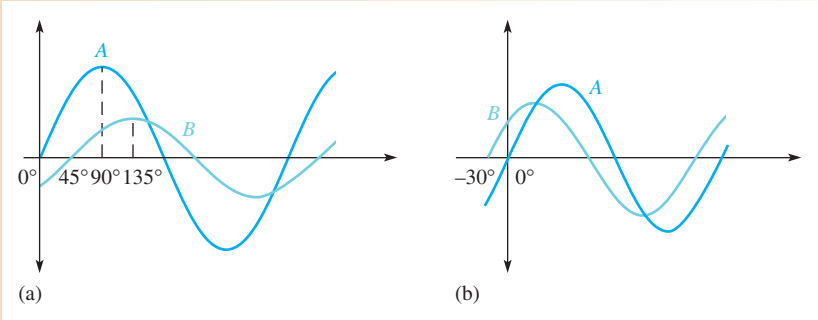

Solution In Figure 22(a), the zero crossing of sine wave *A* is at 0°, and the corresponding zero crossing of sine wave *B* is at 45°. There is a **45°** phase angle between the two waveforms with sine wave *A* leading.

In Figure 22(b) the zero crossing of sine wave *B* is at −30°, and the corresponding zero crossing of sine wave *A* is at 0°. There is a **30°** phase angle between the two waveforms with sine wave *B* leading.

Related Problem If the positive-going zero crossing of one sine wave is at 15° relative to the 0° reference and that of the second sine wave is at 23° relative to the 0° reference, what is the phase angle between the sine waves?

When you measure the phase shift between two waveforms on an oscilloscope, you should align the waveforms vertically and make them appear to have the same amplitude. This is done by taking one of the channels out of vertical calibration and adjusting the corresponding waveform until its apparent amplitude equals that of the other waveform. This procedure eliminates the error caused if both waveforms are not measured at their exact center.

Polyphase Power

One important application of phase-shifted sine waves is in electrical power systems. Electrical utilities generate ac with three phases that are separated by 120° as shown in Figure 23. The reference is called neutral. Normally, three-phase power is delivered to the user with four lines—three hot lines and neutral. There are important advantages to three-phase power for ac motors. Three-phase motors are more efficient and simpler than an equivalent single-phase motor. Motors are discussed further in Section 7.

www.EngineeringBooksPdf.com

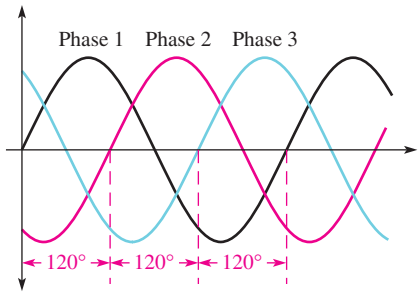

◀ FIGURE 23

Three-phase power waveforms.

The three phases can be split up by the utility company to supply three separate single-phase systems. If only one of the three phases plus neutral is supplied, the result is standard 120 V, which is single-phase power. Single-phase power is distributed to residential and small commercial buildings; it consists of two 120 V hot lines that are 180° out of phase with each other and a neutral, which is grounded at the service entrance. The two hot lines allow for connecting to 240 V for high-power appliances (dryers, air conditioners).

SECTION 3 CHECKUP

1. When the positive-going zero crossing of a sine wave occurs at 0°, at what angle does each of the following points occur?
   (a) positive peak
   (b) negative-going zero crossing
   (c) negative peak
   (d) end of first complete cycle
2. A half cycle is completed in _____ degrees, or _____ radians.
3. A full cycle is completed in _____ degrees, or _____ radians.
4. Determine the phase angle between the sine waves *B* and *C* in Figure 24.

▶ FIGURE 24

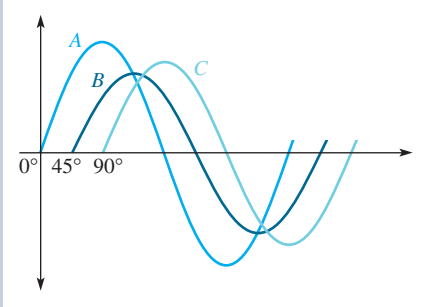

4 THE SINE WAVE FORMULA

A sine wave can be graphically represented by voltage or current values on the vertical axis and by angular measurement (degrees or radians) along the horizontal axis. This graph can be expressed mathematically, as you will see.

After completing this section, you should be able to

- **Mathematically analyze a sinusoidal waveform**
  - State the sine wave formula
  - Find instantaneous values using the sine wave formula

www.EngineeringBooksPdf.com

A generalized graph of one cycle of a sine wave is shown in Figure 25. The sine wave amplitude, A, is the maximum value of the voltage or current on the vertical axis; angular values run along the horizontal axis. The variable y is an instantaneous value representing either voltage or current at a given angle, θ. The symbol θ is the Greek letter *theta.*

▶ **FIGURE 25**

One cycle of a generic sine wave showing amplitude and phase.

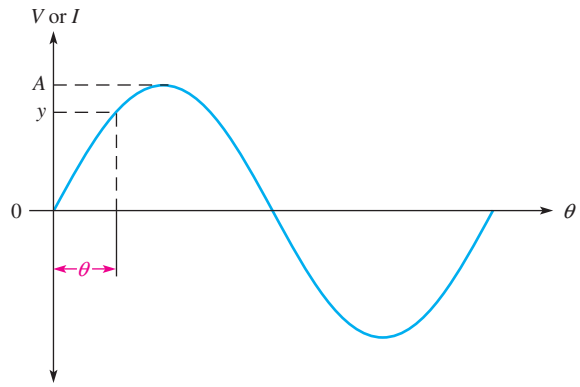

All electrical sine waves follow a specific mathematical formula. The general expression for the sine wave curve in Figure 25 is

Equation 15

$$y = A \sin \theta$$

This formula states that any point on the sine wave, represented by an instantaneous value y, is equal to the maximum value A times the sine (sin) of the angle θ at that point. For example, a certain voltage sine wave has a peak value of 10 V. The instantaneous voltage at a point 60° along the horizontal axis can be calculated as follows, where $y = v$ and $A = V_p$:

$$v = V_p \sin \theta = (10\text{ V})\sin 60° = (10\text{ V})0.866 = 8.66\text{ V}$$

Figure 26 shows this particular instantaneous value on the curve. You can find the sine of any angle on most calculators by first entering the value of the angle and then pressing the SIN key. The calculator must be in the degree mode.

▶ **FIGURE 26**

Illustration of the instantaneous value of a voltage sine wave at $\theta = 60°$.

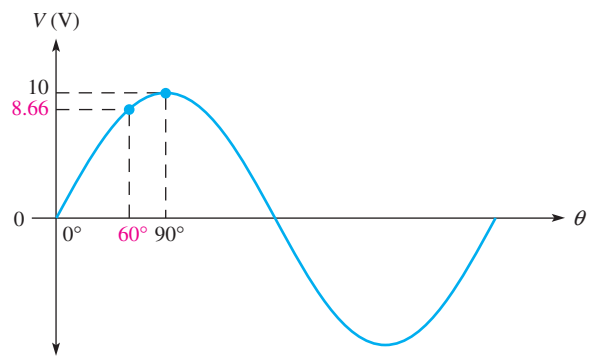

Derivation of the Sine Wave Formula

As you move along the horizontal axis of a sine wave, the angle increases and the magnitude (height along the y axis) varies. At any given instant, the magnitude of a sine wave can be described by the values of the phase angle and the amplitude (maximum height) and can, therefore, be represented as a **phasor** quantity. A phasor quantity is one that has both magnitude and direction (phase angle). A phasor is represented graphically as an arrow that rotates around a fixed point. The length of a sine wave phasor is the peak value (amplitude), and its angular position as it rotates is the phase angle. One full cycle of a sine wave can be viewed as the rotation of a phasor through 360°.

www.EngineeringBooksPdf.com

Figure 27 illustrates a phasor rotating counterclockwise through a complete revolution of 360°. If the tip of the phasor is projected over to a graph with the phase angles running along the horizontal axis, a sine wave is "traced out," as shown in the figure. At each angular position of the phasor, there is a corresponding magnitude value. As you can see, at 90° and at 270°, the amplitude of the sine wave is maximum and equal to the length of the phasor. At 0° and at 180°, the sine wave is equal to zero because the phasor lies horizontally at these points.

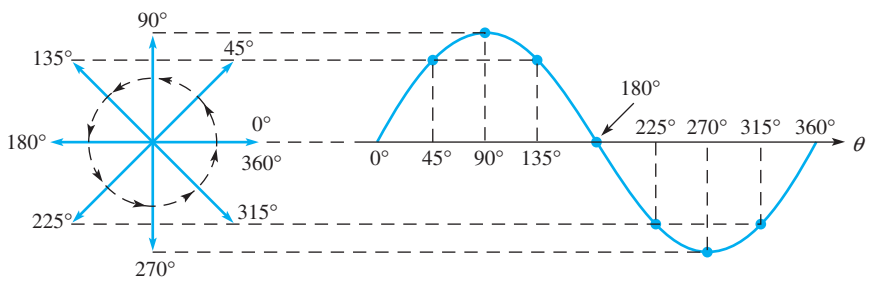

FIGURE 27

Sine wave represented by a rotating phasor.

Let's examine a phasor representation at one specific angle. Figure 28 shows the voltage phasor at an angular position of 45° and the corresponding point on the sine wave. The instantaneous value, v, of the sine wave at this point is related to both the position (angle) and the length (amplitude) of the phasor. The vertical distance from the phasor tip down to the horizontal axis represents the instantaneous value of the sine wave at that point.

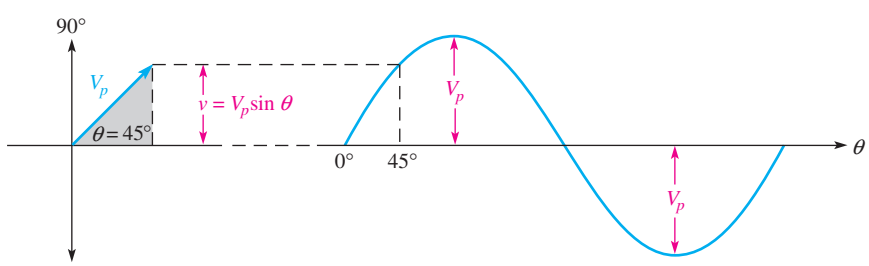

FIGURE 28

Right triangle derivation of sine wave formula, $v = V_p \sin\theta$.

Notice that when a vertical line is drawn from the phasor tip down to the horizontal axis, a **right triangle** is formed, as shown in Figure 28. The length of the phasor is the **hypotenuse** of the triangle, and the vertical projection is the opposite side. From trigonometry, *the opposite side of a right triangle is equal to the hypotenuse times the sine of the angle θ*. In this case, the length of the phasor is the peak value of the voltage sine wave, V_p. Thus, the opposite side of the triangle, which is the instantaneous value, can be expressed as

$$v = V_p \sin\theta \qquad \text{Equation 16}$$

This formula also applies to a current sine wave.

$$i = I_p \sin\theta \qquad \text{Equation 17}$$

Expressions for Phase-Shifted Sine Waves

When a sine wave is shifted to the right of the reference (lags) by a certain angle, ϕ, (Greek letter phi) as illustrated in Figure 29(a), the general expression is

$$y = A \sin(\theta - \phi) \qquad \text{Equation 18}$$

www.EngineeringBooksPdf.com

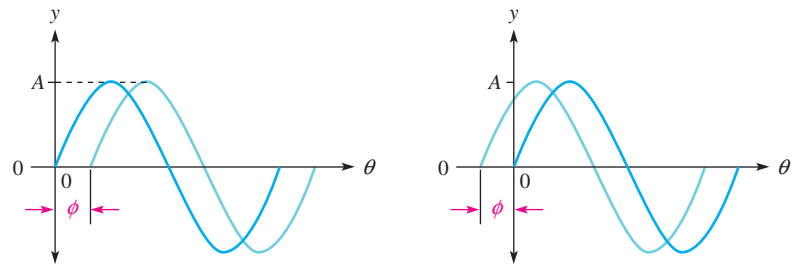

(a) $y = A \sin(\theta - \phi)$ (b) $y = A \sin(\theta + \phi)$

▲ FIGURE 29

Shifted sine waves.

where y represents instantaneous voltage or current, and A represents the peak value (amplitude). When a sine wave is shifted to the left of the reference (leads) by a certain angle, ϕ, as shown in Figure 29(b), the general expression is

Equation 19

$$y = A \sin(\theta + \phi)$$

EXAMPLE 9

Determine the instantaneous value at 90° on the horizontal axis for each voltage sine wave in Figure 30.

▶ FIGURE 30

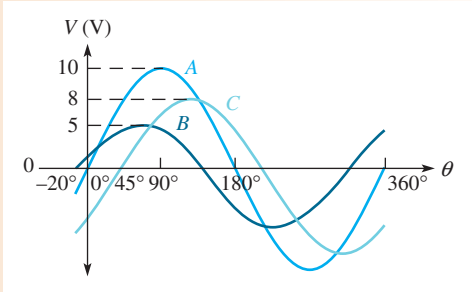

Solution Sine wave A is the reference. Sine wave B is shifted left 20° with respect to A, so B leads. Sine wave C is shifted right 45° with respect to A, so C lags.

$$v_A = V_p \sin\theta = (10\text{ V})\sin 90° = \mathbf{10\ V}$$
$$v_B = V_p \sin(\theta + \phi_B) = (5\text{ V})\sin(90° + 20°) = (5\text{ V})\sin 110° = \mathbf{4.70\ V}$$
$$v_C = V_p \sin(\theta - \phi_C) = (8\text{ V})\sin(90° - 45°) = (8\text{ V})\sin 45° = \mathbf{5.66\ V}$$

Related Problem A sine wave has a peak value of 20 V. What is the instantaneous value at +65° from the 0° reference?

SECTION 4 CHECKUP

1. Determine the sine of the following angles:
   (a) 30° (b) 60° (c) 90°
2. Calculate the instantaneous value at 120° for the sine wave in Figure 26.
3. Determine the instantaneous value at 45° on a voltage sine wave that leads the zero reference by 10° ($V_p = 10$ V).

www.EngineeringBooksPdf.com

5 ANALYSIS OF AC CIRCUITS

When a time-varying ac voltage such as a sinusoidal voltage is applied to a circuit, the circuit laws and power formulas that you studied earlier still apply. Ohm's law, Kirchhoff's laws and the power formulas apply to ac circuits in the same way that they apply to dc circuits.

After completing this section, you should be able to

- **Apply the basic circuit laws to resistive ac circuits**
  - Apply Ohm's law to resistive circuits with ac sources
  - Apply Kirchhoff's voltage law and current law to resistive circuits with ac sources
  - Determine power in resistive ac circuits
  - Determine total voltages that have both ac and dc components

If a sinusoidal voltage is applied across a resistor, as shown in Figure 31, there is a sinusoidal current. The current is zero when the voltage is zero and is maximum when the voltage is maximum. When the voltage changes polarity, the current reverses direction. As a result, the voltage and current are said to be in phase with each other.

When you use Ohm's law in ac circuits, remember that both the voltage and the current must be expressed consistently, that is, both as peak values, both as rms values, both as average values, and so on.

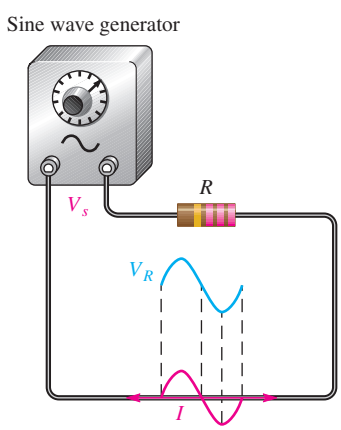

FIGURE 31

A sinusoidal voltage produces a sinusoidal current.

Kirchhoff's voltage and current laws apply to ac circuits as well as to dc circuits. Figure 32 illustrates Kirchhoff's voltage law in a resistive circuit that has a sinusoidal voltage source. As you can see, the source voltage is the sum of all the voltage drops across the resistors, just as in a dc circuit.

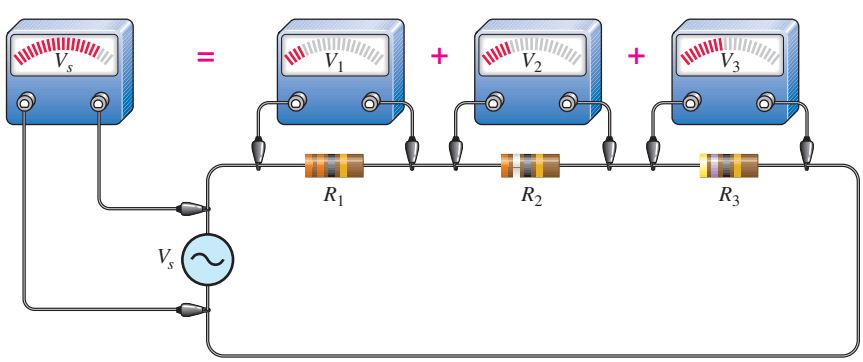

FIGURE 32

Illustration of Kirchhoff's voltage law in an ac circuit.

www.EngineeringBooksPdf.com

Power in resistive ac circuits is determined the same as for dc circuits except that you must use rms values of current and voltage. Recall that the rms value of a sine wave voltage is equivalent to a dc voltage of the same value in terms of its heating effect. The general power formulas are restated for a resistive ac circuit as

$$P = V_{rms}I_{rms}$$

$$P = \frac{V_{rms}^2}{R}$$

$$P = I_{rms}^2 R$$

EXAMPLE 10

Determine the rms voltage across each resistor and the rms current in Figure 33. The source voltage is given as an rms value. Also, determine the total power.

▶ FIGURE 33

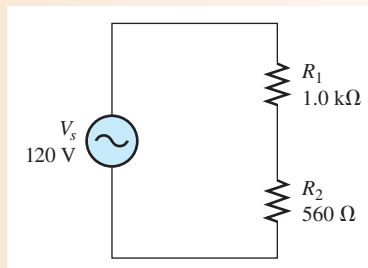

Solution The total resistance of the circuit is

$$R_{tot} = R_1 + R_2 = 1.0\,\text{k}\Omega + 560\,\Omega = 1.56\,\text{k}\Omega$$

Use Ohm's law to find the rms current.

$$I_{rms} = \frac{V_{s(rms)}}{R_{tot}} = \frac{120\text{ V}}{1.56\,\text{k}\Omega} = \mathbf{76.9\ mA}$$

The rms voltage drop across each resistor is

$$V_{1(rms)} = I_{rms}R_1 = (76.9\text{ mA})(1.0\,\text{k}\Omega) = \mathbf{76.9\ V}$$

$$V_{2(rms)} = I_{rms}R_2 = (76.9\text{ mA})(560\,\Omega) = \mathbf{43.1\ V}$$

The total power is

$$P_{tot} = I_{rms}^2 R_{tot} = (76.9\text{ mA})^2(1.56\,\text{k}\Omega) = \mathbf{9.23\ W}$$

Related Problem Repeat this example for a source voltage of 10 V peak.

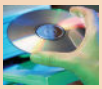

Open Multisim file E08-10; files are found at www.pearsonhighered.com/floyd/. Measure the rms voltage across each resistor and compare to the calculated values. Change the source voltage to a peak value of 10 V, measure each resistor voltage, and compare to your calculated values.

EXAMPLE 11

All values in Figure 34 are given in rms.

(a) Find the unknown peak voltage drop in Figure 34(a).

(b) Find the total rms current in Figure 34(b).

(c) Find the total power in Figure 34(b).

www.EngineeringBooksPdf.com

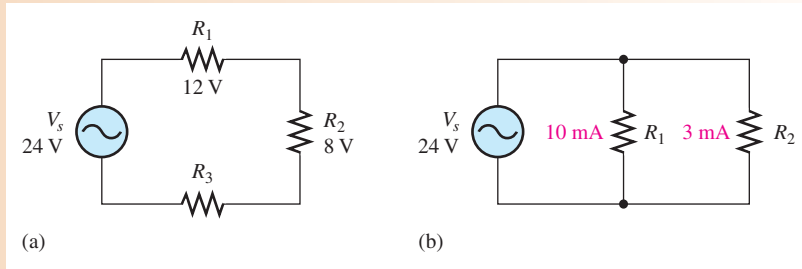

▲ FIGURE 34

Solution **(a)** Use Kirchhoff's voltage law to find V_3.

$$V_s = V_1 + V_2 + V_3$$

$$V_{3(\text{rms})} = V_{s(\text{rms})} - V_{1(\text{rms})} - V_{2(\text{rms})} = 24\text{ V} - 12\text{ V} - 8\text{ V} = 4\text{ V}$$

Convert rms to peak.

$$V_{3(p)} = 1.414V_{3(\text{rms})} = 1.414(4\text{ V}) = \mathbf{5.66\ V}$$

(b) Use Kirchhoff's current law to find I_{tot}.

$$I_{tot(\text{rms})} = I_{1(\text{rms})} + I_{2(\text{rms})} = 10\text{ mA} + 3\text{ mA} = \mathbf{13\ mA}$$

(c) $P_{tot} = V_{\text{rms}}I_{\text{rms}} = (24\text{ V})(13\text{ mA}) = \mathbf{312\ mW}$

Related Problem A series circuit has the following voltage drops: $V_{1(\text{rms})} = 3.50$ V, $V_{2(p)} = 4.25$ V, $V_{3(\text{avg})} = 1.70$ V. Determine the peak-to-peak source voltage.

Superimposed DC and AC Voltages

In many practical circuits, you will find both dc and ac voltages combined. An example of this is in amplifier circuits where ac signal voltages are superimposed on dc operating voltages. Figure 35 shows a dc source and an ac source in series. These two voltages will add algebraically to produce an ac voltage "riding" on a dc level, as measured across the resistor.

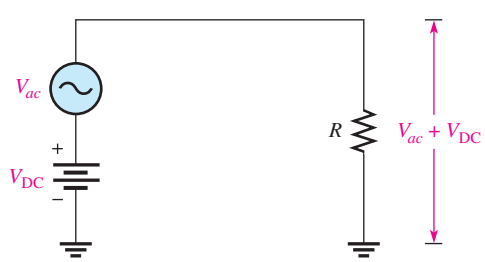

◀ FIGURE 35

Superimposed dc and ac voltages.

If V_{DC} is greater than the peak value of the sinusoidal voltage, the combined ac and dc voltage is a sine wave that never reverses polarity and is therefore nonalternating. That is, the sine wave is riding on a dc level, as shown in Figure 36(a). If V_{DC} is less than the peak value of the sine wave, the sine wave will be negative during a portion of its lower half-cycle, as illustrated in Figure 36(b), and is therefore alternating. In either case, the sine wave will reach a maximum voltage equal to $V_{DC} + V_p$, and it will reach a minimum voltage equal to $V_{DC} - V_p$.

www.EngineeringBooksPdf.com

▶ **FIGURE 36**

Sine waves with dc levels.

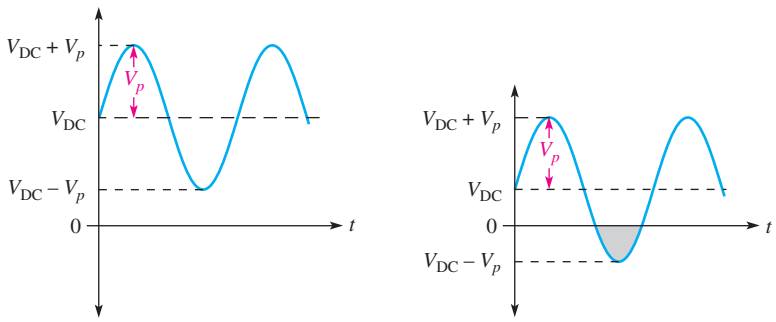

(a) $V_{DC} > V_p$. The sine wave never goes negative.

(b) $V_{DC} < V_p$. The sine wave reverses polarity during a portion of its cycle.

EXAMPLE 12

Determine the maximum and minimum voltages across the resistor in each circuit of Figure 37 and show the resulting waveforms.

▶ **FIGURE 37**

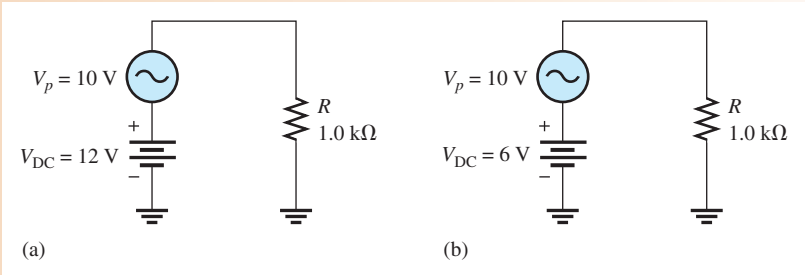

Solution In Figure 37(a), the maximum voltage across R is

$$V_{max} = V_{DC} + V_p = 12\text{ V} + 10\text{ V} = \mathbf{22\ V}$$

The minimum voltage across R is

$$V_{min} = V_{DC} - V_p = 12\text{ V} - 10\text{ V} = \mathbf{2\ V}$$

Therefore, $V_{R(tot)}$ is a nonalternating sine wave that varies from +22 V to +2 V, as shown in Figure 38(a).

▶ **FIGURE 38**

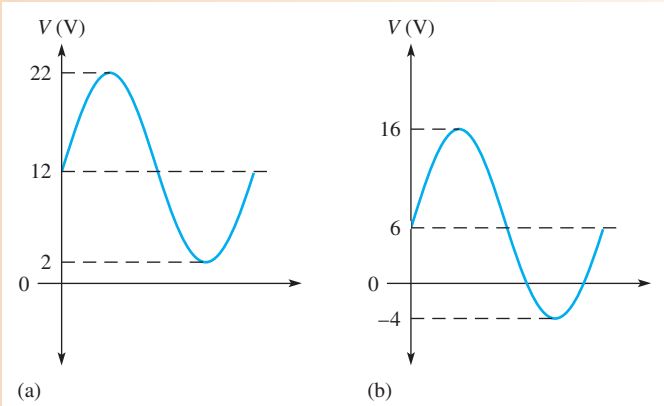

In Figure 37(b), the maximum voltage across R is

$$V_{max} = V_{DC} + V_p = 6\text{ V} + 10\text{ V} = \mathbf{16\ V}$$

www.EngineeringBooksPdf.com

The minimum voltage across R is

$$V_{min} = V_{DC} - V_p = \mathbf{-4\,V}$$

Therefore, $V_{R(tot)}$ is an alternating sine wave that varies from +16 V to −4 V, as shown in Figure 38(b).

Related Problem Explain why the waveform in Figure 38(a) is nonalternating but the waveform in part (b) is considered to be alternating.

SECTION 5 CHECKUP

1. A sinusoidal voltage with a half-cycle average value of 12.5 V is applied to a circuit with a resistance of 330 Ω. What is the peak current in the circuit?
2. The peak voltage drops in a series resistive circuit are 6.2 V, 11.3 V, and 7.8 V. What is the rms value of the source voltage?
3. What is the maximum positive value of the resulting total voltage when a sine wave with $V_p = 5$ V is added to a dc voltage of +2.5 V?
4. Will the resulting voltage in Question 3 alternate polarity?
5. If the dc voltage in Question 3 is −2.5 V, what is the maximum positive value of the resulting total voltage?

6 ALTERNATORS (AC GENERATORS)

An **alternator** is an ac generator that converts energy of motion into electrical energy. Although it is similar to a dc generator, the alternator is more efficient than the dc generator. Alternators are widely used in vehicles, boats, and other applications even when dc is the final output.

After completing this section, you should be able to

- **Describe how an alternator generates electricity**
  - Identify the main parts of an alternator, including the rotor, stator, and slip rings
  - Explain why the output of a rotating-field alternator is taken from the stator
  - Describe the purpose of the slip rings
  - Explain how an alternator can be used to produce dc

Simplified Alternator

Both the dc generator and the alternator, which generates ac voltage, are based on the principle of electromagnetic induction that produces a voltage when there is relative motion between a magnetic field and a conductor. For a simplified alternator, a single rotating loop passes permanent magnetic poles. The natural voltage that is generated by a rotating loop is ac. In an alternator, instead of the split rings used in a dc generator, solid rings called slip rings are used to connect to the rotor, and the output is ac. The simplest form of an alternator has the same appearance as a dc generator except for the slip rings, as shown in Figure 39.

www.EngineeringBooksPdf.com

▶ **FIGURE 39**

A simplified alternator.

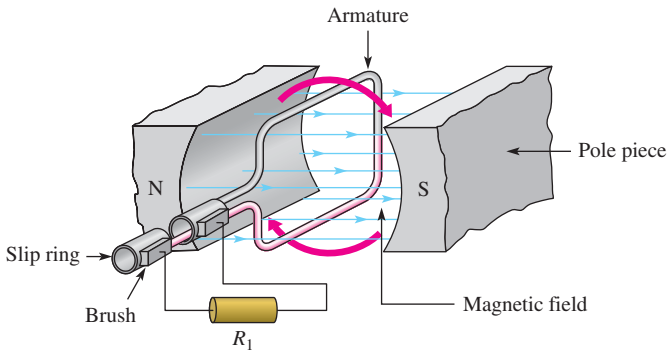

Frequency

In the simplified alternator in Figure 39, each revolution of the loop produces one cycle of a sine wave. The positive and negative peaks occur when the loop cuts the maximum number of flux lines. The rate the loop spins determines the time for one complete cycle and the frequency. If it takes 1/60 of a second to make a revolution, the period of the sine wave is 1/60 of a second and the frequency is 60 Hz. Thus, the faster the loop rotates, the higher the frequency.

Another way of achieving a higher frequency is to use more magnetic poles. When four poles are used instead of two, as shown in Figure 40, the conductor passes under a north and a south pole during one-half a revolution, which doubles the frequency. Alternators can have many more poles, depending on the requirements; some have as many as 100. The number of poles and the speed of the rotor determine the frequency in accordance with the following equation:

Equation 20

$$f = \frac{Ns}{120}$$

where f is the frequency in hertz, N is the number of poles, and s is the rotational speed in revolutions per minute.

▶ **FIGURE 40**

Four poles produce twice the frequency of two poles for the same rotational speed.

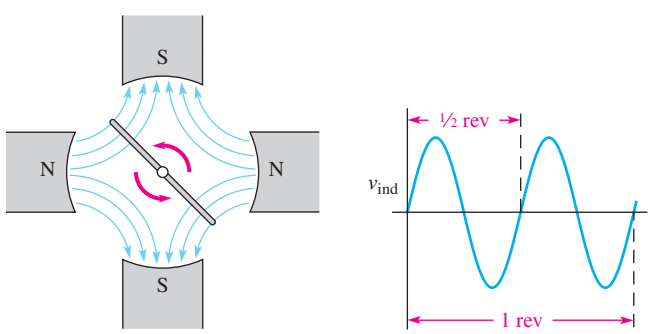

EXAMPLE 13

Assume a large alternator is turned by a turbine at 300 rpm and has 24 poles. What is the output frequency?

Solution

$$f = \frac{Ns}{120} = \frac{(24)(300\text{ rpm})}{120} = \mathbf{60\ Hz}$$

Related Problem At what speed must the rotor move to produce a 50 Hz output?

www.EngineeringBooksPdf.com

Practical Alternators

The single loop in our simplified alternator produces only a tiny voltage. In a practical alternator, hundreds of loops are wound on a magnetic core, which forms the rotor. Practical alternators usually have fixed windings surrounding the rotor instead of permanent magnets. Depending on the type of alternator, these fixed windings can either provide the magnetic field (in which case they are called field windings) or act as the fixed conductors that produce the output (in which case they are the armature windings).

Rotating-Armature Alternators In a rotating-armature alternator, the magnetic field is stationary and is supplied by permanent magnets or electromagnets operated from dc. With electromagnets, field windings are used instead of permanent magnets and provide a fixed magnetic field that interacts with the rotor coils. Power is generated in the rotating assembly and supplied to the load through the slip rings.

In a rotating-armature alternator, the rotor is the component from which power is taken. In addition to hundreds of windings, the practical rotating-armature alternator usually has many pole pairs in the stator that alternate as north and south poles, which serve to increase the output frequency.

Rotating-Field Alternator The rotating-armature alternator is generally limited to low-power applications because all output current must pass through the slip rings and brushes. To avoid this problem, rotating-field alternators take the output from the stator coils and use a rotating magnet, hence the name. Small alternators may have a permanent magnet for a rotor, but most use an electromagnet formed by a wound rotor. A relatively small amount of dc is supplied to the rotor (through the slip rings) to power the electromagnet. As the rotating magnetic field sweeps by the stator windings, power is generated in the stator. The stator is therefore the armature in this case.

Figure 41 shows how a rotating-field alternator can generate three-phase sine waves. (For simplicity, a permanent magnet is shown for the rotor.) AC is generated in each windings as the north pole and the south pole of the rotor alternately sweep by a stator winding. If the north pole generates the positive portion of the sine wave, the south pole will generate the negative portion; thus, one rotation produces a complete sine wave. Each winding has a sine wave output; but because the windings are separated by 120°, the three sine waves are also shifted by 120°. This produces the three-phase output as shown. Most alternators generate three-phase voltage because it is more efficient to produce and is widely used in industry. If the final output is dc, three-phase is easier to convert to dc.

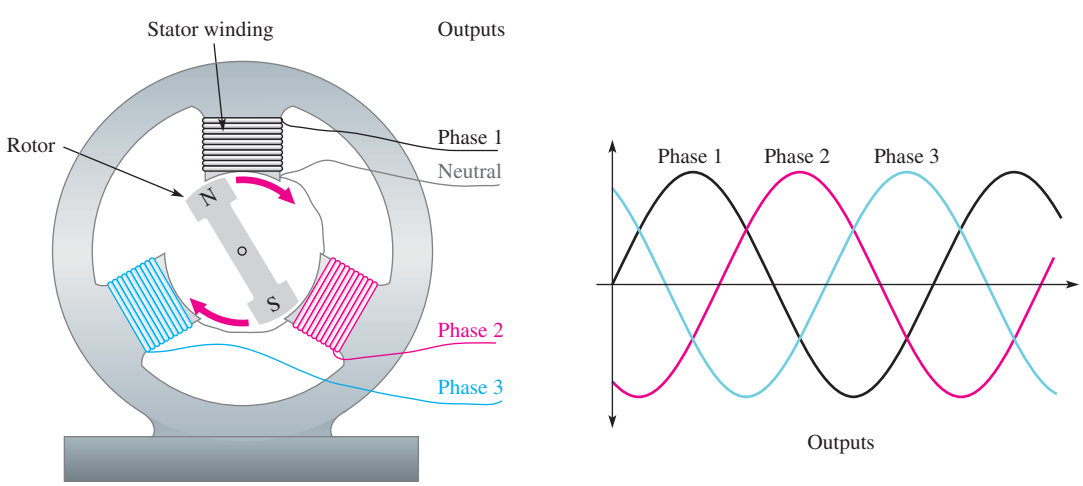

▲ **FIGURE 41**

The rotor shown is a permanent magnet that produces a strong magnetic field. As it sweeps by each stator winding, a sine wave is produced across that winding. The neutral is the reference.

www.EngineeringBooksPdf.com

Rotor Current

A wound rotor offers important control advantages to alternators. A wound rotor enables control over the strength of the magnetic field by controlling the rotor current and hence the output voltage. For wound rotors, dc must be supplied to the rotor. This current is usually supplied through brushes and slip rings, which are made of a continuous ring of material, (unlike a commutator, which is segmented). Because the brushes need to pass only the magnetizing rotor current, they last longer and are smaller than the brushes in an equivalent dc generator, which pass all of the output current.

In wound-rotor alternators, the only current through the brushes and slip rings is the dc that is used to maintain its magnetic field. The dc is usually derived from a small portion of the output current, which is taken from the stator and converted to dc. Large alternators, such as in power stations, may have a separate dc generator, called an **exciter**, to supply current to the field coils. An exciter can respond very fast to changes in output voltage to keep the alternator's output constant, an important consideration in high-power alternators. Some exciters are set up using a stationary field with the armature on the rotating main shaft. The result is a brushless system because the exciter output is on the rotating shaft. A brushless system eliminates the primary maintenance issue with large alternators in cleaning, repairing, and replacing brushes.

An Application

Alternators are used in nearly all modern automobiles, trucks, tractors, and other vehicles. In vehicles, the output is usually three-phase ac taken from stator windings and then converted to dc with diodes that are housed inside the alternator case. (Diodes are solid-state devices that allow current in only one direction.) Current to the rotor is controlled by a voltage regulator, which is also internal to the alternator. The voltage regulator keeps the output voltage relatively constant for engine speed changes or changing loads. Alternators have replaced dc generators in automobiles and most other applications because they are more efficient and more reliable.

Important parts of a small alternator, such as you might find in an automobile are shown in Figure 42. Like a self-excited generator, the rotor has a small residual magnetism to begin with, so an ac voltage is generated in the stator as soon as the rotor starts spinning. This ac is converted to dc by a set of diodes. A portion of the dc is used to provide current to the rotor; the rest is available for the loads. The amount of current

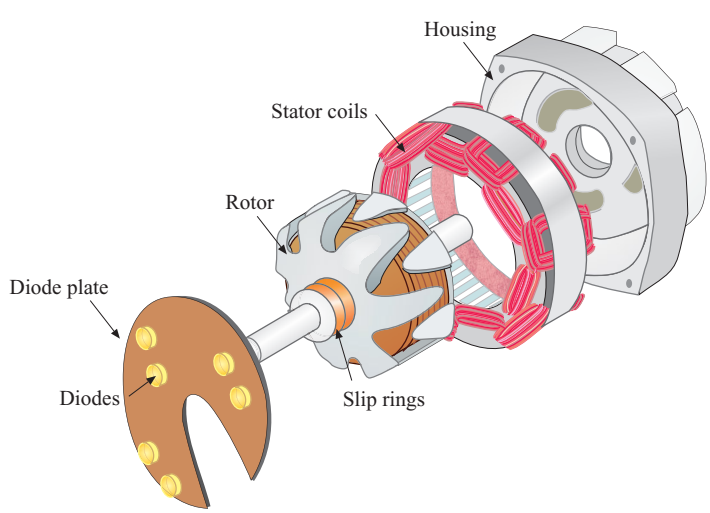

▲ FIGURE 42

Simplified view of a rotor, stator, and diode plate for a small alternator that produces dc.

www.EngineeringBooksPdf.com

required by the rotor is much less than the total current from the alternator, so it can easily provide the required current to the load.

In addition to the fact that three-phase voltage is more efficient to produce, it can produce a stable dc output easily by using two diodes in each winding. Since vehicles require dc for the charging system and loads, the output of the alternator is converted to dc internally using a diode array mounted on a diode plate. Thus, a standard three-phase automotive alternator will normally have six diodes inside to convert the output to dc. (Some alternators have six independent stator coils and twelve diodes.)

SECTION 6 CHECKUP

1. What two factors affect the frequency of an alternator?
2. What is the advantage of taking the output from the stator in a rotating-field alternator?
3. What is an exciter?
4. What is the purpose of the diodes in an automobile alternator?

7 AC MOTORS

Motors are electromagnetic devices that represent the most common loads for ac in power applications. AC motors are used to operate household appliances such as heat pumps, refrigerators, washers, dryers, and vacuums. In industry, ac motors are used in many applications to move and process materials as well as refrigeration and heating units, machining operations, pumps, and much more. In this section, the two major types of ac motors, induction motors and synchronous motors, are introduced.

After completing this section, you should be able to

- **Explain how ac motors convert electrical energy into rotational motion**
  - Cite the main differences between induction and synchronous motors
  - Explain how the magnetic field rotates in an ac motor
  - Explain how an induction motor develops torque

AC Motor Classification

The two major classifications of ac motors are induction motors and synchronous motors. Several considerations determine which of these types are best for any given application. These considerations include the speed and power requirements, voltage rating, load characteristics (such as starting torque required), efficiency requirements, maintenance requirements, and operating environment (such as underwater operation or temperature).

An **induction motor** is so named because a magnetic field *induces* current in the rotor, creating a magnetic field that interacts with the stator field. Normally, there is no electrical connection to the rotor[1], so there is no need for slip rings or brushes, which tend to wear out. The rotor current is caused by electromagnetic induction, which also occurs in transformers, so induction motors are said to work by transformer action.

In a **synchronous motor**, the rotor moves in sync (at the same rate) as the rotating field of the stator. Synchronous motors are used in applications where maintaining constant

[1]*An exception is the wound-rotor motor, which is a type of large induction motor that generally has limited application.*

www.EngineeringBooksPdf.com

speed is important. Synchronous motors are not self-starting and must receive starting torque from an external source or from built-in starting windings. Like alternators, synchronous motors use slip rings and brushes to provide current to the rotor.

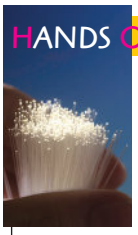

HANDS ON TIP

New motor technology for high power motors will use high temperature superconductors (HTS). The new technology significantly reduces the size and weight of large motors by hundreds of tons. One application is for ships' propulsion motors, which will reduce fuel consumption and free up space on board. A 49,000 HP HTS motor has passed initial tests for the Navy and will be installed in the near future on Navy ships.

Rotating Stator Field

Both synchronous and induction ac motors have a similar arrangement for the stator windings, which allow the magnetic field of the stator to rotate. The rotating stator field is equivalent to moving a magnet in a circle except that the rotating field is produced electrically, with no moving parts.

How can the magnetic field in the stator rotate if the stator itself does not move? The rotating field is created by the changing ac itself. Let's look at a rotating field with a three-phase stator, as shown in Figure 43. Notice that one of the three phases "dominates" at different times. When phase 1 is at 90°, the current in the phase 1 winding is at a maximum and current in the other windings is smaller. Therefore, the stator magnetic field will be oriented toward the phase-1 stator winding. As the phase-1 current declines, the phase-2 current increases, and the field rotates toward the phase-2 winding. The magnetic field will be oriented toward the phase-2 winding when current in it is a maximum. As the phase-2 current declines, the phase-3 current increases, and the field rotates toward the phase-3 winding. The process repeats as the field returns to the phase-1 winding. Thus, the field rotates at a rate determined by the frequency of the applied voltage. With a more detailed analysis, it can be shown that the magnitude of the field is unchanged; only the direction of the field changes.

As the stator field moves, the rotor moves in sync with it in a synchronous motor but lags behind in an induction motor. The rate the stator field moves is called the *synchronous speed* of the motor.

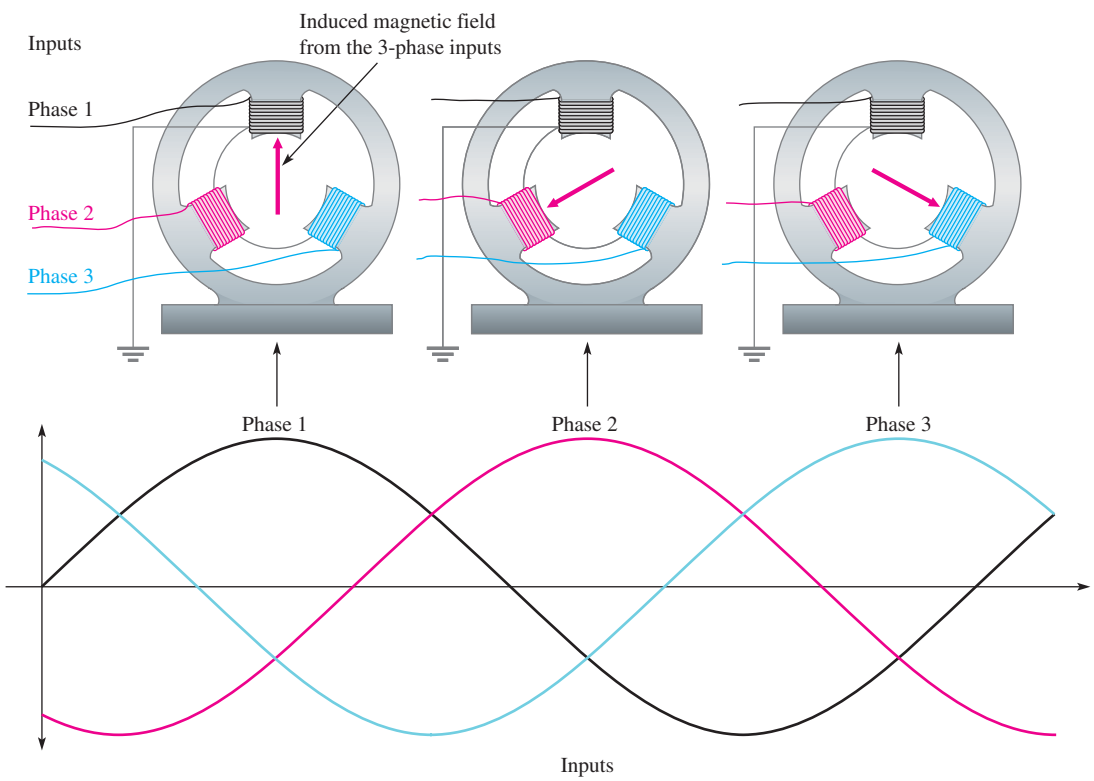

▲ **FIGURE 43**

The application of three phases to the stator produces a net magnetic field as shown by the red arrow. The rotor (not shown) moves in response to this field.

www.EngineeringBooksPdf.com

Induction Motors

The theory of operation is essentially the same for both single-phase and three-phase induction motors. Both types use the rotating field described previously, but the single-phase motor requires starting windings or another method to produce torque for starting the motor, whereas the three-phase motor is self-starting. When starting windings are employed in a single-phase motor, they are removed from the circuit by a mechanical centrifugal switch as the motor speeds up.

The core of the induction motor's rotor consists of an aluminum frame that forms the conductors for the circulating current in the rotor. (Some larger induction motors use copper bars.) The aluminum frame is similar in appearance to the exercise wheel for pet squirrels (common in the early 20th century), so it is aptly called a **squirrel cage**, illustrated in Figure 44. The aluminum squirrel cage itself is the *electrical* path; it is embedded within a ferromagnetic material to provide a low reluctance *magnetic* path through the rotor. In addition, the rotor has cooling fins that may be molded into the same piece of aluminum as the squirrel cage. The entire assembly must be balanced so that it spins easily and without vibrating.

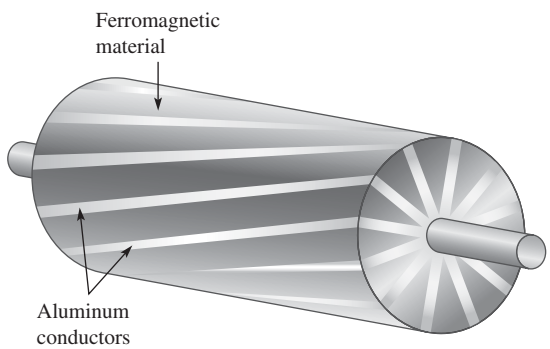

◀ FIGURE 44

Diagram of a squirrel-cage rotor.

Operation of an Induction Motor When the magnetic field from the stator moves across the squirrel cage of the inductor, a current is generated in the squirrel cage. This current creates a magnetic field that reacts with the moving field of the stator, causing the rotor to start turning. The rotor will try to "catch-up" with the moving field, but cannot, in a condition known as slip. **Slip** is defined as the difference between the synchronous speed of the stator and the rotor speed. The rotor can never reach the synchronous speed of the stator field because, if it did, it would not cut any field lines and the torque would drop to zero. Without torque, the rotor could not turn itself.

Initially, before the rotor starts moving, there is no back emf, so the stator current is high. As the rotor speeds up, it generates a back emf that opposes the stator current. As the motor speeds up, the torque produced balances the load and the current is just enough to keep the rotor turning. The running current is significantly lower than the initial start-up current because of the back emf. If the load on the motor is then increased, the motor will slow down and generate less back emf. This increases the current to the motor and increases the torque it can apply to the load. Thus, an induction motor can operate over a range of speeds and torque. Maximum torque occurs when the rotor is spinning at about 75% of the synchronous speed.

Synchronous Motors

Recall that an induction motor develops no torque if it runs at the synchronous speed, so it must run slower than the synchronous speed, depending on the load. The synchronous motor will run at the synchronous speed and still develop the required torque for different loads. The only way to change the speed of a synchronous motor is to change the frequency.

The fact that synchronous motors maintain a constant speed for all load conditions is a major advantage in certain industrial operations and in applications where clock or timing

www.EngineeringBooksPdf.com

requirements are involved (such as a telescope drive motor or a chart recorder). In fact, the first application of synchronous motors was in electric clocks (in 1917).

Another important advantage to large synchronous motors is their efficiency. Although their original cost is higher than a comparable induction motor, the savings in power will often pay for the cost difference in a few years.

Operation of a Synchronous Motor Essentially, the rotating stator field of the synchronous motor is identical to that of an induction motor. The primary difference in the two motors is in the rotor. The induction motor has a rotor that is electrically isolated from a supply, and the synchronous motor uses a magnet to follow the rotating stator field. Small synchronous motors use a permanent magnet for the rotor; larger motors use an electromagnet. When an electromagnet is used, dc is supplied from an external source via slip rings as in case of the alternator.

SECTION 7 CHECKUP

1. What is the main difference between an induction motor and a synchronous motor?
2. What happens to the magnitude of the rotating stator field as it moves?
3. What is the purpose of a squirrel cage?
4. With reference to motors, what does the term *slip* mean?

8 NONSINUSOIDAL WAVEFORMS

Sine waves are important in electronics, but they are not the only type of ac or time-varying waveform. Two other major types of waveforms are the pulse waveform and the triangular waveform.

After completing this section, you should be able to

- **Identify the characteristics of basic nonsinusoidal waveforms**
  - Discuss the properties of a pulse waveform
  - Define *duty cycle*
  - Discuss the properties of triangular and sawtooth waveforms
  - Discuss the harmonic content of a waveform

Pulse Waveforms

Basically, a **pulse** can be described as a very rapid transition **(leading edge)** from one voltage or current level **(baseline)** to another level; and then, after an interval of time, a very rapid transition **(trailing edge)** back to the original baseline level. The transitions in level are called *steps.* An ideal pulse consists of two opposite-going steps of equal amplitude. When the leading or trailing edge is positive-going, it is called a **rising edge**. When the leading or trailing edge is negative-going, it is called a **falling edge**.

Figure 45(a) shows an ideal positive-going pulse consisting of two equal but opposite instantaneous steps separated by an interval of time called the **pulse width**. Figure 45(b) shows an ideal negative-going pulse. The height of the pulse measured from the baseline is its voltage (or current) amplitude. Commonly, analysis is simplified by treating all pulses as ideal (composed of instantaneous steps and perfectly rectangular in shape).

www.EngineeringBooksPdf.com

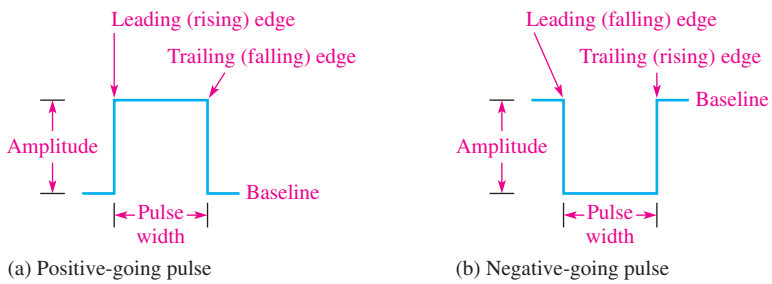

(a) Positive-going pulse (b) Negative-going pulse

◀ **FIGURE 45**

Ideal pulses.

Actual pulses, however, are never ideal. Pulses cannot change from one level to another instantaneously. Time is always required for a transition (step), as illustrated in Figure 46(a). As you can see, there is an interval of time during which the pulse is rising from its lower value to its higher value. This interval is called the *rise time*, t_r.

Rise time is the time required for the pulse to go from 10% of its amplitude to 90% of its amplitude.

The interval of time during which the pulse is falling from its higher value to its lower value is called the *fall time*, t_f.

Fall time is the time required for the pulse to go from 90% of its amplitude to 10% of its amplitude.

Pulse width (t_W) also requires a precise definition for the nonideal pulse because the leading and trailing edges are not vertical.

Pulse width is the time between the point on the leading edge where the value is 50% of the amplitude and the point on the trailing edge where the value is 50% of the amplitude.

Pulse width is shown in Figure 46(b).

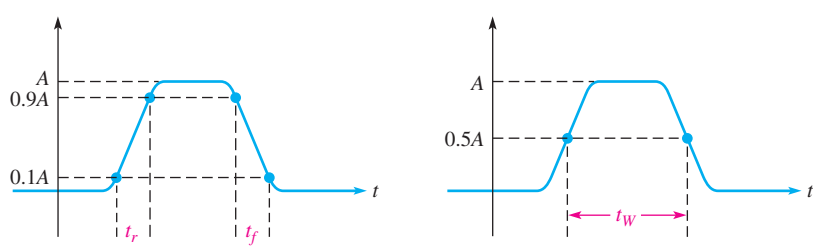

(a) Rise and fall times (b) Pulse width

◀ **FIGURE 46**

Nonideal pulse.

Repetitive Pulses Any waveform that repeats itself at fixed intervals is **periodic**. Figure 47 shows some examples of periodic pulse waveforms. Notice that in each case, the

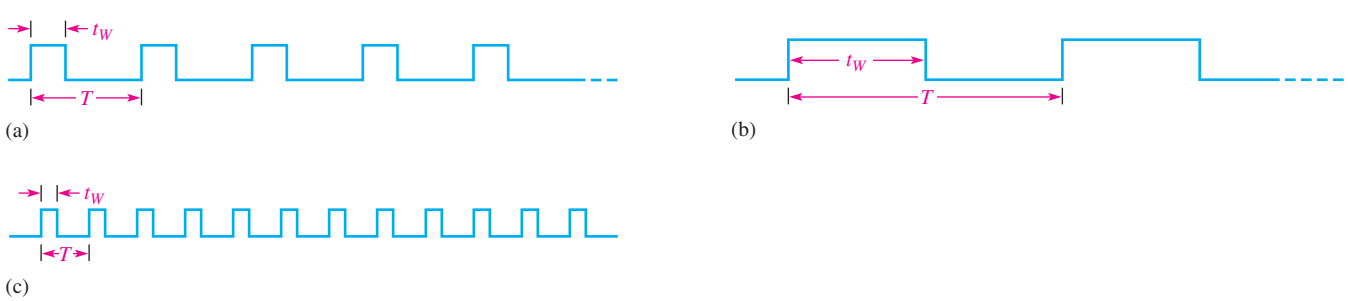

▲ **FIGURE 47**

Repetitive pulse waveforms.

www.EngineeringBooksPdf.com

pulses repeat at regular intervals. The rate at which the pulses repeat is the **pulse repetition frequency**, which is the fundamental frequency of the waveform. The frequency can be expressed in hertz or in pulses per second. The time from one pulse to the corresponding point on the next pulse is the period (T). The relationship between frequency and period is the same as with the sine wave, $f = 1/T$.

An important characteristic of periodic pulse waveforms is the duty cycle.

The duty cycle is the ratio of the pulse width (t_W) to the period (T) and is usually expressed as a percentage.

Equation 21

$$\textbf{Percent duty cycle} = \left(\frac{t_W}{T}\right)100\%$$

EXAMPLE 14

Determine the period, frequency, and duty cycle for the pulse waveform in Figure 48.

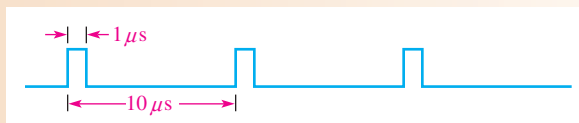

▲ FIGURE 48

Solution As indicated in Figure 48, the period is

$$T = \mathbf{10\ \mu s}$$

Use Equations 1 and 21 to determine the frequency and duty cycle.

$$f = \frac{1}{T} = \frac{1}{10\ \mu s} = \mathbf{100\ kHz}$$

$$\text{Percent duty cycle} = \left(\frac{t_W}{T}\right)100\% = \left(\frac{1\ \mu s}{10\ \mu s}\right)100\% = \mathbf{10\%}$$

Related Problem A certain pulse waveform has a frequency of 200 kHz and a pulse width of 0.25 μs. Determine the duty cycle expressed as a percentage.

Square Waves A square wave is a pulse waveform with a duty cycle of 50%. Thus, the pulse width is equal to one-half of the period. A square wave is shown in Figure 49.

▶ FIGURE 49

Square wave.

The Average Value of a Pulse Waveform The **average value** of a pulse waveform is equal to its baseline value plus the product of its duty cycle and its amplitude. The lower level of a positive-going waveform or the upper level of a negative-going waveform is taken as the baseline. The formula for average voltage is as follows:

Equation 22

$$V_{avg} = \textbf{baseline} + \textbf{(duty cycle)(amplitude)}$$

The following example illustrates the calculation of the average voltage of pulse waveforms.

www.EngineeringBooksPdf.com

EXAMPLE 15 Determine the average voltage of each of the positive-going waveforms in Figure 50.

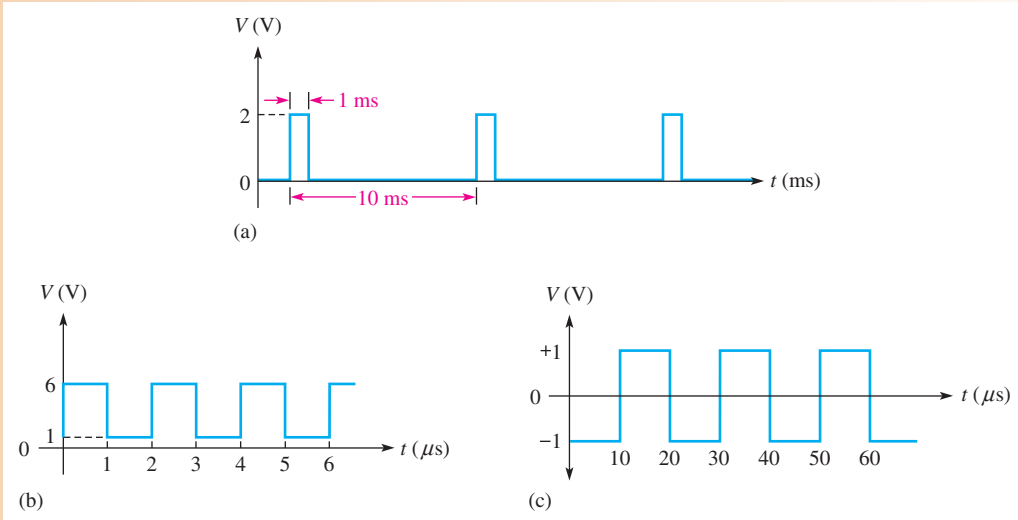

▲ **FIGURE 50**

Solution In Figure 50(a), the baseline is at 0 V, the amplitude is 2 V, and the duty cycle is 10%. The average voltage is

$$V_{avg} = \text{baseline} + (\text{duty cycle})(\text{amplitude})$$
$$= 0\text{ V} + (0.1)(2\text{ V}) = \mathbf{0.2\ V}$$

The waveform in Figure 50(b) has a baseline of +1 V, an amplitude of 5 V, and a duty cycle of 50%. The average voltage is

$$V_{avg} = \text{baseline} + (\text{duty cycle})(\text{amplitude})$$
$$= 1\text{ V} + (0.5)(5\text{ V}) = 1\text{ V} + 2.5\text{ V} = \mathbf{3.5\ V}$$

The waveform in Figure 50(c) is a square wave with a baseline of −1 V and an amplitude of 2 V. The duty cycle is 50%. The average voltage is

$$V_{avg} = \text{baseline} + (\text{duty cycle})(\text{amplitude})$$
$$= -1\text{ V} + (0.5)(2\text{ V}) = -1\text{ V} + 1\text{ V} = \mathbf{0\ V}$$

This is an alternating square wave, and, like an alternating sine wave, it has an average voltage of zero over a full cycle.

Related Problem If the baseline of the waveform in Figure 50(a) is shifted to +1 V, what is the average voltage?

Triangular and Sawtooth Waveforms

Triangular and sawtooth waveforms are formed by voltage or current ramps. A **ramp** is a linear increase or decrease in the voltage or current. Figure 51 shows both positive- and negative-going ramps. In part (a), the ramp has a positive slope; in part (b), the ramp has a negative slope. The slope of a voltage ramp is $\pm V/t$ and the slope of a current ramp is $\pm I/t$.

www.EngineeringBooksPdf.com

▶ **FIGURE 51**

Voltage ramps.

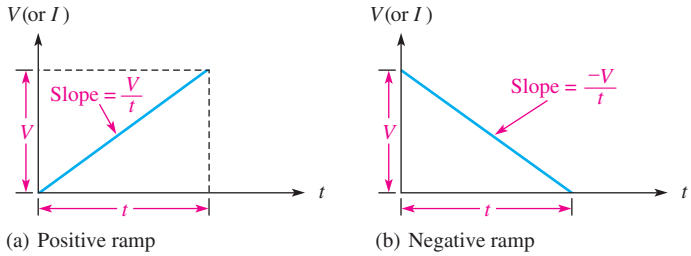

EXAMPLE 16

What are the slopes of the voltage ramps in Figure 52?

▶ **FIGURE 52**

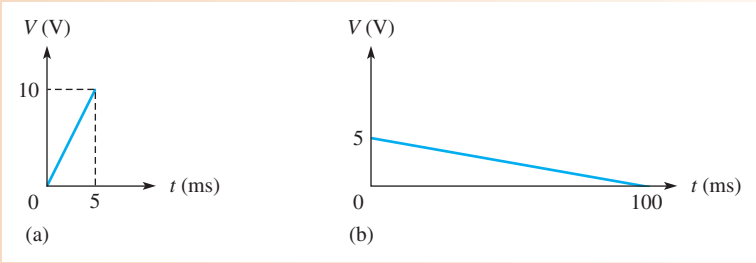

Solution In Figure 52(a), the voltage increases from 0 V to +10 V in 5 ms. Thus, $V = 10$ V and $t = 5$ ms. The slope is

$$\frac{V}{t} = \frac{10\text{ V}}{5\text{ ms}} = \mathbf{2\ V/ms}$$

In Figure 52(b), the voltage decreases from +5 V to 0 V in 100 ms. Thus, $V = -5$ V and $t = 100$ ms. The slope is

$$\frac{V}{t} = \frac{-5\text{ V}}{100\text{ ms}} = \mathbf{-0.05\ V/ms}$$

Related Problem A certain voltage ramp has a slope of +12 V/μs. If the ramp starts at zero, what is the voltage at 0.01 ms?

Triangular Waveforms Figure 53 shows that a **triangular waveform** is composed of positive-going and negative-going ramps having equal slopes. The period of this waveform can be measured from one peak to the next corresponding peak, as illustrated. This particular triangular waveform is alternating and has an average value of zero.

▶ **FIGURE 53**

Alternating triangular waveform.

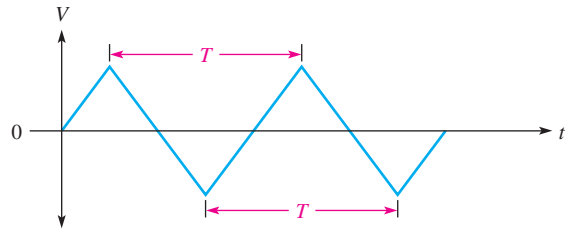

Figure 54 depicts a triangular waveform with a nonzero average value. The frequency for triangular waves is determined in the same way as for sine waves, that is, $f = 1/T$.

www.EngineeringBooksPdf.com

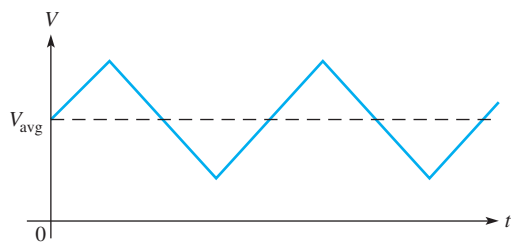

◀ FIGURE 54

Nonalternating triangular waveform.

Sawtooth Waveforms The **sawtooth waveform** is actually a special case of the triangular waveform consisting of two ramps, one of much longer duration than the other. Sawtooth waveforms are used in many electronic systems. For example, a sawtooth waveform is used in automatic test equipment, control systems, and certain types of displays, including analog oscilloscopes.

Figure 55 is an example of a sawtooth waveform. Notice that it consists of a positive-going ramp of relatively long duration, followed by a negative-going ramp of relatively short duration.

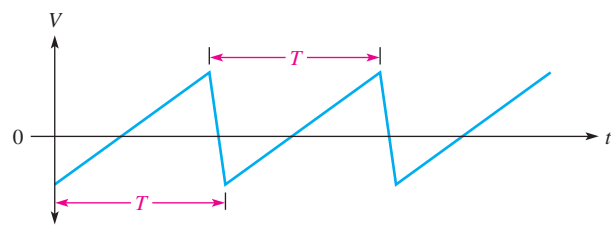

◀ FIGURE 55

Alternating sawtooth waveform.

Harmonics

A repetitive nonsinusoidal waveform contains sinusoidal waveforms with a fundamental frequency and harmonic frequencies. The **fundamental frequency** is the repetition rate of the waveform, and the **harmonics** are higher-frequency sine waves that are multiples of the fundamental.

Odd Harmonics *Odd harmonics* are frequencies that are odd multiples of the fundamental frequency of a waveform. For example, a 1 kHz square wave consists of a fundamental of 1 kHz and odd harmonics of 3 kHz, 5 kHz, 7 kHz, and so on. The 3 kHz frequency in this case is the third harmonic; the 5 kHz frequency is the fifth harmonic; and so on.

Even Harmonics *Even harmonics* are frequencies that are even multiples of the fundamental frequency. For example, if a certain wave has a fundamental of 200 Hz, the second harmonic is 400 Hz, the fourth harmonic is 800 Hz, the sixth harmonic is 1200 Hz, and so on. These are even harmonics.

Composite Waveform Any variation from a pure sine wave produces harmonics. A nonsinusoidal wave is a composite of the fundamental and the harmonics. Some types of waveforms have only odd harmonics, some have only even harmonics, and some contain both. The shape of the wave is determined by its harmonic content. Generally, only the fundamental frequency and the first few harmonics are of significant importance in determining the wave shape.

A square wave is an example of a waveform that consists of a fundamental frequency and only odd harmonics. When the instantaneous values of the fundamental and each odd harmonic are added algebraically at each point, the resulting curve will have the shape of a square wave, as illustrated in Figure 56. In part (a), the fundamental and the third harmonic produce a wave shape that begins to resemble a square wave. In part (b), the fundamental,

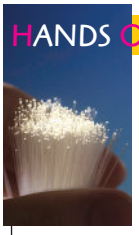

HANDS ON TIP

The frequency response of an oscilloscope limits the accuracy with which waveforms can be accurately displayed. To view pulse waveforms, the frequency response must be high enough for all significant harmonics of the waveform. For example, a 100 MHz oscilloscope distorts a 100 MHz pulse waveform because the third, fifth, and higher harmonics are greatly attenuated.

www.EngineeringBooksPdf.com

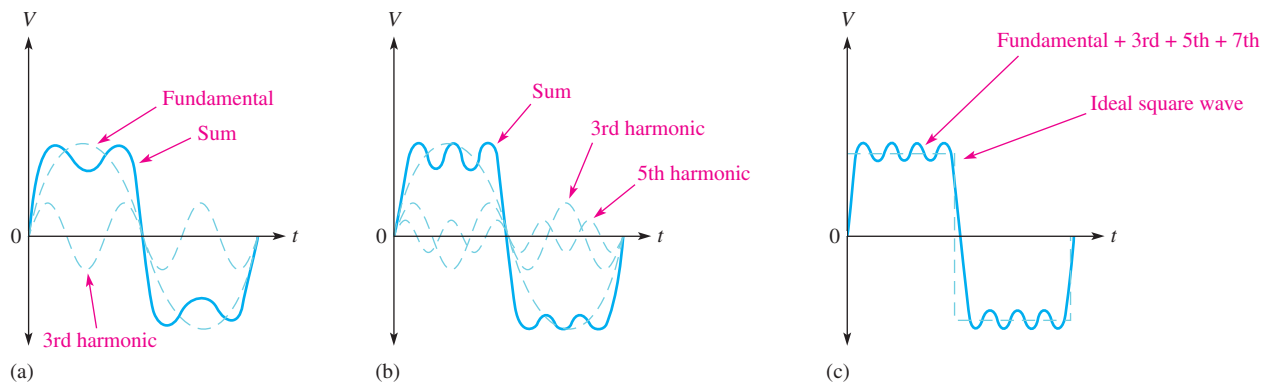

▲ **FIGURE 56**

Odd harmonics combine to produce a square wave.

third, and fifth harmonics produce a closer resemblance. When the seventh harmonic is included, as in part (c), the resulting wave shape becomes even more like a square wave. As more harmonics are included, a square wave is approached.

SECTION 8 CHECKUP

1. Define the following parameters:
   (a) rise time (b) fall time (c) pulse width
2. In a certain repetitive positive-going pulse waveform, the pulses are 200 μs wide and occur once every millisecond. What is the frequency of this waveform?
3. Determine the duty cycle, amplitude, and average value of the waveform in Figure 57(a).

▶ **FIGURE 57**

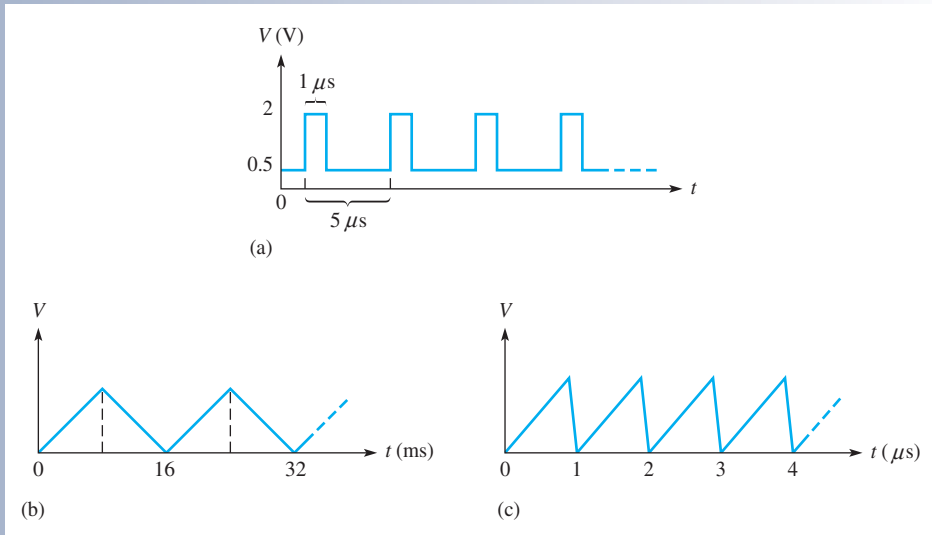

4. What is the period of the triangular wave in Figure 57(b)?
5. What is the frequency of the sawtooth wave in Figure 57(c)?
6. Define *fundamental frequency.*
7. What is the second harmonic of a fundamental frequency of 1 kHz?
8. What is the fundamental frequency of a square wave having a period of 10 μs?

www.EngineeringBooksPdf.com

9 THE OSCILLOSCOPE

The oscilloscope, or (scope for short) is a widely used and versatile test instrument for observing and measuring waveforms.

After completing this section, you should be able to

- **Use an oscilloscope to measure waveforms**
  - Recognize common oscilloscope controls
  - Measure the amplitude of a waveform
  - Measure the period and frequency of a waveform

The **oscilloscope** is basically a graph-displaying device that traces a graph of a measured electrical signal on its screen. In most applications, the graph shows how signals change over time. The vertical axis of the display screen represents voltage and the horizontal axis represents time. You can measure amplitude, period, and frequency of a signal using an oscilloscope. Also, you can determine the pulse width, duty cycle, rise time, and fall time of a pulse waveform. Most scopes can display at least two signals on the screen at one time, enabling you to observe their time relationship. Typical oscilloscopes are shown in Figure 58.

▲ FIGURE 58

Typical oscilloscopes. Copyright © Tektronix. Reproduced by permission.

Two basic types of oscilloscopes, analog and digital, can be used to view digital waveforms. The analog scope works by applying the measured waveform directly to control the up and down motion of the electron beam in the cathode-ray tube (CRT) as it sweeps across the screen. As a result, the beam traces out the waveform pattern on the screen. The digital scope converts the measured waveform to digital information by a sampling process in an analog-to-digital converter (ADC). The digital information is then used to reconstruct the waveform on the screen.

The digital scope is more widely used than the analog scope. However, either type can be used in many applications; each has characteristics that make it more suitable for certain situations. An analog scope displays waveforms as they occur in "real time." Digital scopes are useful for measuring transient pulses that may occur randomly or only once. Also, because information about the measured waveform can be stored in a digital scope, it may be viewed at some later time, printed out, or thoroughly analyzed by a computer or other means.

www.EngineeringBooksPdf.com

Basic Operation of Analog Oscilloscopes

To measure a voltage, a probe must be connected from the scope to the point in a circuit at which the voltage is present. Generally, a ×10 probe is used that reduces (attenuates) the signal amplitude by ten. The signal goes through the probe into the vertical circuits where it is either further attenuated (reduced) or amplified depending on the actual amplitude and on where you set the vertical control of the scope. The vertical circuits then drive the vertical deflection plates of the CRT. Also, the signal goes to the trigger circuits that trigger the horizontal circuits to initiate repetitive horizontal sweeps of the electron beam across the screen using a sawtooth waveform. There are many sweeps per second so that the beam appears to form a solid line across the screen in the shape of the waveform. This basic operation is illustrated in Figure 59.

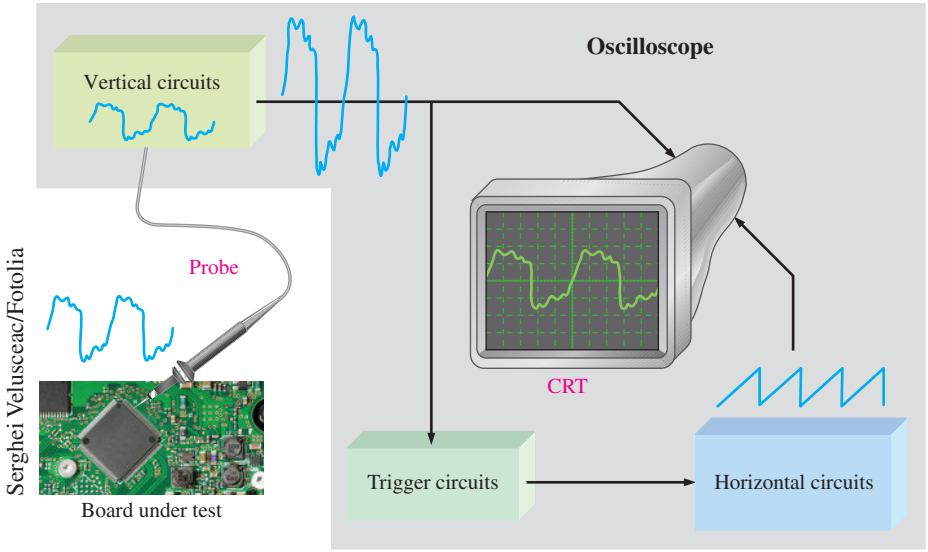

▲ FIGURE 59

Block diagram of an analog oscilloscope.

Basic Operation of Digital Oscilloscopes

Some parts of a digital scope are similar to the analog scope. However, the digital scope is more complex than an analog scope and typically has an LCD screen rather than a CRT. Rather than displaying a waveform as it occurs, the digital scope first acquires the measured analog waveform and converts it to a digital format using an analog-to-digital converter (ADC). The digital data is stored and processed. The data then goes to the reconstruction and display circuits for display in its original analog form. Figure 60 shows a block diagram for a digital oscilloscope.

Oscilloscope Controls

A front panel view of a typical dual-channel oscilloscope is shown in Figure 61. Instruments vary depending on model and manufacturer, but most have certain common features. For example, the two vertical sections contain a Position control, a channel menu button, and a Volts/Div control. The horizontal section contains a Sec/Div control.

Some of the main controls are now discussed. Refer to the user manual for complete details of your particular scope.

Vertical Controls In the Vertical section of the scope in Figure 61, there are identical controls for each of the two channels (CH1 and CH2). The position control lets you move

www.EngineeringBooksPdf.com

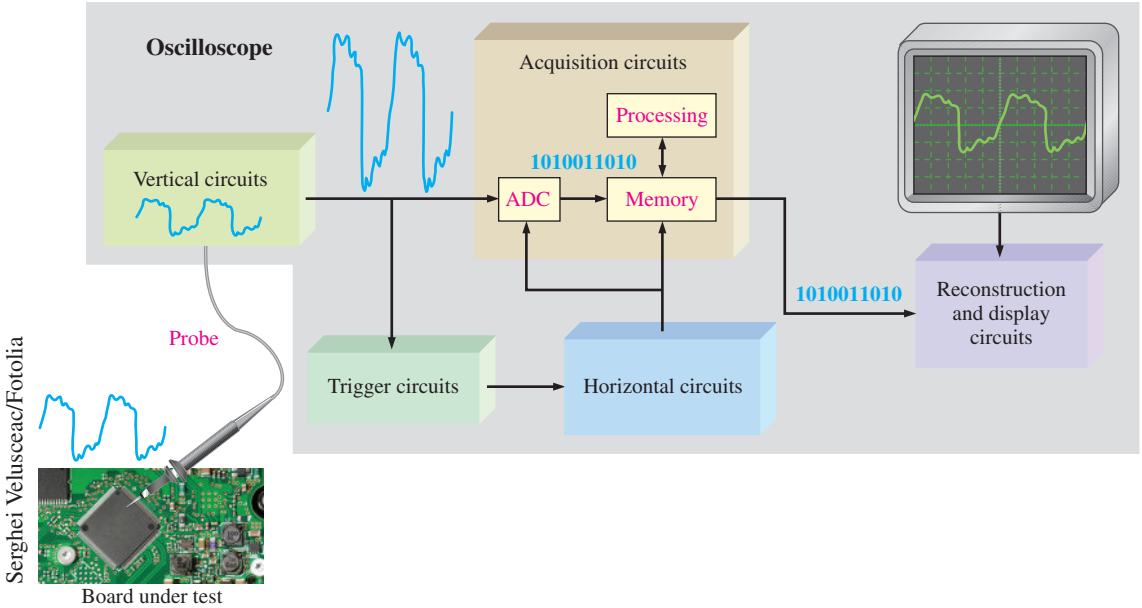

▲ FIGURE 60

Block diagram of a digital oscilloscope.

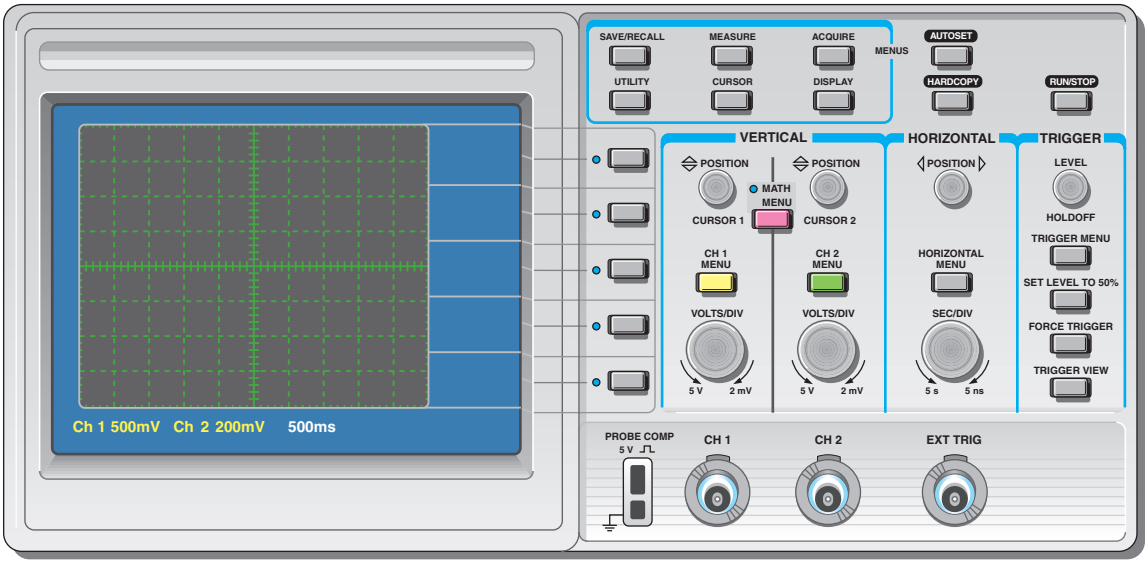

▲ FIGURE 61

A typical dual-channel oscilloscope. Numbers below screen indicate the values for each division on the vertical (voltage) and horizontal (time) scales and can be varied using the vertical and horizontal controls on the scope.

a displayed waveform up or down vertically on the screen. The Menu button provides for the selection of several items that appear on the screen, such as the coupling modes (ac, dc, or ground) and coarse or fine adjustment for the Volts/Div. The Volts/Div control adjusts the number of volts represented by each vertical division on the screen. The Volts/Div setting for each channel is displayed on the bottom of the screen. The Math Menu button provides a selection of operations that can be performed on the input waveforms, such as subtraction and addition of signals.

www.EngineeringBooksPdf.com

Horizontal Controls In the Horizontal section, the controls apply to both channels. The Position control lets you move a displayed waveform left to right horizontally on the screen. The Horizontal Menu button provides for the selection of several items that appear on the screen such as the main time base, expanded view of a portion of a waveform, and other parameters. The Sec/Div control adjusts the time represented by each horizontal division or main time base. The Sec/Div setting is displayed at the bottom of the screen.

Trigger Controls In the Trigger section, the Level control determines the point on the triggering waveform where triggering occurs to initiate the sweep to display input waveforms. The Trigger Menu button provides for the selection of several items that appear on the screen including edge or slope triggering, trigger source, trigger mode, and other parameters. There is also an input for an external trigger signal.

Triggering stabilizes a waveform on the screen and properly triggers on a pulse that occurs only one time or randomly. Also it allows you to observe time delays between two waveforms. Figure 62 compares a triggered to an untriggered signal. The untriggered signal tends to drift across the screen producing what appears to be multiple waveforms.

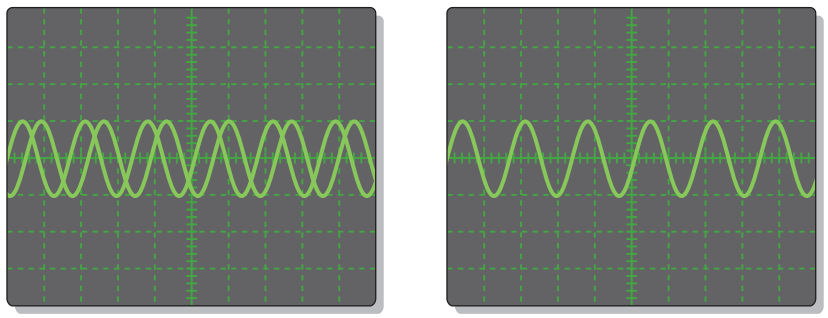

(a) Untriggered waveform display (b) Triggered waveform display

▲ **FIGURE 62**

Comparison of an untriggered and a triggered waveform on an oscilloscope.

Coupling a Signal into the Scope Coupling is the method used to connect a signal voltage to be measured into the oscilloscope. The DC and AC coupling modes are selected from the Vertical menu. DC coupling allows a waveform including its dc component to be displayed. AC coupling blocks the dc component of a signal so that you see the waveform centered at 0 V. The Ground mode allows you to connect the channel input to ground to see where the 0 V reference is on the screen. Figure 63 illustrates the result of DC and AC coupling using a sinusoidal waveform that has a dc component.

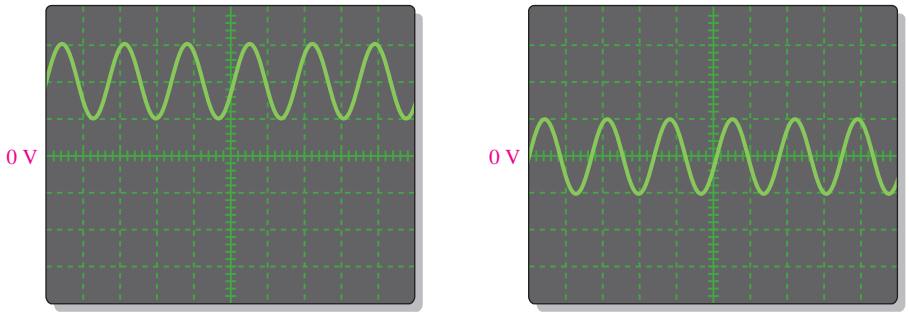

(a) DC coupled waveform (b) AC coupled waveform

▲ **FIGURE 63**

Displays of the same waveform having a dc component.

www.EngineeringBooksPdf.com

The voltage probe, shown in Figure 64, is used for connecting a signal to the scope. Since all instruments tend to affect the circuit being measured due to loading, most scope probes provide an attenuation network to minimize loading effects. Probes that attenuate the measured signal by a factor of 10 are called ×10 (times ten) probes. Probes with no attenuation are called ×1 (times one) probes. Most oscilloscopes automatically adjust the calibration for the attenuation of the type of probe being used. For most measurements, the ×10 probe should be used. However, if you are measuring very small signals, a ×1 may be the best choice.

◀ FIGURE 64

An oscilloscope voltage probe. Copyright © Tektronix, Inc. Reproduced by permission.

The probe has an adjustment that allows you to compensate for the input capacitance of the scope. Most scopes have a probe compensation output that provides a calibrated square wave for probe compensation. Before making a measurement, you should make sure that the probe is properly compensated to eliminate any distortion introduced. Typically, there is a screw or other means of adjusting compensation on a probe. Figure 65 shows scope waveforms for three probe conditions: properly compensated, undercompensated, and overcompensated. If the waveform appears either over- or undercompensated, adjust the probe until the properly compensated square wave is achieved.

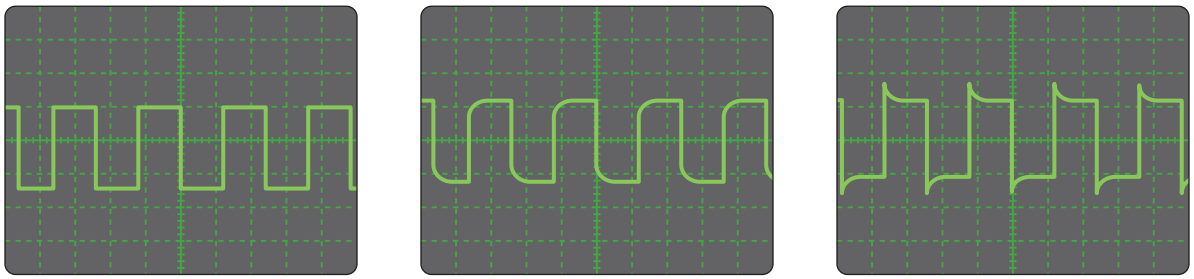

Properly compensated | Undercompensated | Overcompensated

▲ FIGURE 65

Probe compensation conditions.

EXAMPLE 17

Determine the peak-to-peak value and period of each sine wave in Figure 66 from the digital scope screen displays and the settings for Volts/Div and Sec/Div, which are indicated under the screens. Sine waves are centered vertically on the screens.

www.EngineeringBooksPdf.com

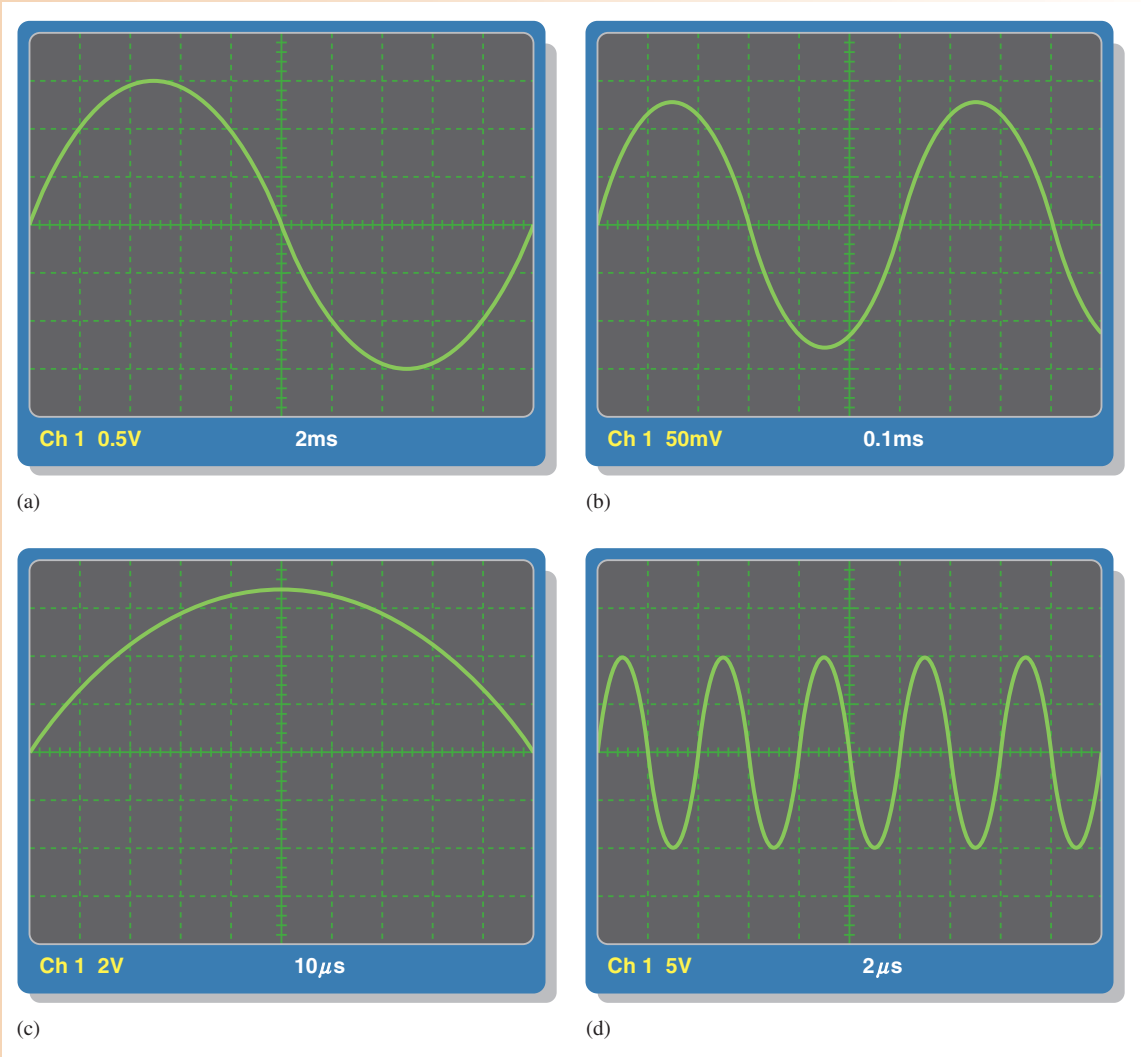

▲ FIGURE 66

Solution Looking at the vertical scale in Figure 66(a),

$$V_{pp} = 6 \text{ divisions} \times 0.5 \text{ V/division} = \mathbf{3.0\ V}$$

From the horizontal scale (one cycle covers ten divisions),

$$T = 10 \text{ divisions} \times 2 \text{ ms/division} = \mathbf{20\ ms}$$

Looking at the vertical scale in Figure 66(b),

$$V_{pp} = 5 \text{ divisions} \times 50 \text{ mV/division} = \mathbf{250\ mV}$$

From the horizontal scale (one cycle covers six divisions),

$$T = 6 \text{ divisions} \times 0.1 \text{ ms/division} = 0.6 \text{ ms} = \mathbf{600\ \mu s}$$

Looking at the vertical scale in Figure 66(c),

$$V_{pp} = 6.8 \text{ divisions} \times 2 \text{ V/division} = \mathbf{13.6\ V}$$

From the horizontal scale (one-half cycle covers ten divisions),

$$T = 20 \text{ divisions} \times 10\ \mu\text{s/division} = \mathbf{200\ \mu s}$$

www.EngineeringBooksPdf.com

Looking at the vertical scale in Figure 66(d),

$$V_{pp} = 4 \text{ divisions} \times 5 \text{ V/division} = \mathbf{20\ V}$$

From the horizontal scale (one cycle covers two divisions),

$$T = 2 \text{ divisions} \times 2\ \mu\text{s/division} = \mathbf{4\ \mu s}$$

Related Problem Determine the rms value and the frequency for each waveform displayed in Figure 66.

SECTION 9 CHECKUP

1. What is the main difference between a digital and an analog oscilloscope?
2. Is voltage read horizontally or vertically on a scope screen?
3. What does the Volts/Div control on an oscilloscope do?
4. What does the Sec/Div control on an oscilloscope do?
5. When should you use a ×10 probe for making a voltage measurement?

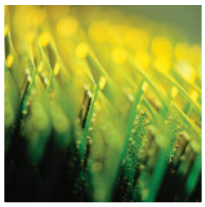

Application Assignment

PUTTING YOUR KNOWLEDGE TO WORK

Assume you are assigned to check out a particular function generator that produces sine wave, triangular wave, and pulse outputs. For each type of output, you will analyze oscilloscope measurements of the minimum and maximum frequencies and amplitudes, the maximum positive and negative dc offsets, and the minimum and maximum duty cycles for the pulse waveform. You will record the measurements in a logical format.

Step 1: Familiarization with the Function Generator

The function generator is shown in Figure 67. Each control is marked by a circled number and a description follows.

1. *Power on/off switch* Press this push-button switch to turn the power on. Press again to release the switch and turn the power off.
2. *Function switches* Press one of the switches to select either a sinusoidal, triangular, sawtooth, or pulse output.

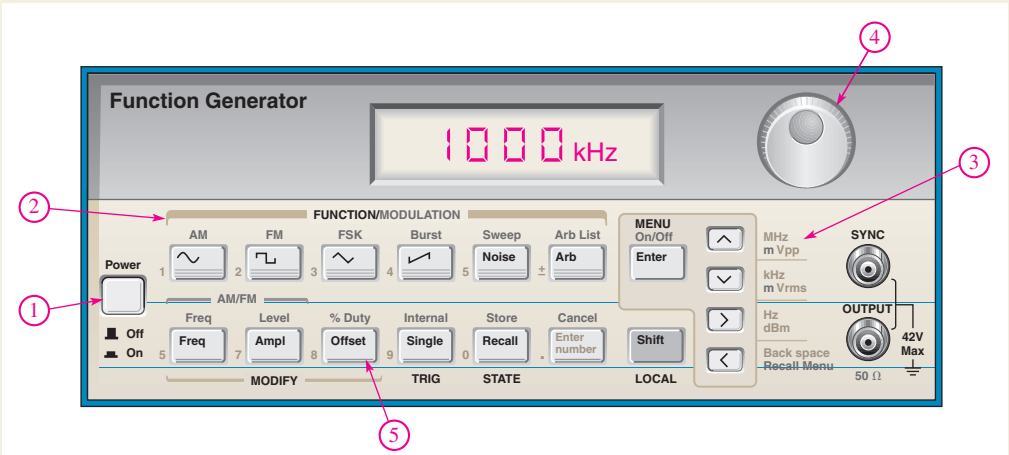

▲ FIGURE 67

Function generator.

www.EngineeringBooksPdf.com

3. *Frequency/amplitude range switches* These menu-selectable switches are used in conjunction with the adjustment control (4).
4. *Frequency adjustment control* Turn this dial to set a specific frequency in the range selected.
5. *DC offset/duty cycle control* This control adjusts the dc level of the ac output. You can add a positive or a negative dc level to a waveform and adjust the duty cycle of the pulse waveform output. The sine wave or triangular wave outputs are not affected by this control.

Step 2: Measuring the Sinusoidal Output

The output of the function generator is connected to the channel 1 (CH1) input of the scope and the sinusoidal output function is selected. The scope is set to dc coupling.

In Figure 68(a), assume the amplitude and frequency of the function generator are set to their minimum values. Measure and record these values. Express amplitude in both peak and rms.

In Figure 68(b), assume the amplitude and frequency are set to their maximum values. Measure and record these values. Express amplitude in both peak and rms.

Step 3: Measuring the DC Offset

Assume the sinusoidal amplitude and frequency of the function generator are set to arbitrary values for dc offset measurement. The scope is set to dc coupling.

In Figure 69(a), the dc offset of the function generator is adjusted to the maximum positive value. Measure and record this value.

In Figure 69(b), the dc offset is adjusted to the maximum negative value. Measure and record this value.

Step 4: Measuring the Triangular Output

The triangular output of the function generator is selected. The scope is set to ac coupling.

In Figure 70(a), the amplitude and frequency of the function generator are set to the minimum values. Measure and record these values.

In Figure 70(b), the amplitude and frequency are set to the maximum values. Measure and record these values.

Step 5: Measuring the Pulse Output

The pulse output of the function generator is selected. The scope is set to dc coupling.

▶ FIGURE 68

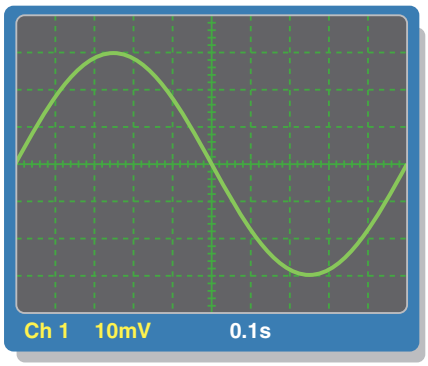

(a) The horizontal axis is 0 V.

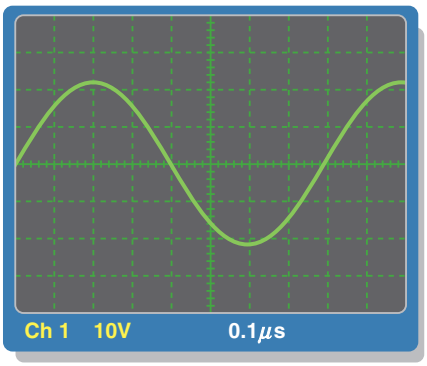

(b) The horizontal axis is 0 V.

▶ FIGURE 69

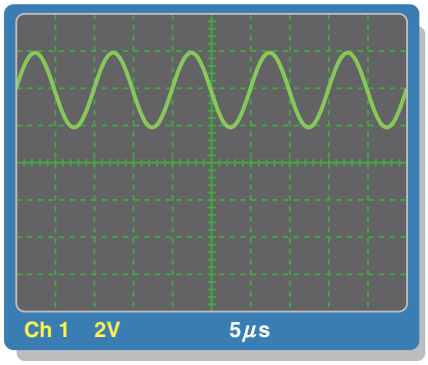

(a) The horizontal axis is 0 V.

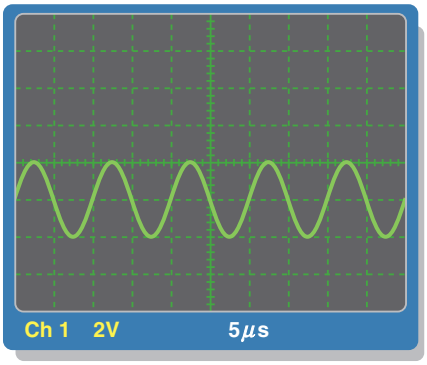

(b) The horizontal axis is 0 V.

www.EngineeringBooksPdf.com

▶ FIGURE 70

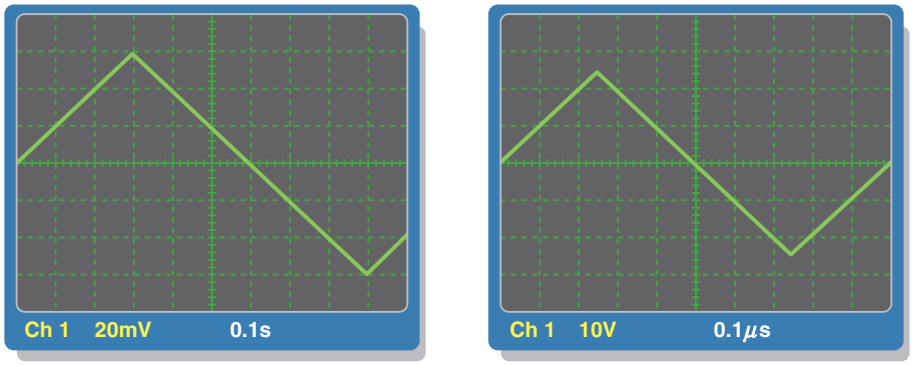

(a) The horizontal axis is 0 V. (b) The horizontal axis is 0 V.

▶ FIGURE 71

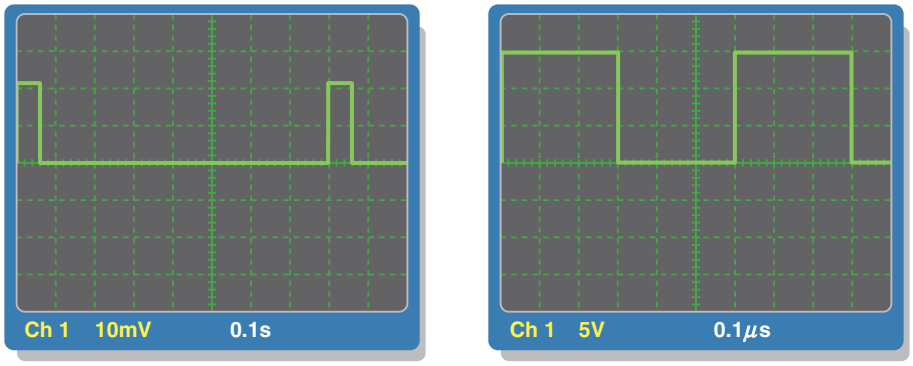

(a) The horizontal axis is 0 V. (b) The horizontal axis is 0 V.

In Figure 71(a), the amplitude from the baseline and frequency of the function generator are set to the minimum values. The duty cycle is adjusted to minimum. Measure and record these values. Express the duty cycle as a percentage.

In Figure 71(b), the amplitude and frequency are set to the maximum values. The duty cycle is adjusted to maximum. Measure and record these values. Express the duty cycle as a percentage.

Multisim Analysis

Open your Multisim software. Place an oscilloscope and a function generator on the screen connected as shown in Figure 72. Double-click each instrument to see the detailed controls in an expanded view. Select the sine wave function; set the amplitude to 100 mV_{pp} and the frequency to 1 kHz. Verify the values by oscilloscope measurement. Repeat for 1 V and 50 kHz and for 10 V and 1 MHz.

Review

1. Generally, what setting of the Sec/Div control on a scope should be used to obtain the most accurate measurement of frequency?
2. Generally, what setting of the Volts/Div control on a scope should be used to obtain the most accurate measurement of amplitude?
3. Explain the purpose of each coupling mode setting (AC, DC, and GND) for each channel of an oscilloscope.

▶ FIGURE 72

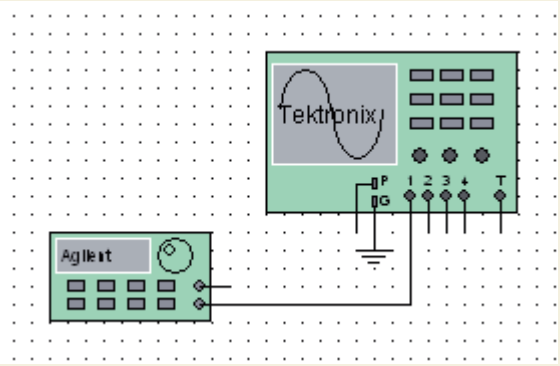

www.EngineeringBooksPdf.com

SUMMARY

- The sine wave is a time-varying, periodic waveform.
- The sine wave is the fundamental type of alternating current (ac) and alternating voltage.
- Alternating current changes direction in response to changes in the polarity of the source voltage.
- One cycle of an alternating sine wave consists of a positive alternation and a negative alternation.
- The average value of a sine wave determined over one half-cycle is 0.637 times the peak value. The average value of a sine wave determined over a full cycle is zero.
- A full cycle of a sine wave is 360°, or 2π radians. A half-cycle is 180°, or π radian. A quarter-cycle is 90° or $\pi/2$ radians.
- Phase angle is the difference in degrees (or radians) between two sine waves or between a sine wave and a reference wave.
- The angular position of a phasor represents the angle of a sine wave, and the length of the phasor represents the amplitude.
- Voltages and currents must all be expressed with consistent units when you apply Ohm's or Kirchhoff's laws in ac circuits.
- Power in a resistive ac circuit is determined using rms voltage and/or current values.
- Alternators (ac generators) produce power when there is relative motion between a magnetic field and a conductor.
- Most alternators take the output from the stator. The rotor provides a moving magnetic field.
- Two major types of ac motors are induction motors and synchronous motors.
- Induction motors have a rotor that turns in response to a rotating field from the stator.
- Synchronous motors move at a constant speed in sync with the field of the stator.
- A pulse consists of a transition from a baseline level to an amplitude level, followed by a transition back to the baseline level.
- A triangular or sawtooth wave consists of positive-going and negative-going ramps.
- Harmonic frequencies are odd or even multiples of the repetition rate (or fundamental frequency) of a nonsinusoidal waveform.
- Conversions of sine wave values are summarized in Table 2.

TABLE 2

TO CHANGE FROM	TO	MULTIPLY BY
Peak	rms	0.707
Peak	Peak-to-peak	2
Peak	Average	0.637
rms	Peak	1.414
Peak-to-peak	Peak	0.5
Average	Peak	1.57

KEY TERMS

Amplitude The maximum value of a voltage or current.

Cycle One repetition of a periodic waveform.

Degree The unit of angular measure corresponding to 1/360 of a complete revolution.

Duty cycle A characteristic of a pulse waveform that indicates the percentage of time that a pulse is present during a cycle; the ratio of pulse width to period expressed as either a fraction or as a percentage.

Fall time (t_f) The time interval required for a pulse to change from 90% to 10% of its amplitude.

Frequency (f) A measure of the rate of change of a periodic function; the number of cycles completed in 1 s. The unit of frequency is the hertz.

Function generator An instrument that produces more than one type of waveform.

www.EngineeringBooksPdf.com

Fundamental frequency The repetition rate of a waveform.

Harmonics The frequencies contained in a composite waveform, which are integer multiples of the pulse repetition frequency (fundamental).

Hertz (Hz) The unit of frequency. One hertz equals one cycle per second.

Induction motor An ac motor that achieves excitation to the rotor by transformer action.

Instantaneous value The voltage or current value of a waveform at a given instant in time.

Oscillator An electronic circuit that produces a time-varying signal without an external input signal using positive feedback.

Oscilloscope A measurement instrument that displays signal waveforms on a screen.

Peak-to-peak value The voltage or current value of a waveform measured from its minimum to its maximum points.

Peak value The voltage or current value of a waveform at its maximum positive or negative points.

Period (T) The time interval of one complete cycle of a periodic waveform.

Periodic Characterized by a repetition at fixed-time intervals.

Phase The relative angular displacement of a time-varying waveform in terms of its occurrence with respect to a reference.

Pulse A type of waveform that consists of two equal and opposite steps in voltage or current separated by a time interval.

Pulse width (t_W) The time interval between the opposite steps of an ideal pulse. For a nonideal pulse, the time between the 50% points on the leading and trailing edges.

Radian A unit of angular measurement. There are 2π radians in one complete 360° revolution. One radian equals 57.3°.

Ramp A type of waveform characterized by a linear increase or decrease in voltage or current.

Rise time (t_r) The time interval required for a pulse to change from 10% to 90% of its amplitude.

rms value The value of a sinusoidal voltage that indicates its heating effect, also known as the effective value. It is equal to 0.707 times the peak value. *rms* stands for root mean square.

Sine wave A type of waveform that follows a cyclic sinusoidal pattern defined by the formula $v = A \sin \theta$.

Slip The difference between the synchronous speed of the stator field and the rotor speed in an induction motor.

Squirrel cage An aluminum frame within the rotor of an induction motor that forms the electrical conductors for a rotating current.

Synchronous motor An ac motor in which the rotor moves at the same rate as the rotating magnetic field of the stator.

Waveform The pattern of variations of a voltage or current showing how the quantity changes with time.

FORMULAS

1	$f = \dfrac{1}{T}$	Frequency
2	$T = \dfrac{1}{f}$	Period
3	$V_{pp} = 2V_p$	Peak-to-peak voltage (sine wave)
4	$I_{pp} = 2I_p$	Peak to peak current (sine wave)
5	$V_{\text{rms}} = 0.707V_p$	Root-mean-square voltage (sine wave)
6	$I_{\text{rms}} = 0.707I_p$	Root-mean-square current (sine wave)
7	$V_p = 1.414V_{\text{rms}}$	Peak voltage (sine wave)
8	$I_p = 1.414I_{\text{rms}}$	Peak current (sine wave)

www.EngineeringBooksPdf.com

9	$V_{pp} = 2.828V_{rms}$	Peak-to-peak voltage (sine wave)
10	$I_{pp} = 2.828I_{rms}$	Peak-to-peak current (sine wave)
11	$V_{avg} = 0.637V_p$	Half-cycle average voltage (sine wave)
12	$I_{avg} = 0.637I_p$	Half-cycle average current (sine wave)
13	$\text{rad} = \left(\frac{\pi\,\text{rad}}{180°}\right) \times \text{degrees}$	Degrees to radian conversion
14	$\text{degrees} = \left(\frac{180°}{\pi\,\text{rad}}\right) \times \text{rad}$	Radian to degrees conversion
15	$y = A \sin\theta$	General formula for a sine wave
16	$v = V_p \sin\theta$	Sinusoidal voltage
17	$i = I_p \sin\theta$	Sinusoidal current
18	$y = A \sin(\theta - \phi)$	Lagging sine wave
19	$y = A \sin(\theta + \phi)$	Leading sine wave
20	$f = \frac{Ns}{120}$	Output frequency of an alternator
21	$\text{Percent duty cycle} = \left(\frac{t_W}{T}\right)100\%$	Duty cycle
22	$V_{avg} = \text{baseline} + (\text{duty cycle})(\text{amplitude})$	Average voltage of pulse waveform

TRUE/FALSE QUIZ

Answers are at the end of the chapter.

1. The period of a 60 Hz sine wave is 16.7 ms.
2. The rms and average value of a sine wave are the same.
3. A sine wave with a peak value of 10 V has the same heating effect as a 10 V dc source.
4. The peak value of a sine wave is the same as its amplitude.
5. The number of radians in 360° is 2π.
6. In a three-phase electrical system, the phases are separated by 60°.
7. The purpose of an exciter is to supply dc rotor current to an alternator.
8. In an automotive alternator, the output current is taken from the rotor through slip rings.
9. A maintenance issue with induction motors is brush replacement.
10. A synchronous motor can be used when constant speed is required.

SELF-TEST

Answers are at the end of the chapter.

1. The difference between alternating current (ac) and direct current (dc) is
   (a) ac changes value and dc does not **(b)** ac changes direction and dc does not
   (c) both (a) and (b) **(d)** neither (a) nor (b)
2. During each cycle, a sine wave reaches a peak value
   (a) one time **(b)** two times **(c)** four times
   (d) a number of times depending on the frequency
3. A sine wave with a frequency of 12 kHz is changing at a faster rate than a sine wave with a frequency of
   (a) 20 kHz **(b)** 15,000 Hz **(c)** 10,000 Hz **(d)** 1.25 MHz
4. A sine wave with a period of 2 ms is changing at a faster rate than a sine wave with a period of
   (a) 1 ms **(b)** 0.0025 s **(c)** 1.5 ms **(d)** 1000 μs

www.EngineeringBooksPdf.com

5. When a sine wave has a frequency of 60 Hz, in 10 s it goes through
   (a) 6 cycles **(b)** 10 cycles **(c)** 1/16 cycle **(d)** 600 cycles
6. If the peak value of a sine wave is 10 V, the peak-to-peak value is
   (a) 20 V **(b)** 5 V **(c)** 100 V **(d)** none of these
7. If the peak value of a sine wave is 20 V, the rms value is
   (a) 14.14 V **(b)** 6.37 V **(c)** 7.07 V **(d)** 0.707 V
8. The average value of a 10 V peak sine wave over one complete cycle is
   (a) 0 V **(b)** 6.37 V **(c)** 7.07 V **(d)** 5 V
9. The average half-cycle value of a sine wave with a 20 V peak is
   (a) 0 V **(b)** 6.37 V **(c)** 12.74 V **(d)** 14.14 V
10. One sine wave has a positive-going zero crossing at 10° and another sine wave has a positive-going zero crossing at 45°. The phase angle between the two waveforms is
    (a) 55° **(b)** 35° **(c)** 0° **(d)** none of these
11. The instantaneous value of a 15 A peak sine wave at a point 32° from its positive-going zero crossing is
    (a) 7.95 A **(b)** 7.5 A **(c)** 2.13 A **(d)** 7.95 V
12. If the rms current through a 10 kΩ resistor is 5 mA, the rms voltage drop across the resistor is
    (a) 70.7 V **(b)** 7.07 V **(c)** 5 V **(d)** 50 V
13. Two series resistors are connected to an ac source. If there is 6.5 V rms across one resistor and 3.2 V rms across the other, the peak source voltage is
    (a) 9.7 V **(b)** 9.19 V **(c)** 13.72 V **(d)** 4.53 V
14. An advantage of a three-phase induction motor is that it
    (a) maintains constant speed for any load **(b)** does not require starting windings
    (c) has a wound rotor **(d)** all of the above
15. The difference in the synchronous speed of the stator field and the rotor speed of a motor is called
    (a) differential speed **(b)** loading **(c)** lag **(d)** slip
16. A 10 kHz pulse waveform consists of pulses that are 10 μs wide. Its duty cycle is
    (a) 100% **(b)** 10% **(c)** 1% **(d)** not determinable
17. The duty cycle of a square wave
    (a) varies with the frequency **(b)** varies with the pulse width
    (c) both (a) and (b) **(d)** is 50%

TROUBLESHOOTING: SYMPTOM AND CAUSE

The purpose of these exercises is to help develop thought processes essential to troubleshooting. Answers are at the end of the chapter.

Determine the cause for each set of symptoms. Refer to Figure 73.

▶ FIGURE 73

The ac meters indicate the correct readings for this circuit.

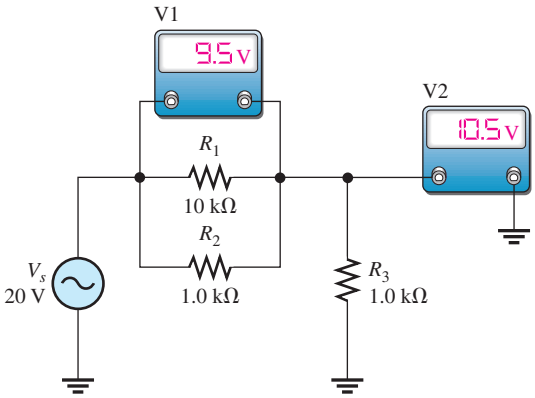

www.EngineeringBooksPdf.com

1. *Symptom:* The voltmeter 1 reading is 0 V, and the voltmeter 2 reading is 20 V.
   Cause:
   (a) R_1 is open. **(b)** R_2 is open. **(c)** R_3 is open.
2. *Symptom:* The voltmeter 1 reading is 20 V, and the voltmeter 2 reading is 0 V.
   Cause:
   (a) R_1 is open. **(b)** R_2 is shorted. **(c)** R_3 is shorted.
3. *Symptom:* The voltmeter 1 reading is 18.2 V, and the voltmeter 2 reading is 1.8 V.
   Cause:
   (a) R_1 is open. **(b)** R_2 is open. **(c)** R_1 is shorted.
4. *Symptom:* Both voltmeter readings are 10 V.
   Cause:
   (a) R_1 is open. **(b)** R_1 is shorted. **(c)** R_2 is open.
5. *Symptom:* The voltmeter 1 reading is 16.7 V, and the voltmeter 2 reading is 3.3 V.
   Cause:
   (a) R_1 is shorted. **(b)** R_2 is 10 kΩ instead of 1 kΩ. **(c)** R_3 is 10 kΩ instead of 1 kΩ.

PROBLEMS

Answers to odd-numbered problems are at the end of the chapter.

BASIC PROBLEMS

SECTION 1 The Sinusoidal Waveform

1. Calculate the frequency for each of the following periods:
   (a) 1 s **(b)** 0.2 s **(c)** 50 ms **(d)** 1 ms **(e)** 500 μs **(f)** 10 μs
2. Calculate the period for each of the following frequencies:
   (a) 1 Hz **(b)** 60 Hz **(c)** 500 Hz **(d)** 1 kHz **(e)** 200 kHz **(f)** 5 MHz
3. A sine wave goes through 5 cycles in 10 μs. What is its period?
4. A sine wave has a frequency of 50 kHz. How many cycles does it complete in 10 ms?
5. How long does it take a 10 kHz sine wave to complete 100 cycles?

SECTION 2 Voltage and Current Values of Sine Waves

6. A sine wave has a peak value of 12 V. Determine the following voltage values:
   (a) rms **(b)** peak-to-peak **(c)** half-cycle average
7. A sinusoidal current has an rms value of 5 mA. Determine the following current values:
   (a) peak **(b)** half-cycle average **(c)** peak-to-peak
8. For the sine wave in Figure 74, determine the peak, peak-to-peak, rms, and half-cycle average values.
9. If each horizontal division in Figure 74 is 1 ms, determine the instantaneous voltage value at
   (a) 1 ms **(b)** 2 ms **(c)** 4 ms **(d)** 7 ms

▶ FIGURE 74

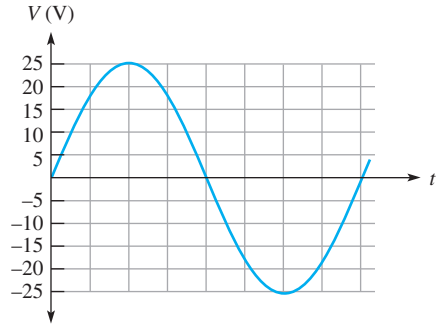

www.EngineeringBooksPdf.com

SECTION 3 Angular Measurement of a Sine Wave

10. In Figure 74, what is the instantaneous voltage at

(a) 45° **(b)** 90° **(c)** 180°

11. Sine wave *A* has a positive-going zero crossing at 30° from a reference. Sine wave *B* has a positive-going zero crossing at 45° from the same reference. Determine the phase angle between the two signals. Which signal leads?

12. One sine wave has a positive peak at 75° and another has a positive peak at 100°. How much is each sine wave shifted in phase from the 0° reference? What is the phase angle between them?

13. Draw two sine waves as follows: Sine wave *A* is the reference, and sine wave *B* lags *A* by 90°. Both have equal amplitudes.

14. Convert the following angular values from degrees to radians:

(a) 30° **(b)** 45° **(c)** 78° **(d)** 135° **(e)** 200° **(f)** 300°

15. Convert the following angular values from radians to degrees:

(a) $\pi/8$ **(b)** $\pi/3$ **(c)** $\pi/2$ **(d)** $3\pi/5$ **(e)** $6\pi/5$ **(f)** 1.8π

SECTION 4 The Sine Wave Formula

16. A certain sine wave has a positive-going zero crossing at 0° and an rms value of 20 V. Calculate its instantaneous value at each of the following angles:

(a) 15° **(b)** 33° **(c)** 50° **(d)** 110°
(e) 70° **(f)** 145° **(g)** 250° **(h)** 325°

17. For a particular 0° reference sinusoidal current, the peak value is 100 mA. Determine the instantaneous value at each of the following points:

(a) 35° **(b)** 95° **(c)** 190° **(d)** 215° **(e)** 275° **(f)** 360°

18. For a 0° reference sine wave with an rms value of 6.37 V, determine its instantaneous value at each of the following points:

(a) $\pi/8$ rad **(b)** $\pi/4$ rad **(c)** $\pi/2$ rad **(d)** $3\pi/4$ rad
(e) π rad **(f)** $3\pi/2$ rad **(g)** 2π rad

19. Sine wave *A* lags sine wave *B* by 30°. Both have peak values of 15 V. Sine wave *A* is the reference with a positive-going crossing at 0°. Determine the instantaneous value of sine wave *B* at 30°, 45°, 90°, 180°, 200°, and 300°.

20. Repeat Problem 19 for the case when sine wave *A* leads sine wave *B* by 30°.

SECTION 5 Analysis of AC Circuits

21. A sinusoidal voltage is applied to the resistive circuit in Figure 75. Determine the following:

(a) I_{rms} **(b)** I_{avg} **(c)** I_p **(d)** I_{pp} **(e)** i at the positive peak

22. Find the half-cycle average values of the voltages across R_1 and R_2 in Figure 76. All values shown are rms.

23. Determine the rms voltage across R_3 in Figure 77.

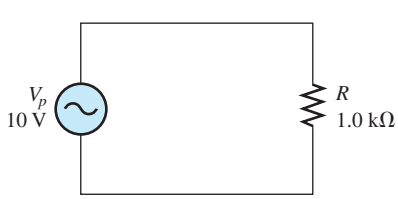

▲ FIGURE 75

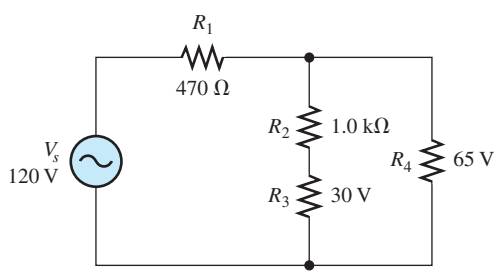

▲ FIGURE 76

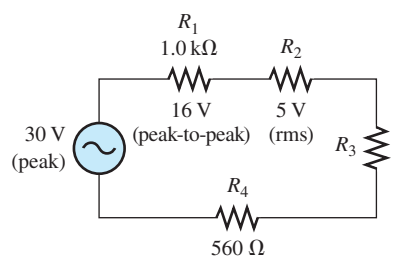

▲ FIGURE 77

www.EngineeringBooksPdf.com

24. A sine wave with an rms value of 10.6 V is riding on a dc level of 24 V. What are the maximum and minimum values of the resulting waveform?

25. How much dc voltage must be added to a 3 V rms sine wave in order to make the resulting voltage nonalternating (no negative values)?

26. A 6 V peak sine wave is riding on a dc voltage of 8 V. If the dc voltage is lowered to 5 V, how far negative will the sine wave go?

SECTION 6 Alternators (AC Generators)

27. The conductive wire loop on the rotor of a simple two-pole, single-phase generator rotates at a rate of 250 rps. What is the frequency of the induced output voltage?

28. A certain four-pole generator has a speed of rotation of 3600 rpm. What is the frequency of the voltage produced by this generator?

29. At what speed of rotation must a four-pole generator be operated to produce a 400 Hz sinusoidal voltage?

30. A common frequency for alternators on aircraft is 400 Hz. How many poles does a 400 Hz alternator have if the speed of rotation is 3000 rpm?

SECTION 7 AC Motors

31. What is the main difference between a one-phase induction motor and a three-phase induction motor?

32. Explain how the field in a three-phase motor rotates if there are no moving parts to the field coils.

SECTION 8 Nonsinusoidal Waveforms

33. From the graph in Figure 78, determine the approximate values of t_r, t_f, t_W, and amplitude.

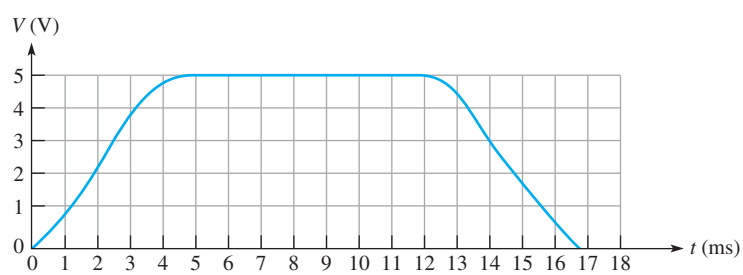

▲ FIGURE 78

34. Determine the duty cycle for each pulse waveform in Figure 79.

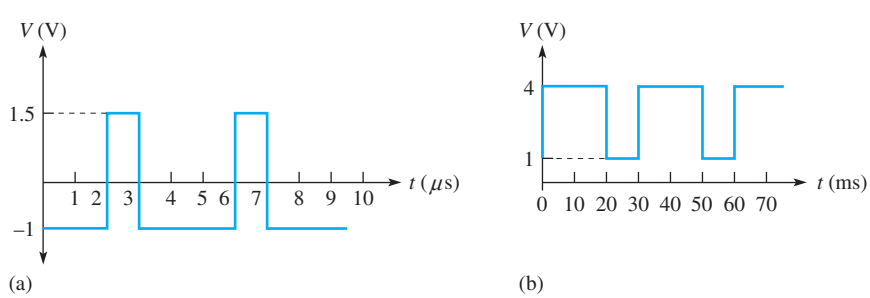

▲ FIGURE 79

www.EngineeringBooksPdf.com

35. Find the average value of each positive-going pulse waveform in Figure 79.

36. What is the frequency of each waveform in Figure 79.

37. What is the frequency of each sawtooth waveform in Figure 80?

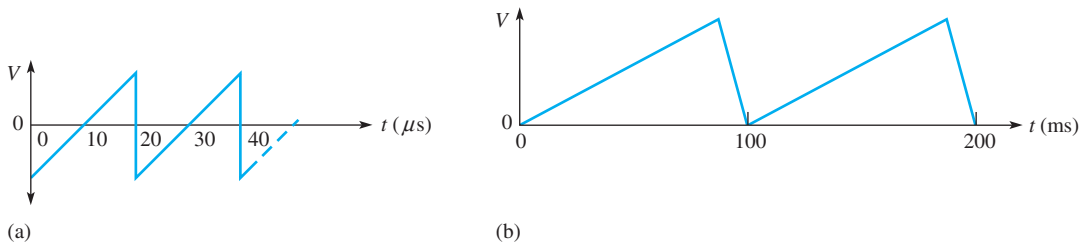

▲ FIGURE 80

38. A square wave has a period of 40 μs. List the first six odd harmonics.

39. What is the fundamental frequency of the square wave mentioned in Problem 38?

SECTION 9 The Oscilloscope

40. Determine the peak value and the period of the sine wave displayed on the scope screen in Figure 81. The horizontal axis is 0 V.

▶ FIGURE 81

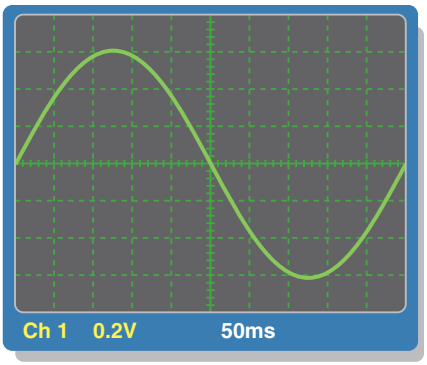

41. Determine the rms value and the frequency of the sine wave displayed on the scope screen in Figure 81.

42. Determine the rms value and the frequency of the sine wave displayed on the scope screen in Figure 82. The horizontal axis is 0 V.

▶ FIGURE 82

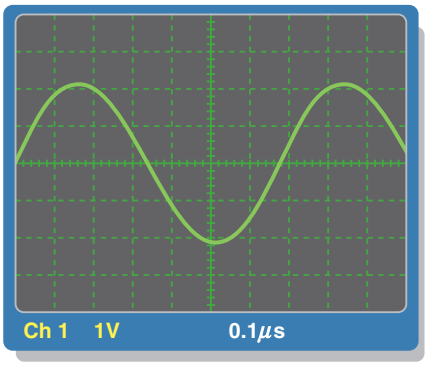

www.EngineeringBooksPdf.com

43. Find the amplitude, pulse width, and duty cycle for the pulse waveform displayed on the scope screen in Figure 83. The horizontal axis is 0 V.

▶ FIGURE 83

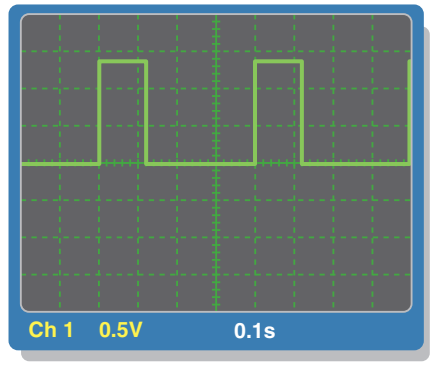

ADVANCED PROBLEMS

44. A certain sine wave has a frequency of 2.2 kHz and an rms value of 25 V. Assuming a given cycle begins (zero crossing) at $t = 0$ s, what is the change in voltage from 0.12 ms to 0.2 ms?

45. Figure 84 shows a sinusoidal voltage source in series with a dc source. Effectively, the two voltages are superimposed. Draw the total voltage across R_L. Determine the maximum current through R_L and the average voltage across R_L.

46. A nonsinusoidal waveform called a *stairstep* is shown in Figure 85. Determine its average value.

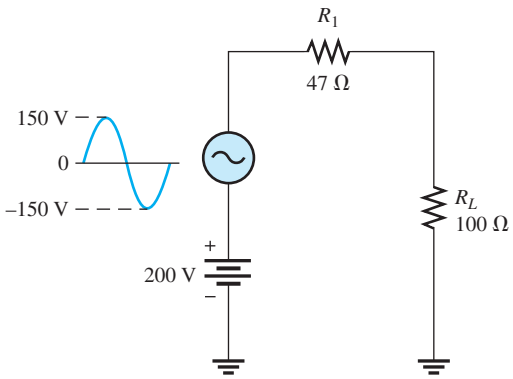

▲ FIGURE 84

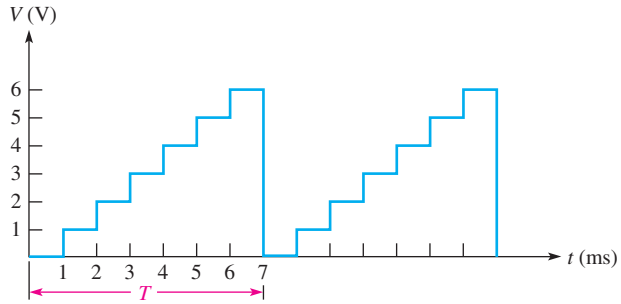

▲ FIGURE 85

47. Refer to the oscilloscope screen in Figure 86.

(a) How many cycles are displayed?

(b) What is the rms value of the sine wave?

(c) What is the frequency of the sine wave?

▶ FIGURE 86

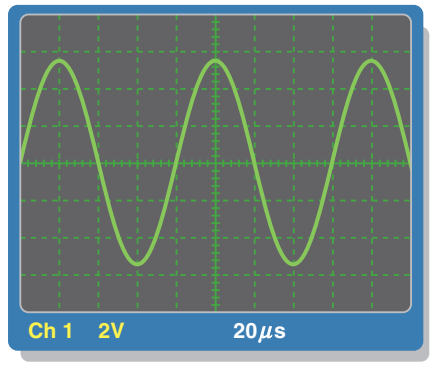

www.EngineeringBooksPdf.com

48. Accurately draw on a grid representing the scope screen in Figure 86 how the sine wave will appear if the Volts/Div control is moved to a setting of 5 V.

49. Accurately draw on a grid representing the scope screen in Figure 86 how the sine wave will appear if the Sec/Div control is moved to a setting of 10 μs.

50. Based on the instrument settings and an examination of the scope display and the circuit board in Figure 87, determine the frequency and peak value of the input signal and output signal. The waveform shown is channel 1. Draw the channel 2 waveform as it would appear on the scope with the indicated settings.

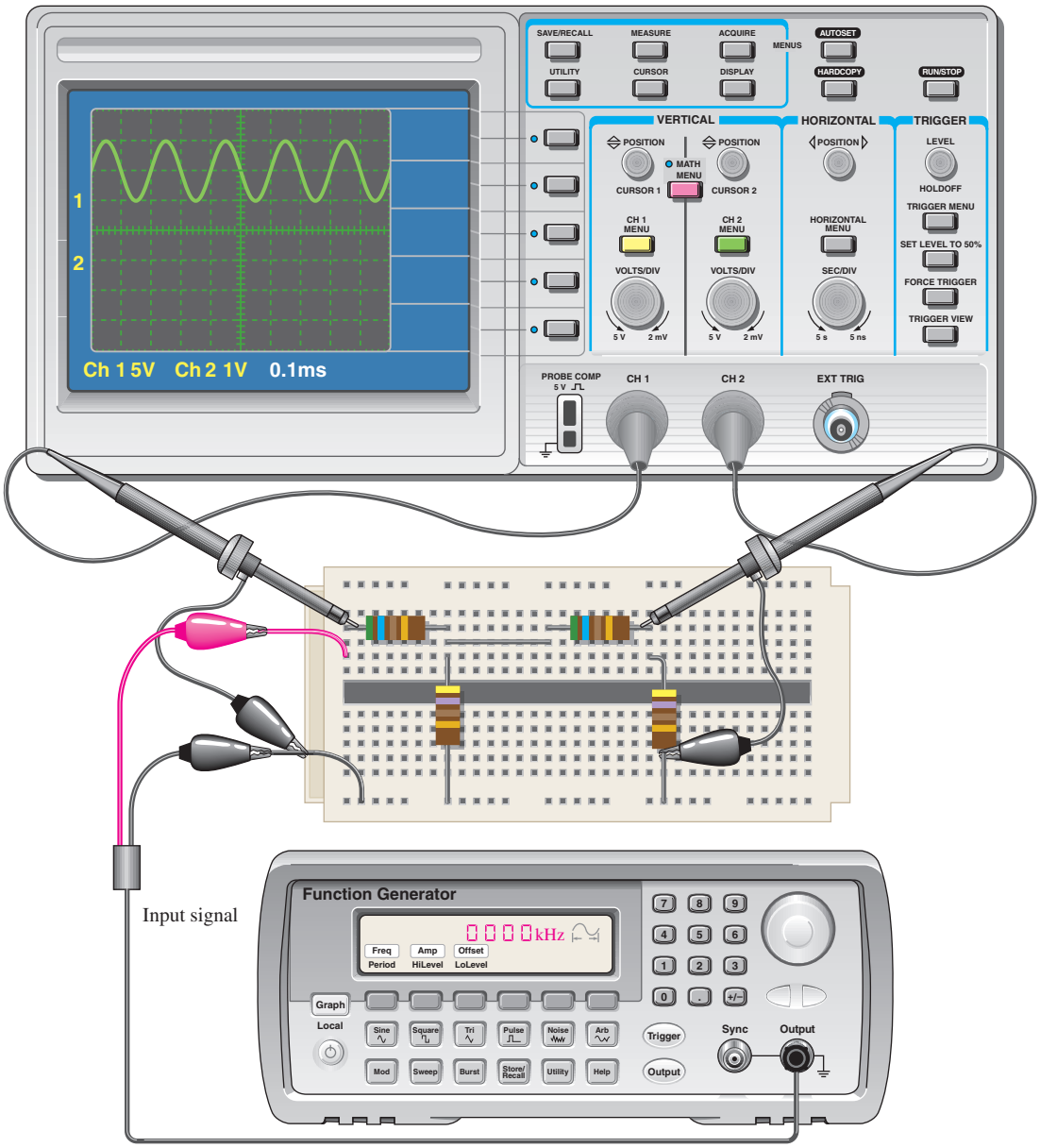

▲ FIGURE 87

www.EngineeringBooksPdf.com

51. Examine the circuit board and the oscilloscope display in Figure 88 and determine the peak value and the frequency of the unknown input signal.

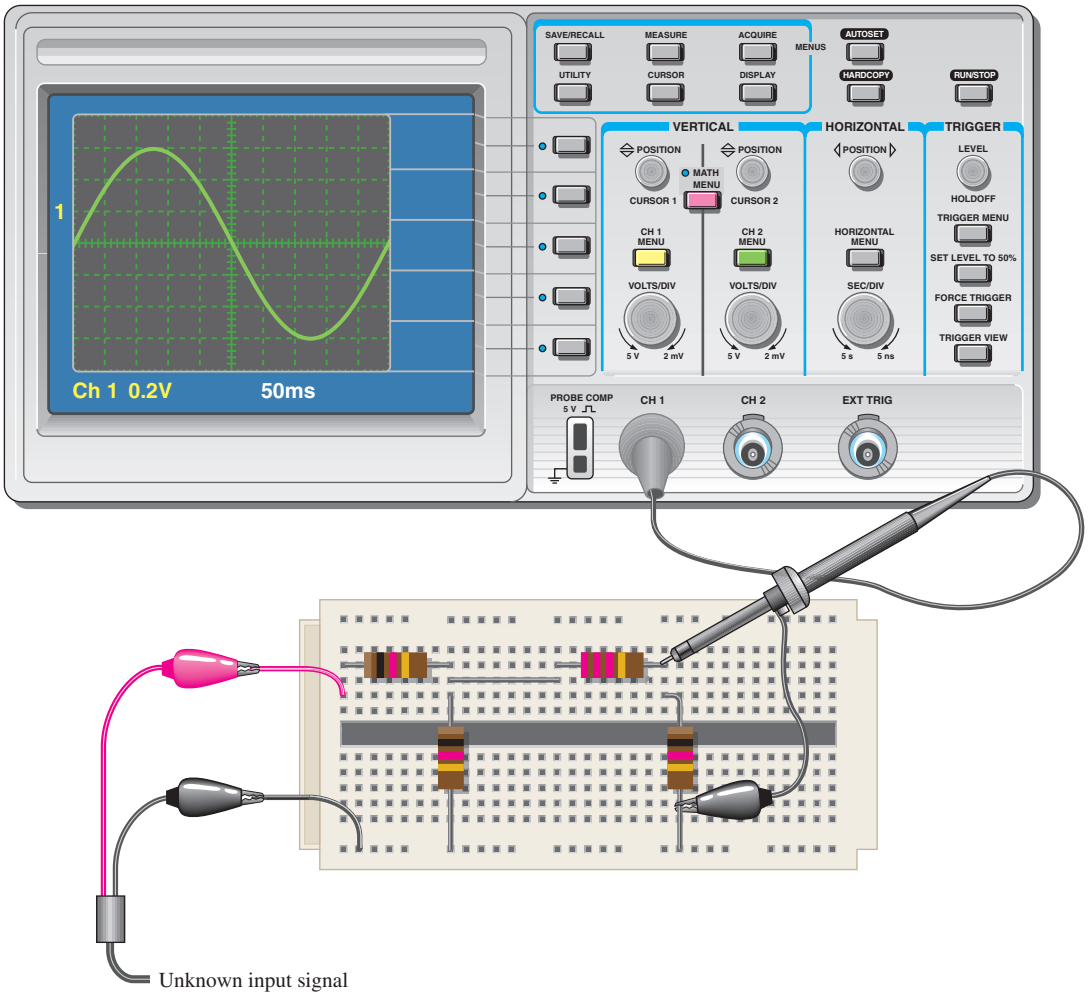

▲ FIGURE 88

MULTISIM TROUBLESHOOTING PROBLEMS

52. Open file P08–52; files are found at www.pearsonhighered.com/floyd/. Measure the peak value and period of the voltage sine wave using the oscilloscope.

53. Open file P08–53 and determine if there is a fault. If so, identify it.

54. Open file P08–54 and determine if there is a fault. If so, identify it.

55. Open file P08–55 and measure the amplitude and period of the pulse waveform using the oscilloscope.

56. Open file P08–56 and determine if there is a fault. If so, identify it.

ANSWERS

SECTION CHECKUPS

SECTION 1 The Sine Wave

1. One cycle goes from the zero crossing through a positive peak, then through zero to a negative peak and back to the zero crossing.

2. A sine wave changes polarity at the zero crossings.

3. A sine wave has two maximum points (peaks) in one cycle.

www.EngineeringBooksPdf.com

4. The period is measured from one zero crossing to the next corresponding zero crossing, or from one peak to the next corresponding peak.
5. Frequency is the number of cycles completed in one second and its unit is the hertz.
6. $f = 1/5\ \mu s = 200\ kHz$
7. $T = 1/120\ Hz = 8.33\ ms$

SECTION 2 Voltage and Current Values of Sine Waves

1. **(a)** $V_{pp} = 2(1\ V) = 2\ V$
   (b) $V_{pp} = 2(1.414)(1.414\ V) = 4\ V$
   (c) $V_{pp} = 2(1.57)(3\ V) = 9.42\ V$
2. **(a)** $V_{rms} = (0.707)(2.5\ V) = 1.77\ V$
   (b) $V_{rms} = (0.5)(0.707)(10\ V) = 3.54\ V$
   (c) $V_{rms} = (0.707)(1.57)(1.5\ V) = 1.66\ V$
3. **(a)** $V_{avg} = (0.637)(10\ V) = 6.37\ V$
   (b) $V_{avg} = (0.637)(1.414)(2.3\ V) = 2.07\ V$
   (c) $V_{avg} = (0.637)(0.5)(60\ V) = 19.1\ V$

SECTION 3 Angular Measurements of a Sine Wave

1. **(a)** The positive peak is at 90°.
   (b) The negative-going zero crossing is at 180°.
   (c) The negative peak is at 270°.
   (d) The cycle ends at 360°.
2. A half-cycle is completed in 180° or π radians.
3. A full cycle is completed in 360° or 2π radians.
4. $\theta = 90° - 45° = 45°$

SECTION 4 The Sine Wave Formula

1. **(a)** $\sin 30° = 0.5$
   (b) $\sin 60° = 0.866$
   (c) $\sin 90° = 1$
2. $v = 10 \sin 120° = 8.66\ V$
3. $v = 10 \sin(45° + 10°) = 8.19\ V$

SECTION 5 Analysis of AC Circuits

1. $I_p = V_p/R = (1.57)(12.5\ V)/330\ \Omega = 59.5\ mA$
2. $V_{s(rms)} = (0.707)(25.3\ V) = 17.9\ V$
3. $+V_{max} = 5\ V + 2.5\ V = 7.5\ V$
4. Yes, it will alternate.
5. $+V_{max} = 5\ V - 2.5\ V = 2.5\ V$

SECTION 6 Alternators (AC Generators)

1. The number of poles and the rotor speed
2. The brushes do not have to handle the output current.
3. A dc generator that supplies rotor current to larger alternators
4. The diodes convert the ac from the stator to dc for the final output.

SECTION 7 AC Motors

1. The difference is the rotors. In an induction motor, the rotor obtains current by transformer action; in a synchronous motor, the rotor is a permanent magnet or an electromagnet that is supplied current from an external source through slip rings and brushes.

www.EngineeringBooksPdf.com

2. The magnitude is constant.
3. The squirrel cage is composed of the electrical conductors that generate current in the rotor.
4. Slip is the difference between the synchronous speed of the stator field and the rotor speed.

SECTION 8 Nonsinusoidal Waveforms

1. **(a)** Rise time is the time interval from 10% to 90% of the amplitude;
   (b) Fall time is the time interval from 90% to 10% of the amplitude;
   (c) Pulse width is the time interval from 50% of the leading pulse edge to 50% of the trailing pulse edge.
2. $f = 1/1\text{ ms} = 1\text{ kHz}$
3. d.c. $= (1/5)100\% = 20\%$; Ampl. 1.5 V; $V_{avg} = 0.5\text{ V} + 0.2(1.5\text{ V}) = 0.8\text{ V}$
4. $T = 16\text{ ms}$
5. $f = 1/T = 1/1\ \mu\text{s} = 1\text{ MHz}$
6. Fundamental frequency is the repetition rate of the waveform.
7. 2nd harmonic: 2 kHz
8. $f = 1/10\ \mu\text{s} = 100\text{ kHz}$

SECTION 9 The Oscilloscope

1. Digital: Signal is converted to digital for processing and then reconstructed for display.
   Analog: Signal drives display directly.
2. Voltage is measured vertically.
3. The Volts/Div control sets the amount of volts represented by each division on the vertical scale.
4. The Sec/Div control sets the amount of time represented by each division on the horizontal scale.
5. Use a ×10 probe most of the time except when measuring very small voltages.

RELATED PROBLEMS FOR EXAMPLES

1 2.4 s
2 1.5 ms
3 20 kHz
4 200 Hz
5 1 ms
6 $V_{pp} = 50\text{ V}$; $V_{rms} = 17.7\text{ V}$; $V_{avg} = 15.9\text{ V}$
7 **(a)** $\pi/12$ rad
(b) 112.5°
8 8°
9 18.1 V
10 $I_{rms} = 4.53\text{ mA}$; $V_{1(rms)} = 4.53\text{ V}$; $V_{2(rms)} = 2.54\text{ V}$; $P_{tot} = 32\text{ mV}$
11 23.7 V
12 The waveform in part (a) never goes negative. The waveform in part (b) goes negative for a portion of its cycle.
13 250 rpm
14 5%
15 1.2 V
16 120 V

www.EngineeringBooksPdf.com

17 **(a)** $V_{rms} = 1.06\ V; f = 50\ \text{Hz}$
(b) $V_{rms} = 88.4\ \text{mV}; f = 1.67\ \text{kHz}$
(c) $V_{rms} = 4.81\ \text{V}; f = 5\ \text{kHz}$
(d) $V_{rms} = 7.07\ \text{V}; f = 250\ \text{kHz}$

TRUE/FALSE QUIZ

1. T **2.** F **3.** F **4.** T **5.** T **6.** F **7.** T **8.** F **9.** F **10.** T

SELF-TEST

1. (b) **2.** (b) **3.** (c) **4.** (b) **5.** (d) **6.** (a) **7.** (a) **8.** (a)
9. (c) **10.** (b) **11.** (a) **12.** (d) **13.** (c) **14.** (b) **15.** (d) **16.** (b)
17. (d)

TROUBLESHOOTING: SYMPTOM AND CAUSE

1. (c)
2. (c)
3. (b)
4. (a)
5. (b)

PROBLEMS – ODD-NUMBERED ANSWERS

1. **(a)** 1 Hz **(b)** 5 Hz **(c)** 20 Hz
(d) 1 kHz **(e)** 2 kHz **(f)** 100 kHz
3. 2 μs
5. 10 ms
7. **(a)** 7.07 mA **(b)** 4.5 mA **(c)** 14.14 mA
9. **(a)** 17.7 V **(b)** 25 V **(c)** 0 V **(d)** −17.7 V
11. 15°, *A* leads.
13. See Figure P–9.

▶ FIGURE P–9

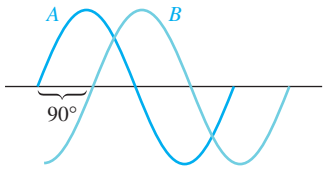

15. **(a)** 22.5° **(b)** 60° **(c)** 90°
(d) 108° **(e)** 216° **(f)** 324°
17. **(a)** 57.4 mA **(b)** 99.6 mA **(c)** −17.4 mA
(d) −57.4 mA **(e)** −99.6 mA **(f)** 0 mA
19. 30°: 13.0 V; 45°: 14.5 V; 90°: 13.0 V; 180°: −7.5 V; 200°: −11.5 V; 300°: −7.5 V
21. **(a)** 7.07 mA **(b)** 0 A **(c)** 10 mA
(d) 20 mA **(e)** 10 mA
23. 7.38 V
25. 4.24 V
27. 250 Hz

www.EngineeringBooksPdf.com

29. 200 rps

31. A one phase motor requires a starting winding or other means to produce torque for starting the motor, whereas a three phase motor is self starting.

33. $t_r \cong 3.0$ ms; $t_f \cong 3.0$ ms; $t_W \cong 12.0$ ms; Ampl. = 5 V

35. **(a)** −0.375 V **(b)** 3.01 V

37. **(a)** 50 kHz **(b)** 10 Hz

39. 25 kHz

41. 0.424 V; 2 Hz

43. 1.4 V; 120 ms; 30%

45. I_{max} = 2.38 A; V_{avg} = 136 V; See Figure P–10.

▶ **FIGURE P–10**

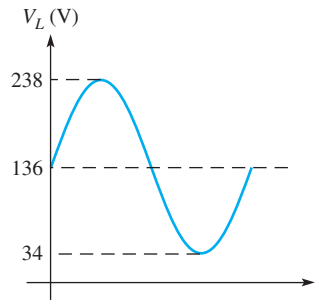

47. **(a)** 2.5 **(b)** 3.96 V **(c)** 12.5 kHz

49. See Figure P–11.

▶ **FIGURE P–11**

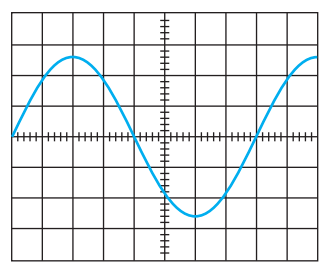

51. $V_{p(in)}$ = 4.44 V; f_{in} = 2 Hz

53. R_3 is open.

55. 5 V; 1 ms

PHOTO CREDITS FOR REOCCURRING IMAGES

CD Icon: Stockbyte/Getty Images; **Computer Chips:** Photodisc/Thinkstock; **Computer:** Jeff Maloney/Photodisc/Getty Images; **Fiber Optic:** discpicture/Shutterstock.

www.EngineeringBooksPdf.com

CAPACITORS

From Chapter 9 of *Electronics Fundamentals: Circuits, Devices, and Applications*, Eighth Edition, Thomas L. Floyd, David M. Buchla.
Copyright © 2010 by Pearson Education, Inc. Published by Pearson Prentice Hall. All rights reserved.

www.EngineeringBooksPdf.com

CAPACITORS

CHAPTER OUTLINE

1 The Basic Capacitor
2 Types of Capacitors
3 Series Capacitors
4 Parallel Capacitors
5 Capacitors in DC Circuits
6 Capacitors in AC Circuits
7 Capacitor Applications
Application Assignment: Putting Your Knowledge to Work

CHAPTER OBJECTIVES

- Describe the basic structure and characteristics of a capacitor
- Discuss various types of capacitors
- Analyze series capacitors
- Analyze parallel capacitors
- Describe how a capacitor operates in a dc switching circuit
- Describe how a capacitor operates in an ac circuit
- Discuss some capacitor applications

KEY TERMS

- Capacitor
- Dielectric
- Capacitance
- Farad (F)
- Dielectric strength
- Temperature coefficient
- Dielectric constant
- Charging
- *RC* time constant
- Exponential
- Transient time
- Capacitive reactance
- Instantaneous power
- True power
- Reactive power
- VAR (volt-ampere reactive)
- Filter
- Ripple voltage
- Coupling
- Decoupling
- Bypass

APPLICATION ASSIGNMENT PREVIEW

Capacitors are used in many applications. The application assignment in this chapter focuses on the use of capacitors in amplifier circuits to couple an ac voltage from one point to another while blocking dc voltage. You will determine if voltages measured on an amplifier circuit board with an oscilloscope are correct; and if they are not correct, you will troubleshoot the problem. After studying this chapter, you should be able to complete the application assignment.

VISIT THE COMPANION WEBSITE

Study aids for this chapter are available at http://www.pearsonhighered.com/floyd/

INTRODUCTION

The *capacitor* is a device that can store electrical charge, thereby creating an electric field which in turn stores energy. The measure of the charge-storing ability of a capacitor is its *capacitance*.

In this chapter, the basic capacitor is introduced and its characteristics are studied. The physical construction and electrical properties of various types of capacitors are discussed. Series and parallel combinations are analyzed, and the basic behavior of capacitors in both dc and ac circuits is studied. Representative applications also are discussed.

Streeter Photography/Alamy

www.EngineeringBooksPdf.com

1 THE BASIC CAPACITOR

A **capacitor** is a passive electrical component that stores electrical charge and has the property of capacitance.

After completing this section, you should be able to

- **Describe the basic structure and characteristics of a capacitor**
  - Explain how a capacitor stores charge
  - Define *capacitance* and state its unit
  - Explain how a capacitor stores energy
  - Discuss voltage rating and temperature coefficient
  - Explain capacitor leakage
  - Specify how the physical characteristics affect the capacitance

Basic Construction

In its simplest form, a capacitor is an electrical device constructed of two parallel conductive plates separated by an insulating material called the **dielectric**. Connecting leads are attached to the parallel plates. A basic capacitor is shown in Figure 1(a), and the schematic symbol is shown in part (b).

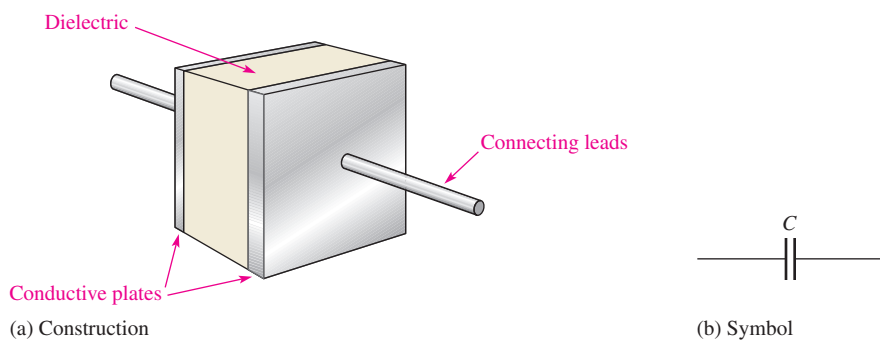

FIGURE 1

The basic capacitor.

How a Capacitor Stores Charge

In the neutral state, both plates of a capacitor have an equal number of free electrons, as indicated in Figure 2(a). When the capacitor is connected to a dc voltage source through a resistor, as shown in part (b), electrons (negative charge) are removed from plate *A*, and an equal number are deposited on plate *B*. As plate *A* loses electrons and plate *B* gains electrons, plate *A* becomes positive with respect to plate *B*. During this charging process, electrons flow only through the connecting leads and the source. No electrons flow through the dielectric of the capacitor because it is an insulator. The movement of electrons ceases when the voltage across the capacitor equals the source voltage, as indicated in Figure 2(c). If the capacitor is disconnected from the source, it retains the stored charge for a long period of time (the length of time depends on the type of capacitor) and still has the voltage across it, as shown in Figure 2(d). A charged capacitor can act as a temporary battery.

This icon indicates selected websites for further information on topics in this section. See the Companion Website provided with this text.

www.EngineeringBooksPdf.com

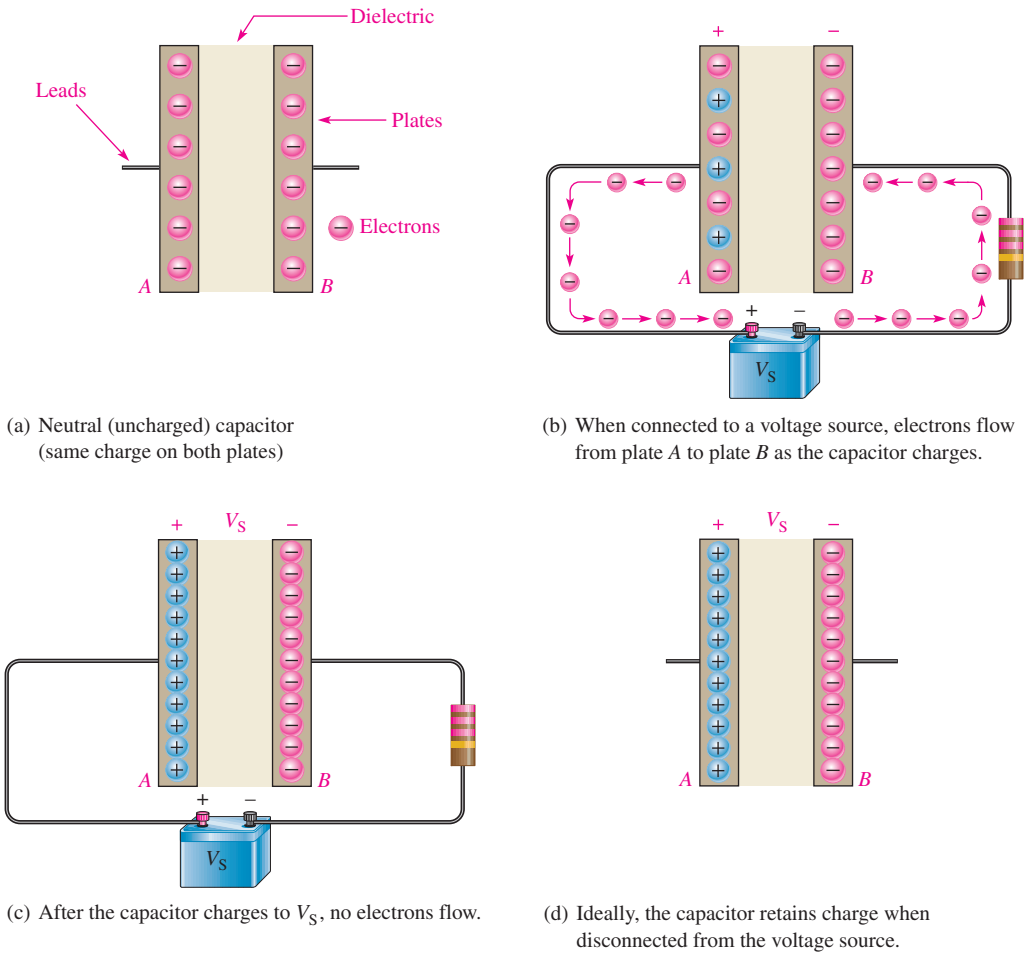

(a) Neutral (uncharged) capacitor (same charge on both plates)

(b) When connected to a voltage source, electrons flow from plate *A* to plate *B* as the capacitor charges.

(c) After the capacitor charges to V_S, no electrons flow.

(d) Ideally, the capacitor retains charge when disconnected from the voltage source.

▲ **FIGURE 2**

Illustration of a capacitor storing charge.

Capacitance

The amount of charge that a capacitor can store per unit of voltage across its plates is its capacitance, designated *C*. That is, **capacitance** is a measure of a capacitor's ability to store charge. The more charge per unit of voltage that a capacitor can store, the greater its capacitance, as expressed by the following formula:

Equation 1

$$C = \frac{Q}{V}$$

where *C* is capacitance, *Q* is charge, and *V* is voltage.

By rearranging the terms in Equation 1, you can obtain two other formulas.

Equation 2

$$Q = CV$$

Equation 3

$$V = \frac{Q}{C}$$

The Unit of Capacitance The **farad (F)** is the basic unit of capacitance. Recall that the coulomb (C) is the unit of electrical charge.

One farad is the amount of capacitance when one coulomb of charge is stored with one volt across the plates.

www.EngineeringBooksPdf.com

Most capacitors that are used in electronics work have capacitance values in microfarads (μF) and picofarads (pF). A microfarad is one-millionth of a farad ($1\ \mu\text{F} = 1 \times 10^{-6}$ F); and a picofarad is one-trillionth of a farad ($1\ \text{pF} = 1 \times 10^{-12}$ F). Conversions for farads, microfarads, and picofarads are given in Table 1.

TO CONVERT FROM	TO	MOVE THE DECIMAL POINT
Farads	Microfarads	right 6 places ($\times 10^6$)
Farads	Picofarads	right 12 places ($\times 10^{12}$)
Microfarads	Farads	left 6 places ($\times 10^{-6}$)
Microfarads	Picofarads	right 6 places ($\times 10^6$)
Picofarads	Farads	left 12 places ($\times 10^{-12}$)
Picofarads	Microfarads	left 6 places ($\times 10^{-6}$)

TABLE 1

Conversions for farads, microfarads, and picofarads.

EXAMPLE 1

(a) A certain capacitor stores 50 microcoulombs (50 μC) when 10 V are applied across its plates. What is its capacitance?

(b) A 2.2 μF capacitor has 100 V across its plates. How much charge does it store?

(c) Determine the voltage across a 100 pF capacitor that is storing 2 μC of charge.

Solution

(a) $C = \dfrac{Q}{V} = \dfrac{50\ \mu\text{C}}{10\ \text{V}} = \mathbf{5\ \mu F}$

(b) $Q = CV = (2.2\ \mu\text{F})(100\ \text{V}) = \mathbf{220\ \mu C}$

(c) $V = \dfrac{Q}{C} = \dfrac{2\ \mu\text{C}}{100\ \text{pF}} = \mathbf{20\ kV}$

*Related Problem** Determine V if $C = 1000$ pF and $Q = 10\ \mu$C.

*Answers are at the end of the chapter.

EXAMPLE 2

Convert the following values to microfarads:

(a) 0.00001 F **(b)** 0.0047 F **(c)** 1000 pF **(d)** 220 pF

Solution

(a) $0.00001\ \text{F} \times 10^6\ \mu\text{F/F} = \mathbf{10\ \mu F}$

(b) $0.0047\ \text{F} \times 10^6\ \mu\text{F/F} = \mathbf{4700\ \mu F}$

(c) $1000\ \text{pF} \times 10^{-6}\ \mu\text{F/pF} = \mathbf{0.001\ \mu F}$

(d) $220\ \text{pF} \times 10^{-6}\ \mu\text{F/pF} = \mathbf{0.00022\ \mu F}$

Related Problem Convert 47,000 pF to microfarads.

www.EngineeringBooksPdf.com

EXAMPLE 3

Convert the following values to picofarads:

(a) 0.1×10^{-8} F **(b)** 0.000027 F **(c)** 0.01 μF **(d)** 0.0047 μF

Solution

(a) $0.1 \times 10^{-8}\,\text{F} \times 10^{12}\,\text{pF/F} = \mathbf{1000\ pF}$

(b) $0.000027\,\text{F} \times 10^{12}\,\text{pF/F} = \mathbf{27 \times 10^6\ pF}$

(c) $0.01\,\mu\text{F} \times 10^{6}\,\text{pF}/\mu\text{F} = \mathbf{10{,}000\ pF}$

(d) $0.0047\,\mu\text{F} \times 10^{6}\,\text{pF}/\mu\text{F} = \mathbf{4700\ pF}$

Related Problem Convert 100 μF to picofarads.

How a Capacitor Stores Energy

A capacitor stores energy in an electric field that is established by the opposite charges stored on the two plates. The electric field is represented by lines of force between the positive and negative charges and is concentrated within the dielectric, as shown in Figure 3.

The plates in Figure 3 have acquired a charge because they are connected to a battery. This creates an electric field between the plates, which stores energy. The energy stored in the electric field is directly related to the size of the capacitor and to the square of the voltage as given by the following equation for the energy stored:

Equation 4

$$W = \frac{1}{2}CV^2$$

When capacitance (C) is in farads and voltage (V) is in volts, the energy (W) is in joules.

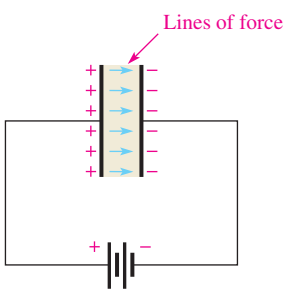

▲ **FIGURE 3**

The electric field stores energy in a capacitor. The beige area indicates the dielectric.

Voltage Rating

Every capacitor has a limit on the amount of voltage that it can withstand across its plates. The voltage rating specifies the maximum dc voltage that can be applied without risk of damage to the device. If this maximum voltage, commonly called the *breakdown voltage* or *working voltage,* is exceeded, permanent damage to the capacitor can result.

You must consider both the capacitance and the voltage rating before you use a capacitor in a circuit application. The choice of capacitance value is based on particular circuit requirements. The voltage rating should always be above the maximum voltage expected in a particular application.

Dielectric Strength The breakdown voltage of a capacitor is determined by the **dielectric strength** of the dielectric material used. The dielectric strength is expressed in V/mil (1 mil = 0.001 in. = 2.54×10^{-5} meter). Table 2 lists typical values for several materials. Exact values vary depending on the specific composition of the material.

▶ **TABLE 2**

Some common dielectric materials and their typical dielectric strengths.

MATERIAL	DIELECTRIC STRENGTH (V/MIL)
Air	80
Oil	375
Ceramic	1000
Paper (paraffined)	1200
Teflon®	1500
Mica	1500
Glass	2000

www.EngineeringBooksPdf.com

The dielectric strength of a capacitor can best be explained by an example. Assume that a certain capacitor has a plate separation of 1 mil and that the dielectric material is ceramic. This particular capacitor can withstand a maximum voltage of 1000 V because its dielectric strength is 1000 V/mil. If the maximum voltage is exceeded, the dielectric may break down and conduct current, causing permanent damage to the capacitor. If the ceramic capacitor has a plate separation of 2 mils, its breakdown voltage is 2000 V.

Temperature Coefficient

The **temperature coefficient** indicates the amount and direction of a change in capacitance value with temperature. A positive temperature coefficient means that the capacitance increases with an increase in temperature or decreases with a decrease in temperature. A negative coefficient means that the capacitance decreases with an increase in temperature or increases with a decrease in temperature.

Temperature coefficients typically are specified in parts per million per Celsius degree (ppm/°C). For example, a negative temperature coefficient of 150 ppm/°C for a 1 μF capacitor means that for every degree Celsius rise in temperature, the capacitance decreases by 150 pF (there are one million picofarads in one microfarad).

Leakage

No insulating material is perfect. The dielectric of any capacitor will conduct some very small amount of current. Thus, the charge on a capacitor will eventually leak off. Some types of capacitors have higher leakages than others. An equivalent circuit for a nonideal capacitor is shown in Figure 4. The parallel resistor R_{leak} represents the extremely high resistance (several hundred kΩ or more) of the dielectric material through which there is leakage current.

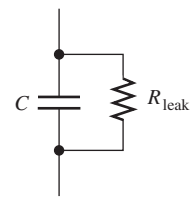

▲ FIGURE 4

Equivalent circuit for a nonideal capacitor.

Physical Characteristics of a Capacitor

The following parameters are important in establishing the capacitance and the voltage rating of a capacitor: plate area, plate separation, and dielectric constant.

Plate Area *Capacitance is directly proportional to the physical size of the plates as determined by the plate area, A.* A large plate area produces more capacitance, and a smaller plate area produces less capacitance. Figure 5(a) shows that the plate area of a parallel plate capacitor is the area of one of the plates. If the plates are moved in relation to each other, as shown in Figure 5(b), the overlapping area determines the effective plate area. This variation in effective plate area is the basis for a certain type of variable capacitor.

Plate Separation *Capacitance is inversely proportional to the distance between the plates.* The plate separation is designated *d*, as shown in Figure 6. A greater separation

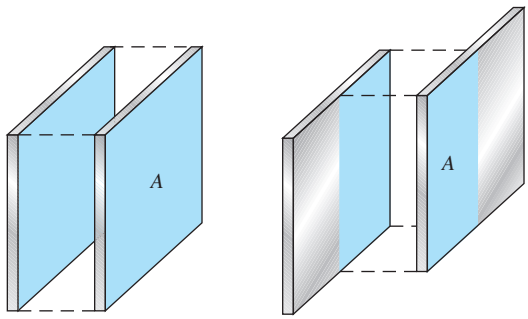

(a) Full plate area: more capacitance

(b) Reduced plate area: less capacitance

▲ FIGURE 5

Capacitance is directly proportional to plate area (*A*).

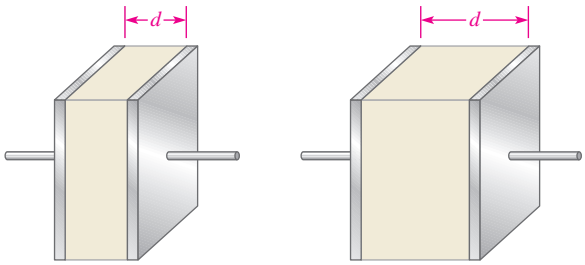

(a) Plates closer together: more capacitance

(b) Plates further apart: less capacitance

▲ FIGURE 6

Capacitance is inversely proportional to the distance *d* between the plates.

www.EngineeringBooksPdf.com

of the plates produces a lesser capacitance, as illustrated in the figure. The breakdown voltage is directly proportional to the plate separation. The further the plates are separated, the greater the breakdown voltage.

Dielectric Constant As you know, the insulating material between the plates of a capacitor is called the *dielectric.* Every dielectric material has the ability to concentrate the lines of force of the electric field existing between the oppositely charged plates of a capacitor and thus increase the capacity for energy storage. The measure of a material's ability to establish an electric field is called the **dielectric constant** or *relative permittivity,* symbolized by ε_r (the Greek letter epsilon).

Capacitance is directly proportional to the dielectric constant. The dielectric constant of a vacuum is defined as 1, and that of air is very close to 1. These values are used as a reference, and all other materials have values of ε_r specified with respect to that of a vacuum or air. For example, a material with $\varepsilon_r = 5$ can have a capacitance five times greater than that of air, with all other factors being equal.

Table 3 lists several common dielectric materials and a typical dielectric constant for each. The values can vary because it depends on the specific composition of the material.

▶ **TABLE 3**

Some common dielectric materials and their typical dielectric constants.

MATERIAL	TYPICAL ε_r VALUE
Air (vacuum)	1.0
Teflon®	2.0
Paper (paraffined)	2.5
Oil	4.0
Mica	5.0
Glass	7.5
Ceramic	1200

The dielectric constant (relative permittivity) is dimensionless because it is a relative measure. It is a ratio of the absolute permittivity of a material, ε, to the absolute permittivity of a vacuum, ε_0, as expressed by the following formula:

Equation 5

$$\varepsilon_r = \frac{\varepsilon}{\varepsilon_0}$$

The value of ε_0 is 8.85×10^{-12} F/m (farads per meter).

Formula for Capacitance You have seen how capacitance is directly related to plate area, A, and the dielectric constant, ε_r, and inversely related to plate separation, d. An exact formula for calculating the capacitance in terms of these three quantities is

Equation 6

$$C = \frac{A\varepsilon_r(8.85 \times 10^{-12}\ \text{F/m})}{d}$$

where A is in square meters (m^2), d is in meters (m), and C is in farads (F).

EXAMPLE 4

Determine the capacitance in μF of a parallel plate capacitor having a plate area of 0.01 m^2 and a plate separation of 0.5 mil (1.27×10^{-5} m). The dielectric is mica, which has a dielectric constant of 5.0.

www.EngineeringBooksPdf.com

Solution Use Equation 6.

$$C = \frac{A\varepsilon_r(8.85 \times 10^{-12}\ \text{F/m})}{d} = \frac{(0.01\ \text{m}^2)(5.0)(8.85 \times 10^{-12}\ \text{F/m})}{1.27 \times 10^{-5}\ \text{m}} = \mathbf{0.035\ \mu F}$$

Related Problem Determine C in μF where $A = 3.6 \times 10^{-5}\ \text{m}^2$, $d = 1$ mil (2.54×10^{-5} m), and ceramic is the dielectric.

SECTION 1 CHECKUP
Answers are at the end of the chapter.

1. Define *capacitance*.
2. (a) How many microfarads in one farad?
   (b) How many picofarads in one farad?
   (c) How many picofarads in one microfarad?
3. Convert 0.0015 μF to picofarads. To farads.
4. How much energy in joules is stored by a 0.01 μF capacitor with 15 V across its plates?
5. (a) When the plate area of a capacitor is increased, does the capacitance increase or decrease?
   (b) When the distance between the plates is increased, does the capacitance increase or decrease?
6. The plates of a ceramic capacitor are separated by 2 mils. What is the typical breakdown voltage?

2 TYPES OF CAPACITORS

Capacitors normally are classified according to the type of dielectric material. The most common types of dielectric materials are mica, ceramic, plastic-film, and electrolytic (aluminum oxide and tantalum oxide).

After completing this section, you should be able to

- **Discuss various types of capacitors**
  - Describe the characteristics of mica, ceramic, plastic-film, and electrolytic capacitors
  - Describe types of variable capacitors
  - Identify capacitor labeling
  - Discuss capacitance measurement

Fixed Capacitors

Mica Capacitors Two types of mica capacitors are stacked-foil and silver-mica. The basic construction of the stacked-foil type is shown in Figure 7. It consists of alternate layers of metal foil and thin sheets of mica. The metal foil forms the plate, with alternate foil sheets connected together to increase the plate area. More layers are used to increase the plate area, thus increasing the capacitance. The mica/foil stack is encapsulated in an insulating material such as Bakelite®, as shown in Figure 7(b). The silver-mica capacitor is formed in a similar way by stacking mica sheets with silver electrode material screened on them.

www.EngineeringBooksPdf.com

▶ FIGURE 7

Construction of a typical radial-lead mica capacitor.

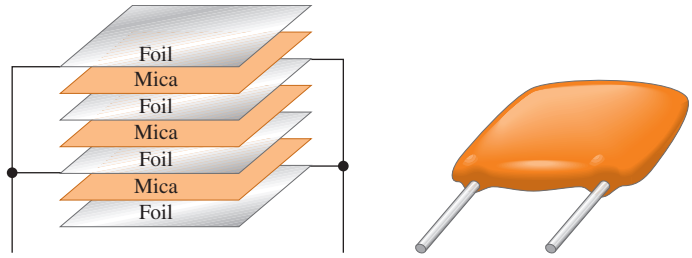

(a) Stacked layer arrangement (b) Layers are pressed together and encapsulated.

Mica capacitors are generally available with capacitance values ranging from 1 pF to 0.1 μF and voltage ratings from 100 V dc to 2500 V dc and higher. Mica has a typical dielectric constant of 5.

Ceramic Capacitors Ceramic dielectrics provide very high dielectric constants (1200 is typical). As a result, comparatively high capacitance values can be achieved in a small physical size. Ceramic capacitors are commonly available in a ceramic disk form, as shown in Figure 8; in a multilayer radial-lead configuration, as shown in Figure 9; or in a leadless ceramic chip, as shown in Figure 10.

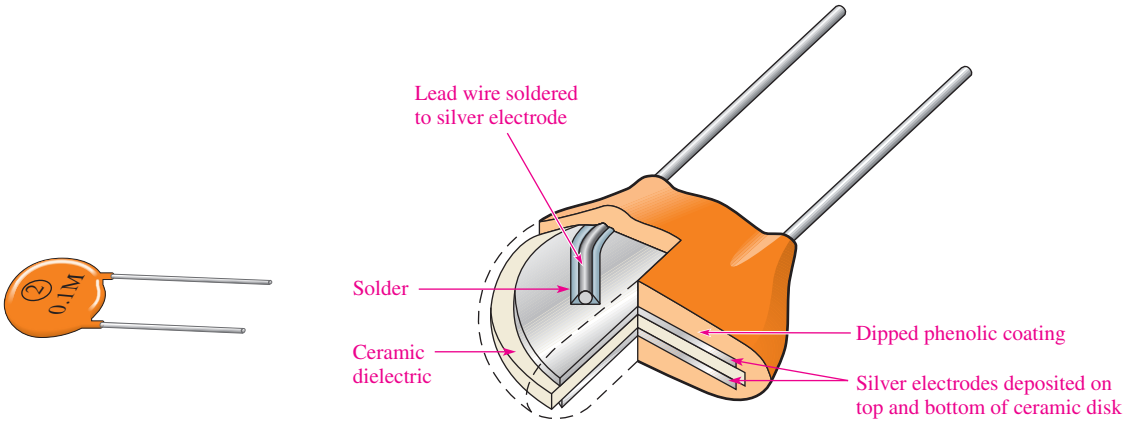

(a) (b)

▲ FIGURE 8

A ceramic disk capacitor and its basic construction.

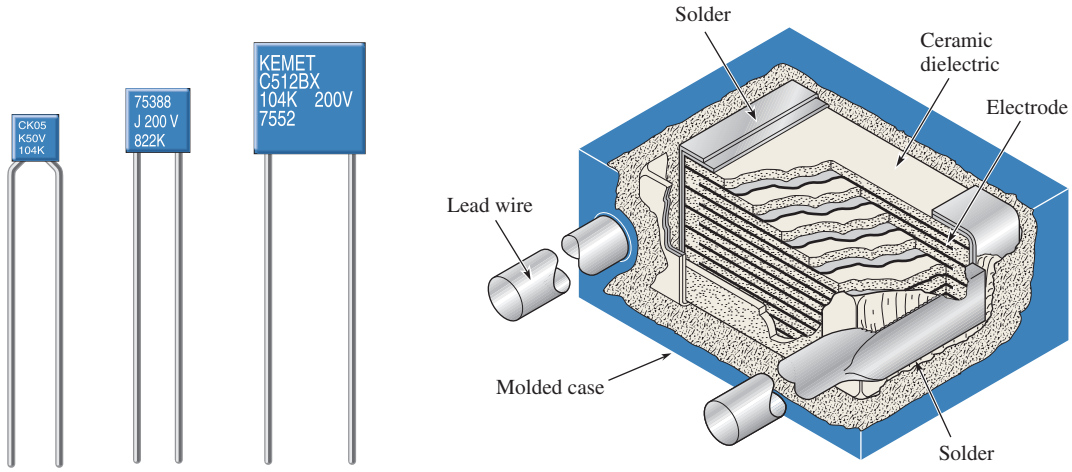

(a) Typical capacitors (b) Construction view

▲ FIGURE 9

Examples of ceramic capacitors.

www.EngineeringBooksPdf.com

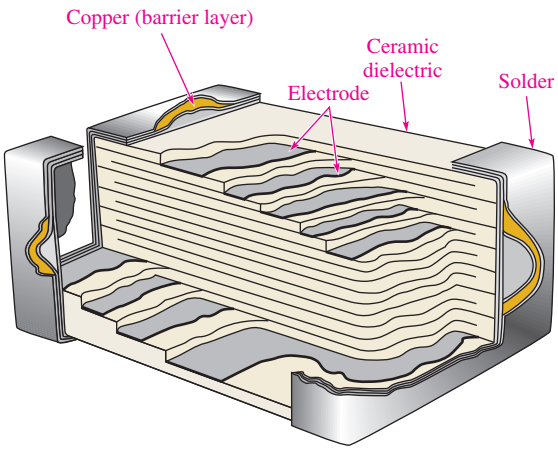

◀ **FIGURE 10**

Construction view of a typical ceramic chip capacitor used for surface mounting on printed circuit boards.

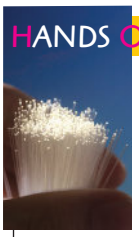

HANDS ON TIP

Chip capacitors are for surface mounting on a printed circuit board and have conductive terminals plated on the ends. These capacitors will withstand the molten solder temperatures encountered in reflow and wave soldering used in automated circuit board assembly. Chip capacitors are in great demand because of the move toward miniaturization.

Ceramic capacitors typically are available in capacitance values ranging from 1 pF to 100 μF with voltage ratings up to 6 kV.

Plastic-Film Capacitors Common dielectric materials used in plastic-film capacitors include polycarbonate, propylene, polyester, polystyrene, polypropylene, and mylar. Some of these types have capacitance values up to 100 μF but most are less than 1 μF.

Figure 11 shows a basic construction used in many plastic-film capacitors. A thin strip of plastic-film dielectric is sandwiched between two thin metal strips that act as plates. One lead is connected to the inner plate and one is connected to the outer plate as indicated. The strips are then rolled in a spiral configuration and encapsulated in a molded case. Thus, a large plate area can be packaged in a relatively small physical size, thereby achieving large capacitance values. Another method uses metal deposited directly on the film dielectric to form the plates.

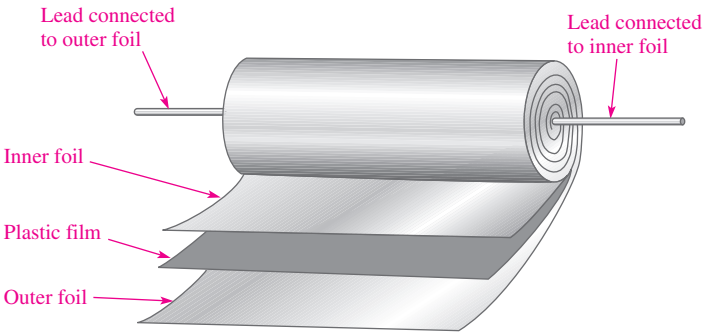

◀ **FIGURE 11**

Basic construction of axial-lead tubular plastic-film dielectric capacitors.

Figure 12(a) shows typical plastic-film capacitors. Figure 12(b) shows a construction view for one type of an axial-lead plastic-film capacitor.

Electrolytic Capacitors Electrolytic capacitors are polarized so that one plate is positive and the other negative. These capacitors are generally used for high capacitance values from 1 μF up to over 200,000 μF, but they have relatively low breakdown voltages (350 V is a typical maximum but higher voltages are occasionally found) and high amounts of leakage.

In recent years, manufacturers have developed new electrolytic capacitors with much larger capacitance values; however, these new capacitors have lower voltage ratings than smaller-value capacitors and tend to be expensive. Super capacitors with capacitances of hundreds of farads are available. These capacitors are useful for battery backup and for applications like small motor starters that require a very large capacitance.

SAFETY NOTE

Be extremely careful with electrolytic capacitors because it does make a difference which way an electrolytic capacitor is connected. Always observe the proper polarity. If a polarized capacitor is connected backwards, it may explode and cause injury.

www.EngineeringBooksPdf.com

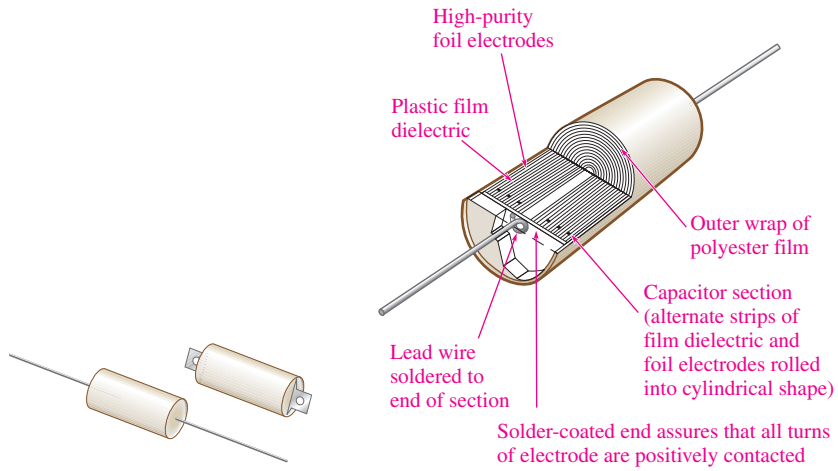

(a) Typical capacitors

(b) Construction view

▲ **FIGURE 12**

Examples of plastic-film capacitors.

Electrolytic capacitors offer much higher capacitance values than mica or ceramic capacitors, but their voltage ratings are typically lower. While other capacitors use two similar plates, the electrolytic capacitor consists of one plate made of aluminum foil and another plate made of a conducting electrolyte applied to a material such as plastic film. These two "plates" are separated by a layer of aluminum oxide that forms on the surface of the aluminum plate. Figure 13(a) illustrates the construction of a typical aluminum electrolytic capacitor with axial leads. Other electrolytic capacitors with radial leads are shown in Figure 13(b); the symbol for an electrolytic capacitor is shown in part (c).

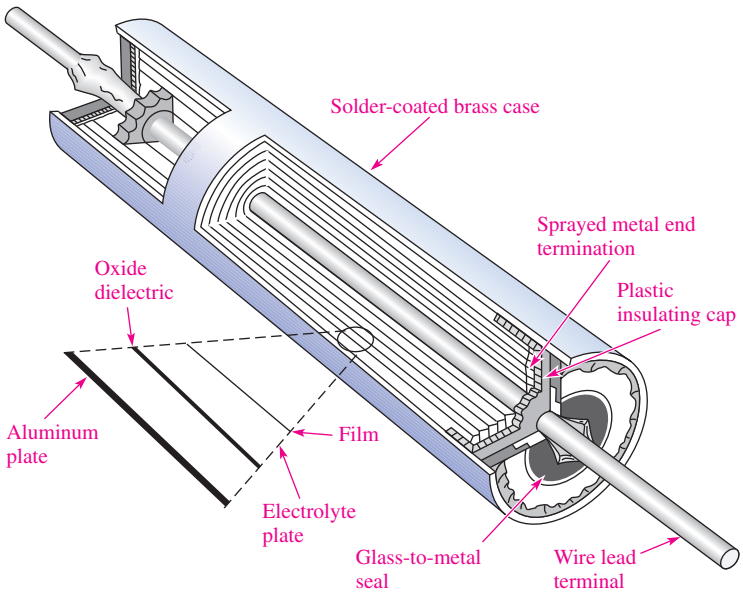

(a) Construction view of an axial-lead electrolytic capacitor

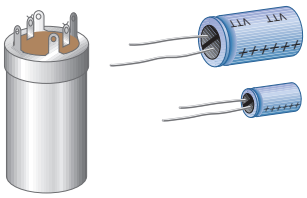

(b) Typical radial-lead electrolytics

(c) Symbol for an electrolytic capacitor.

▲ **FIGURE 13**

Examples of electrolytic capacitors.

www.EngineeringBooksPdf.com

Tantalum electrolytic capacitors can be in either a tubular configuration similar to Figure 13 or "tear drop" shape as shown in Figure 14. In the tear drop configuration, the positive plate is actually a pellet of tantalum powder rather than a sheet of foil. Tantalum pentoxide forms the dielectric, and manganese dioxide forms the negative plate.

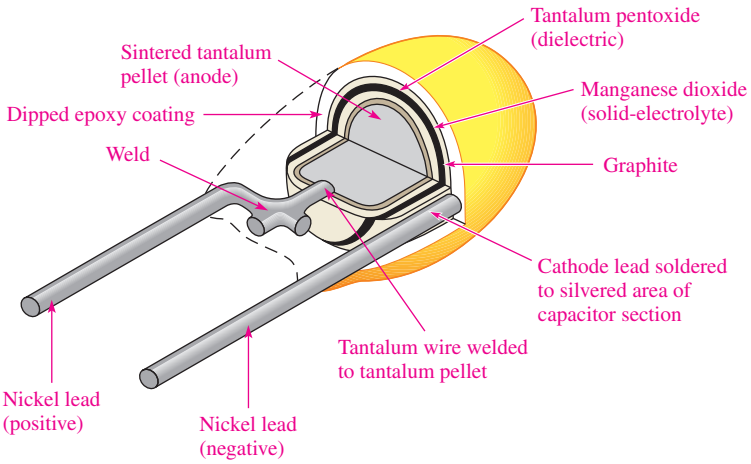

▲ **FIGURE 14**

Construction view of a typical "tear drop" shaped tantalum electrolytic capacitor.

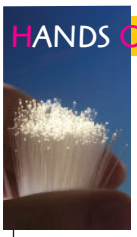

HANDS ON TIP

Scientists are working with graphene, a carbon-based material that may be used for improved charge storage in rechargeable batteries and ultra-capacitors. The ability to store large amounts of charge is important in many applications from office copiers to improving the efficiency of electric and hybrid vehicles. The new technology may speed development of renewable energies such as wind and solar power, which need to be able to store large amounts of energy.

Because of the process used for the insulating pentoxide dielectric, the metallic (aluminum or tantalum) plate is always positive with respect to the electrolyte plate, and thus all electrolytic capacitors are polarized. The metal plate (positive lead) is usually indicated by a plus sign or some other obvious marking and must always be connected in a dc circuit where the voltage across the capacitor does not change polarity. Reversal of the polarity of the voltage can result in complete destruction of the capacitor.

Variable Capacitors

Variable capacitors are used in a circuit when there is a need to adjust the capacitance value either manually or automatically. These capacitors are generally less than 300 pF but are available in larger values for specialized application. The schematic symbol for a variable capacitor is shown in Figure 15.

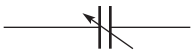

▲ **FIGURE 15**

Schematic symbol for a variable capacitor.

Adjustable capacitors that normally have slotted screw-type adjustments and are used for very fine adjustments in a circuit are called **trimmers**. Ceramic or mica is a common dielectric in these types of capacitors, and the capacitance usually is changed by adjusting the plate separation. Generally, trimmer capacitors have values less than 100 pF. Figure 16 shows some typical devices.

The **varactor** is a semiconductive device that exhibits a capacitance characteristic that is varied by changing the voltage across its terminals. This device usually is covered in detail in a course on electronic devices.

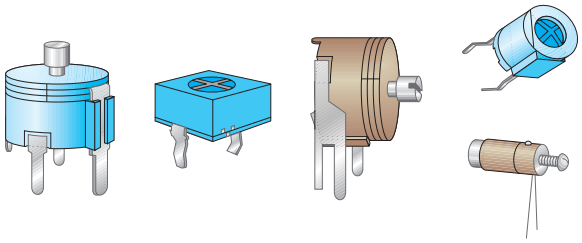

◀ **FIGURE 16**

Trimmer capacitors.

www.EngineeringBooksPdf.com

Capacitor Labeling

Capacitor values are indicated on the body of the capacitor either by numerical or alphanumerical labels and sometimes by color codes. Capacitor labels indicate various parameters such as capacitance, voltage rating, and tolerance.

Some capacitors carry no unit designation for capacitance. In these cases, the units are implied by the value indicated and are recognized by experience. For example, a ceramic capacitor marked .001 or .01 has units of microfarads because picofarad values that small are not available. As another example, a ceramic capacitor labeled 50 or 330 has units of picofarads because microfarad units that large normally are not available in this type. In some cases a 3-digit designation is used. The first two digits are the first two digits of the capacitance value. The third digit is the multiplier or number of zeros after the second digit. For example, 103 means 10,000 pF. In some instances, the units are labeled as pF or μF; sometimes the microfarad unit is labeled as MF or MFD.

A voltage rating appears on some types of capacitors with WV or WVDC and is omitted on others. When it is omitted, the voltage rating can be determined from information supplied by the manufacturer. The tolerance of the capacitor is usually labeled as a percentage, such as $\pm 10\%$. The temperature coefficient is indicated by a *parts per million* marking. This type of label consists of a P or N followed by a number. For example, N750 means a negative temperature coefficient of 750 ppm/°C, and P30 means a positive temperature coefficient of 30 ppm/°C. An NP0 designation means that the positive and negative coefficients are zero; thus the capacitance does not change with temperature. Certain types of capacitors are color coded.

▲ FIGURE 17

A typical capacitance meter. (Courtesy of B+K Precision)

Capacitance Measurement

A capacitance meter, such as the one shown in Figure 17, can be used to check the value of a capacitor. Also, many DMMs provide a capacitance measurement feature. All capacitors change value over a period of time, some more than others. Ceramic capacitors, for example, often exhibit a 10% to 15% change in the value during the first year. Electrolytic capacitors are particularly subject to value change due to drying of the electrolytic solution. In other cases, capacitors may be labeled incorrectly or the wrong value may have been installed in the circuit. Although a value change represents less than 25% of defective capacitors, a value check should be made to quickly eliminate this as a source of trouble when troubleshooting a circuit. Values from 200 pF to 50,000 μF can be measured by simply connecting the capacitor, setting the switch, and reading the value on the display.

Some capacitance meters can also be used to check for leakage current in capacitors. In order to check for leakage, a sufficient voltage must be applied across the capacitor to simulate operating conditions. This is automatically done by the test instrument. Over 40% of all defective capacitors have excessive leakage current and electrolytic capacitors are particularly susceptible to this problem.

SECTION 2 CHECKUP

1. How are capacitors commonly classified?
2. What is the difference between a fixed and a variable capacitor?
3. What type of capacitor normally is polarized?
4. What precautions must be taken when a polarized capacitor is installed in a circuit?
5. An electrolytic capacitor is connected between a negative supply voltage and ground. Which capacitor lead should be connected to ground?

www.EngineeringBooksPdf.com

3 SERIES CAPACITORS

The total capacitance of a series connection of capacitors is less than the individual capacitance of any of the capacitors. Capacitors in series divide voltage across them in proportion to their capacitance.

After completing this section, you should be able to

- **Analyze series capacitors**
  - Determine total capacitance
  - Determine capacitor voltages

When capacitors are connected in series, the total capacitance is less than the smallest capacitance value because the effective plate separation increases. The calculation of total series capacitance is analogous to the calculation of total resistance of parallel resistors.

Two capacitors can be used in series to show how the total capacitance is determined. Figure 18 shows two capacitors, which initially are uncharged, connected in series with a dc voltage source. When the switch is closed, as shown in part (a), current begins.

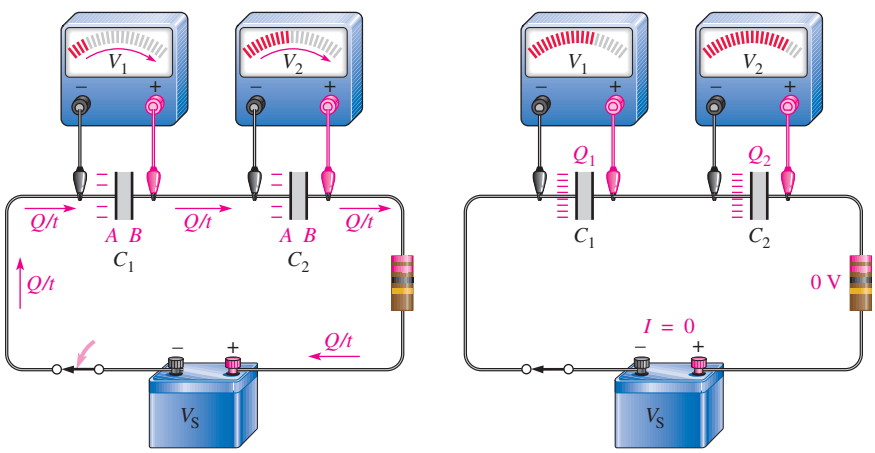

(a) While charging, $I = Q/t$ is the same at all points. Capacitor voltages are increasing.

(b) Both capacitors store the same amount of charge ($Q_T = Q_1 = Q_2$).

◀ **FIGURE 18**

Capacitors in series produce a total capacitance that is less than the smallest value.

Recall that current is the same at all points in a series circuit and that current is defined as the rate of flow of charge ($I = Q/t$). In a certain period of time, a certain amount of charge moves through the circuit. Since current is the same everywhere in the circuit of Figure 18(a), the same amount of charge is moved from the negative side of the source to plate A of C_1, and from plate B of C_1 to plate A of C_2, and from plate B of C_2 to the positive side of the source. As a result, of course, the same amount of charge is deposited on the plates of both capacitors in a given period of time, and the total charge (Q_T) moved through the circuit in that period of time equals the charge stored by C_1 and also equals the charge stored by C_2.

$$Q_T = Q_1 = Q_2$$

As the capacitors charge, the voltage across each one increases as indicated.

Figure 18(b) shows the capacitors after they have been completely charged and the current has ceased. Both capacitors store an equal amount of charge (Q), and the voltage across each one depends on its capacitance value ($V = Q/C$). By Kirchhoff's voltage law,

www.EngineeringBooksPdf.com

which applies to capacitive circuits as well as to resistive circuits, the sum of the capacitor voltages equals the source voltage.

$$V_S = V_1 + V_2$$

Using the formula $V = Q/C$, you can substitute into the formula for Kirchhoff's law and get the following relationship (where $Q = Q_T = Q_1 = Q_2$):

$$\frac{Q}{C_T} = \frac{Q}{C_1} + \frac{Q}{C_2}$$

The Q can be factored out of the right side of the equation and canceled with the Q on the left side as follows:

$$\frac{\cancel{Q}}{C_T} = \cancel{Q}\left(\frac{1}{C_1} + \frac{1}{C_2}\right)$$

Thus, you have the following relationship for two capacitors in series:

$$\frac{1}{C_T} = \frac{1}{C_1} + \frac{1}{C_2}$$

Taking the reciprocal of both sides of this equation gives the formula for the total capacitance for two capacitors in series.

$$C_T = \frac{1}{\dfrac{1}{C_1} + \dfrac{1}{C_2}}$$

This equation can also be expressed equivalently as

Equation 7

$$\boldsymbol{C_T = \frac{C_1 C_2}{C_1 + C_2}}$$

EXAMPLE 5

Find the total capacitance C_T in Figure 19.

▶ **FIGURE 19**

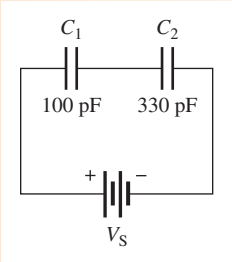

Solution

$$C_T = \frac{C_1 C_2}{C_1 + C_2} = \frac{(100\text{ pF})(330\text{ pF})}{100\text{ pF} + 330\text{ pF}} = \mathbf{76.7\ pF}$$

Related Problem Determine C_T if $C_1 = 470$ pF and $C_2 = 680$ pF in Figure 19.

General Formula The equation for two series capacitors can be extended to any number of capacitors in series, as shown in Figure 20.

www.EngineeringBooksPdf.com

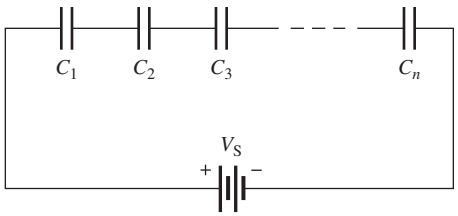

◀ FIGURE 20

General circuit with n capacitors in series.

The formula for total capacitance for any number of capacitors in series is developed as follows; the subscript n can be any number.

$$\frac{1}{C_T} = \frac{1}{C_1} + \frac{1}{C_2} + \frac{1}{C_3} + \cdots + \frac{1}{C_n}$$

$$C_T = \frac{1}{\frac{1}{C_1} + \frac{1}{C_2} + \frac{1}{C_3} + \cdots + \frac{1}{C_n}} \qquad \text{Equation 8}$$

Remember,

The total series capacitance is always less than the smallest capacitance.

EXAMPLE 6

Determine the total capacitance in Figure 21.

▶ FIGURE 21

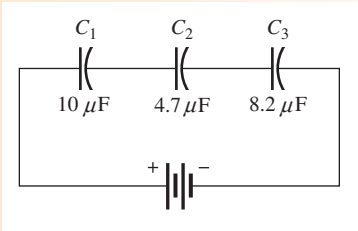

Solution

$$C_T = \frac{1}{\frac{1}{C_1} + \frac{1}{C_2} + \frac{1}{C_3}} = \frac{1}{\frac{1}{10\ \mu F} + \frac{1}{4.7\ \mu F} + \frac{1}{8.2\ \mu F}} = \mathbf{2.30\ \mu F}$$

Related Problem If another 4.7 μF capacitor is connected in series with the three existing capacitors in Figure 21, what is the value of C_T?

Capacitor Voltages

The voltage across each capacitor in a series connection depends on its capacitance value according to the formula $V = Q/C$. You can determine the voltage across any individual capacitor in series with the following formula:

$$V_x = \left(\frac{C_T}{C_x}\right)V_S \qquad \text{Equation 9}$$

where C_x is any capacitor in series, such as C_1, C_2, and C_3, and so on, and V_x is the voltage across C_x.

The largest-value capacitor in a series connection will have the smallest voltage across it. The smallest-value capacitor will have the largest voltage across it.

www.EngineeringBooksPdf.com

EXAMPLE 7

Find the voltage across each capacitor in Figure 22.

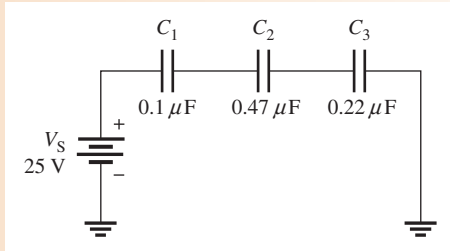

▲ FIGURE 22

Solution Calculate the total capacitance.

$$C_T = \frac{1}{\frac{1}{C_1} + \frac{1}{C_2} + \frac{1}{C_3}} = \frac{1}{\frac{1}{0.1\ \mu F} + \frac{1}{0.47\ \mu F} + \frac{1}{0.22\ \mu F}} = 0.06\ \mu F$$

The voltages are as follows:

$$V_1 = \left(\frac{C_T}{C_1}\right)V_S = \left(\frac{0.06\ \mu F}{0.1\ \mu F}\right)25\ V = \mathbf{15.0\ V}$$

$$V_2 = \left(\frac{C_T}{C_2}\right)V_S = \left(\frac{0.06\ \mu F}{0.47\ \mu F}\right)25\ V = \mathbf{3.19\ V}$$

$$V_3 = \left(\frac{C_T}{C_3}\right)V_S = \left(\frac{0.06\ \mu F}{0.22\ \mu F}\right)25\ V = \mathbf{6.82\ V}$$

Related Problem Another 0.47 μF capacitor is connected in series with the existing capacitors in Figure 22. Determine the voltage across the new capacitor, assuming all the capacitors are initially uncharged.

Open Multisim file E09-07; files are found at www.pearsonhighered.com/floyd/. Measure the voltage across each of the capacitors and compare with the calculated values. Connect another 0.47 μF capacitor in series with the other three and measure the voltage across the new capacitor. Also measure the voltage across C_1, C_2, and C_3 and compare with the previous voltages. Did the values increase or decrease after the fourth capacitor was added? Why?

SECTION 3 CHECKUP

1. Is the total capacitance of series capacitors less than or greater than the value of the smallest capacitor?
2. The following capacitors are in series: 100 pF, 220 pF, and 560 pF. What is the total capacitance?
3. A 0.01 μF and a 0.015 μF capacitor are in series. Determine the total capacitance.
4. Determine the voltage across the 0.01 μF capacitor in Question 3 if 10 V are connected across the two series capacitors.

www.EngineeringBooksPdf.com

4 PARALLEL CAPACITORS

Capacitances add when they are connected in parallel.

After completing this section, you should be able to

- **Analyze parallel capacitors**
  - Determine total capacitance

When capacitors are connected in parallel, the total capacitance is the sum of the individual capacitances because the effective plate area increases. The calculation of total parallel capacitance is analogous to the calculation of total series resistance.

Figure 23 shows two parallel capacitors connected to a dc voltage source. When the switch is closed, as shown in part (a), current begins. A total amount of charge (Q_T) moves through the circuit in a certain period of time. Part of the total charge is stored by C_1 and part by C_2. The portion of the total charge that is stored by each capacitor depends on its capacitance value according to the relationship $Q = CV$.

Figure 23(b) shows the capacitors after they have been completely charged and the current has stopped. Since the voltage across both capacitors is the same, the larger capacitor stores more charge. If the capacitors are equal in value, they store an equal amount of charge. The charge stored by both of the capacitors together equals the total charge that was delivered from the source.

$$Q_T = Q_1 + Q_2$$

Since $Q = CV$, Equation 2, you can use substitution to get the following relationship:

$$C_T V_S = C_1 V_S + C_2 V_S$$

Because all the V_S terms are equal, they can be canceled. Therefore, the total capacitance for two capacitors in parallel is

$$\boldsymbol{C_T = C_1 + C_2}$$ **Equation 10**

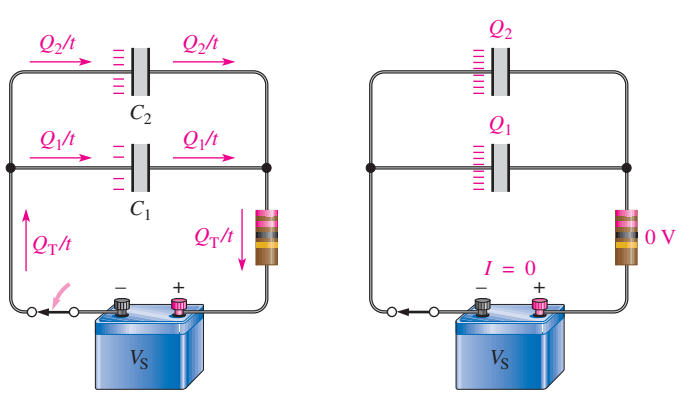

(a) The amount of charge on each capacitor is directly proportional to its capacitance value.

(b) $Q_T = Q_1 + Q_2$

▲ **FIGURE 23**

Capacitors in parallel produce a total capacitance that is the sum of the individual capacitances.

www.EngineeringBooksPdf.com

EXAMPLE 8

What is the total capacitance in Figure 24? What is the voltage across each capacitor?

▶ FIGURE 24

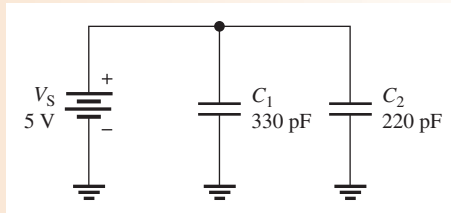

Solution The total capacitance is

$$C_T = C_1 + C_2 = 330\text{ pF} + 220\text{ pF} = \mathbf{550\ pF}$$

The voltage across each capacitor in parallel is equal to the source voltage.

$$V_S = V_1 = V_2 = \mathbf{5\ V}$$

Related Problem What is C_T if a 100 pF capacitor is connected in parallel with C_1 and C_2 in Figure 24?

General Formula Equation 10 can be extended to any number of capacitors in parallel, as shown in Figure 25. The expanded formula is as follows; the subscript n can be any number.

Equation 11

$$C_T = C_1 + C_2 + C_3 + \cdots + C_n$$

▶ FIGURE 25

General circuit with n capacitors in parallel.

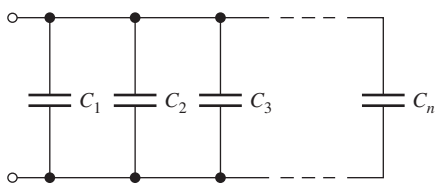

EXAMPLE 9

Determine C_T in Figure 26.

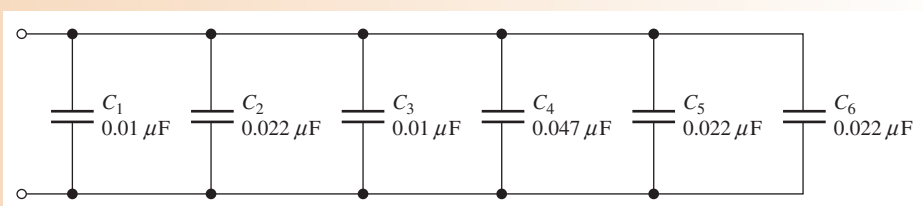

▲ FIGURE 26

Solution

$$\begin{aligned} C_T &= C_1 + C_2 + C_3 + C_4 + C_5 + C_6 \\ &= 0.01\ \mu\text{F} + 0.022\ \mu\text{F} + 0.01\ \mu\text{F} + 0.047\ \mu\text{F} + 0.022\ \mu\text{F} + 0.022\ \mu\text{F} \\ &= \mathbf{0.133\ \mu F} \end{aligned}$$

Related Problem If three more 0.01 μF capacitors are connected in parallel in Figure 26, what is C_T?

www.EngineeringBooksPdf.com

SECTION 4 CHECKUP

1. How is total parallel capacitance determined?
2. In a certain application, you need 0.05 μF. The only capacitor value available is 0.01 μF, and this capacitor is available in large quantities. How can you get the total capacitance that you need?
3. The following capacitors are in parallel: 10 pF, 56 pF, 33 pF, and 68 pF. What is C_T?

5 CAPACITORS IN DC CIRCUITS

A capacitor will charge up when it is connected to a dc voltage source. The buildup of charge across the plates occurs in a predictable manner that is dependent on the capacitance and the resistance in a circuit.

After completing this section, you should be able to

- **Describe how a capacitor operates in a dc switching circuit**
  - Describe the charging and discharging of a capacitor
  - Define *RC time constant*
  - Relate the time constant to charging and discharging
  - Write equations for the charging and discharging curves
  - Explain why a capacitor blocks constant dc

Charging a Capacitor

A capacitor will charge when it is connected to a dc voltage source, as shown in Figure 27. The capacitor in part (a) is uncharged; that is, plate *A* and plate *B* have equal numbers of free electrons. When the switch is closed, as shown in part (b), the source moves electrons away from plate *A* through the circuit to plate *B* as the arrows indicate. As plate *A* loses electrons and plate *B* gains electrons, plate *A* becomes positive with respect to plate *B*. As this **charging** process continues, the voltage across the plates builds up rapidly until it is equal to the source voltage, V_S, but opposite in polarity, as shown in part (c). When the capacitor is fully charged, there is no current.

A capacitor blocks constant dc.

When the charged capacitor is disconnected from the source, as shown in Figure 27(d), it remains charged for long periods of time, depending on its leakage resistance. The charge on an electrolytic capacitor generally leaks off more rapidly than in other types of capacitors.

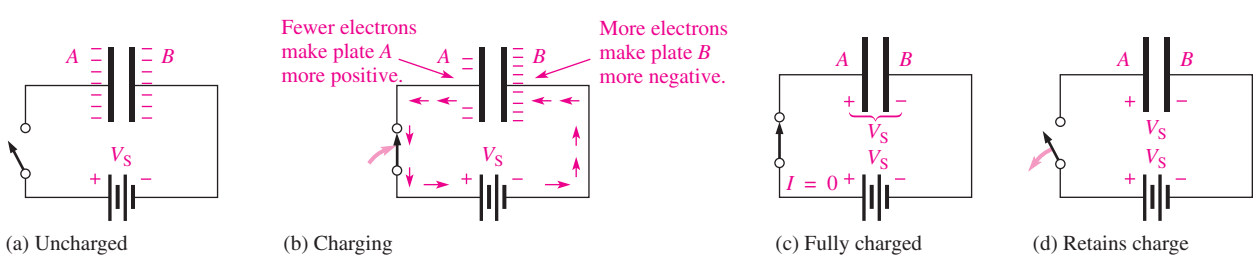

▲ FIGURE 27

Charging a capacitor.

www.EngineeringBooksPdf.com

Discharging a Capacitor

When a conductor is connected across a charged capacitor, as shown in Figure 28, the capacitor will discharge. In this particular case, a very low resistance path (the conductor) is connected across the capacitor with a switch. Before the switch is closed, the capacitor is charged to 50 V, as indicated in part (a). When the switch is closed, as shown in part (b), the excess electrons on plate *B* move through the circuit to plate *A* (indicated by the arrows); as a result of the current through the low resistance of the conductor, the energy stored by the capacitor is dissipated in the resistance of the conductor. The charge is neutralized when the numbers of free electrons on both plates are again equal. At this time, the voltage across the capacitor is zero, and the capacitor is completely discharged, as shown in part (c).

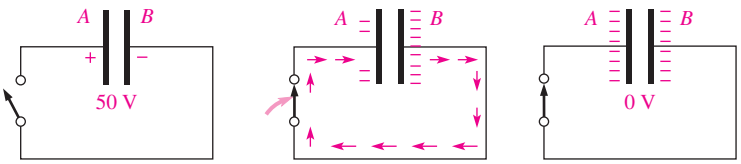

(a) Retains charge (b) Discharging (c) Uncharged

▶ **FIGURE 28**

Discharging a capacitor.

Current and Voltage During Charging and Discharging

Notice in Figures 27 and 28 that the direction of electron flow during discharge is opposite to that during charging. It is important to understand that, ideally, *there is no current through the dielectric of the capacitor during charging or discharging because the dielectric is an insulating material.* There is current from one plate to the other only through the external circuit.

Figure 29(a) shows a capacitor connected in series with a resistor and a switch to a dc voltage source. Initially, the switch is open and the capacitor is uncharged with zero volts

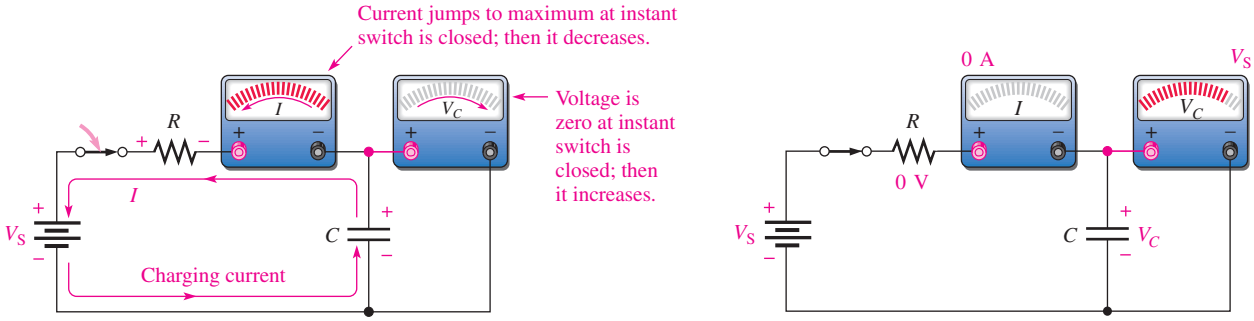

(a) Charging: Capacitor voltage increases as the current and resistor voltage decrease.

(b) Fully charged: Capacitor voltage equals source voltage. The current is zero.

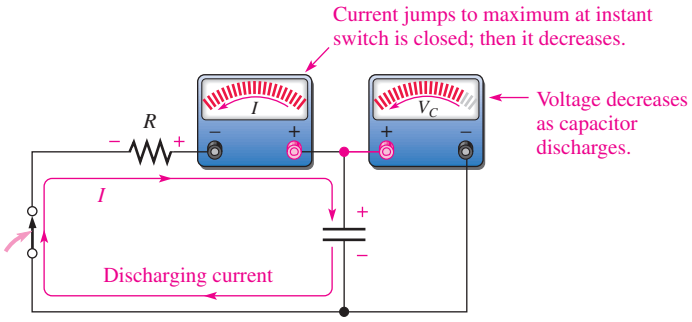

(c) Discharging: Capacitor voltage, resistor voltage, and the current decrease from their initial maximum values. Note that the discharge current is opposite to the charge current.

▲ **FIGURE 29**

Current and voltage in a charging and discharging capacitor.

www.EngineeringBooksPdf.com

across its plates. At the instant the switch is closed, the current jumps to its maximum value and the capacitor begins to charge. The current is maximum initially because the capacitor has zero volts across it and, therefore, effectively acts as a short; thus, the current is limited only by the resistance. As time passes and the capacitor charges, the current decreases and the voltage across the capacitor (V_C) increases. The resistor voltage is proportional to the current during this charging period.

After a certain period of time, the capacitor reaches full charge. At this point, the current is zero and the capacitor voltage is equal to the dc source voltage, as shown in Figure 29(b). If the switch were opened now, the capacitor would retain its full charge (neglecting any leakage).

In Figure 29(c), the voltage source has been removed. When the switch is closed, the capacitor begins to discharge. Initially, the current jumps to a maximum but in a direction opposite to its direction during charging. As time passes, the current and capacitor voltage decrease. The resistor voltage is always proportional to the current. When the capacitor has fully discharged, the current and the capacitor voltage are zero.

Remember these two rules about capacitors in dc circuits:

1. A capacitor appears as an *open* to constant voltage.
2. A capacitor appears as a *short* to an instantaneous change in voltage.

Now let's examine in more detail how the voltage and current change with time in a capacitive circuit.

SAFETY NOTE

Capacitors can store charge for a long time after power has been turned off. Be careful when touching or handling capacitors in or out of a circuit. If you touch the leads, you may be in for a shock as the capacitor discharges through you! It is good practice to discharge a capacitor using a shorting tool with an insulated grip before handling the capacitor.

The *RC* Time Constant

In a practical situation, there cannot be capacitance without some resistance in a circuit. It may simply be the small resistance of a wire, or it may be a designed-in resistance. Because of this, the charging and discharging characteristics of a capacitor must always be considered with the associated series resistance included. The resistance introduces the element of *time* in the charging and discharging of a capacitor.

When a capacitor charges or discharges through a resistance, a certain time is required for the capacitor to charge fully or discharge fully. The voltage across a capacitor cannot change instantaneously because a finite time is required to move charge from one point to another. The time constant of a series *RC* circuit determines the rate at which the capacitor charges or discharges.

The *RC* time constant is a fixed time interval that equals the product of the resistance and the capacitance in a series *RC* circuit.

The time constant is expressed in units of seconds when resistance is in ohms and capacitance is in farads. It is symbolized by τ (Greek letter tau), and the formula is

$$\tau = RC$$ Equation 12

Recall that $I = Q/t$. The current depends on the amount of charge moved in a given time. When the resistance is increased, the charging current is reduced, thus increasing the charging time of the capacitor. When the capacitance is increased, the amount of charge increases; thus, for the same current, more time is required to charge the capacitor.

EXAMPLE 10

A series *RC* circuit has a resistance of 1.0 MΩ and a capacitance of 4.7 μF. What is the time constant?

Solution

$$\tau = RC = (1.0 \times 10^6\ \Omega)(4.7 \times 10^{-6}\ \text{F}) = \mathbf{4.7\ s}$$

Related Problem

A series *RC* circuit has a 270 kΩ resistor and a 3300 pF capacitor. What is the time constant in μs?

www.EngineeringBooksPdf.com

When a capacitor is charging or discharging between two voltage levels, the charge on the capacitor changes by approximately 63% of the difference in the levels in one time constant. An uncharged capacitor charges to approximately 63% of its fully charged voltage in one time constant. When a fully charged capacitor is discharging, its voltage drops to approximately 100% − 63% = 37% of its initial voltage in one time constant. This change also corresponds to a 63% change.

The Charging and Discharging Curves

A capacitor charges and discharges following a nonlinear curve, as shown in Figure 30. In these graphs, the approximate percentage of full charge is shown at each time-constant interval. This type of curve follows a precise mathematical formula and is called an **exponential** curve. The charging curve is an increasing exponential, and the discharging curve is a decreasing exponential. It takes five time constants to reach 99% (considered 100%) of the final voltage. This five time-constant interval is generally accepted as the time to fully charge or discharge a capacitor and is called the **transient time**.

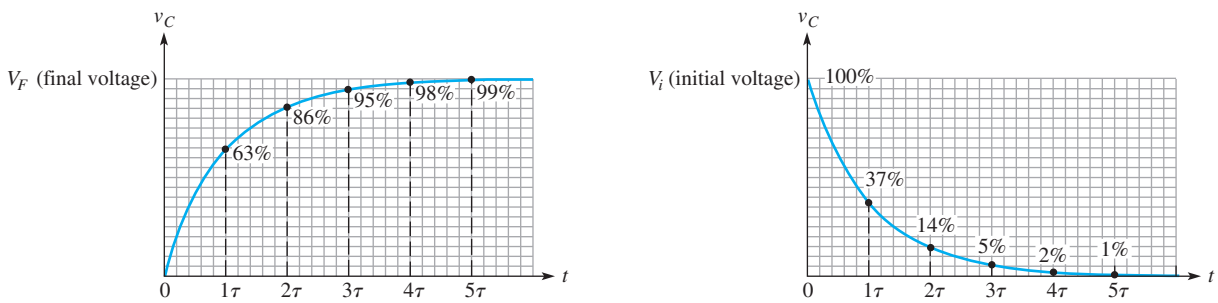

(a) Charging curve with percentages of the final voltage

(b) Discharging curve with percentages of the initial voltage

▲ **FIGURE 30**

Exponential voltage curves for the charging and discharging of a capacitor in an *RC* circuit.

General Formula The general expressions for either increasing or decreasing exponential curves are given in the following equations for both instantaneous voltage and current:

Equation 13

$$v = V_F + (V_i - V_F)e^{-t/\tau}$$

Equation 14

$$i = I_F + (I_i - I_F)e^{-t/\tau}$$

where V_F and I_F are the final values of voltage and current and V_i and I_i are the initial values of voltage and current. The lowercase italic letters v and i are the instantaneous values of the capacitor voltage and current at time t, and e is the base of natural logarithms. The e^x key on a calculator makes it easy to work with this exponential term.

Charging from Zero The formula for the special case in which an increasing exponential voltage curve begins at zero ($V_i = 0$), as shown in Figure 30(a), is given in Equation 15. It is developed as follows, starting with the general formula, Equation 13.

$$v = V_F + (V_i - V_F)e^{-t/\tau} = V_F + (0 - V_F)e^{-t/RC} = V_F - V_F e^{-t/RC}$$

Factoring out V_F, you have

Equation 15

$$v = V_F(1 - e^{-t/RC})$$

Using Equation 15, you can calculate the value of the charging voltage of a capacitor at any instant of time if it is initially uncharged. You can calculate an increasing current by substituting i for v and I_F for V_F in Equation 15.

www.EngineeringBooksPdf.com

EXAMPLE 11

In Figure 31, determine the capacitor voltage 50 μs after the switch is closed if the capacitor initially is uncharged. Draw the charging curve.

▶ **FIGURE 31**

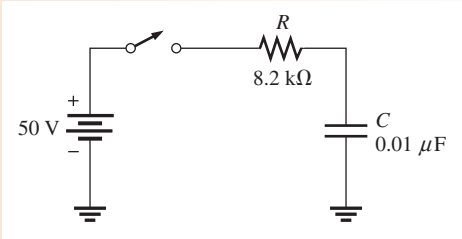

Solution The time constant is

$$\tau = RC = (8.2\ \text{k}\Omega)(0.01\ \mu\text{F}) = 82\ \mu\text{s}$$

The voltage to which the capacitor will fully charge is 50 V (this is V_F). The initial voltage is zero. Notice that 50 μs is less than one time constant; so the capacitor will charge less than 63% of the full voltage in that time.

$$v_C = V_F(1 - e^{-t/RC}) = (50\ \text{V})(1 - e^{-50\mu\text{s}/82\mu\text{s}}) = \mathbf{22.8\ V}$$

The charging curve for the capacitor is shown in Figure 32.

▶ **FIGURE 32**

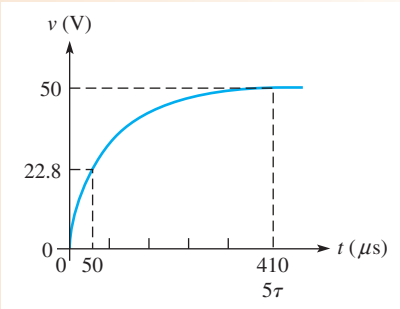

Related Problem Determine the capacitor voltage 15 μs after the switch is closed in Figure 31.

Discharging to Zero The formula for the special case in which a decreasing exponential voltage curve ends at zero ($V_F = 0$), as shown in Figure 30(b), is derived from the general formula as follows:

$$v = V_F + (V_i - V_F)e^{-t/\tau} = 0 + (V_i - 0)e^{-t/RC}$$

This reduces to

$$\boldsymbol{v = V_i e^{-t/RC}} \qquad \textbf{Equation 16}$$

where V_i is the voltage at the beginning of the discharge. You can use this formula to calculate the discharging voltage at any instant. The exponent $-t/RC$ can also be written as $-t/\tau$.

www.EngineeringBooksPdf.com

EXAMPLE 12

Determine the capacitor voltage in Figure 33 at a point in time 6 ms after the switch is closed. Draw the discharging curve.

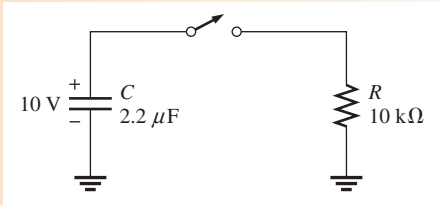

▲ FIGURE 33

Solution The discharge time constant is

$$\tau = RC = (10\,\text{k}\Omega)(2.2\,\mu\text{F}) = 22\,\text{ms}$$

The initial capacitor voltage is 10 V. Notice that 6 ms is less than one time constant, so the capacitor will discharge less than 63%. Therefore, it will have a voltage greater than 37% of the initial voltage at 6 ms.

$$v_C = V_i e^{-t/RC} = (10\,\text{V})e^{-6\text{ms}/22\text{ms}} = \mathbf{7.61\ V}$$

The discharging curve for the capacitor is shown in Figure 34.

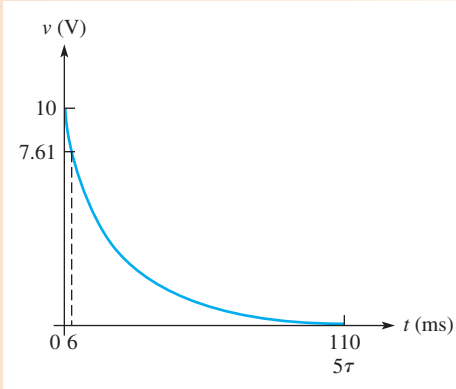

▲ FIGURE 34

Related Problem In Figure 33, change R to 2.2 kΩ and determine the capacitor voltage 1 ms after the switch is closed.

Graphical Method Using Universal Exponential Curves The universal curves in Figure 35 provide a graphic solution of the charge and discharge of capacitors. Example 13 illustrates this graphical method.

www.EngineeringBooksPdf.com

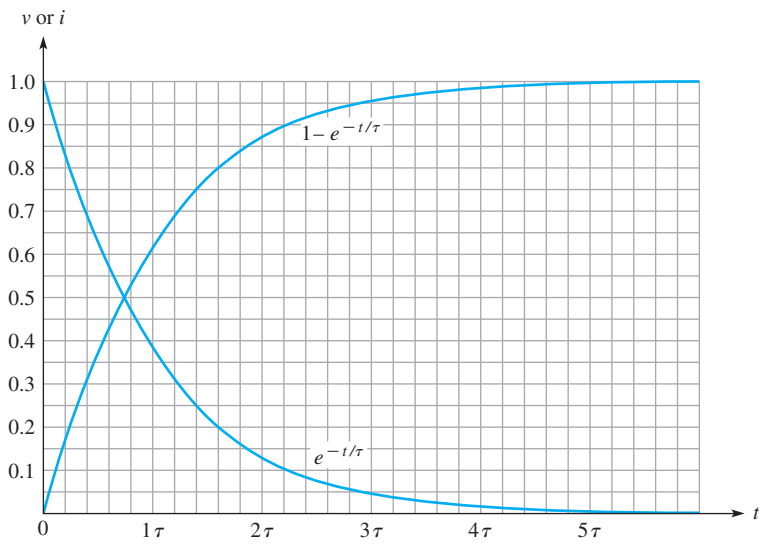

FIGURE 35

Normalized universal exponential curves.

EXAMPLE 13

How long will it take the capacitor in Figure 36 to charge to 75 V? What is the capacitor voltage 2 ms after the switch is closed? Use the normalized universal curves in Figure 35 to determine the answers.

FIGURE 36

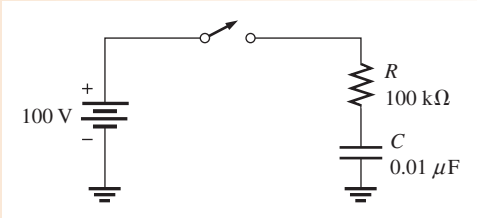

Solution The final voltage is 100 V, which is the 100% level (1.0) on the graph. The value 75 V is 75% of the maximum, or 0.75 on the graph. You can see that this value occurs at 1.4 time constants. In this circuit one time constant is $RC = (100\,\text{k}\Omega)(0.01\,\mu\text{F}) = 1$ ms. Therefore, the capacitor voltage reaches 75 V at 1.4 ms after the switch is closed.

The capacitor is at approximately 86 V (0.86 on the vertical axis) in 2 ms. These graphic solutions are shown in Figure 37.

FIGURE 37

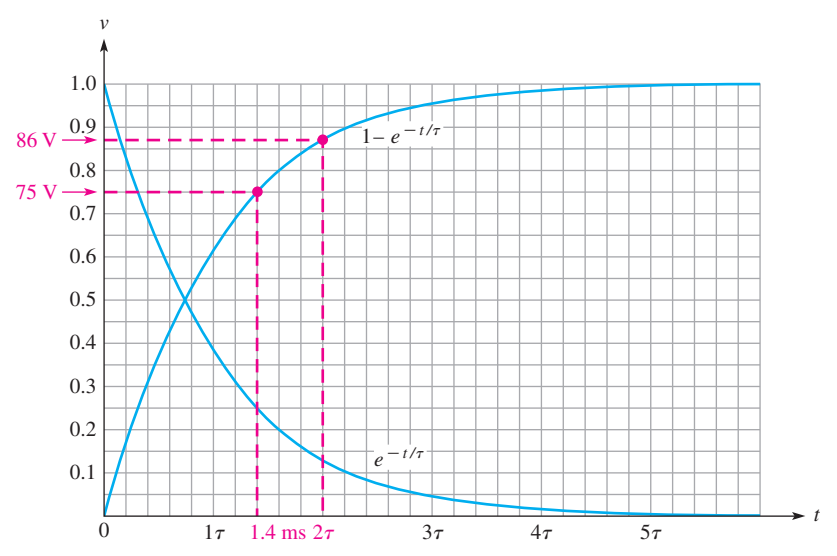

www.EngineeringBooksPdf.com

Related Problem Using the normalized universal exponential curves, determine how long it will take the capacitor in Figure 36 to charge to 50 V from zero. What is the capacitor voltage 3 ms after switch closure?

Response to a Square Wave

A common case that illustrates the rising and falling exponential occurs when an *RC* circuit is driven with a square wave that has a long period compared to the time constant. The square wave provides on and off action but, unlike a single switch, it provides a discharge path back through the generator when the wave drops back to zero.

When the square wave rises, the voltage across the capacitor rises exponentially toward the maximum value of the square wave in a time that depends on the time constant. When the square wave returns to the zero level, the capacitor voltage decreases exponentially, again depending on the time constant. The internal resistance of the square wave generator is part of the *RC* time constant; however, it can be ignored if it is small compared to *R*. The following example shows the waveforms for the case where the period is long compared to the time constant.

EXAMPLE 14

For the circuit in Figure 38(a), calculate the voltage across the capacitor every 0.1 ms for one complete period of the input waveform shown in Figure 38(b). Then sketch the capacitor waveform. Assume the internal resistance of the generator is negligible.

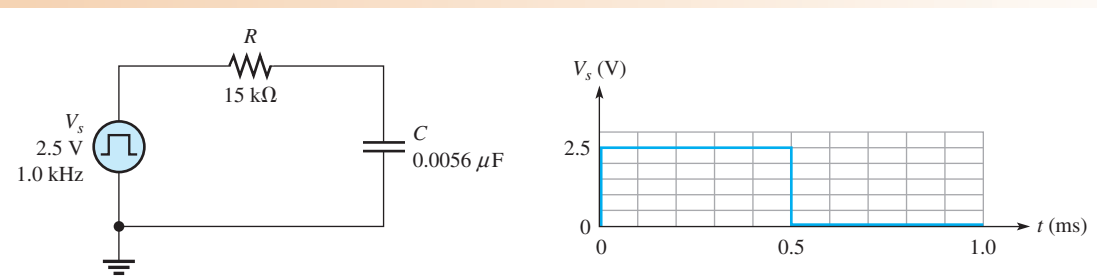

▲ FIGURE 38

Solution

$$\tau = RC = (15\ \text{k}\Omega)(0.0056\ \mu\text{F}) = 0.084\ \text{ms}$$

The period of the square wave is 1 ms, which is approximately 12τ. This means that 6τ will elapse after each change of the pulse, allowing the capacitor to fully charge and fully discharge.

For the increasing exponential,

$$v = V_F(1 - e^{-t/RC}) = V_F(1 - e^{-t/\tau})$$

At 0.1 ms: $v = 2.5\ \text{V}(1 - e^{-0.1\text{ms}/0.084\text{ms}}) = 1.74\ \text{V}$

At 0.2 ms: $v = 2.5\ \text{V}(1 - e^{-0.2\text{ms}/0.084\text{ms}}) = 2.27\ \text{V}$

At 0.3 ms: $v = 2.5\ \text{V}(1 - e^{-0.3\text{ms}/0.084\text{ms}}) = 2.43\ \text{V}$

At 0.4 ms: $v = 2.5\ \text{V}(1 - e^{-0.4\text{ms}/0.084\text{ms}}) = 2.48\ \text{V}$

At 0.5 ms: $v = 2.5\ \text{V}(1 - e^{-0.5\text{ms}/0.084\text{ms}}) = 2.49\ \text{V}$

For the decreasing exponential,

$$v = V_i(e^{-t/RC}) = V_i(e^{-t/\tau})$$

www.EngineeringBooksPdf.com

In the equation, time is shown from the point when the change occurs (subtracting 0.5 ms from the actual time). For example, at 0.6 ms, $t = 0.6\text{ ms} - 0.5\text{ ms} = 0.1\text{ ms}$.

At 0.6 ms: $v = 2.5\text{ V}(e^{-0.1\text{ms}/0.084\text{ms}}) = 0.76\text{ V}$

At 0.7 ms: $v = 2.5\text{ V}(e^{-0.2\text{ms}/0.084\text{ms}}) = 0.23\text{ V}$

At 0.8 ms: $v = 2.5\text{ V}(e^{-0.3\text{ms}/0.084\text{ms}}) = 0.07\text{ V}$

At 0.9 ms: $v = 2.5\text{ V}(e^{-0.4\text{ms}/0.084\text{ms}}) = 0.02\text{ V}$

At 1.0 ms: $v = 2.5\text{ V}(e^{-0.5\text{ms}/0.084\text{ms}}) = 0.01\text{ V}$

Figure 39 is a graph of these results.

▶ FIGURE 39

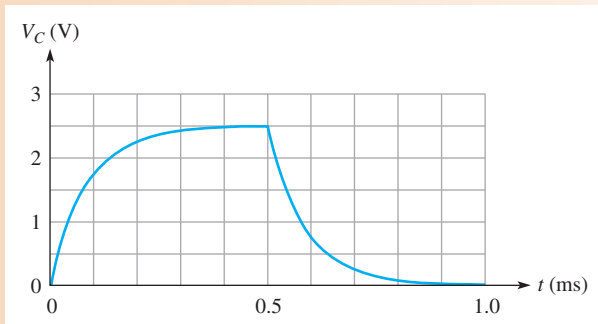

Related Problem What is the capacitor voltage at 0.65 ms?

SECTION 5 CHECKUP

1. Determine the time constant when $R = 1.2\text{ k}\Omega$ and $C = 1000\text{ pF}$.
2. If the circuit in Question 1 is charged with a 5 V source, how long will it take the initially uncharged capacitor to reach full charge? At full charge, what is the capacitor voltage?
3. A certain circuit has a time constant of 1 ms. If it is charged with a 10 V battery, what will the capacitor voltage be at each of the following times: 2 ms, 3 ms, 4 ms, and 5 ms? The capacitor is initially uncharged.
4. A capacitor is charged to 100 V. If it is discharged through a resistor, what is the capacitor voltage at one time constant?

6 CAPACITORS IN AC CIRCUITS

As you know, a capacitor blocks constant dc. A capacitor passes ac with an amount of opposition, called capacitive reactance, that depends on the frequency of the ac.

After completing this section, you should be able to

- **Describe how a capacitor operates in an ac circuit**
  - Define *capacitive reactance*
  - Determine the value of capacitive reactance in a given circuit
  - Calculate the capacitance for series and parallel capacitors
  - Explain why a capacitor causes a phase shift between voltage and current
  - Discuss instantaneous, true, and reactive power in a capacitor

www.EngineeringBooksPdf.com

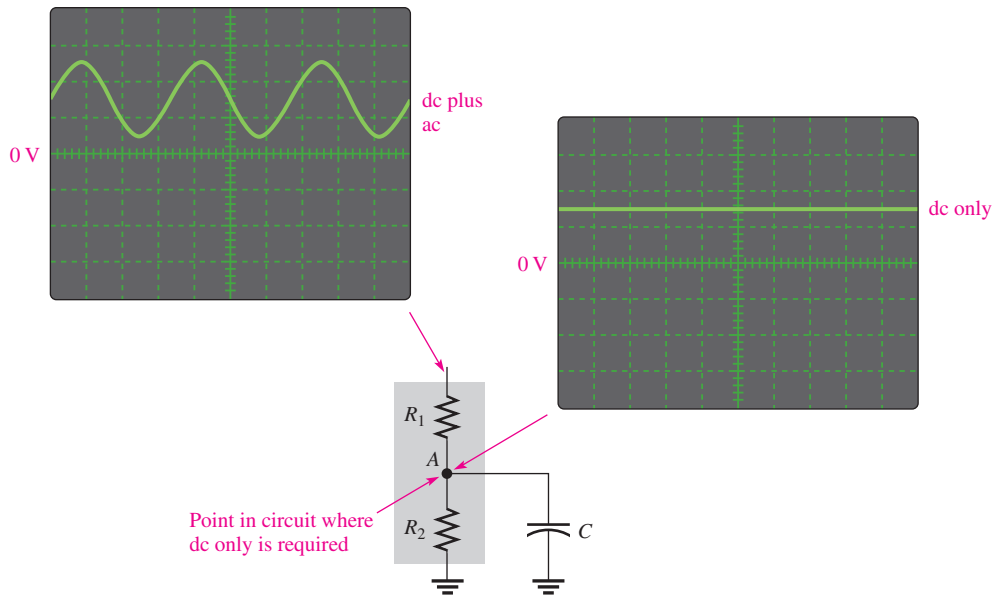

▲ FIGURE 56

Example of the operation of a bypass capacitor.

The main characteristic of a filter is its frequency selectivity, which is based on the fact that the reactance of a capacitor depends on frequency ($X_C = 1/2\pi fC$).

Timing Circuits

Another important area in which capacitors are used is in timing circuits that generate specified time delays or produce waveforms with specific characteristics. Recall that the time constant of a circuit with resistance and capacitance can be controlled by selecting appropriate values for R and C. The charging time of a capacitor can be used as a basic time delay in various types of circuits. An example is the circuit that controls the turn indicators on your car where the light flashes on and off at regular intervals.

Computer Memories

Dynamic computer memories use capacitors as the basic storage element for binary information, which consists of two digits, 1 and 0. A charged capacitor can represent a stored 1 and a discharged capacitor can represent a stored 0. Patterns of 1s and 0s that make up binary data are stored in a memory that consists of an array of capacitors with associated circuitry. You will study this topic in a computer or digital fundamentals course.

SECTION 7 CHECKUP

1. Explain how half-wave or full-wave rectified dc voltages are smoothed out by a filter capacitor.
2. Explain the purpose of a coupling capacitor.
3. How large must a coupling capacitor be?
4. Explain the purpose of a decoupling capacitor.
5. Discuss how the relationship of frequency and capacitive reactance is important in frequency-selective circuits such as signal filters.

www.EngineeringBooksPdf.com

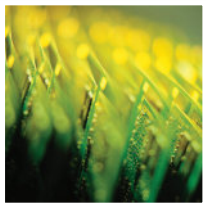

Application Assignment

PUTTING YOUR KNOWLEDGE TO WORK

As you learned in this chapter, capacitors are used in certain types of amplifiers for coupling ac signals and blocking dc voltages. In this assignment, an amplifier circuit board contains two coupling capacitors. Your assignment is to check certain voltages on three identical amplifier circuit boards to determine if the capacitors are working properly. A knowledge of amplifier circuits is not necessary for this assignment.

All amplifier circuits contain transistors that require dc voltages to establish proper operating conditions for amplifying ac signals. These dc voltages are referred to as bias voltages. As indicated in Figure 57(a), a common type of dc bias circuit used in amplifiers is the voltage divider formed by R_1 and R_2, which sets up the proper dc voltage at the input to the amplifier.

When an ac signal voltage is applied to the amplifier, the input coupling capacitor, C_1, prevents the internal resistance of the ac source from changing the dc bias voltage. Without the capacitor, the internal source resistance would appear in parallel with R_2 and drastically change the value of the dc voltage.

The coupling capacitance is chosen so that its reactance (X_C) at the frequency of the ac signal is very small compared to the bias resistor values. The coupling capacitance, therefore, efficiently couples the ac signal from the source to the input of the amplifier. On the source side of the input coupling capacitor there is only ac but on the amplifier side there is ac plus dc (the signal voltage is riding on the dc bias voltage set by the voltage divider), as indicated in Figure 57(a). Capacitor C_2 is the output coupling capacitor, which couples the amplified ac signal to another amplifier stage that would be connected to the output.

You will check three amplifier boards like the one in Figure 57(b) for the proper input voltages using an oscilloscope. If the voltages are incorrect, you will determine the most likely fault. For all measurements, assume the amplifier has no dc loading effect on the voltage-divider bias circuit.

Step 1: Comparing the Printed Circuit Board with the Schematic

Check the printed circuit board in Figure 57(b) to make sure it agrees with the amplifier schematic in part (a).

Step 2: Testing the Input to Board 1

The oscilloscope probe is connected from channel 1 to the board as shown in Figure 58.

The input signal from a sinusoidal voltage source is connected to the board and set to a frequency of 5 kHz with an amplitude of 1 V rms. Determine if the voltage and frequency displayed on the scope in Figure 58 are correct. If the scope measurement is incorrect, specify the most likely fault in the circuit.

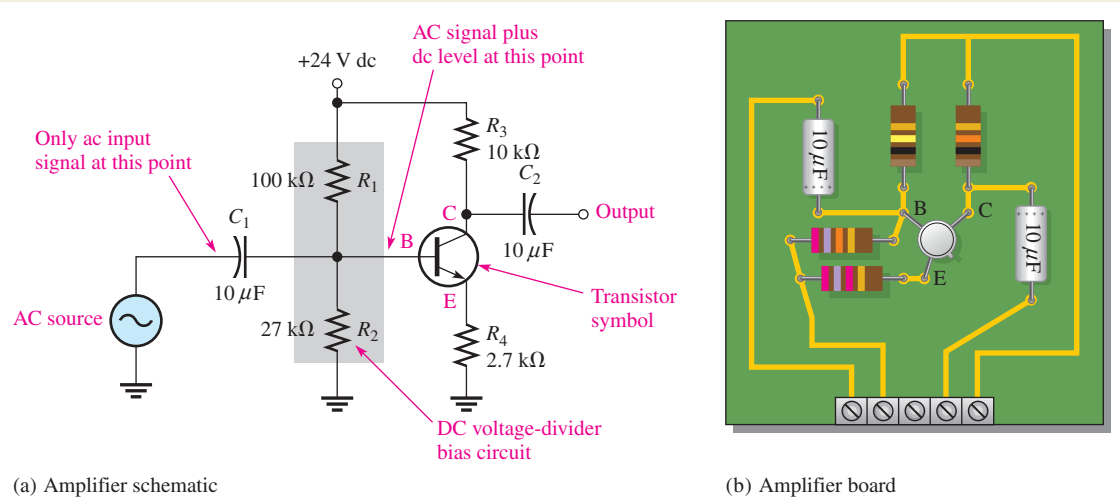

(a) Amplifier schematic

(b) Amplifier board

▲ FIGURE 57

Capacitively coupled amplifier.

www.EngineeringBooksPdf.com

Capacitive Reactance, X_C

In Figure 40, a capacitor is shown connected to a sinusoidal voltage source. When the source voltage is held at a constant amplitude value and its frequency is increased, the amplitude of the current increases. Also, when the frequency of the source is decreased, the current amplitude decreases.

▶ **FIGURE 40**

The current in a capacitive circuit varies directly with the frequency of the source voltage.

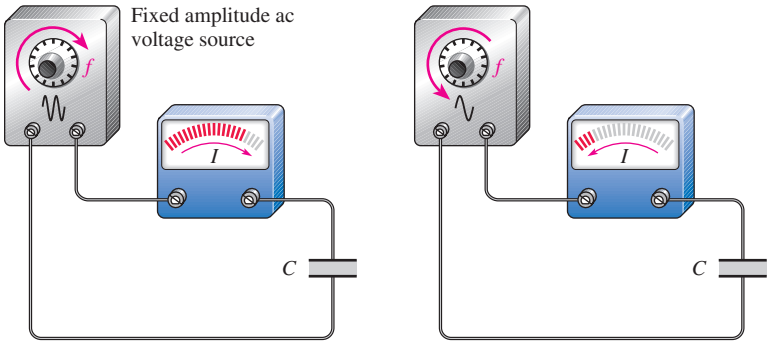

(a) Current increases when the frequency increases.

(b) Current decreases when the frequency decreases.

When the frequency of the voltage increases, its rate of change also increases. This relationship is illustrated in Figure 41, where the frequency is doubled. Now, if the rate at which the voltage is changing increases, the amount of charge moving through the circuit in a given period of time must also increase. More charge in a given period of time means more current. For example, a tenfold increase in frequency means that the capacitor is charging and discharging 10 times as much in a given time interval. The rate of charge movement has increased 10 times. This means the current has increased by 10 because $I = Q/t$.

▶ **FIGURE 41**

Rate of change of a sine wave increases when frequency increases.

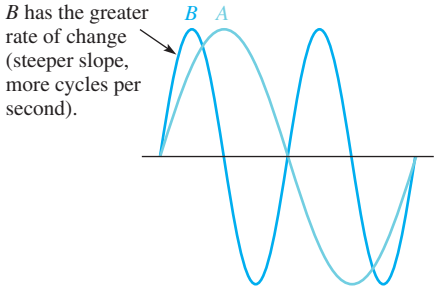

An increase in the amount of current with a fixed amount of voltage indicates that opposition to the current has decreased. Therefore, the capacitor offers opposition to current, and that opposition varies *inversely* with frequency.

The opposition to sinusoidal current in a capacitor is called capacitive reactance.

The symbol for capacitive reactance is X_C, and its unit is the ohm (Ω).

You have just seen how frequency affects the opposition to current (capacitive reactance) in a capacitor. Now let's see how the capacitance (C) itself affects the reactance. Figure 42(a) shows that when a sinusoidal voltage with a fixed amplitude and fixed frequency is applied to a 1 μF capacitor, there is a certain amount of alternating current. When the capacitance value is increased to 2 μF, the current increases, as shown in Figure 42(b). Thus, when the capacitance is increased, the opposition to current (capacitive reactance) decreases. Therefore, not only is the capacitive reactance *inversely* proportional to frequency, but it is also *inversely* proportional to capacitance. This relationship can be stated as follows:

X_C is proportional to $\frac{1}{fC}$.

www.EngineeringBooksPdf.com

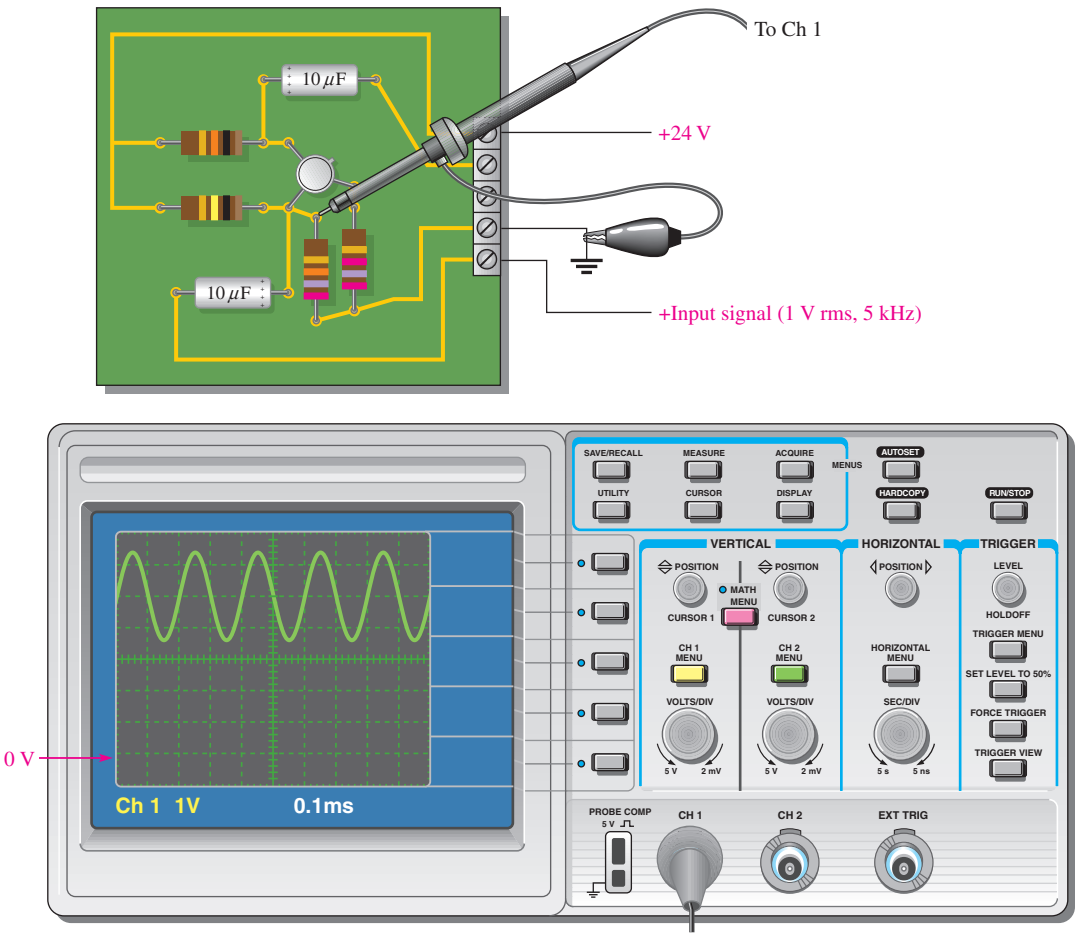

Note: Ground reference has been established as indicated by 0 V.

▲ **FIGURE 58**

Testing board 1.

Step 3: Testing the Input to Board 2

The oscilloscope probe is connected from channel 1 to board 2 the same as was shown in Figure 58 for board 1.

The input signal from the sinusoidal voltage source is the same as Step 2. Determine if the scope display in Figure 59 is correct. If the scope measurement is incorrect, specify the most likely fault in the circuit.

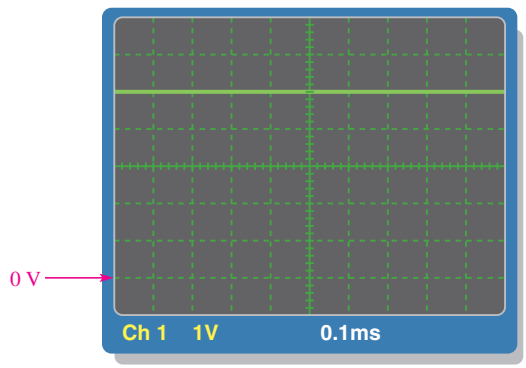

Note: Ground reference has been established as indicated by 0 V.

▲ **FIGURE 59**

Testing board 2.

www.EngineeringBooksPdf.com

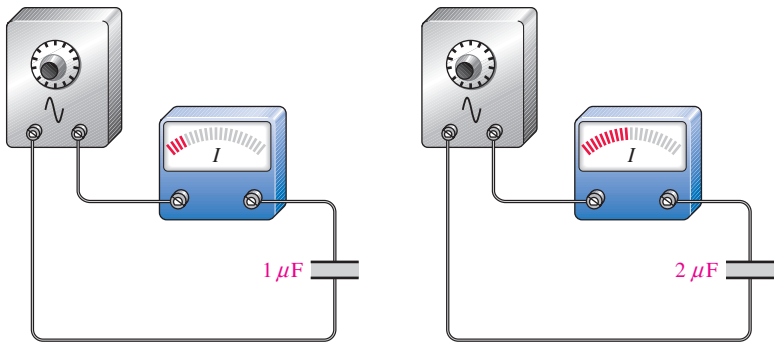

(a) Less capacitance, less current (b) More capacitance, more current

◀ **FIGURE 42**

For a fixed voltage and fixed frequency, the current varies directly with the capacitance value.

It can be proven that the constant of proportionality that relates X_C to $1/fC$ is $1/2\pi$. Therefore, the formula for capacitive reactance (X_C) is

$$X_C = \frac{1}{2\pi fC}$$ **Equation 17**

X_C is in ohms when f is in hertz and C is in farads. The 2π term comes from the fact that, a sine wave can be described in terms of rotational motion, and one revolution contains 2π radians.

EXAMPLE 15

A sinusoidal voltage is applied to a capacitor, as shown in Figure 43. The frequency of the sine wave is 1.0 kHz. Determine the capacitive reactance.

▶ **FIGURE 43**

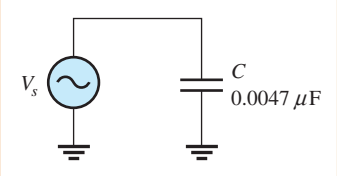

Solution

$$X_C = \frac{1}{2\pi fC} = \frac{1}{2\pi(1.0 \times 10^3\ \text{Hz})\,(0.0047 \times 10^{-6}\ \text{F})} = \mathbf{33.9\ k\Omega}$$

Related Problem Determine the frequency required to make the capacitive reactance in Figure 43 equal to 10 kΩ.

Reactance for Series Capacitors

When capacitors are in series in an ac circuit, the total capacitance is smaller than the smallest individual capacitance. Because the total capacitance is smaller, the total capacitive reactance (opposition to current) must be larger than any individual capacitive reactance. With series capacitors, the total capacitive reactance ($X_{C(tot)}$) is the sum of the individual reactances.

$$X_{C(tot)} = X_{C1} + X_{C2} + X_{C3} + \cdots + X_{Cn}$$ **Equation 18**

Compare this formula with an equation for finding the total resistance of series resistors. In both cases, you simply add the individual oppositions.

www.EngineeringBooksPdf.com

Step 4: Testing the Input to Board 3

The oscilloscope probe is connected from channel 1 to board 3 the same as was shown in Figure 58 for board 1.

The input signal from the sinusoidal voltage source is the same as Step 3. Determine if the scope display in Figure 60 is correct. If the scope measurement is incorrect, specify the most likely fault in the circuit.

Review

1. Explain why the input coupling capacitor is necessary when one connects an ac source to the amplifier.
2. Capacitor C_2 in Figure 57 is an output coupling capacitor. Generally, what would you expect to measure at the point in the circuit labeled C and at the output of the circuit when an input signal is applied to the amplifier?

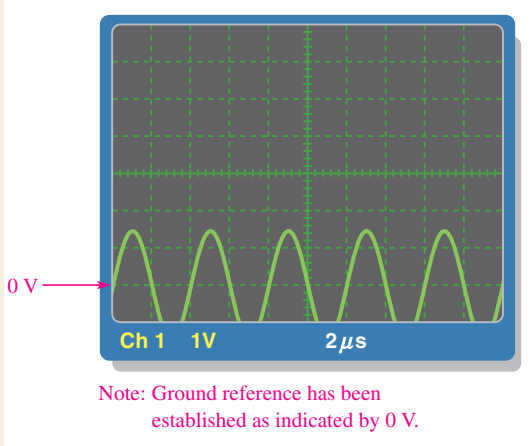

▲ FIGURE 60

Testing board 3.

SUMMARY

- A capacitor is composed of two parallel conductive plates separated by an insulating material called the *dielectric.*
- A capacitor stores electrical charge on its plates.
- Energy is stored in a capacitor by the electric field created between the charged plates in the dielectric.
- Capacitance is measured in units of farads (F).
- Capacitance is directly proportional to the plate area and the dielectric constant and inversely proportional to the distance between the plates (the dielectric thickness).
- The dielectric constant is an indication of the ability of a material to establish an electric field.
- The dielectric strength is one factor that determines the breakdown voltage of a capacitor.
- Capacitors are commonly classified according to the dielectric material. Typical materials are mica, ceramic, plastic-film, and electrolytic (aluminum oxide and tantalum oxide).
- The total capacitance of series capacitors is less than the smallest capacitance.
- The total capacitance of parallel capacitors is the sum of all the capacitances.
- A capacitor blocks constant dc.
- The time constant determines the charging and discharging time of a capacitor with resistance in series.
- In an *RC* circuit, the voltage and current during charging and discharging make an approximate 63% change during each time-constant interval.
- Five time constants are required for a capacitor to fully charge or discharge. This is called the *transient time.*
- The approximate percentage of final charge after each charging time-constant interval is given in Table 4.
- The approximate percentage of initial charge after each discharging time-constant interval is given in Table 5.
- Alternating current in a capacitor leads the voltage by 90°.
- A capacitor passes ac to an extent that depends on its reactance and the resistance in the rest of the circuit.

www.EngineeringBooksPdf.com

Reactance for Parallel Capacitors

In ac circuits with parallel capacitors, the total capacitance is the sum of the capacitances. Recall that the capacitive reactance is inversely proportional to the capacitance. Because the total parallel capacitance is larger than any individual capacitances, the total capacitive reactance must be smaller than the reactance of any individual capacitor. With parallel capacitors, the total reactance is found by

Equation 19

$$X_{C(tot)} = \frac{1}{\frac{1}{X_{C1}} + \frac{1}{X_{C2}} + \frac{1}{X_{C3}} + \cdots + \frac{1}{X_{Cn}}}$$

Compare this formula with an equation for parallel resistors. As in the case of parallel resistors, the total opposition (resistance or reactance) is the reciprocal of the sum of the reciprocals of the individual oppositions.

For two capacitors in parallel, Equation 19 can be reduced to the product-over-sum form. This is useful because, for most practical circuits, more than two capacitors in parallel is not common.

$$X_{C(tot)} = \frac{X_{C1}X_{C2}}{X_{C1} + X_{C2}}$$

EXAMPLE 16

What is the total capacitive reactance in each circuit in Figure 44?

▶ **FIGURE 44**

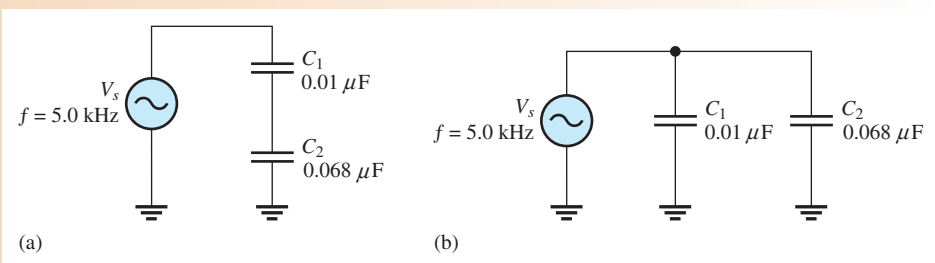

Solution The reactances of the individual capacitors are the same in both circuits.

$$X_{C1} = \frac{1}{2\pi f C_1} = \frac{1}{2\pi(5.0\text{ kHz})(0.01\ \mu\text{F})} = 3.18\text{ k}\Omega$$

$$X_{C2} = \frac{1}{2\pi f C_2} = \frac{1}{2\pi(5.0\text{ kHz})(0.068\ \mu\text{F})} = 468\ \Omega$$

Series Circuit: For the capacitors in series in Figure 44(a), the total reactance is the sum of X_{C1} and X_{C2}, as given in Equation 18.

$$X_{C(tot)} = X_{C1} + X_{C2} = 3.18\text{ k}\Omega + 468\ \Omega = \mathbf{3.65\ k\Omega}$$

Alternatively, you can obtain the total series reactance by first finding the total capacitance using Equation 7. Then substitute that value into Equation 17 to calculate the total reactance.

$$C_{tot} = \frac{C_1C_2}{C_1 + C_2} = \frac{(0.01\ \mu\text{F})(0.068\ \mu\text{F})}{0.01\ \mu\text{F} + 0.068\ \mu\text{F}} = 0.0087\ \mu\text{F}$$

$$X_{C(tot)} = \frac{1}{2\pi f C_{tot}} = \frac{1}{2\pi(5.0\text{ kHz})(0.0087\ \mu\text{F})} = \mathbf{3.65\ k\Omega}$$

www.EngineeringBooksPdf.com

▶ TABLE 4

NUMBER OF TIME CONSTANTS	APPROXIMATE % OF FINAL CHARGE
1	63
2	86
3	95
4	98
5	99 (considered 100%)

▶ TABLE 5

NUMBER OF TIME CONSTANTS	APPROXIMATE % OF INITIAL CHARGE
1	37
2	14
3	5
4	2
5	1 (considered 0)

- Capacitive reactance is the opposition to ac, expressed in ohms.
- Capacitive reactance (X_C) is inversely proportional to the frequency and to the capacitance value.
- The total capacitive reactance of series capacitors is the sum of the individual reactances.
- The total capacitive reactance of parallel capacitors is the reciprocal of the sum of the reciprocals of the individual reactances.
- Ideally, there is no energy loss in a capacitor and, thus, the true power (watts) is zero. However, in most capacitors there is some small energy loss due to leakage resistance.

KEY TERMS

Bypass A capacitor connected from a point to ground to remove the ac signal without affecting the dc voltage. A special case of decoupling.

Capacitance The ability of a capacitor to store electrical charge.

Capacitive reactance The opposition of a capacitor to sinusoidal current. The unit is the ohm.

Capacitor An electrical device consisting of two conductive plates separated by an insulating material and possessing the property of capacitance.

Charging The process in which a current removes charge from one plate of a capacitor and deposits it on the other plate, making one plate more positive than the other.

Coupling The method of connecting a capacitor from between two points in a circuit to allow ac to pass from one point to the other while blocking dc.

Decoupling The method of connecting a capacitor from one point, usually the dc power supply line, to ground to short ac to ground without affecting the dc voltage.

Dielectric The insulating material between the plates of a capacitor.

Dielectric constant A measure of the ability of a dielectric material to establish an electric field.

Dielectric strength A measure of the ability of a dielectric material to withstand voltage without breaking down.

Exponential A mathematical function described by a natural logarithm (base). The charging and discharging of a capacitor are described by an exponential function.

Farad (F) The unit of capacitance.

www.EngineeringBooksPdf.com

Parallel Circuit: For the capacitors in parallel in Figure 44(b), determine the total reactance from the product-over-sum rule using X_{C1} and X_{C2}.

$$X_{C(tot)} = \frac{X_{C1}X_{C2}}{X_{C1} + X_{C2}} = \frac{(3.18\ \text{k}\Omega)(468\ \Omega)}{3.18\ \text{k}\Omega + 468\ \Omega} = 408\ \Omega$$

Related Problem Determine the total parallel capacitive reactance by first finding the total capacitance.

Ohm's Law The reactance of a capacitor is analogous to the resistance of a resistor. In fact, both are expressed in ohms. Since both R and X_C are forms of opposition to current, Ohm's law applies to capacitive circuits as well as to resistive circuits.

$$I = \frac{V}{X_C}$$ **Equation 20**

When applying Ohm's law in ac circuits, you must express both the current and the voltage in the same way, that is, both in rms, both in peak, and so on.

EXAMPLE 17 Determine the rms current in Figure 45.

▶ **FIGURE 45**

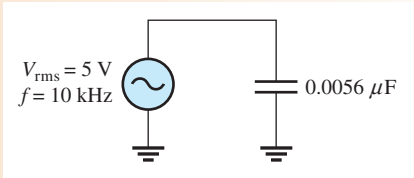

Solution First, find X_C.

$$X_C = \frac{1}{2\pi fC} = \frac{1}{2\pi(10 \times 10^3\ \text{Hz})(0.0056 \times 10^{-6}\ \text{F})} = 2.84\ \text{k}\Omega$$

Then, apply Ohm's law.

$$I_{rms} = \frac{V_{rms}}{X_C} = \frac{5\ \text{V}}{2.84\ \text{k}\Omega} = \mathbf{1.76\ mA}$$

Related Problem Change the frequency in Figure 45 to 25 kHz and determine the rms value of the current.

Open Multisim file E09-17. Measure the rms current and compare with the calculated value. Change the frequency of the source voltage to 25 kHz and measure the current.

Capacitive Voltage Divider

In ac circuits, capacitors can be used in applications that require a voltage divider. (Some oscillator circuits use this method to tap off a fraction of the output.) The voltage across a series capacitor was given as Equation 9, which is repeated here ($V_T = V_s$).

$$V_x = \left(\frac{C_{tot}}{C_x}\right)V_s$$

www.EngineeringBooksPdf.com

A resistive voltage divider is expressed in terms of a resistance ratio, which is a ratio of oppositions. You can think of the capacitive voltage divider by applying this idea from a resistive divider, but using reactance in place of resistance. The equation for the voltage across a capacitor in a capacitive voltage divider can be written as

Equation 21

$$V_x = \left(\frac{X_{Cx}}{X_{C(tot)}}\right)V_s$$

where X_{Cx} is the reactance of capacitor C_x, $X_{C(tot)}$ is the total capacitive reactance, and V_x is the voltage across capacitor C_x. Either Equation 9 or Equation 21 can be used to find the voltage from a divider as illustrated in the following example.

EXAMPLE 18

What is the voltage across C_2 in the circuit of Figure 46?

▶ **FIGURE 46**

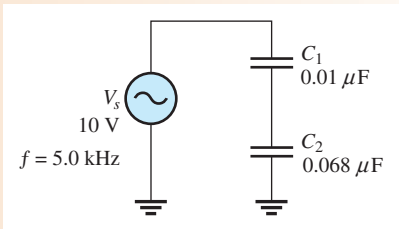

Solution The reactance of the individual capacitors and the total reactance were determined in Example 16. Substituting into Equation 21,

$$V_2 = \left(\frac{X_{C2}}{X_{C(tot)}}\right)V_s = \left(\frac{468\ \Omega}{3.65\ \text{k}\Omega}\right)10\ \text{V} = \mathbf{1.28\ V}$$

Notice that the voltage across the larger capacitor is the smaller fraction of the total. You can obtain the same result from Equation 9:

$$V_2 = \left(\frac{C_{tot}}{C_2}\right)V_s = \left(\frac{0.0087\ \mu\text{F}}{0.068\ \mu\text{F}}\right)10\ \text{V} = \mathbf{1.28\ V}$$

Related Problem Use Equation 21 to determine the voltage across C_1.

Current Leads Capacitor Voltage by 90°

A sinusoidal voltage is shown in Figure 47. Notice that the rate at which the voltage is changing varies along the sine wave curve, as indicated by the "steepness" of the curve. At the zero crossings, the curve is changing at a faster rate than anywhere else along the curve.

▶ **FIGURE 47**

The rates of change of a sine wave.

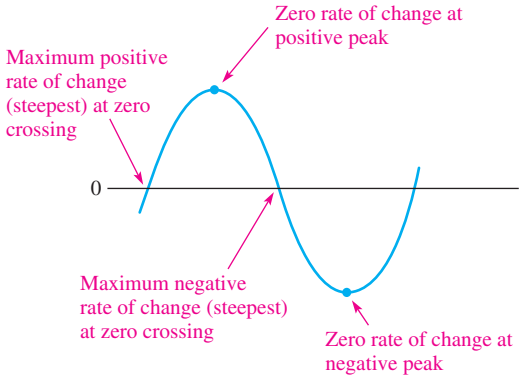

www.EngineeringBooksPdf.com

Filter A type of circuit that passes certain frequencies and rejects all others.

Instantaneous power (p) The value of power in a circuit at any given instant of time.

***RC* time constant** A fixed time interval set by R and C values that determines the time response of a series RC circuit. It equals the product of the resistance and the capacitance.

Reactive power (P_r) The rate at which energy is alternately stored and returned to the source by a capacitor. The unit is the VAR.

Ripple voltage The small fluctuation in voltage due to the charging and discharging of a capacitor.

Temperature coefficient A constant specifying the amount of change in the value of a quantity for a given change in temperature.

Transient time An interval equal to approximately five time constants.

True power (P_{true}) The power that is dissipated in a circuit, usually in the form of heat.

VAR (volt-ampere reactive) The unit of reactive power.

FORMULAS

1	$C = \frac{Q}{V}$	Capacitance in terms of charge and voltage
2	$Q = CV$	Charge in terms of capacitance and voltage
3	$V = \frac{Q}{C}$	Voltage in terms of charge and capacitance
4	$W = \frac{1}{2}CV^2$	Energy stored by a capacitor
5	$\varepsilon_r = \frac{\varepsilon}{\varepsilon_0}$	Dielectric constant (relative permittivity)
6	$C = \frac{A\varepsilon_r(8.85 \times 10^{-12}\ \text{F/m})}{d}$	Capacitance in terms of physical parameters
7	$C_T = \frac{C_1C_2}{C_1 + C_2}$	Total series capacitance (two capacitors)
8	$C_T = \frac{1}{\frac{1}{C_1} + \frac{1}{C_2} + \frac{1}{C_3} + \cdots + \frac{1}{C_n}}$	Total series capacitance (general)
9	$V_x = \left(\frac{C_T}{C_x}\right)V_S$	Voltage across series capacitor
10	$C_T = C_1 + C_2$	Two capacitors in parallel
11	$C_T = C_1 + C_2 + C_3 + \cdots + C_n$	n capacitors in parallel
12	$\tau = RC$	RC time constant
13	$v = V_F + (V_i - V_F)e^{-t/\tau}$	Exponential voltage (general)
14	$i = I_F + (I_i - I_F)e^{-t/\tau}$	Exponential current (general)
15	$v = V_F(1 - e^{-t/RC})$	Increasing exponential voltage beginning at zero
16	$v = V_ie^{-t/RC}$	Decreasing exponential voltage ending at zero
17	$X_C = \frac{1}{2\pi fC}$	Capacitive reactance

www.EngineeringBooksPdf.com

18	$X_{C(tot)} = X_{C1} + X_{C2} + X_{C3} + \cdots + X_{Cn}$	Capacitive reactance for series capacitors
19	$X_{C(tot)} = \dfrac{1}{\dfrac{1}{X_{C1}} + \dfrac{1}{X_{C2}} + \dfrac{1}{X_{C3}} + \cdots + \dfrac{1}{X_{Cn}}}$	Capacitive reactance for parallel capacitors
20	$I = \dfrac{V}{X_C}$	Ohm's law for a capacitor
21§	$V_x = \left(\dfrac{X_{Cx}}{X_{C(tot)}}\right)V_s$	Capacitive voltage divider
22	$P_r = V_{rms} I_{rms}$	Reactive power in a capacitor
23	$P_r = \dfrac{V_{rms}^2}{X_C}$	Reactive power in a capacitor
24	$P_r = I_{rms}^2 X_C$	Reactive power in a capacitor

TRUE/FALSE QUIZ

Answers are at the end of the chapter.

1. The area of the plates of a capacitor is proportional to the capacitance.
2. A capacitance of 1200 pF is the same as 1.2 μF.
3. When two capacitors are in series with a voltage source, the smaller capacitor will have the larger voltage.
4. When two capacitors are in parallel with a voltage source, the smaller capacitor will have the larger voltage.
5. A capacitor appears as an open to a constant dc.
6. When a capacitor is charging or discharging between two levels, the charge on the capacitor changes by 63% of the difference in one time constant.
7. Capacitive reactance is proportional to the applied frequency.
8. The total reactance of series capacitors is the product-over-sum of the individual reactances.
9. Voltage leads current in a capacitor.
10. The unit of reactive power is the VAR.

SELF-TEST

Answers are at the end of the chapter.

1. Which of the following accurately describes a capacitor?
   - **(a)** The plates are conductive.
   - **(b)** The dielectric is an insulator between the plates.
   - **(c)** There is constant direct current (dc) through a fully charged capacitor.
   - **(d)** A capacitor stores charge indefinitely when disconnected from the source.
   - **(e)** none of the above answers
   - **(f)** all the above answers
   - **(g)** only answers (a) and (b)
2. Which one of the following statements is true?
   - **(a)** There is current through the dielectric of a charging capacitor.
   - **(b)** When a capacitor is connected to a dc voltage source, it will charge to the value of the source.
   - **(c)** A capacitor can be discharged by disconnecting it from the voltage source.
3. A capacitance of 0.01 μF is larger than
   (a) 0.00001 F **(b)** 100,000 pF **(c)** 1000 pF **(d)** all of these answers

www.EngineeringBooksPdf.com

At the peaks, the curve has a zero rate of change because it has just reached its maximum and is at the point of changing direction.

The amount of charge stored by a capacitor determines the voltage across it. Therefore, the rate at which the charge is moved ($Q/t = I$) from one plate to the other determines the rate at which the voltage changes. When the current is changing at its maximum rate (at the zero crossings), the voltage is at its maximum value (peak). When the current is changing at its minimum rate (zero at the peaks), the voltage is at its minimum value (zero). This phase relationship is illustrated in Figure 48. As you can see, the current peaks occur a quarter of a cycle before the voltage peaks. Thus, the current leads the voltage by 90°.

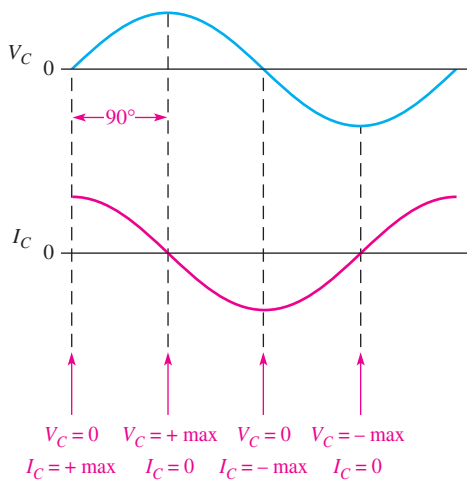

FIGURE 48

Current is always leading the capacitor voltage by 90°.

Power in a Capacitor

As discussed earlier in this chapter, a charged capacitor stores energy in the electric field within the dielectric. An ideal capacitor does not dissipate energy; it only stores energy temporarily. When an ac voltage is applied to a capacitor, energy is stored by the capacitor during one-quarter of the voltage cycle. Then the stored energy is returned to the source during another quarter of the cycle. There is no net energy loss. Figure 49 shows the power curve that results from one cycle of capacitor voltage and current.

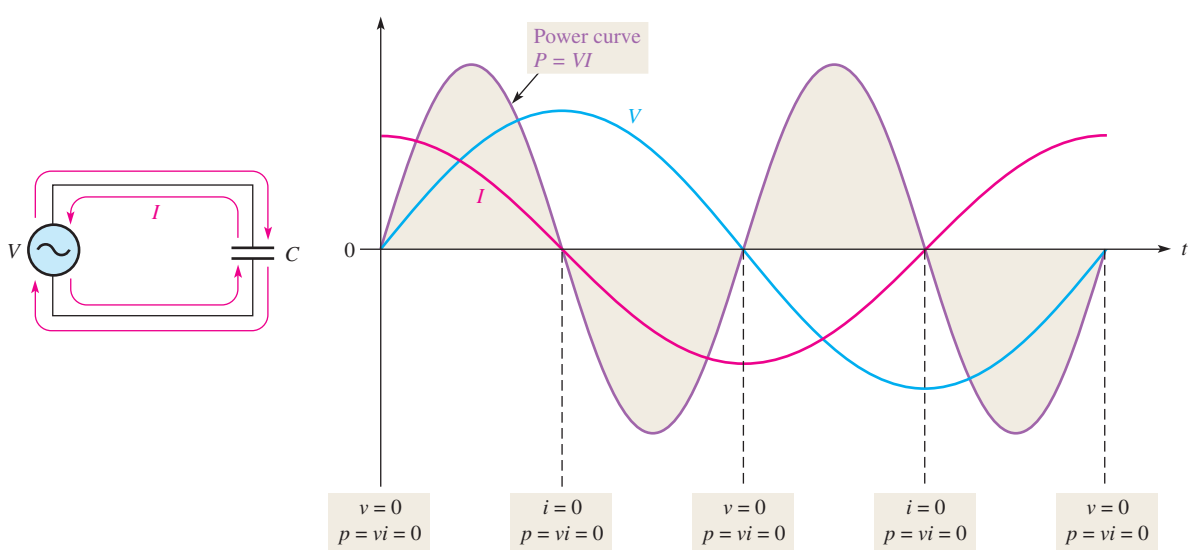

FIGURE 49

Power curve for a capacitor.

www.EngineeringBooksPdf.com

Instantaneous Power (p) The product of instantaneous voltage, v, and instantaneous current, i, gives **instantaneous power**, p. At points where v or i is zero, p is also zero. When both v and i are positive, p is also positive. When either v or i is positive and the other negative, p is negative. When both v and i are negative, p is positive. As you can see, the power follows a sinusoidal-shaped curve. Positive values of power indicate that energy is stored by the capacitor. Negative values of power indicate that energy is returned from the capacitor to the source. Note that the power fluctuates at a frequency twice that of the voltage or current, as energy is alternately stored and returned to the source.

True Power (P_{true}) Ideally, all of the energy stored by a capacitor during the positive portion of the power cycle is returned to the source during the negative portion. No net energy is lost due to conversion to heat in the capacitor, so the **true power** is zero. Actually, because of leakage and foil resistance in a practical capacitor, a small percentage of the total power is dissipated in the form of true power.

Reactive Power (P_r) The rate at which a capacitor stores or returns energy is called its **reactive power**, P_r. The reactive power is a nonzero quantity, because at any instant in time, the capacitor is actually taking energy from the source or returning energy to it. Reactive power does not represent an energy loss. The following formulas apply:

Equation 22
$$P_r = V_{rms} I_{rms}$$

Equation 23
$$P_r = \frac{V_{rms}^2}{X_C}$$

Equation 24
$$P_r = I_{rms}^2 X_C$$

Notice that these equations are of the same form as those for true power in a resistor. The voltage and current are expressed as rms values. The unit of reactive power is **VAR (volt-ampere reactive)**.

EXAMPLE 19

Determine the true power and the reactive power in Figure 50.

▶ FIGURE 50

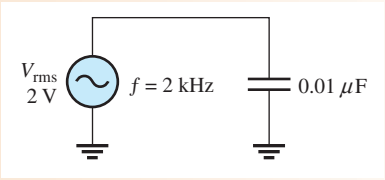

Solution The true power P_{true} is always **zero** for an ideal capacitor. Determine the reactive power by first finding the value for the capacitive reactance and then using Equation 23.

$$X_C = \frac{1}{2\pi fC} = \frac{1}{2\pi(2 \times 10^3\,\text{Hz})(0.01 \times 10^{-6}\,\text{F})} = 7.96\,\text{k}\Omega$$

$$P_r = \frac{V_{rms}^2}{X_C} = \frac{(2\,\text{V})^2}{7.96\,\text{k}\Omega} = 503 \times 10^{-6}\,\text{VAR} = \mathbf{503\ \mu VAR}$$

Related Problem If the frequency is doubled in Figure 50, what are the true power and the reactive power?

www.EngineeringBooksPdf.com

4. A capacitance of 1000 pF is smaller than
   (a) 0.01 μF **(b)** 0.001 μF **(c)** 0.00000001 F **(d)** answers (a) and (c)
5. When the voltage across a capacitor is increased, the stored charge
   (a) increases **(b)** decreases **(c)** remains constant **(d)** fluctuates
6. When the voltage across a capacitor is doubled, the stored charge
   (a) stays the same **(b)** is halved **(c)** increases by four **(d)** doubles
7. The voltage rating of a capacitor is increased by
   (a) increasing the plate separation **(b)** decreasing the plate separation
   (c) increasing the plate area **(d)** answers (b) and (c)
8. The capacitance value is increased by
   (a) decreasing plate area **(b)** increasing plate separation
   (c) decreasing plate separation **(d)** increasing plate area
   (e) answers (a) and (b) **(f)** answers (c) and (d)
9. A 1 μF, a 2.2 μF, and a 0.047 μF capacitor are connected in series. The total capacitance is less than
   (a) 1 μF **(b)** 2.2 μF **(c)** 0.047 μF **(d)** 0.001 μF
10. Four 0.022 μF capacitors are in parallel. The total capacitance is
    (a) 0.022 μF **(b)** 0.088 μF **(c)** 0.011 μF **(d)** 0.044 μF
11. An uncharged capacitor and a resistor are connected in series with a switch and a 12 V battery. At the instant the switch is closed, the voltage across the capacitor is
    (a) 12 V **(b)** 6 V **(c)** 24 V **(d)** 0 V
12. In Question 11, the voltage across the capacitor when it is fully charged is
    (a) 12 V **(b)** 6 V **(c)** 24 V **(d)** −6 V
13. In Question 11, the capacitor will reach full charge in a time equal to approximately
    (a) RC **(b)** $5RC$ **(c)** $12RC$ **(d)** cannot be predicted
14. A sinusoidal voltage is applied across a capacitor. When the frequency of the voltage is increased, the current
    (a) increases **(b)** decreases **(c)** remains constant **(d)** ceases
15. A capacitor and a resistor are connected in series to a sine wave generator. The frequency is set so that the capacitive reactance is equal to the resistance and, thus, an equal amount of voltage appears across each component. If the frequency is decreased,
    (a) $V_R > V_C$ **(b)** $V_C > V_R$ **(c)** $V_R = V_C$ **(d)** $V_C < V_R$

TROUBLESHOOTING: SYMPTOM AND CAUSE

The purpose of these exercises is to help develop thought processes essential to troubleshooting. Answers are at the end of the chapter.

Determine the cause for each set of symptoms. Refer to Figure 61.

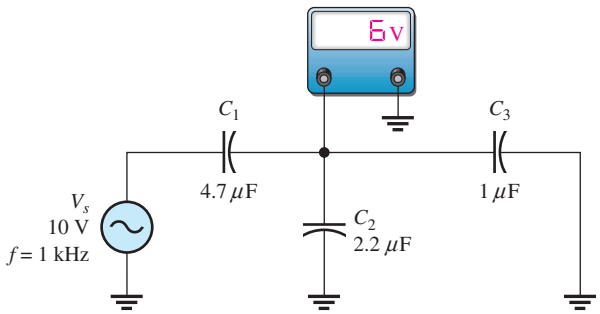

▲ **FIGURE 61**

The ac meter indicates the correct reading for this circuit.

www.EngineeringBooksPdf.com

SECTION 6 CHECKUP

1. Calculate X_C for $f = 5$ kHz and $C = 47$ pF.
2. At what frequency is the reactance of a 0.1 μF capacitor equal to 2 kΩ?
3. Calculate the rms current in Figure 51.
4. State the phase relationship between current and voltage in a capacitor.
5. A 1 μF capacitor is connected to an ac voltage source of 12 V rms. What is the true power?
6. In Question 5, determine the reactive power at a frequency of 500 Hz.

▶ FIGURE 51

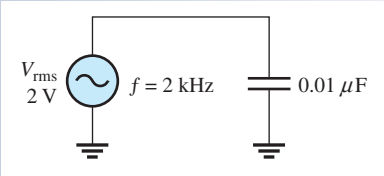

7 CAPACITOR APPLICATIONS

Capacitors are widely used in electrical and electronic applications.

After completing this section, you should be able to

- **Discuss some capacitor applications**
  - Describe a power supply filter
  - Explain the purpose of coupling and bypass capacitors
  - Discuss the basics of capacitors applied to tuned circuits, timing circuits, and computer memories

If you pick up any circuit board, open any power supply, or look inside any piece of electronic equipment, chances are you will find capacitors of one type or another. These components are used for a variety of purposes in both dc and ac applications.

Electrical Storage

One of the most basic applications of a capacitor is as a backup voltage source for low-power circuits such as certain types of semiconductor memories in computers. This particular application requires a very high capacitance value and negligible leakage.

A storage capacitor is connected between the dc power supply input to the circuit and ground. When the circuit is operating from its normal power supply, the capacitor remains fully charged to the dc power supply voltage. If the normal power source is disrupted, effectively removing the power supply from the circuit, the storage capacitor temporarily becomes the power source for the circuit.

A capacitor provides voltage and current to a circuit as long as its charge remains sufficient. As current is drawn by the circuit, charge is removed from the capacitor and the voltage decreases. For this reason, a storage capacitor can only be used as a temporary power source. The length of time that a capacitor can provide sufficient power to a circuit depends on the capacitance and the amount of current drawn by the circuit. The smaller the current and the higher the capacitance, the longer the time a capacitor can provide power to a circuit.

www.EngineeringBooksPdf.com

1. *Symptom:* The voltmeter reading is 0 V.
   Cause:
   (a) C_1 is shorted. **(b)** C_2 is shorted. **(c)** C_3 is open.
2. *Symptom:* The voltmeter reading is 10 V.
   Cause:
   (a) C_1 is shorted. **(b)** C_2 is open. **(c)** C_3 is open.
3. *Symptom:* The voltmeter reading is 6.86 V.
   Cause:
   (a) C_1 is open. **(b)** C_2 is open. **(c)** C_3 is open.
4. *Symptom:* The voltmeter reading is 0 V.
   Cause:
   (a) C_1 is open. **(b)** C_2 is open. **(c)** C_3 is open.
5. *Symptom:* The voltmeter reading is 8.28 V.
   Cause:
   (a) C_1 is shorted. **(b)** C_2 is open. **(c)** C_3 is open.

PROBLEMS

Answers to odd-numbered problems are at the end of the chapter.

BASIC PROBLEMS

SECTION 1 The Basic Capacitor

1. **(a)** Find the capacitance when $Q = 50\ \mu C$ and $V = 10$ V.
   (b) Find the charge when $C = 0.001\ \mu F$ and $V = 1$ kV.
   (c) Find the voltage when $Q = 2$ mC and $C = 200\ \mu F$.
2. Convert the following values from microfarads to picofarads:
   (a) $0.1\ \mu F$ **(b)** $0.0025\ \mu F$ **(c)** $5\ \mu F$
3. Convert the following values from picofarads to microfarads:
   (a) 1000 pF **(b)** 3500 pF **(c)** 250 pF
4. Convert the following values from farads to microfarads:
   (a) 0.0000001 F **(b)** 0.0022 F **(c)** 0.0000000015 F
5. What size capacitor is capable of storing 10 mJ of energy with 100 V across its plates?
6. A mica capacitor has a plate area of 20 cm^2 and a dielectric thickness of 2.5 mils. What is its capacitance?
7. An air capacitor has plates with an area of 0.1 m^2. The plates are separated by 0.01 m. Calculate the capacitance.
8. A student wants to construct a 1 F capacitor out of two square plates for a science fair project. He plans to use a paper dielectric ($\varepsilon_r = 2.5$) that is 8×10^{-5} m thick. The science fair is to be held in the Astrodome. Will his capacitor fit in the Astrodome? What would be the size of the plates if it could be constructed?
9. A student decides to construct a capacitor using two conducting plates 30 cm on a side. He separates the plates with a paper dielectric ($\varepsilon_r = 2.5$) that is 8×10^{-5} m thick. What is the capacitance of his capacitor?
10. At ambient temperature (25°C), a certain capacitor is specified to be 1000 pF. It has a negative temperature coefficient of 200 ppm/°C. What is its capacitance at 75°C?
11. A 0.001 μF capacitor has a positive temperature coefficient of 500 ppm/°C. How much change in capacitance will a 25°C increase in temperature cause?

SECTION 2 Types of Capacitors

12. In the construction of a stacked-foil mica capacitor, how is the plate area increased?
13. What type of capacitor has the higher dielectric constant, mica or ceramic?

www.EngineeringBooksPdf.com

Power Supply Filtering

A basic dc power supply consists of a circuit known as a **rectifier** followed by a filter. The rectifier converts the 120 V, 60 Hz sinusoidal voltage available at a standard outlet to a pulsating dc voltage that can be either a half-wave rectified voltage or a full-wave rectified voltage, depending on the type of rectifier circuit. As shown in Figure 52(a), a half-wave rectifier removes each negative half-cycle of the sinusoidal voltage. As shown in Figure 52(b), a full-wave rectifier actually reverses the polarity of the negative portion of each cycle. Both half-wave and full-wave rectified voltages are dc because, even though they are changing, they do not alternate polarity.

▶ FIGURE 52

Half-wave and full-wave rectifier operation.

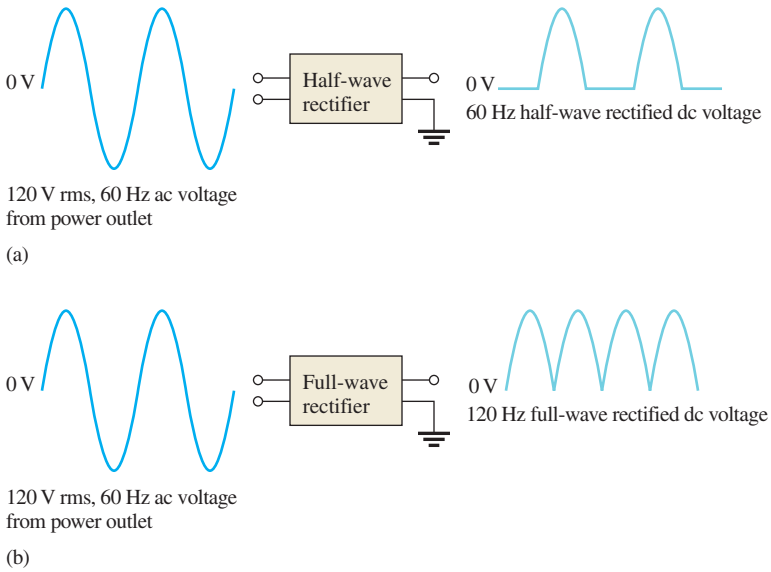

To be useful for powering electronic circuits, the rectified voltage must be changed to constant dc voltage because all circuits require constant power. When connected to the rectifier output, the **filter** nearly eliminates the fluctuations in the rectified voltage and provides a smooth constant-value dc voltage to the load, which is the electronic circuit, as indicated in Figure 53.

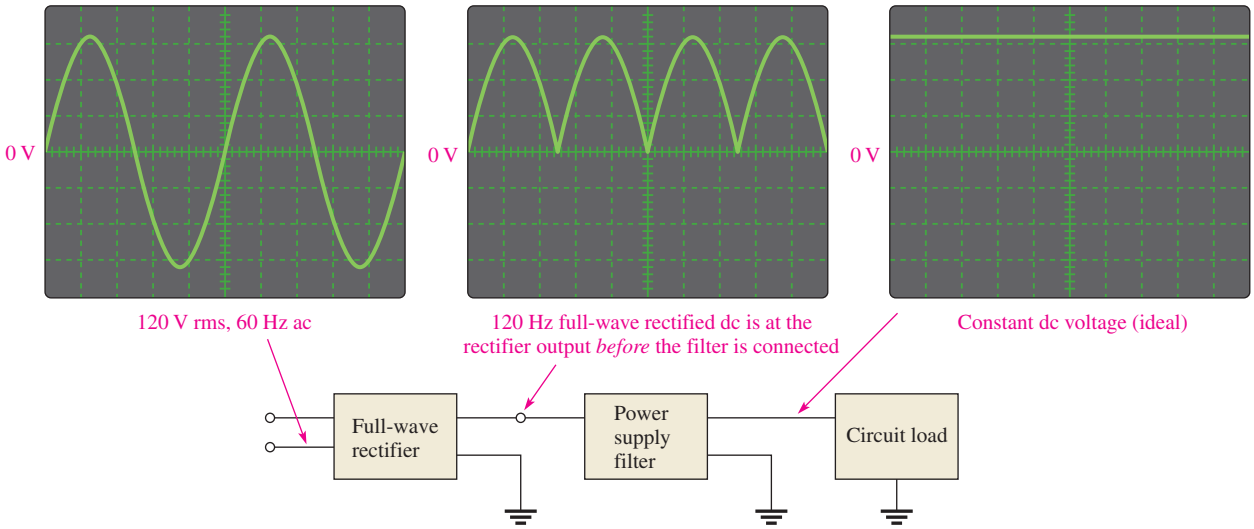

▲ FIGURE 53

Basic block diagram and operation of a dc power supply.

www.EngineeringBooksPdf.com

14. Show how to connect an electrolytic capacitor across points *A* and *B* in Figure 62.

▶ FIGURE 62

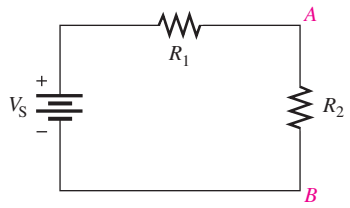

15. Determine the value of the typographically labeled ceramic disk capacitors in Figure 63.

▶ FIGURE 63

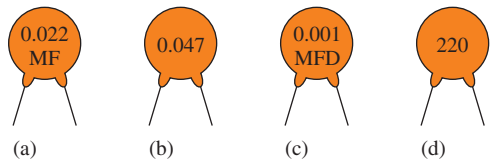

16. Name two types of electrolytic capacitors. How do electrolytics differ from other capacitors?

17. Identify the parts of the ceramic disk capacitor shown in the cutaway view of Figure 64 by referring to Figure 8(b).

▶ FIGURE 64

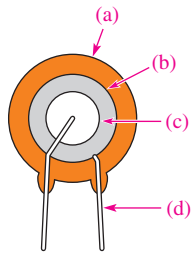

SECTION 3 Series Capacitors

18. Five 1000 pF capacitors are in series. What is the total capacitance?

19. Find the total capacitance for each circuit in Figure 65.

▶ FIGURE 65

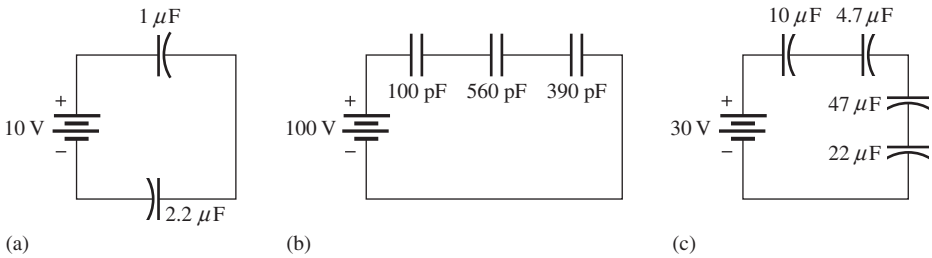

20. For each circuit in Figure 65, determine the voltage across each capacitor.

21. The total charge stored by the series capacitors in Figure 66 is 10 μC. Determine the voltage across each of the capacitors.

▶ FIGURE 66

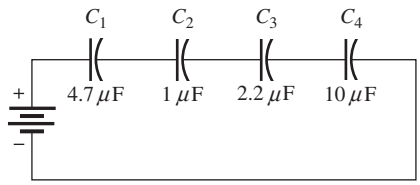

www.EngineeringBooksPdf.com

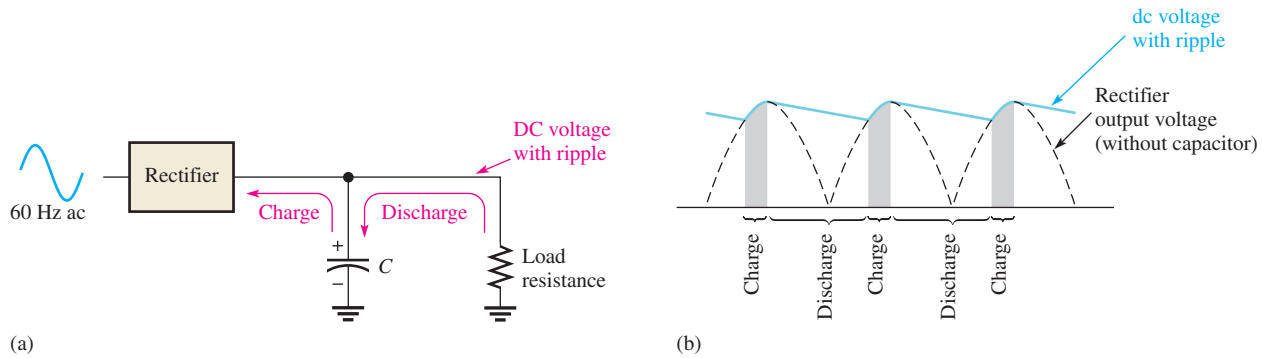

▲ FIGURE 54

Basic operation of a power supply filter capacitor.

The Capacitor as a Power Supply Filter Capacitors are used as filters in dc power supplies because of their ability to store electrical charge. Figure 54(a) shows a dc power supply with a full-wave rectifier and a capacitor filter. The operation can be described from a charging and discharging point of view as follows. Assume the capacitor is initially uncharged. When the power supply is first turned on and the first cycle of the rectified voltage occurs, the capacitor will quickly charge through the low resistance of the rectifier. The capacitor voltage will follow the rectified voltage curve up to the peak of the rectified voltage. As the rectified voltage passes the peak and begins to decrease, the capacitor will begin to discharge very slowly through the high resistance of the load circuit, as indicated in Figure 54(b). The amount of discharge is typically very small and is exaggerated in the figure for purposes of illustration. The next cycle of the rectified voltage will recharge the capacitor back to the peak value by replenishing the small amount of charge lost since the previous peak. This pattern of a small amount of charging and discharging continues as long as the power is on.

A rectifier is designed so that it allows current only in the direction to charge the capacitor. The capacitor will not discharge back through the rectifier but will only discharge a small amount through the relatively high resistance of the load. The small fluctuation in voltage due to the charging and discharging of the capacitor is called the **ripple voltage**. A good dc power supply has a very small amount of ripple on its dc output. The discharge time constant of a power supply filter capacitor depends on its capacitance and the resistance of the load; consequently, the higher the capacitance value, the longer the discharge time and, therefore, the smaller the ripple voltage.

DC Blocking and AC Coupling

Capacitors are commonly used to block the constant dc voltage in one part of a circuit from getting to another part. As an example of this, a capacitor is connected between two stages of an amplifier to prevent the dc voltage at the output of stage 1 from affecting the dc voltage at the input of stage 2, as illustrated in Figure 55. Assume that, for proper operation, the output of stage 1 has a zero dc voltage and the input to stage 2 has a 3 V dc voltage. The capacitor prevents the 3 V dc at stage 2 from getting to the stage 1 output and affecting its zero value, and vice versa.

If a sinusoidal signal voltage is applied to the input to stage 1, the signal voltage is increased (amplified) and appears on the output of stage 1, as shown in Figure 55. The amplified signal voltage is then coupled through the capacitor to the input of stage 2 where it is superimposed on the 3 V dc level and then again amplified by stage 2. In order for the signal voltage to be passed through the capacitor without being reduced, the capacitor must be large enough so that its reactance at the frequency of the signal voltage is negligible. In this type of application, the capacitor is known as a **coupling** capacitor, which ideally appears as an open to dc and as a short to ac. As the signal frequency is reduced, the

www.EngineeringBooksPdf.com

SECTION 4 Parallel Capacitors

22. Determine C_T for each circuit in Figure 67.

▶ FIGURE 67

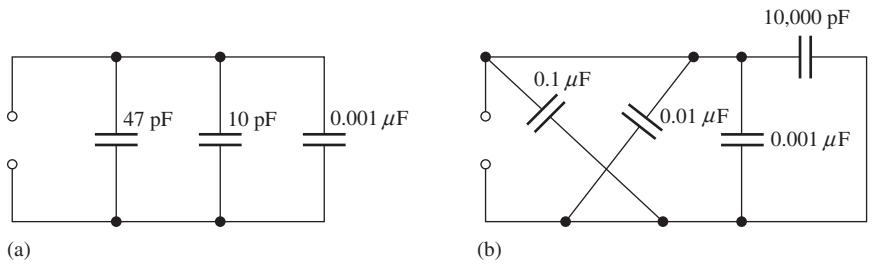

23. Determine the total capacitance and total charge on the capacitors in Figure 68.

24. Assume you need a total capacitance of 2.1 μF in a certain timing application, but all that is available are 0.22 μF and 0.47 μF capacitors (in large quantities). How would you get the total capacitance that you need?

▶ FIGURE 68

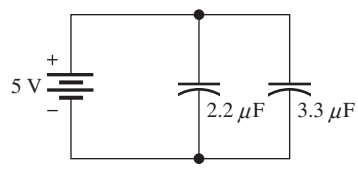

SECTION 5 Capacitors in DC Circuits

25. Determine the time constant for each of the following series *RC* combinations:

(a) $R = 100\ \Omega, C = 1\ \mu F$ **(b)** $R = 10\ M\Omega, C = 56\ pF$

(c) $R = 4.7\ k\Omega, C = 0.0047\ \mu F$ **(d)** $R = 1.5\ M\Omega, C = 0.01\ \mu F$

26. Determine how long it takes the capacitor to reach full charge for each of the following combinations:

(a) $R = 47\ \Omega, C = 47\ \mu F$ **(b)** $R = 3300\ \Omega, C = 0.015\ \mu F$

(c) $R = 22\ k\Omega, C = 100\ pF$ **(d)** $R = 4.7\ M\Omega, C = 10\ pF$

27. In the circuit of Figure 69, the capacitor initially is uncharged. Determine the capacitor voltage at the following times after the switch is closed:

(a) 10 μs **(b)** 20 μs **(c)** 30 μs **(d)** 40 μs **(e)** 50 μs

▶ FIGURE 69

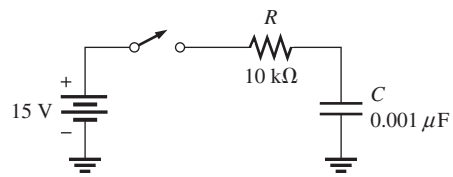

28. In Figure 70, the capacitor is charged to 25 V. Find the capacitor voltage at the following times when the switch is closed:

(a) 1.5 ms **(b)** 4.5 ms **(c)** 6 ms **(d)** 7.5 ms

▶ FIGURE 70

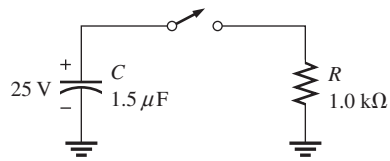

www.EngineeringBooksPdf.com

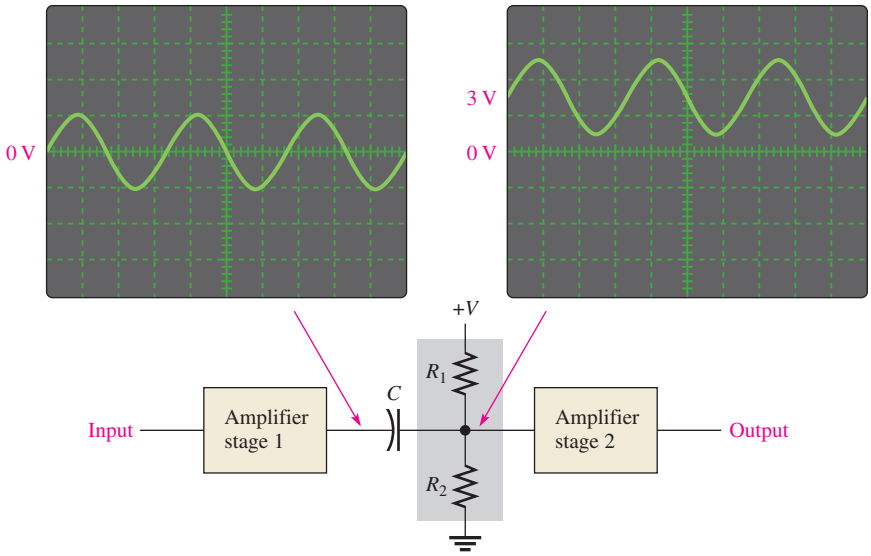

▶ **FIGURE 55**

An application of a capacitor used to block dc and couple ac in an amplifier.

capacitive reactance increases and, at some point, the capacitive reactance becomes large enough to cause a significant reduction in ac voltage between stage 1 and stage 2.

Power Line Decoupling

Capacitors connected from the dc supply voltage line to ground are used on circuit boards to decouple unwanted voltage transients or spikes that occur on the dc supply voltage because of fast switching digital circuits. A voltage **transient** contains higher frequencies that may affect the operation of the circuits. These transients are shorted to ground through the very low reactance of the decoupling capacitors. **Decoupling** capacitors are often used at various points along the supply voltage line on a circuit board, particularly near integrated circuits (ICs).

Bypassing

Bypass capacitors are used to bypass an ac voltage around a resistor in a circuit without affecting the dc voltage across the resistor. In amplifier circuits, for example, dc voltages called *bias voltages* are required at various points. For the amplifier to operate properly, certain bias voltages must remain constant and, therefore, any ac voltages must be removed. A sufficiently large capacitor connected from a bias point to ground provides a low reactance path to ground for ac voltages, leaving the constant dc bias voltage at the given point. This bypass application is illustrated in Figure 56. As frequencies decrease, the bypass capacitor becomes less effective because of its increased reactance.

Signal Filters

Filters are used for selecting one ac signal with a certain specified frequency from a wide range of signals with many different frequencies or for selecting a certain band of frequencies and eliminating all others. A common example of this application is in radio and television receivers where it is necessary to select the signal transmitted from a given station and eliminate or filter out the signals transmitted from all the other stations in the area.

When you tune your radio or TV, you are actually changing the capacitance in the tuner circuit (which is a type of filter) so that only the signal from the station or channel you want passes through to the receiver circuitry. Capacitors are used in conjunction with resistors, inductors, and other components in these types of filters.

www.EngineeringBooksPdf.com

29. Repeat Problem 27 for the following time intervals:

(a) 2 μs **(b)** 5 μs **(c)** 15 μs

30. Repeat Problem 28 for the following time intervals:

(a) 0.5 ms **(b)** 1 ms **(c)** 2 ms

SECTION 6 Capacitors in AC Circuits

31. Determine X_C for a 0.047 μF capacitor at each of the following frequencies:

(a) 10 Hz **(b)** 250 Hz **(c)** 5 kHz **(d)** 100 kHz

32. What is the value of the total capacitive reactance in each circuit in Figure 71?

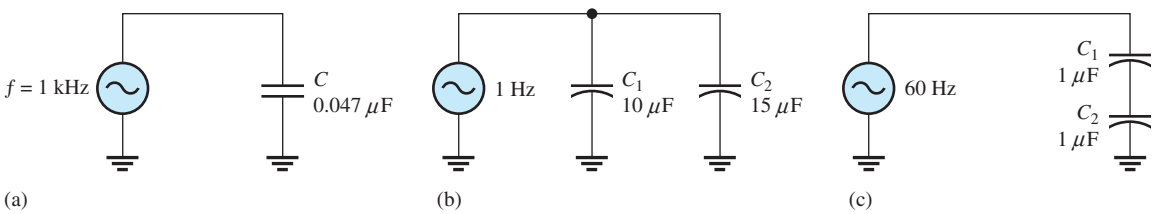

▲ FIGURE 71

33. For the circuit in Figure 72, find the reactance of each capacitor, the total reactance, and the voltage across each capacitor.

▶ FIGURE 72

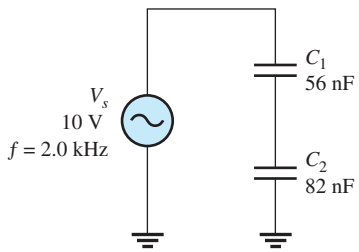

34. In each circuit of Figure 71, what frequency is required to produce an $X_{C(tot)}$ of 100 Ω? An $X_{C(tot)}$ of 1 kΩ?

35. A sinusoidal voltage of 20 V rms produces an rms current of 100 mA when connected to a certain capacitor. What is the reactance?

36. A 10 kHz voltage is applied to a 0.0047 μF capacitor, and 1 mA of rms current is measured. What is the rms value of the voltage?

37. Determine the true power and the reactive power in Problem 36.

SECTION 7 Capacitor Applications

38. If another capacitor is connected in parallel with the existing capacitor in the power supply filter of Figure 54, how is the ripple voltage affected?

39. Ideally, what should the reactance of a bypass capacitor be in order to eliminate a 10 kHz ac voltage at a given point in an amplifier circuit?

ADVANCED PROBLEMS

40. Two series capacitors (one 1 μF, the other of unknown value) are charged from a 12 V source. The 1 μF capacitor is charged to 8 V, and the other to 4 V. What is the value of the unknown capacitor?

41. How long does it take C to discharge to 3 V in Figure 70?

42. How long does it take C to charge to 8 V in Figure 69?

43. Determine the time constant for the circuit in Figure 73.

www.EngineeringBooksPdf.com

▶ FIGURE 73

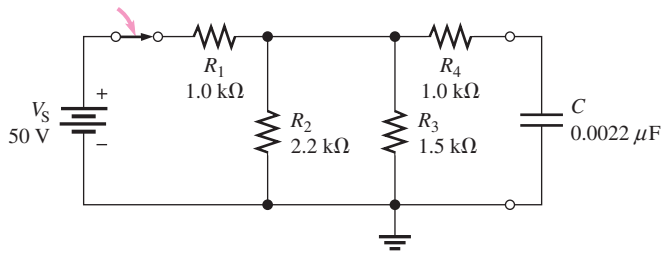

44. In Figure 74, the capacitor initially is uncharged. At $t = 10\ \mu s$ after the switch is closed, the instantaneous capacitor voltage is 7.2 V. Determine the value of R.

45. **(a)** The capacitor in Figure 75 is uncharged when the switch is thrown into position 1. The switch remains in position 1 for 10 ms and then is thrown into position 2, where it remains indefinitely. Draw the complete waveform for the capacitor voltage.

(b) If the switch is thrown back to position 1 after 5 ms in position 2, and then is left in position 1, how will the waveform appear?

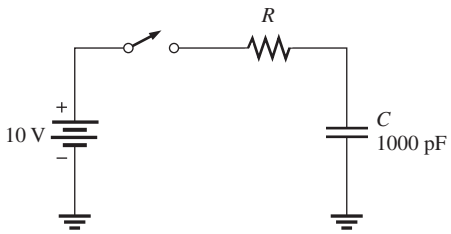

▲ FIGURE 74

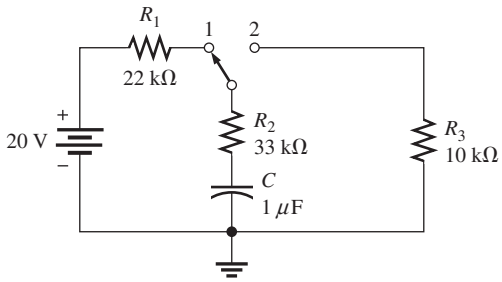

▲ FIGURE 75

46. Determine the ac voltage across each capacitor and the current in each branch of the circuit in Figure 76.

▶ FIGURE 76

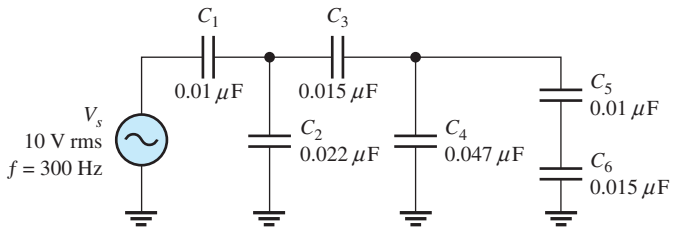

47. Find the value of C_1 in Figure 77.

▶ FIGURE 77

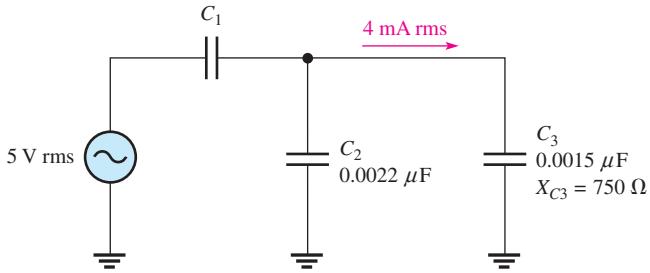

www.EngineeringBooksPdf.com

48. How much does the voltage across C_5 and C_6 change when the ganged switch is thrown from position 1 to position 2 in Figure 78?

▶ FIGURE 78

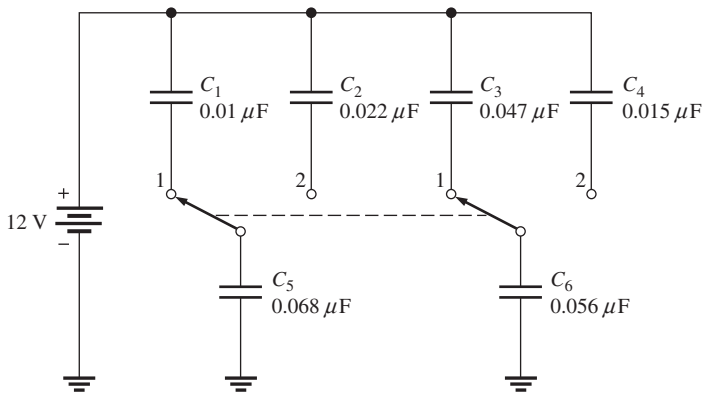

49. If C_4 in Figure 76 is open, determine the voltages that would be measured across the other capacitors.

MULTISIM TROUBLESHOOTING PROBLEMS

50. Open file P09-50; files are found at www.pearsonhighered.com/floyd/. Determine if there is a fault. If so, identify it.

51. Open file P09-51 and determine if there is a fault. If so, identify it.

52. Open file P09-52 and determine if there is a fault. If so, identify it.

53. Open file P09-53 and determine if there is a fault. If so, identify it.

54. Open file P09-54 and determine if there is a fault. If so, identify it.

ANSWERS

SECTION CHECKUPS

SECTION 1 The Basic Capacitor

1. Capacitance is the ability (capacity) to store electrical charge.
2. **(a)** There are 1,000,000 microfarads in one farad.
   (b) There are 1×10^{12} picofarads in one farad.
   (c) There are 1,000,000 picofarads in one microfarad.
3. $0.0015\ \mu F \times 10^6\ pF/\mu F = 1500\ pF$; $0.0015\ \mu F \times 10^{-6}\ F/\mu F = 0.0000000015\ F$
4. $W = \frac{1}{2}CV^2 = \frac{1}{2}(0.01\ \mu F)(15\ V)^2 = 1.125\ \mu J$
5. **(a)** Capacitance increases when plate area is increased.
   (b) Capacitance decreases when plate separation is increased.
6. (1000 V/mil)(2 mils) = 2 kV

SECTION 2 Types of Capacitors

1. Capacitors are commonly classified by the dielectric material.
2. A fixed capacitance cannot be changed; a variable capacitor can.
3. Electrolytic capacitors are polarized.
4. Be sure that the voltage rating is sufficient and connect the positive end to the positive side of the circuit when installing a polarized capacitor.
5. The positive lead should be connected to ground.

www.EngineeringBooksPdf.com

SECTION 3 Series Capacitors

1. C_T of series capacitors is less than the smallest value.
2. $C_T = 61.2$ pF
3. $C_T = 0.006\ \mu$F
4. $V = (0.006\ \mu\text{F}/0.01\ \mu\text{F})10\text{ V} = 6\text{ V}$

SECTION 4 Parallel Capacitors

1. The individual parallel capacitors are added to get C_T.
2. Use five 0.01 μF capacitors in parallel to get 0.05 μF.
3. $C_T = 167$ pF

SECTION 5 Capacitors in DC Circuits

1. $\tau = RC = 1.2\ \mu$s
2. $5\tau = 6\ \mu$s; V_C is approximately 5 V.
3. $v_{2\text{ms}} = (0.86)10\text{ V} = 8.6\text{ V}$; $v_{3\text{ms}} = (0.95)10\text{ V} = 9.5\text{ V}$; $v_{4\text{ms}} = (0.98)10\text{ V} = 9.8\text{ V}$; $v_{5\text{ms}} = (0.99)10\text{ V} = 9.9\text{ V}$
4. $v_C = (0.37)(100\text{ V}) = 37\text{ V}$

SECTION 6 Capacitors in AC Circuits

1. $X_C = 1/2\pi fC = 677\text{ k}\Omega$
2. $f = 1/2\pi CX_C = 796$ Hz
3. $I_{\text{rms}} = 1\text{ V}/1.59\ \Omega = 629$ mA
4. Current leads voltage by 90°.
5. $P_{\text{true}} = 0$ W
6. $P_r = (12\text{ V})^2/318\ \Omega = 0.453$ VAR

SECTION 7 Capacitor Applications

1. Once the capacitor charges to the peak voltage, it discharges very little before the next peak thus smoothing the rectified voltage.
2. A coupling capacitor allows ac to pass from one point to another, but blocks constant dc.
3. A coupling capacitor must be large enough to have a negligible reactance at the frequency that is to be passed without opposition.
4. A decoupling capacitor shorts power line voltage transients to ground.
5. X_C is inversely proportional to frequency and so is the filter's ability to pass ac signals.

RELATED PROBLEMS FOR EXAMPLES

1 10 kV
2 0.047 μF
3 100,000,000 pF
4 62.7 pF
5 278 pF
6 1.54 μF
7 2.83 V
8 650 pF
9 0.163 μF
10 891 μs
11 8.36 V
12 8.13 V

www.EngineeringBooksPdf.com

13 0.7 ms; 95 V
14 0.42 V
15 3.39 kHz
16 **(a)** 1.83 kΩ
(b) 408 Ω
17 4.40 mA
18 8.72 V
19 0 W; 1.01 mVAR

TRUE/FALSE QUIZ

1. T **2.** F **3.** T **4.** F **5.** T **6.** T **7.** F **8.** F **9.** F **10.** T

SELF-TEST

1. (g) **2.** (b) **3.** (c) **4.** (d) **5.** (a) **6.** (d) **7.** (a) **8.** (f)
9. (c) **10.** (b) **11.** (d) **12.** (a) **13.** (b) **14.** (a) **15.** (b)

TROUBLESHOOTING: SYMPTOM AND CAUSE

1. (b)
2. (a)
3. (c)
4. (a)
5. (b)

PROBLEMS – ODD-NUMBERED ANSWERS

1. **(a)** 5 μF **(b)** 1 μC **(c)** 10 V
3. **(a)** 0.001 μF **(b)** 0.0035 μF **(c)** 0.00025 μF
5. 2 μF
7. 88.5 pF
9. 0.0249 μF
11. A 12.5 pF increase
13. Ceramic
15. **(a)** 0.022 μF **(b)** 0.047 μF **(c)** 0.001 μF **(d)** 22 pF
17. **(a)** Encapsulation **(b)** Dielectric (ceramic disk) **(c)** Plate (metal disk) **(d)** Leads
19. **(a)** 0.69 μF **(b)** 69.7 pF **(c)** 2.6 μF
21. $V_1 = 2.13$ V; $V_2 = 10$ V; $V_3 = 4.55$ V; $V_4 = 1$ V
23. 5.5 μF
25. **(a)** 100 μs **(b)** 560 μs **(c)** 22.1 μs **(d)** 15 ms
27. **(a)** 9.48 V **(b)** 13.0 V **(c)** 14.3 V **(d)** 14.7 V **(e)** 14.9 V
29. **(a)** 2.72 V **(b)** 5.90 V **(c)** 11.7 V
31. **(a)** 339 kΩ **(b)** 13.5 kΩ **(c)** 677 Ω **(d)** 33.9 Ω
33. $X_{C1} = 1.42$ kΩ; $X_{C2} = 970$ Ω; $X_{CT} = 2.39$ kΩ $V_1 = 5.94$ V; $V_2 = 4.06$ V
35. 200 Ω
37. $P_{true} = 0$ W; $P_r = 3.39$ mVAR
39. 0 Ω

www.EngineeringBooksPdf.com

41. 3.18 ms

43. 3.24 μs

45. **(a)** Charges to 3.32 V in 10 ms, then discharges to 0 V in 215 ms.

(b) Charges to 3.32 V in 10 ms, then discharges to 2.96 V in 5 ms, then charges toward 20 V.

47. 0.0056 μF

49. $V_1 = 7.25$ V; $V_2 = 2.76$ V; $V_3 = 0.79$ V;
$V_5 = 1.19$ V; $V_6 = 0.79$ V; $V_4 = 1.98$ V

51. C_2 is open.

53. No fault

PHOTO CREDITS FOR REOCCURRING IMAGES

CD Icon: Stockbyte/Getty Images; **Computer Chips:** Photodisc/Thinkstock; **Computer:** Jeff Maloney/Photodisc/Getty Images; **Fiber Optic:** discpicture/Shutterstock.

www.EngineeringBooksPdf.com

This page intentionally left blank

www.EngineeringBooksPdf.com

RC Circuits

CHAPTER OUTLINE

1 Sinusoidal Response of Series *RC* Circuits
2 Impedance and Phase Angle of Series *RC* Circuits
3 Analysis of Series *RC* Circuits
4 Impedance and Phase Angle of Parallel *RC* Circuits
5 Analysis of Parallel *RC* Circuits
6 Analysis of Series-Parallel *RC* Circuits
7 Power in *RC* Circuits
8 Basic Applications
9 Troubleshooting
Application Assignment: Putting Your Knowledge to Work

CHAPTER OBJECTIVES

- Describe the relationship between current and voltage in a series *RC* circuit
- Determine impedance and phase angle in a series *RC* circuit
- Analyze a series *RC* circuit
- Determine impedance and phase angle in a parallel *RC* circuit
- Analyze a parallel *RC* circuit
- Analyze series-parallel *RC* circuits
- Determine power in *RC* circuits
- Discuss some basic *RC* applications
- Troubleshoot *RC* circuits

KEY TERMS

- Impedance (Z)
- Phase angle
- *RC* lag circuit
- *RC* lead circuit
- Capacitive susceptance (B_C)
- Admittance (Y)
- Apparent power (P_a)
- Power factor
- Frequency response
- Cutoff frequency
- Bandwidth

APPLICATION ASSIGNMENT PREVIEW

Your assignment will be to analyze frequency response measurements on a capacitively coupled amplifier used in a certain communications system. You will be concentrating on the *RC* input circuit of the amplifier and how it responds to different frequencies. The results of the measurements will be graphically documented with a frequency response curve. After studying this chapter, you should be able to complete the application assignment.

VISIT THE COMPANION WEBSITE

Study aids for this chapter are available at http://www.pearsonhighered.com/floyd/

INTRODUCTION

An *RC* circuit, which contains both resistance and capacitance, is one of the basic types of reactive circuits. In this chapter, series and parallel *RC* circuits and their responses to sinusoidal voltages are covered. Series-parallel combinations are also examined. Power considerations in *RC* circuits are introduced, and practical aspects of power ratings are discussed. Three *RC* circuit applications are presented to give you an idea of how simple combinations of resistors and capacitors can be applied. Troubleshooting common faults in *RC* circuits is also covered.

The methods for analyzing reactive circuits are similar to those you studied in dc circuits. Reactive circuit problems can be solved at only one frequency at a time, and phasor math must be used.

Streeter Photography/Alamy

From Chapter 10 of *Electronics Fundamentals: Circuits, Devices, and Applications*, Eighth Edition, Thomas L. Floyd, David M. Buchla. Copyright © 2010 by Pearson Education, Inc. Published by Pearson Prentice Hall. All rights reserved.

www.EngineeringBooksPdf.com

1 SINUSOIDAL RESPONSE OF SERIES *RC* CIRCUITS

When a sinusoidal voltage is applied to a series *RC* circuit, each resulting voltage drop and the current in the circuit(s) are also sinusoidal and have the same frequency as the source voltage. The capacitance causes a phase shift between the voltage and current that depends on the relative values of the resistance and the capacitive reactance.

After completing this section, you should be able to

- **Describe the relationship between current and voltage in a series *RC* circuit**
  - Discuss voltage and current waveforms
  - Discuss phase shift

As shown in Figure 1 for the case of a series *RC* circuit, the resistor voltage (V_R), the capacitor voltage (V_C), and the current (I) are all sine waves with the frequency of the source. Phase shifts are introduced because of the capacitance. As you will learn, the resistor voltage and current are in phase with each other and lead the source voltage in phase. The capacitor voltage lags the source voltage. The phase angle between the current and the capacitor voltage is always 90°. These generalized phase relationships are indicated in Figure 1.

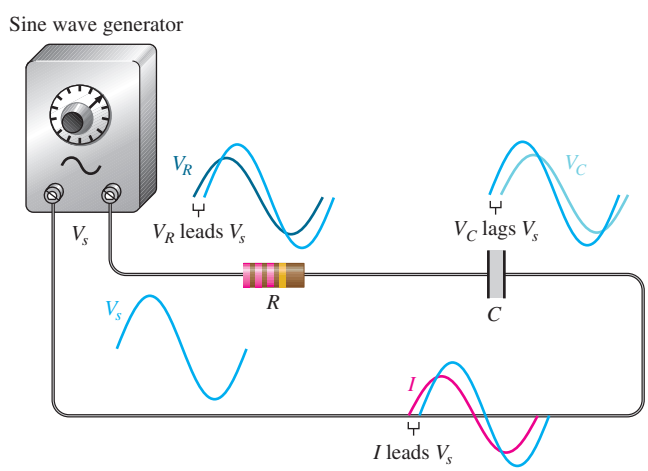

▲ **FIGURE 1**

Illustration of sinusoidal response with general phase relationships of V_R, V_C, and I relative to the source voltage. V_R and I are in phase, and V_R and V_C are 90° out of phase.

The amplitudes and the phase relationships of the voltages and current depend on the values of the resistance and the capacitive reactance. When a circuit is purely resistive, the phase angle between the source voltage and the total current is zero. When a circuit is purely capacitive, the phase angle between the source voltage and the total current is 90°, with the current leading the voltage. When there is a combination of both resistance and capacitive reactance in a circuit, the phase angle between the source voltage and the total current is somewhere between zero and 90°, depending on the relative values of the resistance and the capacitive reactance.

This icon indicates selected websites for further information on topics in this section. See the Companion Website provided with this text.

www.EngineeringBooksPdf.com

SECTION 1 CHECKUP
Answers are at the end of the chapter.

1. A 60 Hz sinusoidal voltage is applied to an *RC* circuit. What is the frequency of the capacitor voltage? What is the frequency of the current?
2. What determines the phase shift between V_s and I in a series *RC* circuit?
3. When the resistance in a series *RC* circuit is greater than the capacitive reactance, is the phase angle between the source voltage and the total current closer to 0° or to 90°?

2 IMPEDANCE AND PHASE ANGLE OF SERIES *RC* CIRCUITS

In circuits where there is no reactance, the opposition to current is strictly resistance. In circuits having both resistance and reactance, the opposition to current is more complex because of the reactance and the resulting phase shift. Impedance, which is the total opposition to ac and includes the effect of phase shift, is introduced in this section.

After completing this section, you should be able to

- **Determine impedance and phase angle in a series *RC* circuit**
  - Define *impedance*
  - Define *phase angle*
  - Draw an impedance triangle
  - Calculate the total impedance magnitude
  - Calculate the phase angle

The **impedance** of a series *RC* circuit consists of resistance and capacitive reactance and is the total opposition to sinusoidal current. Its unit is the ohm. The **phase angle** is the phase difference between the total current and the source voltage.

In a purely resistive circuit, the impedance is simply equal to the total resistance. In a purely capacitive circuit, the impedance is the total capacitive reactance. The impedance of a series *RC* circuit is determined by both the resistance (R) and the capacitive reactance (X_C). These cases are illustrated in Figure 2. The magnitude of the impedance is symbolized by Z.

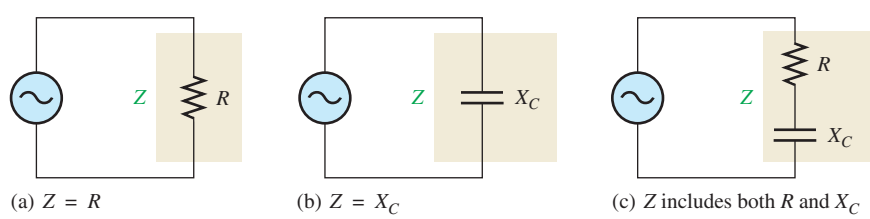

(a) $Z = R$ (b) $Z = X_C$ (c) Z includes both R and X_C

FIGURE 2
Three cases of impedance.

In ac analysis, both R and X_C are treated as phasor quantities, as shown in the phasor diagram of Figure 3(a), with X_C appearing at a $-90°$ angle with respect to R. This relationship comes from the fact that the capacitor voltage in a series *RC* circuit lags the current, and thus the resistor voltage, by 90°. Since Z is the phasor sum of R and X_C, its phasor representation is as shown in Figure 3(b). A repositioning of the phasors, as shown in Figure 3(c), forms a right triangle, which is called the *impedance triangle.* The length of each phasor represents the magnitude in ohms, and the angle θ (the Greek letter theta) is the phase angle of the *RC* circuit and represents the phase difference between the source voltage and the current.

www.EngineeringBooksPdf.com

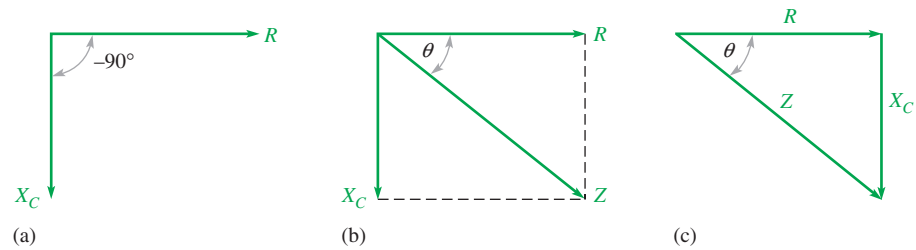

▲ FIGURE 3

Development of the impedance triangle for a series *RC* circuit.

From right-triangle trigonometry (Pythagorean theorem), the magnitude (length) of the impedance can be expressed in terms of the resistance and capacitive reactance.

Equation 1

$$Z = \sqrt{R^2 + X_C^2}$$

The magnitude of the impedance (Z), as shown in the *RC* circuit in Figure 4, is expressed in ohms.

▶ FIGURE 4

Impedance in a series *RC* circuit.

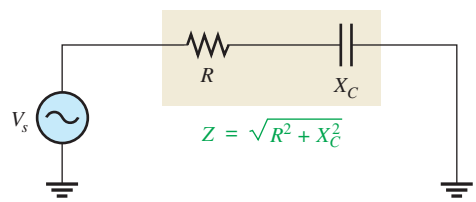

The value of the phase angle, θ, is expressed as

Equation 2

$$\theta = \tan^{-1}\left(\frac{X_C}{R}\right)$$

The symbol $\tan^{-1}$ stands for *inverse tangent* and can be found on most calculators by pressing the 2nd and TAN^{-1} keys. Another term for inverse tangent is *arctangent* (arctan).

EXAMPLE 1

Determine the impedance and the phase angle of the *RC* circuit in Figure 5. Draw the impedance triangle.

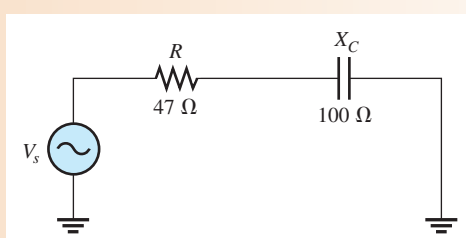

▲ FIGURE 5

Solution The impedance is

$$Z = \sqrt{R^2 + X_C^2} = \sqrt{(47\ \Omega)^2 + (100\ \Omega)^2} = \mathbf{110\ \Omega}$$

www.EngineeringBooksPdf.com

The phase angle is

$$\theta = \tan^{-1}\left(\frac{X_C}{R}\right) = \tan^{-1}\left(\frac{100\ \Omega}{47\ \Omega}\right) = \tan^{-1}(2.13) = \mathbf{64.8°}$$

The source voltage lags the current by 64.8°.

The impedance triangle is shown in Figure 6.

▶ FIGURE 6

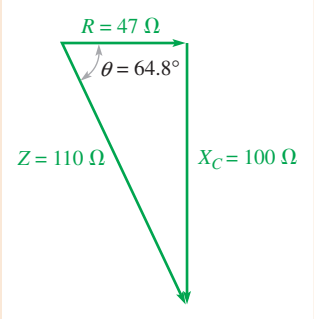

*Related Problem** Find Z and θ for $R = 1.0\ \text{k}\Omega$ and $X_C = 2.2\ \text{k}\Omega$ in Figure 5.

*Answers are at the end of the chapter.

SECTION 2 CHECKUP

1. Define *impedance.*
2. Does the source voltage lead or lag the current in a series *RC* circuit?
3. What causes the phase angle in an *RC* circuit?
4. A series *RC* circuit has a resistance of 33 kΩ and a capacitive reactance of 50 kΩ. What is the value of the impedance? What is the phase angle?

3 ANALYSIS OF SERIES *RC* CIRCUITS

Ohm's law and Kirchhoff's voltage law are used in the analysis of series *RC* circuits to determine voltage, current, and impedance. Also, in this section *RC* lead and lag circuits are examined.

After completing this section, you should be able to

- **Analyze a series *RC* circuit**
  - Apply Ohm's law and Kirchhoff's voltage law to series *RC* circuits
  - Determine the phase relationships of the voltages and current
  - Show how impedance and phase angle vary with frequency
  - Analyze the *RC* lag circuit
  - Analyze the *RC* lead circuit

www.EngineeringBooksPdf.com

Ohm's Law

The application of Ohm's law to series *RC* circuits involves the use of the quantities of *Z*, *V*, and *I*. The three equivalent forms of Ohm's law are as follows:

Equation 3
$$V = IZ$$

Equation 4
$$I = \frac{V}{Z}$$

Equation 5
$$Z = \frac{V}{I}$$

The following two examples illustrate the use of Ohm's law.

EXAMPLE 2

The current in Figure 7 is 0.2 mA. Determine the source voltage and the phase angle. Draw the impedance triangle.

▶ FIGURE 7

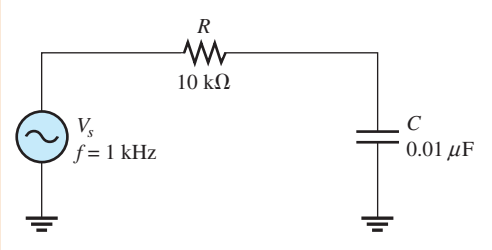

Solution The capacitive reactance is

$$X_C = \frac{1}{2\pi fC} = \frac{1}{2\pi(1000\text{ Hz})(0.01\ \mu\text{F})} = 15.9\text{ k}\Omega$$

The impedance is

$$Z = \sqrt{R^2 + X_C^2} = \sqrt{(10\text{ k}\Omega)^2 + (15.9\text{ k}\Omega)^2} = 18.8\text{ k}\Omega$$

Applying Ohm's law yields

$$V_s = IZ = (0.2\text{ mA})(18.8\text{ k}\Omega) = \mathbf{3.76\ V}$$

The phase angle is

$$\theta = \tan^{-1}\left(\frac{X_C}{R}\right) = \tan^{-1}\left(\frac{15.9\text{ k}\Omega}{10\text{ k}\Omega}\right) = \mathbf{57.8°}$$

The source voltage has a magnitude of 3.76 V and lags the current by 57.8°.

The impedance triangle is shown in Figure 8.

▶ FIGURE 8

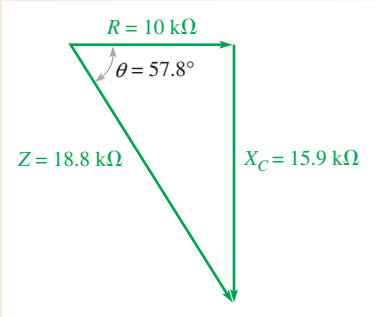

Related Problem Determine V_s in Figure 7 if $f = 2$ kHz and $I = 200\ \mu$A.

www.EngineeringBooksPdf.com

EXAMPLE 3

Determine the current in the *RC* circuit of Figure 9.

▶ FIGURE 9

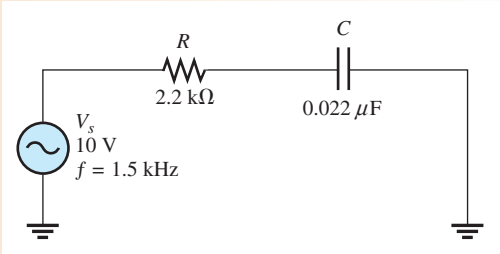

Solution The capacitive reactance is

$$X_C = \frac{1}{2\pi fC} = \frac{1}{2\pi(1.5\text{ kHz})(0.022\ \mu\text{F})} = 4.82\text{ k}\Omega$$

The impedance is

$$Z = \sqrt{R^2 + X_C^2} = \sqrt{(2.2\text{ k}\Omega)^2 + (4.82\text{ k}\Omega)^2} = 5.30\text{ k}\Omega$$

Applying Ohm's law yields

$$I = \frac{V}{Z} = \frac{10\text{ V}}{5.30\text{ k}\Omega} = \mathbf{1.89\ mA}$$

Related Problem Determine the phase angle between V_s and I in Figure 9.

Open Multisim file E10-03; files are found at www.pearsonhighered.com/floyd/. Measure the current and the voltages across the resistor and the capacitor.

Phase Relationships of the Current and Voltages

In a series *RC* circuit, the current is the same through both the resistor and the capacitor. Thus, the resistor voltage is in phase with the current, and the capacitor voltage lags the current by 90°. Therefore, there is a phase difference of 90° between the resistor voltage, V_R, and the capacitor voltage, V_C, as shown in the waveform diagram of Figure 10.

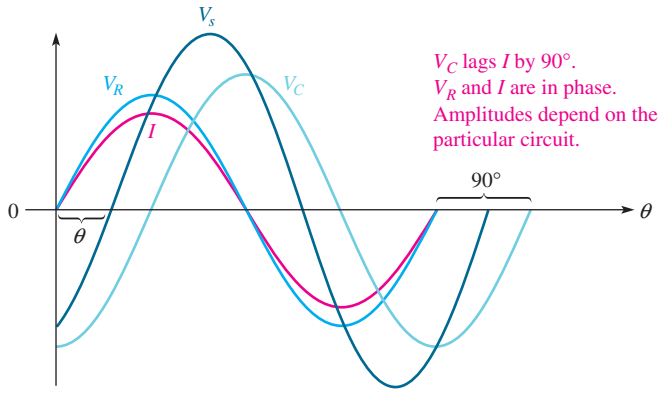

▲ FIGURE 10

Phase relation of the voltages and current in a series *RC* circuit.

www.EngineeringBooksPdf.com

You know from Kirchhoff's voltage law that the sum of the voltage drops must equal the source voltage. However, since V_R and V_C are 90° out of phase with each other, they must be added as phasor quantities, with V_C lagging V_R, as shown in Figure 11(a). As shown in Figure 11(b), V_s is the phasor sum of V_R and V_C, as expressed in the following equation:

Equation 6

$$V_s = \sqrt{V_R^2 + V_C^2}$$

▶ **FIGURE 11**

Voltage phasor diagram for the waveforms in Figure 10.

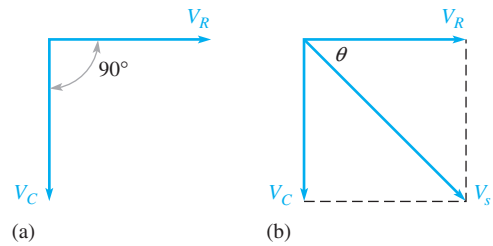

The value of the phase angle between the resistor voltage and the source voltage can be expressed as

Equation 7

$$\theta = \tan^{-1}\left(\frac{V_C}{V_R}\right)$$

Since the resistor voltage and the current are in phase, θ in Equation 7 also represents the phase angle between the source voltage and the current and is equivalent to $\tan^{-1}(X_C/R)$.

Figure 12 shows the voltage and current phasor diagram that represents the waveform diagram of Figure 10.

▶ **FIGURE 12**

Voltage and current phasor diagram for the waveforms in Figure 10.

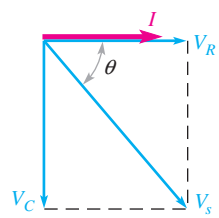

EXAMPLE 4

Determine the source voltage and the phase angle in Figure 13. Draw the voltage phasor diagram.

▶ **FIGURE 13**

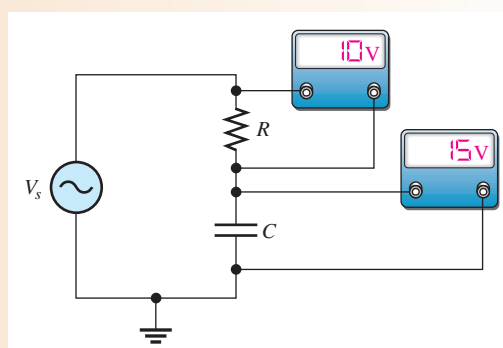

Solution Since V_R and V_C are 90° out of phase, you cannot add them directly. The source voltage is the phasor sum of V_R and V_C.

$$V_s = \sqrt{V_R^2 + V_C^2} = \sqrt{(10\text{ V})^2 + (15\text{ V})^2} = \mathbf{18\ V}$$

www.EngineeringBooksPdf.com

The phase angle between the resistor voltage and the source voltage is

$$\theta = \tan^{-1}\left(\frac{V_C}{V_R}\right) = \tan^{-1}\left(\frac{15\text{ V}}{10\text{ V}}\right) = \mathbf{56.3°}$$

The voltage phasor diagram is shown in Figure 14.

▶ FIGURE 14

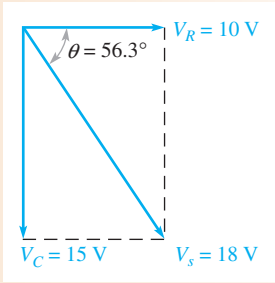

Related Problem In a certain series *RC* circuit, $V_s = 10$ V and $V_R = 7$ V. Find V_C.

Variation of Impedance and Phase Angle with Frequency

As you know, capacitive reactance varies inversely with frequency. Since $Z = \sqrt{R^2 + X_C^2}$, you can see that when X_C increases, the entire term under the square root sign increases and thus the total impedance also increases; and when X_C decreases, the total impedance also decreases. Therefore, *in a series RC circuit, Z is inversely dependent on frequency.*

Figure 15 illustrates how the voltages and current in a series *RC* circuit vary as the frequency increases or decreases, with the source voltage held at a constant value. Part (a) shows that as the frequency is increased, X_C decreases; so the voltage across the capacitor decreases. Also, Z decreases as X_C decreases, causing the current to increase. An increase in the current causes more voltage across R.

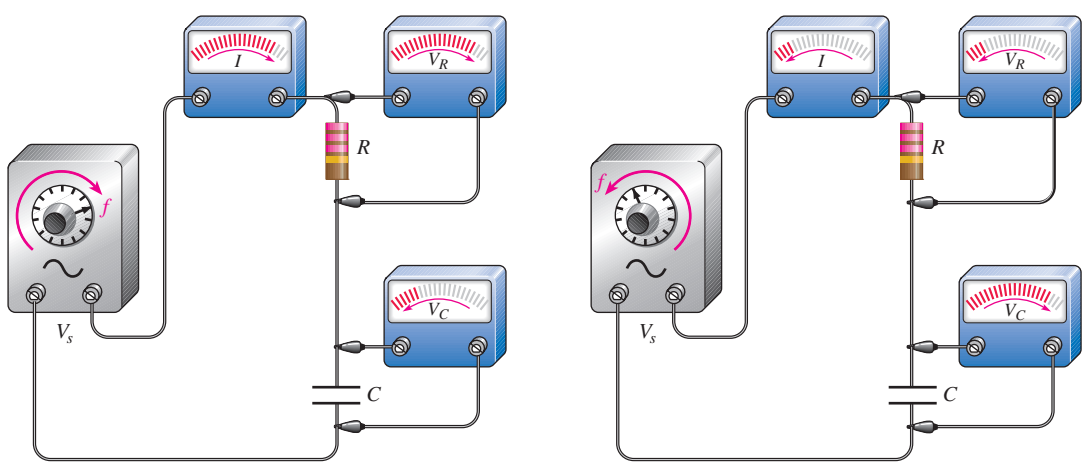

(a) As frequency is increased, Z decreases as X_C decreases, causing I and V_R to increase and V_C to decrease.

(b) As frequency is decreased, Z increases as X_C increases, causing I and V_R to decrease and V_C to increase.

▲ FIGURE 15

An illustration of how the variation of impedance affects the voltages and current as the source frequency is varied. The source voltage is held at a constant amplitude.

www.EngineeringBooksPdf.com

Figure 15(b) shows that as the frequency is decreased, X_C increases; so more voltage is dropped across the capacitor. Also, Z increases as X_C increases, causing the current to decrease. A decrease in the current causes less voltage across R.

Changes in Z and X_C can be observed as shown in Figure 16. As the frequency increases, the voltage across Z remains constant because V_s is constant ($V_s = V_Z$). Also, the voltage across C decreases. The increasing current indicates that Z is decreasing. It does so because of the inverse relationship stated in Ohm's law ($Z = V_Z/I$). The increasing current also indicates that X_C is decreasing ($X_C = V_C/I$). The decrease in V_C corresponds to the decrease in X_C.

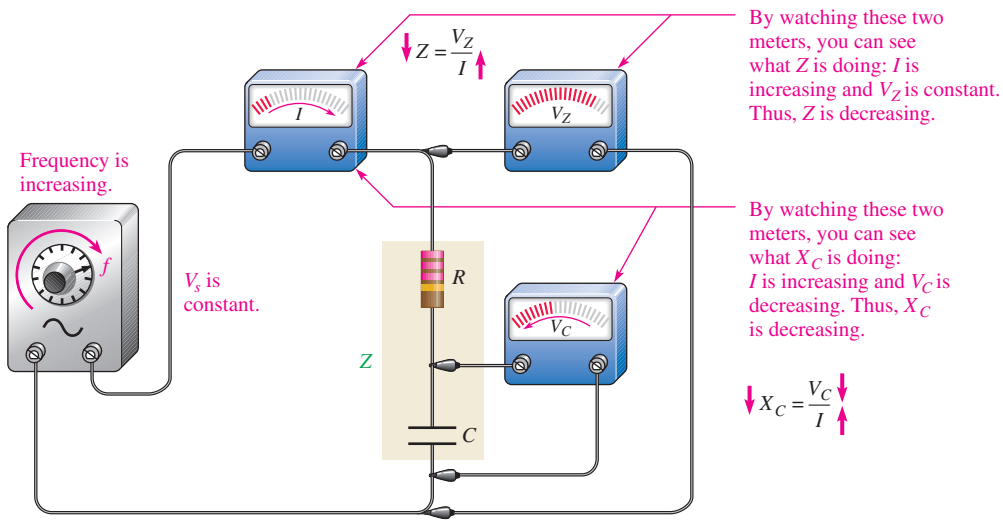

▲ **FIGURE 16**

An illustration of how Z and X_C change with frequency.

Since X_C is the factor that introduces the phase angle in a series RC circuit, a change in X_C produces a change in the phase angle. As the frequency is increased, X_C becomes smaller, and thus the phase angle decreases. As the frequency is decreased, X_C becomes larger, and thus the phase angle increases. The angle between V_s and V_R is the phase angle of the circuit because I is in phase with V_R.

Figure 17 uses the impedance triangle to illustrate the variations in X_C, Z, and θ as the frequency changes. Of course, R remains constant. The key point is that because X_C varies inversely with the frequency, the magnitude of the total impedance and the phase angle also vary inversely with the frequency. Example 5 illustrates this.

▶ **FIGURE 17**

As the frequency increases, X_C decreases, Z decreases, and θ decreases. Each value of frequency can be visualized as forming a different impedance triangle.

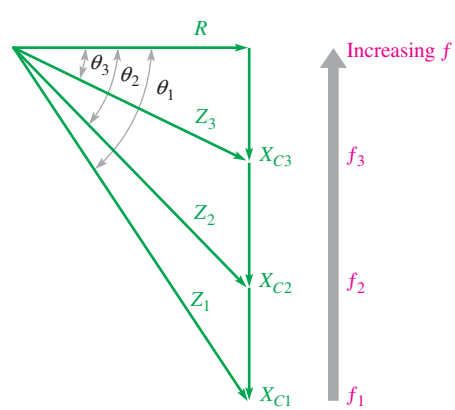

www.EngineeringBooksPdf.com

EXAMPLE 5

For the series *RC* circuit in Figure 18, determine the impedance and phase angle for each of the following values of frequency:

(a) 10 kHz **(b)** 20 kHz **(c)** 30 kHz

▶ FIGURE 18

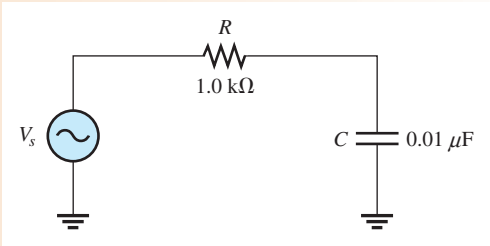

Solution **(a)** For $f = 10$ kHz, calculate the impedance as follows:

$$X_C = \frac{1}{2\pi fC} = \frac{1}{2\pi(10\text{ kHz})(0.01\ \mu\text{F})} = 1.59\text{ k}\Omega$$

$$Z = \sqrt{R^2 + X_C^2} = \sqrt{(1.0\text{ k}\Omega)^2 + (1.59\text{ k}\Omega)^2} = \mathbf{1.88\ k\Omega}$$

The phase angle is

$$\theta = \tan^{-1}\left(\frac{X_C}{R}\right) = \tan^{-1}\left(\frac{1.59\text{ k}\Omega}{1.0\text{ k}\Omega}\right) = \mathbf{57.8°}$$

(b) For $f = 20$ kHz,

$$X_C = \frac{1}{2\pi(20\text{ kHz})(0.01\ \mu\text{F})} = 796\ \Omega$$

$$Z = \sqrt{(1.0\text{ k}\Omega)^2 + (796\ \Omega)^2} = \mathbf{1.28\ k\Omega}$$

$$\theta = \tan^{-1}\left(\frac{796\ \Omega}{1.0\text{ k}\Omega}\right) = \mathbf{38.5°}$$

(c) For $f = 30$ kHz,

$$X_C = \frac{1}{2\pi(30\text{ kHz})(0.01\ \mu\text{F})} = 531\ \Omega$$

$$Z = \sqrt{(1.0\text{ k}\Omega)^2 + (531\ \Omega)^2} = \mathbf{1.13\ k\Omega}$$

$$\theta = \tan^{-1}\left(\frac{531\ \Omega}{1.0\text{ k}\Omega}\right) = \mathbf{28.0°}$$

Notice that as the frequency increases, X_C, Z, and θ decrease.

Related Problem Find the total impedance and phase angle in Figure 18 for $f = 1$ kHz.

RC Lag Circuit

An ***RC* lag circuit** is a phase shift circuit in which the output voltage lags the input voltage by a specified angle, ϕ. Phase shift circuits are commonly used in electronic communication systems and for other applications.

A basic series *RC* lag circuit is shown in Figure 19(a). Keep in mind that phase angle θ is measured between the source (input) voltage and the current. In terms of voltages, this is equivalent to saying the phase angle is measured between V_{in} and V_R because current and voltage are in phase in a resistor. The output is taken across the capacitor; therefore, the

www.EngineeringBooksPdf.com

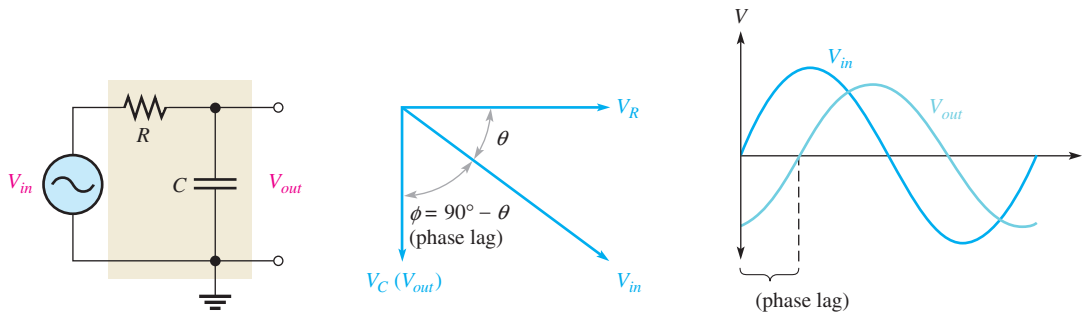

(a) A basic *RC* lag circuit

(b) Phasor voltage diagram showing the phase lag between V_{in} and V_{out}

(c) Input and output voltage waveforms

▲ **FIGURE 19**

The *RC* lag circuit ($V_{out} = V_C$).

phase lag between V_{in} and V_C is $90° - \theta$. This angle is designated as ϕ and represents the phase difference between the input (V_{in}) and the output (V_{out}), as shown in Figure 19(b).

Since $\theta = \tan^{-1}(X_C/R)$, the value of the phase lag, ϕ, can be expressed as

Equation 8

$$\phi = 90° - \tan^{-1}\left(\frac{X_C}{R}\right)$$

The input and output voltage waveforms of the lag circuit are shown in Figure 19(c). The exact amount of phase lag between the input and the output depends on the values of the resistance and the capacitive reactance. The magnitude of the output voltage depends on these values also.

EXAMPLE 6

Determine the amount of phase lag from input to output in the lag circuit in Figure 20.

▶ **FIGURE 20**

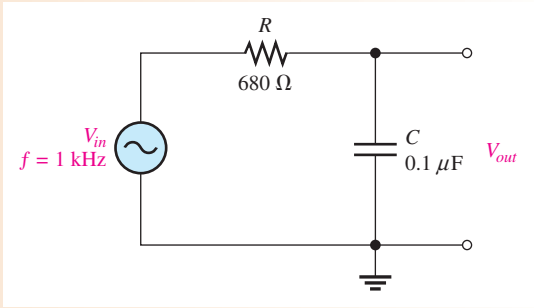

Solution First determine the capacitive reactance.

$$X_C = \frac{1}{2\pi fC} = \frac{1}{2\pi(1\text{ kHz})(0.1\ \mu\text{F})} = 1.59\text{ k}\Omega$$

The phase lag between the output voltage and the input voltage is

$$\phi = 90° - \tan^{-1}\left(\frac{X_C}{R}\right) = 90° - \tan^{-1}\left(\frac{1.59\text{ k}\Omega}{680\ \Omega}\right) = \mathbf{23.2°}$$

The output voltage lags the input voltage by 23.2°.

Related Problem In a lag circuit, what happens to the phase lag if the frequency increases?

www.EngineeringBooksPdf.com

The phase-lag circuit can be considered as a voltage divider with a portion of the input voltage dropped across R and a portion across C. The output voltage can be determined with the following formula:

$$V_{out} = \left(\frac{X_C}{\sqrt{R^2 + X_C^2}}\right)V_{in} \qquad \text{Equation 9}$$

EXAMPLE 7

For the lag circuit in Figure 20 of Example 6, determine the output voltage when the input voltage has an rms value of 10 V. Draw the input and output waveforms showing the proper relationships. The values for X_C (1.59 kΩ) and ϕ (23.2°) were found in Example 6.

Solution Use Equation 9 to determine the output voltage for the lag circuit in Figure 20.

$$V_{out} = \left(\frac{X_C}{\sqrt{R^2 + X_C^2}}\right)V_{in} = \left(\frac{1.59\text{ k}\Omega}{\sqrt{(680\ \Omega)^2 + (1.59\text{ k}\Omega)^2}}\right)10\text{ V} = \mathbf{9.2\ V\ rms}$$

The waveforms are shown in Figure 21.

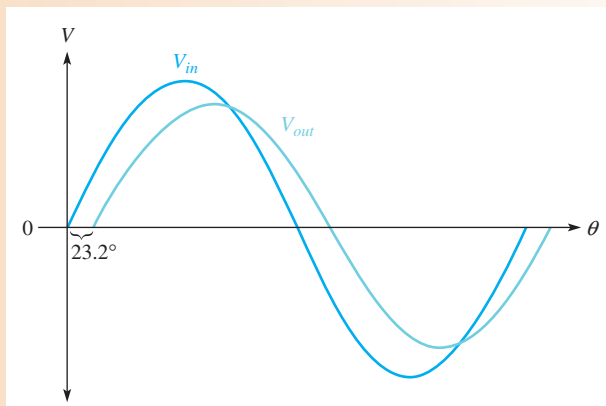

▲ FIGURE 21

Related Problem In a lag circuit, what happens to the output voltage if the frequency increases?

Effects of Frequency on the Lag Circuit Since the circuit phase angle, θ, decreases as frequency increases, the phase lag ϕ between the input and the output voltages increases. You can see this relationship by examining Equation 8. Also, the magnitude of V_{out} decreases as the frequency increases because X_C becomes smaller and less of the total input voltage is dropped across the capacitor.

RC Lead Circuit

An ***RC* lead circuit** is a phase shift circuit in which the output voltage leads the input voltage by a specified angle, ϕ. A basic *RC* lead circuit is shown in Figure 22(a). Notice how it differs from the lag circuit. Here the output voltage is taken across the resistor. The relationship of the voltages is given in the phasor diagram in Figure 22(b). The output voltage, V_{out}, leads V_{in} by an angle that is the same as the circuit phase angle because V_R and I are in phase with each other.

www.EngineeringBooksPdf.com

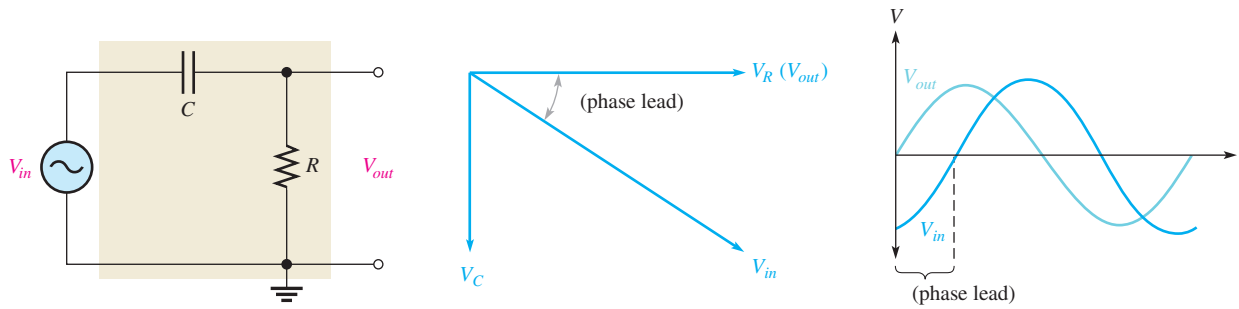

(a) A basic *RC* lead circuit

(b) Phasor voltage diagram showing the phase lead between V_{in} and V_{out}

(c) Input and output voltage waveforms

▲ **FIGURE 22**

The *RC* lead circuit ($V_{out} = V_R$).

When the input and output waveforms are displayed on an oscilloscope, a relationship similar to that in Figure 22(c) is observed. Of course, the exact amount of phase lead and the output voltage magnitude depend on the values of R and X_C. The value of the phase lead, ϕ, is expressed as

Equation 10

$$\phi = \tan^{-1}\left(\frac{X_C}{R}\right)$$

The output voltage is expressed as

Equation 11

$$V_{out} = \left(\frac{R}{\sqrt{R^2 + X_C^2}}\right)V_{in}$$

EXAMPLE 8

Calculate the phase lead and the output voltage for the circuit in Figure 23.

▶ **FIGURE 23**

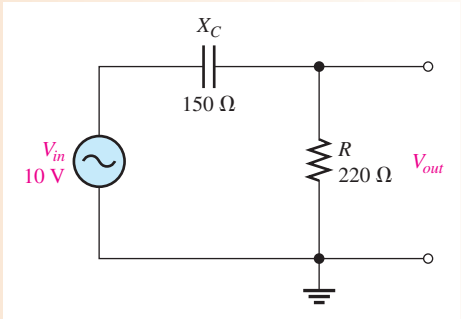

Solution The phase lead is

$$\phi = \tan^{-1}\left(\frac{X_C}{R}\right) = \tan^{-1}\left(\frac{150\ \Omega}{220\ \Omega}\right) = \mathbf{34.3°}$$

The output leads the input by 34.3°.

Use Equation 11 to determine the output voltage.

$$V_{out} = \left(\frac{R}{\sqrt{R^2 + X_C^2}}\right)V_{in} = \left(\frac{220\ \Omega}{\sqrt{(220\ \Omega)^2 + (150\ \Omega)^2}}\right)10\text{ V} = \mathbf{8.26\ V}$$

Related Problem How does an increase in R affect the phase lead and the output voltage in Figure 23?

www.EngineeringBooksPdf.com

Effects of Frequency on the Lead Circuit Since the phase lead is the same as the circuit phase angle θ, it decreases as frequency increases. The output voltage increases with frequency because as X_C becomes smaller, more of the input voltage is dropped across the resistor.

SECTION 3 CHECKUP

1. In a certain series *RC* circuit, $V_R = 4$ V and $V_C = 6$ V. What is the magnitude of the source voltage?
2. In Question 1, what is the phase angle?
3. What is the phase difference between the capacitor voltage and the resistor voltage in a series *RC* circuit?
4. When the frequency of the source voltage in a series *RC* circuit is increased, what happens to each of the following?
   (a) the capacitive reactance (b) the impedance (c) the phase angle
5. A certain *RC* lag circuit consists of a 4.7 kΩ resistor and a 0.022 μF capacitor. Determine the phase lag between the input and output voltages at a frequency of 3 kHz.
6. An *RC* lead circuit has the same component values as the lag circuit in Question 5. What is the magnitude of the output voltage at 3 kHz when the input is 10 V rms?

4 IMPEDANCE AND PHASE ANGLE OF PARALLEL *RC* CIRCUITS

In this section, you will learn how to determine the impedance and phase angle of a parallel *RC* circuit. Also conductance (G), capacitive susceptance (B_C), and total admittance (Y_{tot}) are discussed because of their usefulness in parallel circuit analysis.

After completing this section, you should be able to

- **Determine impedance and phase angle in a parallel *RC* circuit**
  - Express total impedance in a product-over-sum form
  - Express the phase angle in terms of R and X_C
  - Determine the conductance, capacitive susceptance, and admittance
  - Convert admittance to impedance

Figure 24 shows a basic parallel *RC* circuit.

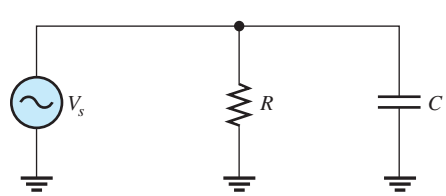

◀ FIGURE 24
Parallel *RC* circuit.

The expression for the impedance in Equation 12 is given in a product-over-sum form similar to the way two resistors in parallel can be expressed. In this case, the denominator is the phasor sum of R and X_C.

$$Z = \frac{RX_C}{\sqrt{R^2 + X_C^2}} \qquad \text{Equation 12}$$

www.EngineeringBooksPdf.com

The value of the phase angle between the source voltage and the total current can be expressed in terms of R and X_C as shown in Equation 13.

Equation 13

$$\theta = \tan^{-1}\left(\frac{R}{X_C}\right)$$

This formula is derived from an equivalent formula using branch currents (Eq. 22), which is introduced in Section 5.

EXAMPLE 9

For each circuit in Figure 25, determine the impedance and the phase angle.

▶ **FIGURE 25**

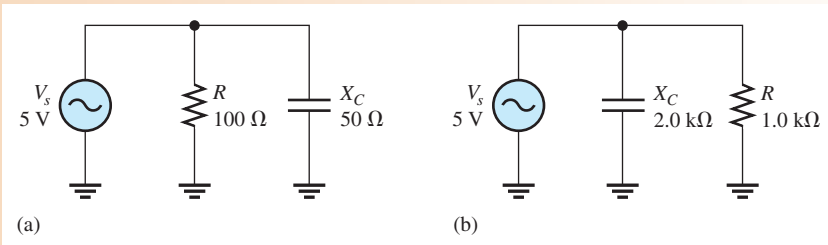

Solution For the circuit in Figure 25(a), the impedance and phase angle are

$$Z = \frac{RX_C}{\sqrt{R^2 + X_C^2}} = \frac{(100\ \Omega)(50\ \Omega)}{\sqrt{(100\ \Omega)^2 + (50\ \Omega)^2}} = \mathbf{44.7\ \Omega}$$

$$\theta = \tan^{-1}\left(\frac{R}{X_C}\right) = \tan^{-1}\left(\frac{100\ \Omega}{50\ \Omega}\right) = \mathbf{63.4°}$$

For the circuit in Figure 25(b),

$$Z = \frac{(1.0\ \text{k}\Omega)(2.0\ \text{k}\Omega)}{\sqrt{(1.0\ \text{k}\Omega)^2 + (2.0\ \text{k}\Omega)^2}} = \mathbf{894\ \Omega}$$

$$\theta = \tan^{-1}\left(\frac{1.0\ \text{k}\Omega}{2.0\ \text{k}\Omega}\right) = \mathbf{26.6°}$$

Related Problem Determine Z in Figure 25(a) if the frequency is doubled.

Conductance, Capacitive Susceptance, and Admittance

Recall that **conductance (G)** is the reciprocal of resistance and is expressed as

Equation 14

$$G = \frac{1}{R}$$

Two new terms are now introduced for use in parallel RC circuits. Susceptance is the reciprocal of reactance; therefore, **capacitive susceptance (B_C)** is the reciprocal of capacitive reactance and is a measure of the ability of a capacitor to permit current. It is expressed as

Equation 15

$$B_C = \frac{1}{X_C}$$

Admittance (Y) is the reciprocal of impedance and is expressed as

Equation 16

$$Y = \frac{1}{Z}$$

The unit of each of these three quantities is the siemens (S), which is the reciprocal of the ohm.

www.EngineeringBooksPdf.com

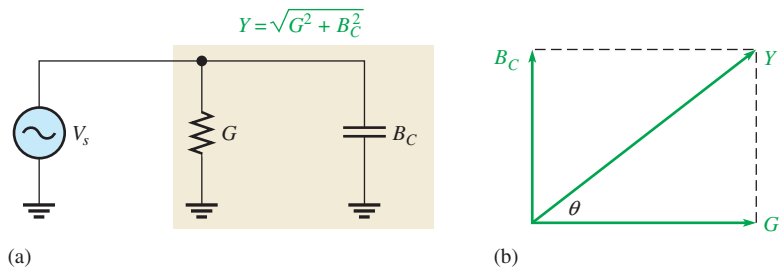

FIGURE 26

Admittance in a parallel *RC* circuit.

In working with parallel circuits, it is often easier to use conductance (G), capacitive susceptance (B_C), and admittance (Y) rather than resistance (R), capacitive reactance (X_C) and impedance (Z). In a parallel *RC* circuit, as shown in Figure 26(a), the total admittance is the phasor sum of the conductance and the capacitive susceptance, as shown in Figure 26(b).

$$Y_{tot} = \sqrt{G^2 + B_C^2} \qquad \text{Equation 17}$$

EXAMPLE 10

Determine the total admittance in Figure 27, and then convert it to impedance.

FIGURE 27

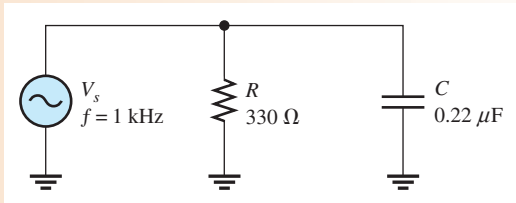

Solution To determine Y, first calculate the values for G and B_C. Since $R = 330\ \Omega$,

$$G = \frac{1}{R} = \frac{1}{330\ \Omega} = 3.03\ \text{mS}$$

The capacitive reactance is

$$X_C = \frac{1}{2\pi fC} = \frac{1}{2\pi(1000\ \text{Hz})(0.22\ \mu\text{F})} = 723\ \Omega$$

The capacitive susceptance is

$$B_C = \frac{1}{X_C} = \frac{1}{723\ \Omega} = 1.38\ \text{mS}$$

Therefore, the total admittance is

$$Y_{tot} = \sqrt{G^2 + B_C^2} = \sqrt{(3.03\ \text{mS})^2 + (1.38\ \text{mS})^2} = \mathbf{3.33\ mS}$$

Convert to impedance.

$$Z = \frac{1}{Y_{tot}} = \frac{1}{3.33\ \text{mS}} = \mathbf{300\ \Omega}$$

Related Problem Calculate the admittance in Figure 7 if f is increased to 2.5 kHz.

SECTION 4 CHECKUP

1. Determine Z if a 1.0 kΩ resistance is in parallel with a 650 Ω capacitive reactance.
2. Define *conductance, capacitive susceptance,* and *admittance.*
3. If $Z = 100\ \Omega$, what is the value of Y?
4. In a certain parallel *RC* circuit, $R = 50\ \Omega$ and $X_C = 75\ \Omega$. Determine Y.

www.EngineeringBooksPdf.com

5 ANALYSIS OF PARALLEL *RC* CIRCUITS

Ohm's law and Kirchhoff's current law are used in the analysis of *RC* circuits. Current and voltage relationships in a parallel *RC* circuit are examined.

After completing this section, you should be able to

- **Analyze a parallel *RC* circuit**
  - Apply Ohm's law and Kirchhoff's current law to parallel *RC* circuits
  - Show how impedance and phase angle vary with frequency
  - Convert from a parallel circuit to an equivalent series circuit

For convenience in the analysis of parallel circuits, the Ohm's law formulas using impedance—Equations 3, 4, and 5—can be rewritten for admittance using the relation $Y = 1/Z$.

Equation 18

$$V = \frac{I}{Y}$$

Equation 19

$$I = VY$$

Equation 20

$$Y = \frac{I}{V}$$

EXAMPLE 11

Determine the total current and the phase angle in Figure 28.

▶ FIGURE 28

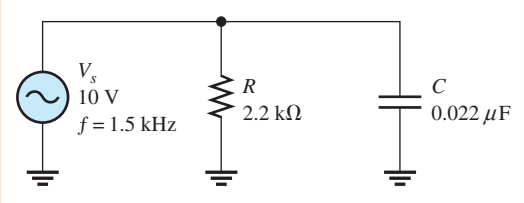

Solution First, determine the total admittance. The capacitive reactance is

$$X_C = \frac{1}{2\pi fC} = \frac{1}{2\pi(1.5\text{ kHz})(0.022\ \mu\text{F})} = 4.82\text{ k}\Omega$$

The conductance is

$$G = \frac{1}{R} = \frac{1}{2.2\text{ k}\Omega} = 455\ \mu\text{S}$$

The capacitive susceptance is

$$B_C = \frac{1}{X_C} = \frac{1}{4.82\text{ k}\Omega} = 207\ \mu\text{S}$$

Therefore, the total admittance is

$$Y_{tot} = \sqrt{G^2 + B_C^2} = \sqrt{(455\ \mu\text{S})^2 + (207\ \mu\text{S})^2} = 500\ \mu\text{S}$$

www.EngineeringBooksPdf.com

Next, use Ohm's law to calculate the total current.

$$I_{tot} = VY_{tot} = (10\text{ V})(500\ \mu\text{S}) = \mathbf{5.00\ mA}$$

The phase angle is

$$\theta = \tan^{-1}\left(\frac{R}{X_C}\right) = \tan^{-1}\left(\frac{2.2\text{ k}\Omega}{4.82\text{ k}\Omega}\right) = \mathbf{24.5°}$$

The total current is 5.00 mA, and it leads the source voltage by 24.5°.

Related Problem What is the total current if the frequency is doubled?

Open Multisim file E10-11. Verify the value of the total current that was calculated. Then measure each branch current. Double the frequency to 3 kHz and measure the total current.

Phase Relationships of the Currents and Voltages

Figure 29(a) shows all the currents and voltages in a basic parallel *RC* circuit. As you can see, the source voltage, V_s, appears across both the resistive and the capacitive branches, so V_s, V_R, and V_C are all in phase and of the same magnitude. The total current, I_{tot}, divides at the junction into the two branch currents, I_R and I_C.

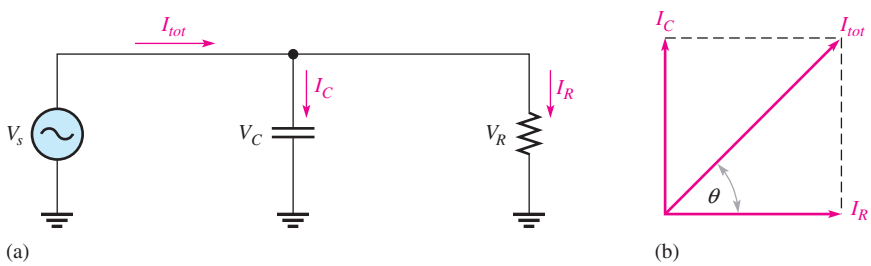

▲ **FIGURE 29**

Currents and voltages in a parallel *RC* circuit. The current directions shown in (a) are instantaneous and, of course, reverse when the source voltage reverses. The current phasors in (b) rotate once per cycle.

The current through the resistor is in phase with the voltage. The current through the capacitor leads the voltage, and thus the resistive current, by 90°. By Kirchhoff's current law, the total current is the phasor sum of the two branch currents, as shown by the phasor diagram in Figure 29(b). The total current is expressed as

$$I_{tot} = \sqrt{I_R^2 + I_C^2} \qquad \text{Equation 21}$$

The value of the phase angle between the resistor current and the total current is

$$\theta = \tan^{-1}\left(\frac{I_C}{I_R}\right) \qquad \text{Equation 22}$$

Equation 22 is equivalent to Equation 13, $\theta = \tan^{-1}(R/X_C)$.

Figure 30 shows a complete current and voltage phasor diagram. Notice that I_C leads I_R by 90° and that I_R is in phase with the voltage ($V_s = V_R = V_C$).

www.EngineeringBooksPdf.com

▶ FIGURE 30

Current and voltage phasor diagram for a parallel *RC* circuit (amplitudes depend on the particular circuit).

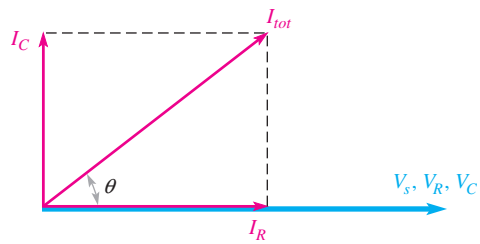

EXAMPLE 12

Determine the value of each current in Figure 31, and describe the phase relationship of each with the source voltage. Draw the current phasor diagram.

▶ FIGURE 31

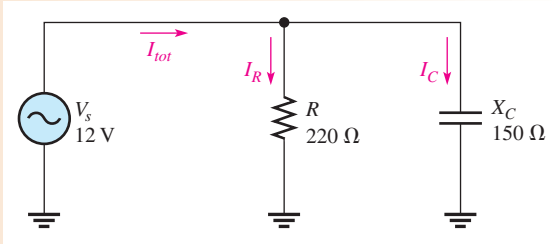

Solution The resistor current, the capacitor current, and the total current are expressed as follows:

$$I_R = \frac{V_s}{R} = \frac{12\text{ V}}{220\ \Omega} = \mathbf{54.5\ mA}$$

$$I_C = \frac{V_s}{X_C} = \frac{12\text{ V}}{150\ \Omega} = \mathbf{80\ mA}$$

$$I_{tot} = \sqrt{I_R^2 + I_C^2} = \sqrt{(54.5\text{ mA})^2 + (80\text{ mA})^2} = \mathbf{96.8\ mA}$$

The phase angle is

$$\theta = \tan^{-1}\left(\frac{I_C}{I_R}\right) = \tan^{-1}\left(\frac{80\text{ mA}}{54.5\text{ mA}}\right) = 55.7°$$

I_R is in phase with the source voltage, I_C leads the source voltage by 90°, and I_{tot} leads the source voltage by 55.7°. The current phasor diagram is shown in Figure 32.

▶ FIGURE 32

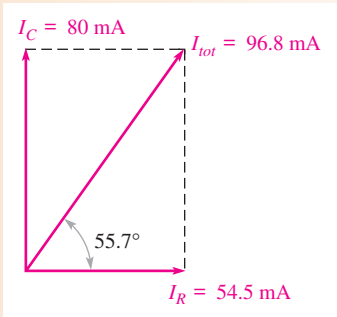

Related Problem In a certain parallel circuit, $I_R = 100$ mA and $I_C = 60$ mA. Determine the total current and the phase angle.

Conversion from Parallel to Series Form

For every parallel *RC* circuit, there is an equivalent series *RC* circuit for any one frequency. Two circuits are equivalent when they both present an equal impedance and phase angle.

www.EngineeringBooksPdf.com

To obtain the equivalent series circuit for a given parallel *RC* circuit, first find the impedance and phase angle of the parallel circuit. Then use the values of Z and θ to construct an impedance triangle, shown in Figure 33. The vertical and horizontal sides of the triangle represent the equivalent series resistance and capacitive reactance as indicated. You can find these values by using the following trigonometric relationships:

$$R_{eq} = Z\cos\theta \qquad \text{Equation 23}$$

$$X_{C(eq)} = Z\sin\theta \qquad \text{Equation 24}$$

The cosine (cos) and the sine (sin) functions are available on any scientific calculator.

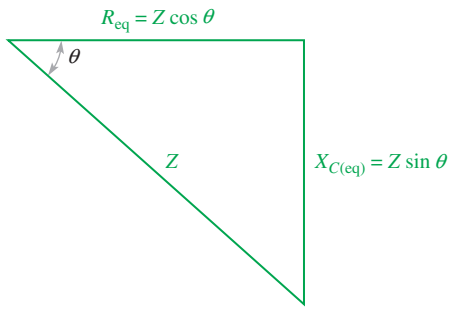

FIGURE 33

Impedance triangle for the series equivalent of a parallel *RC* circuit. Z and θ are the known values for the parallel circuit. R_{eq} and $X_{C(eq)}$ are the series equivalent values.

EXAMPLE 13

Convert the parallel circuit in Figure 34 to an equivalent series form.

FIGURE 34

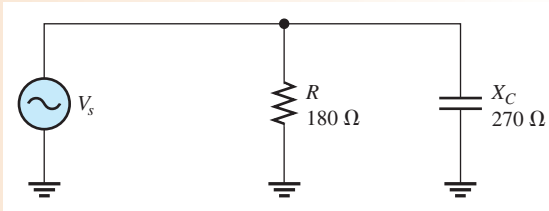

Solution First, find the total admittance of the parallel circuit as follows:

$$G = \frac{1}{R} = \frac{1}{180\,\Omega} = 5.56\text{ mS}$$

$$B_C = \frac{1}{X_C} = \frac{1}{270\,\Omega} = 3.70\text{ mS}$$

$$Y_{tot} = \sqrt{G^2 + B_C^2} = \sqrt{(5.56\text{ mS})^2 + (3.70\text{ mS})^2} = 6.68\text{ mS}$$

Then, the total impedance is

$$Z_{tot} = \frac{1}{Y_{tot}} = \frac{1}{6.68\text{ mS}} = 150\,\Omega$$

The phase angle is

$$\theta = \tan^{-1}\left(\frac{R}{X_C}\right) = \tan^{-1}\left(\frac{180\,\Omega}{270\,\Omega}\right) = 33.6°$$

The equivalent series values are

$$R_{eq} = Z\cos\theta = (150\,\Omega)\cos(33.6°) = \mathbf{125\,\Omega}$$

$$X_{C(eq)} = Z\sin\theta = (150\,\Omega)\sin(33.6°) = \mathbf{83\,\Omega}$$

www.EngineeringBooksPdf.com

The series equivalent circuit is shown in Figure 35. The value of C can only be determined if the frequency is known.

▶ FIGURE 35

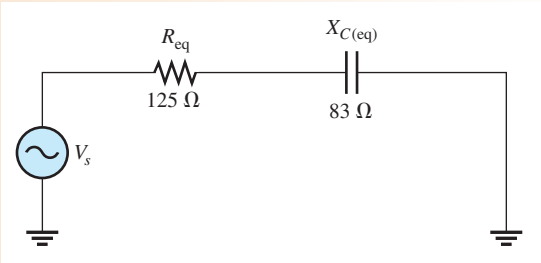

Related Problem The impedance of a parallel RC circuit is 10 kΩ and the phase angle is 26°. Convert to an equivalent series circuit.

Note that a parallel RC circuit becomes less reactive when X_C is increased. That is, the circuit phase angle becomes smaller. The reason for this effect is that when X_C is increased relative to R, less current is through the capacitive branch, and although the in-phase or resistive current does not increase, it becomes a greater percentage of the total current.

SECTION 5 CHECKUP

1. The admittance of a parallel RC circuit is 3.5 mS, and the source voltage is 6 V. What is the total current?
2. In a certain parallel RC circuit, the resistor current is 10 mA, and the capacitor current is 15 mA. Determine the phase angle and the total current.
3. What is the phase angle between the capacitor current and the source voltage in a parallel RC circuit?

6 ANALYSIS OF SERIES-PARALLEL *RC* CIRCUITS

The concepts studied in the previous sections are used to analyze circuits with combinations of both series and parallel R and C components.

After completing this section, you should be able to

- **Analyze series-parallel *RC* circuits**
  - Determine total impedance
  - Calculate currents and voltages
  - Measure impedance and phase angle

As in the case of dc circuits, combinational ac circuits can be solved by combining series or parallel elements into equivalent circuits. The following example demonstrates the analysis of a series-parallel reactive circuit.

www.EngineeringBooksPdf.com

EXAMPLE 14

In the series-parallel *RC* circuit of Figure 36, determine the following:

(a) total impedance **(b)** total current **(c)** phase angle by which I_{tot} leads V_s

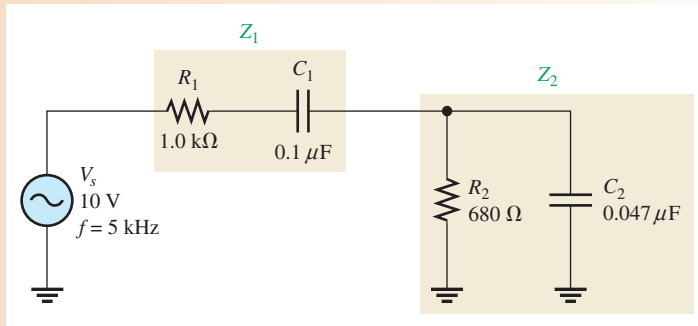

▲ FIGURE 36

Solution **(a)** First, calculate the magnitudes of the capacitive reactances.

$$X_{C1} = \frac{1}{2\pi(5\text{ kHz})(0.1\ \mu\text{F})} = 318\ \Omega$$

$$X_{C2} = \frac{1}{2\pi(5\text{ kHz})(0.047\ \mu\text{F})} = 677\ \Omega$$

One approach is to find the series equivalent resistance and capacitive reactance for the parallel portion of the circuit; then add the resistances ($R_1 + R_{eq}$) to get total resistance and add the reactances ($X_{C1} + X_{C(eq)}$) to get total reactance. From these totals, you can determine the total impedance.

Find the impedance of the parallel portion (Z_2) by first finding the admittance.

$$G_2 = \frac{1}{R_2} = \frac{1}{680\ \Omega} = 1.47\text{ mS}$$

$$B_{C2} = \frac{1}{X_{C2}} = \frac{1}{677\ \Omega} = 1.48\text{ mS}$$

$$Y_2 = \sqrt{G_2^2 + B_{C2}^2} = \sqrt{(1.47\text{ mS})^2 + (1.48\text{ mS})^2} = 2.09\text{ mS}$$

$$Z_2 = \frac{1}{Y_2} = \frac{1}{2.09\text{ mS}} = 478\ \Omega$$

The phase angle associated with the parallel portion of the circuit is

$$\theta_p = \tan^{-1}\left(\frac{R_2}{X_{C2}}\right) = \tan^{-1}\left(\frac{680\ \Omega}{677\ \Omega}\right) = 45.1°$$

The series equivalent values for the parallel portion are

$$R_{eq} = Z_2\cos\theta_p = (478\ \Omega)\cos(45.1°) = 337\ \Omega$$

$$X_{C(eq)} = Z_2\sin\theta_p = (478\ \Omega)\sin(45.1°) = 339\ \Omega$$

The total circuit resistance is

$$R_{tot} = R_1 + R_{eq} = 1000\ \Omega + 337\ \Omega = 1.34\text{ k}\Omega$$

The total circuit reactance is

$$X_{C(tot)} = X_{C1} + X_{C(eq)} = 318\ \Omega + 339\ \Omega = 657\ \Omega$$

www.EngineeringBooksPdf.com

The total circuit impedance is

$$Z_{tot} = \sqrt{R_{tot}^2 + X_{C(tot)}^2} = \sqrt{(1.34\text{ k}\Omega)^2 + (657\ \Omega)^2} = \mathbf{1.49\ k\Omega}$$

(b) Use Ohm's law to find the total current.

$$I_{tot} = \frac{V_s}{Z_{tot}} = \frac{10\text{ V}}{1.49\text{ k}\Omega} = \mathbf{6.71\ mA}$$

(c) To find the phase angle, view the circuit as a series combination of R_{tot} and $X_{C(tot)}$. The phase angle by which I_{tot} leads V_s is

$$\theta = \tan^{-1}\left(\frac{X_{C(tot)}}{R_{tot}}\right) = \tan^{-1}\left(\frac{657\ \Omega}{1.34\text{ k}\Omega}\right) = \mathbf{26.1°}$$

Related Problem Determine the voltages across Z_1 and Z_2 in Figure 36.

Open Multisim file E10-14. Verify the calculated value of the total current. Measure the current through R_2 and the current through C_2. Measure voltages across Z_1 and Z_2.

Circuit Measurements

Determining Z_{tot} Now, let's see how the value of Z_{tot} for the circuit in Example 14 can be determined by measurement. First, the total impedance is measured as outlined in the following steps and as illustrated in Figure 37 (other ways are also possible).

Step 1: Using a sine wave generator, set the source voltage to a known value (10 V) and the frequency to 5 kHz. Check the voltage with an ac voltmeter and the frequency with a frequency counter or an oscilloscope rather than relying on the marked values on the generator controls.

Step 2: Connect an ac ammeter as shown in Figure 37, and measure the total current. Alternately, you can measure the voltage across R_1 and calculate the current.

Step 3: Calculate the total impedance by using Ohm's law.

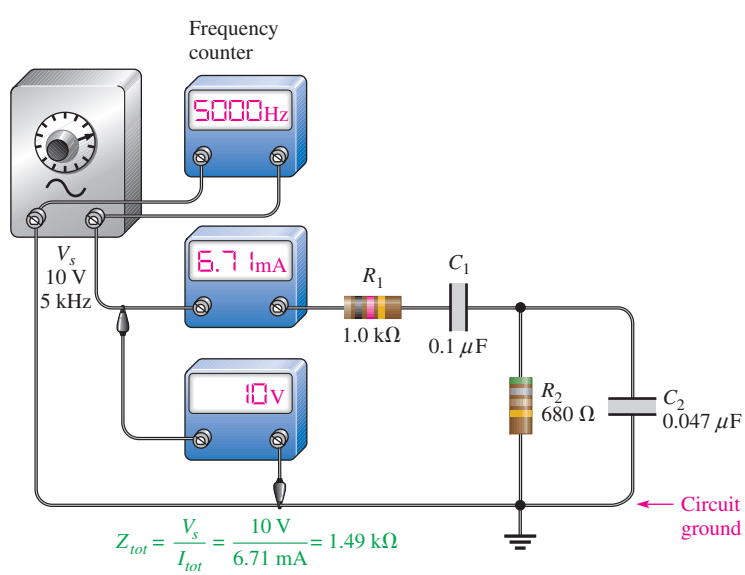

▲ **FIGURE 37**

Determining Z_{tot} by measurement of V_s and I_{tot}.

www.EngineeringBooksPdf.com

Determining θ To measure the phase angle, the source voltage and the total current must be displayed on an oscilloscope screen in the proper time relationship. Two basic types of scope probes are available to measure the quantities with an oscilloscope: the voltage probe and the current probe. The current probe is a convenient device, but it is often not as readily available as a voltage probe. We will confine our phase measurement technique to the use of voltage probes in conjunction with the oscilloscope. Although there are special isolation methods, a typical oscilloscope voltage probe has two points that are connected to the circuit: the probe tip and the ground lead. Thus, all voltage measurements must be referenced to ground.

Since only voltage probes are to be used, the total current cannot be measured directly. However, for phase measurement, the voltage across R_1 is in phase with the total current and can be used to establish the phase angle of the current.

Before proceeding with the actual phase measurement, there is a problem with displaying V_{R1}. If the scope probe is connected across the resistor, as indicated in Figure 38(a), the ground lead of the scope will short point B to ground, thus bypassing the rest of the components and effectively removing them from the circuit electrically, as illustrated in Figure 38(b) (assuming that the scope is not isolated from power line ground).

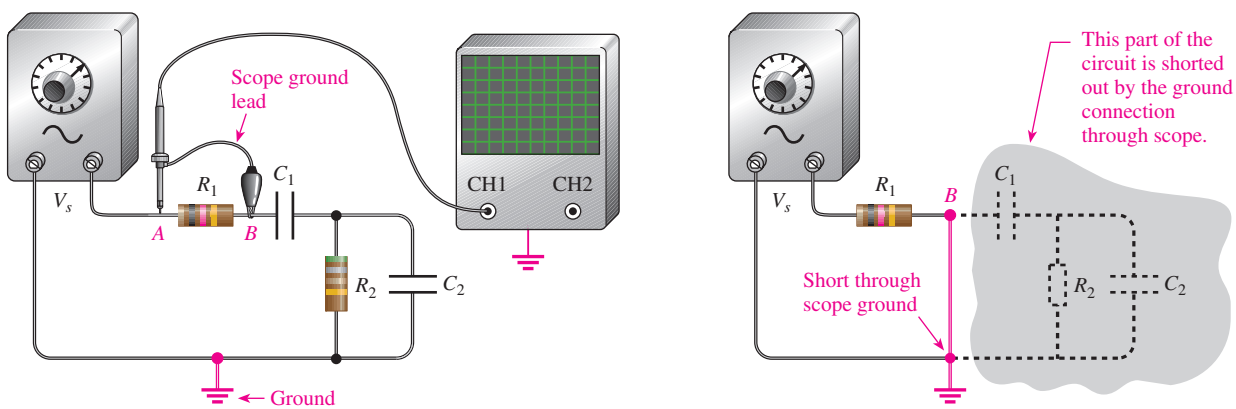

(a) Ground lead on scope probe grounds point B.

(b) The effect of grounding point B is to short out the rest of the circuit.

▲ **FIGURE 38**

Effects of measuring directly across a component when the instrument and the circuit are grounded.

To avoid this problem, you can switch the generator output terminals so that one end of R_1 is connected to the ground terminal, as shown in Figure 39(a). Now the scope can be connected across it to display V_{R1}, as indicated in Figure 39(b). The other probe is connected across the voltage source to display V_s as indicated. Now channel 1 of the scope has V_{R1} as an input, and channel 2 has V_s. The scope should be triggered from the source voltage (channel 2 in this case).

Before connecting the probes to the circuit, you should align the two horizontal lines (traces) so that they appear as a single line across the center of the scope screen. To do so, ground the probe tips and adjust the vertical position knobs to move the traces toward the center line of the screen until they are superimposed. This procedure ensures that both waveforms have the same zero crossing so that an accurate phase measurement can be made.

Once you have stabilized the waveforms on the scope screen, you can measure the period of the source voltage. Next, use the Volts/Div controls to adjust the amplitudes of the waveforms until they both appear to have the same amplitude. Now, spread the waveforms horizontally by using the Sec/Div control to expand the distance between them. This horizontal distance represents the time between the two waveforms. The number of divisions between the

www.EngineeringBooksPdf.com

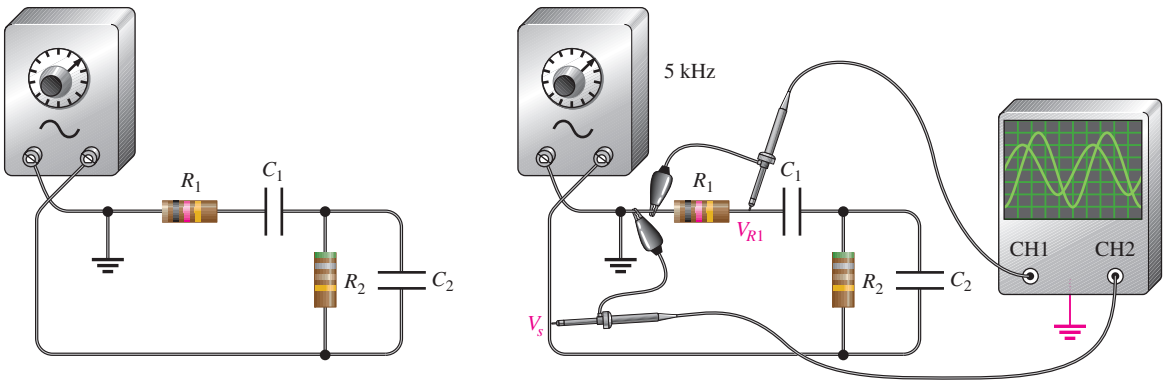

(a) Ground repositioned so that one end of R_1 is grounded.

(b) The scope displays V_{R1} and V_s. V_{R1} represents the phase of the total current.

▲ **FIGURE 39**

Repositioning ground so that a direct voltage measurement can be made with respect to ground without shorting out part of the circuit.

waveforms along any horizontal lines times the Sec/Div setting is equal to the time between them, Δt. Also, you can use the cursors to determine Δt if your oscilloscope has this feature.

Once you have determined the period, T, and the time between the waveforms, Δt, you can calculate the phase angle with the following equation:

Equation 25

$$\theta = \left(\frac{\Delta t}{T}\right)360^\circ$$

Figure 40 shows simulated screen displays for an oscilloscope in Multisim. In Figure 40(a), the waveforms are aligned and set to the same apparent amplitude by adjusting the fine Volts/Div control. The period of these waveforms is 200 μs. The Sec/Div control is adjusted to spread the waveforms out to read Δt more accurately. As shown in part (b), there are 3.0 divisions between the crossings on the center line. The Sec/Div control is set to 5.0 μs and there are 3.0 divisions between the waveforms.

$$\Delta t = 3.0 \text{ divisions} \times 5.0\ \mu\text{s/division} = 15\ \mu\text{s}$$

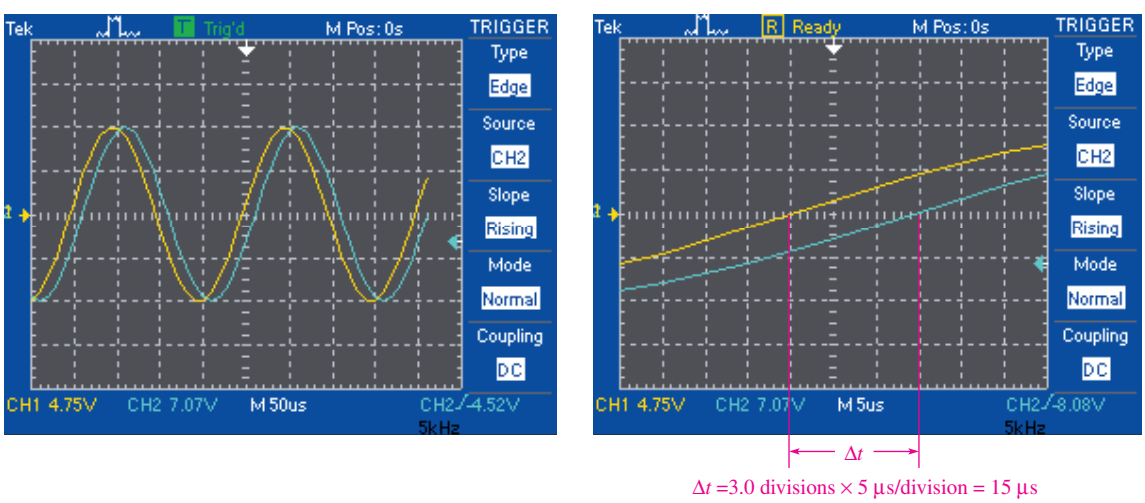

(a) (b)

▲ **FIGURE 40**

Determining the phase angle using an oscilloscope.

www.EngineeringBooksPdf.com

The phase angle is

$$\theta = \left(\frac{\Delta t}{T}\right)360° = \left(\frac{15\ \mu s}{200\ \mu s}\right)360° = 27°$$

SECTION 6 CHECKUP

1. Determine the series equivalent circuit for the series-parallel circuit in Figure 36.
2. What is the voltage across R_1 in Figure 36?

7 POWER IN *RC* CIRCUITS

In a purely resistive ac circuit, all of the energy delivered by the source is dissipated in the form of heat by the resistance. In a purely capacitive ac circuit, all of the energy delivered by the source is stored by the capacitor during a portion of the voltage cycle and then returned to the source during another portion of the cycle so that there is no net energy conversion to heat. When there is both resistance and capacitance, some of the energy is alternately stored and returned by the capacitance and some is dissipated by the resistance. The amount of energy converted to heat is determined by the relative values of the resistance and the capacitive reactance.

After completing this section, you should be able to

- **Determine power in *RC* circuits**
  - Explain true and reactive power
  - Draw the power triangle
  - Define *power factor*
  - Explain apparent power
  - Calculate power in an *RC* circuit

When the resistance is greater than the capacitive reactance in a series *RC* circuit, more of the total energy delivered by the source is dissipated by the resistor than is stored by the capacitor. Likewise, when the reactance is greater than the resistance, more of the total energy is stored and returned than is converted to heat.

The formulas for the power dissipated in a resistor, sometimes called *true power* (P_{true}), and the power in a capacitor, called *reactive power* (P_r), are restated here. The unit of true power is the watt (W), and the unit of reactive power is the VAR (volt-ampere reactive).

$$P_{true} = I_{tot}^2 R \qquad \text{Equation 26}$$

$$P_r = I_{tot}^2 X_C \qquad \text{Equation 27}$$

Power Triangle for *RC* Circuits

The generalized impedance phasor diagram for a series *RC* circuit is shown in Figure 41(a). A relationship for power can also be represented by a similar diagram because the respective magnitudes of the powers, P_{true} and P_r, differ from R and X_C by a factor of I_{tot}^2, as shown in Figure 41(b).

The resultant power, $I_{tot}^2 Z$, represents the **apparent power**, P_a. At any instant in time, P_a is the total power that appears to be transferred between the source and the *RC* circuit.

www.EngineeringBooksPdf.com

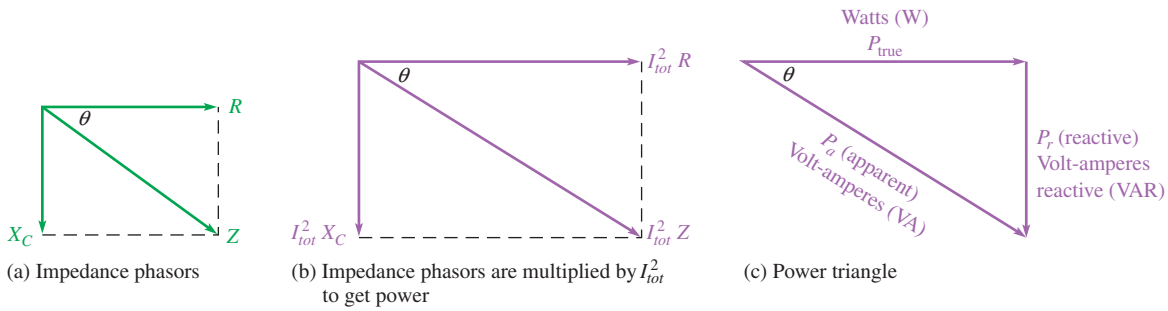

(a) Impedance phasors

(b) Impedance phasors are multiplied by I_{tot}^2 to get power

(c) Power triangle

▲ **FIGURE 41**

Development of the power triangle for a series *RC* circuit.

Part of the apparent power is true power, and part of it is reactive power. The unit of apparent power is the volt-ampere (VA). The expression for apparent power is

Equation 28

$$P_a = I_{tot}^2 Z$$

The diagram in Figure 41(b) can be rearranged in the form of a right triangle as shown in Figure 41(c), which is called the *power triangle.* Using the rules of trigonometry, P_{true} can be expressed as

$$P_{true} = P_a \cos\theta$$

Since P_a equals $I_{tot}^2 Z$ or $V_s I_{tot}$, the equation for true power can be written as

Equation 29

$$P_{true} = V_s I_{tot} \cos\theta$$

where V_s is the source voltage and I_{tot} is the total current.

For the case of a purely resistive circuit, $\theta = 0°$ and $\cos 0° = 1$, so P_{true} equals $V_s I_{tot}$. For the case of a purely capacitive circuit, $\theta = 90°$ and $\cos 90° = 0$, so P_{true} is zero. As you already know, there is no power dissipated in an ideal capacitor.

Power Factor

The term $\cos\theta$ is called the **power factor** and is stated as

Equation 30

$$PF = \cos\theta$$

As the phase angle between the source voltage and the total current increases, the power factor decreases, indicating an increasingly reactive circuit. The smaller the power factor, the smaller the power dissipation.

The power factor can vary from 0 for a purely reactive circuit to 1 for a purely resistive circuit. In an *RC* circuit, the power factor is referred to as a leading power factor because the current leads the voltage.

EXAMPLE 15

Determine the power factor and the true power in the *RC* circuit of Figure 42.

▶ **FIGURE 42**

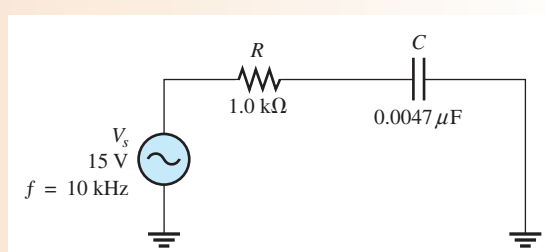

www.EngineeringBooksPdf.com

Solution Calculate the capacitive reactance and phase angle.

$$X_C = \frac{1}{2\pi fC} = \frac{1}{2\pi(10\text{ kHz})(0.0047\ \mu\text{F})} = 3.39\text{ k}\Omega$$

$$\theta = \tan^{-1}\left(\frac{X_C}{R}\right) = \tan^{-1}\left(\frac{3.39\text{ k}\Omega}{1.0\text{ k}\Omega}\right) = 73.6°$$

The power factor is

$$PF = \cos\theta = \cos(73.6°) = \mathbf{0.282}$$

The impedance is

$$Z = \sqrt{R^2 + X_C^2} = \sqrt{(1.0\text{ k}\Omega)^2 + (3.39\text{ k}\Omega)^2} = 3.53\text{ k}\Omega$$

Therefore, the current is

$$I = \frac{V_s}{Z} = \frac{15\text{ V}}{3.53\text{ k}\Omega} = 4.25\text{ mA}$$

The true power is

$$P_{\text{true}} = V_s I\cos\theta = (15\text{ V})(4.25\text{ mA})(0.282) = \mathbf{18.0\ mW}$$

Related Problem What is the power factor if f is reduced by half in Figure 42?

Open Multisim file E10-15. Measure the current and compare to the calculated value. Measure the voltages across R and C at 10 kHz, 5 kHz, and 20 kHz. Explain your observations.

Significance of Apparent Power

Apparent power is the power that *appears* to be transferred between the source and the load, and it consists of two components: a true power component and a reactive power component.

In all electrical and electronic systems, it is the true power that does the work. The reactive power is simply shuttled back and forth between the source and the load. Ideally, in terms of performing useful work, all of the power transferred to the load should be true power and none of it reactive power. However, in most practical situations the load has some reactance associated with it, and therefore you must deal with both power components.

For any reactive load, there are two components of the total current: the resistive component and the reactive component. If you consider only the true power (watts) in a load, you are dealing with only a portion of the total current that the load demands from a source. In order to have a realistic picture of the actual current that a load will draw, you must consider apparent power (in VA).

A source such as an ac generator can provide current to a load up to some maximum value. *If the load draws more than this maximum value, the source can be damaged.* Figure 43(a) shows a 120 V generator that can deliver a maximum current of 5 A to a load. Assume that the generator is rated at 600 W and is connected to a purely resistive load of 24 Ω (power factor of 1). The ammeter shows that the current is 5 A, and the wattmeter indicates that the power is 600 W. The generator has no problem under these conditions, although it is operating at maximum current and power.

Now, consider what happens if the load is changed to a reactive one with an impedance of 18 Ω and a power factor of 0.6, as indicated in Figure 43(b). The current is 120 V/18 Ω = 6.67 A, which exceeds the maximum. Even though the wattmeter reads 480 W, which is less than the power rating of the generator, the excessive current probably will cause damage. This example shows that a true power rating can be deceiving and is inappropriate for ac sources. This particular ac generator should be rated at 600 VA, a rating the manufacturer would use, rather than 600 W.

www.EngineeringBooksPdf.com

▶ **FIGURE 43**

The wattage rating of a source is inappropriate when the load is reactive. The rating should be in VA rather than in watts.

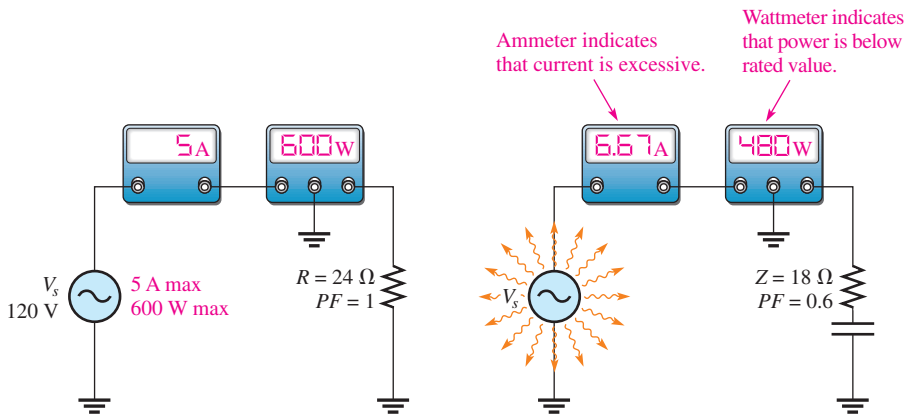

(a) Generator operating at its limits with a resistive load.

(b) Generator is in danger of internal damage due to excess current, even though the wattmeter indicates that the power is below the maximum wattage rating.

EXAMPLE 16

For the circuit in Figure 44, find the true power, the reactive power, and the apparent power. X_C has been determined to be 2.0 kΩ.

▶ **FIGURE 44**

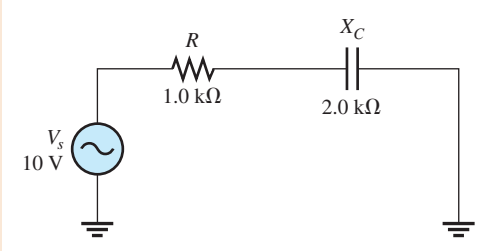

Solution First find the total impedance so that you can calculate the current.

$$Z_{tot} = \sqrt{R^2 + X_C^2} = \sqrt{(1.0\,\text{k}\Omega)^2 + (2.0\,\text{k}\Omega)^2} = 2.24\,\text{k}\Omega$$

$$I = \frac{V_s}{Z} = \frac{10\,\text{V}}{2.24\,\text{k}\Omega} = 4.46\,\text{mA}$$

The phase angle, θ, is

$$\theta = \tan^{-1}\left(\frac{X_C}{R}\right) = \tan^{-1}\left(\frac{2.0\,\text{k}\Omega}{1.0\,\text{k}\Omega}\right) = 63.4°$$

The true power is

$$P_{\text{true}} = V_s I \cos\theta = (10\,\text{V})(4.46\,\text{mA})\cos(63.4°) = \mathbf{20\,mW}$$

Note that the same result is realized if you use the formula $P_{\text{true}} = I^2R$.

The reactive power is

$$P_r = I^2X_C = (4.46\,\text{mA})^2(2.0\,\text{k}\Omega) = \mathbf{39.8\,mVAR}$$

The apparent power is

$$P_a = I^2Z = (4.46\,\text{mA})^2(2.24\,\text{k}\Omega) = \mathbf{44.6\,mVA}$$

The apparent power is also the phasor sum of P_{true} and P_r.

$$P_a = \sqrt{P_{\text{true}}^2 + P_r^2} = 44.6\,\text{mVA}$$

Related Problem What is the true power in Figure 44 if $X_C = 10\,\text{k}\Omega$?

www.EngineeringBooksPdf.com

SECTION 7 CHECKUP

1. To which component in an *RC* circuit is the power dissipation due?
2. If the phase angle, θ, is 45°, what is the power factor?
3. A certain series *RC* circuit has the following parameter values: $R = 330\,\Omega$, $X_C = 460\,\Omega$, and $I = 2\,A$. Determine the true power, the reactive power, and the apparent power.

8 BASIC APPLICATIONS

RC circuits are found in a variety of applications, often as part of a more complex circuit. Three applications are phase shift circuits applied to an oscillator, frequency-selective circuits (filters), and ac coupling.

After completing this section, you should be able to

- **Describe some basic *RC* applications**
  - Discuss how the *RC* circuit is used in an oscillator
  - Discuss how the *RC* circuit operates as a filter
  - Discuss ac coupling

The Phase Shift Oscillator

As you know, a series *RC* circuit will shift the phase of the output voltage by an amount that depends on the values of *R* and *C* and the frequency of the signal. This ability to shift phase depending on frequency is vital in certain feedback oscillator circuits. An **oscillator** is a circuit that generates a periodic waveform and is an important circuit for many electronic systems. You will study oscillators in a devices course, so the focus here is on the application of *RC* circuits for shifting phase. The requirement is that a fraction of the output of the oscillator is returned to the input (called *feedback*) in the proper phase to reinforce the input and sustain oscillations. Generally, the requirement is to feed back the signal with a total of 180° of phase shift.

A single *RC* circuit is limited to phase shifts that are smaller than 90°. The basic *RC* lag circuit discussed in Section 3 can be "stacked" to form a complex *RC* network, as shown in Figure 45, which shows a specific circuit called a *phase shift oscillator*.

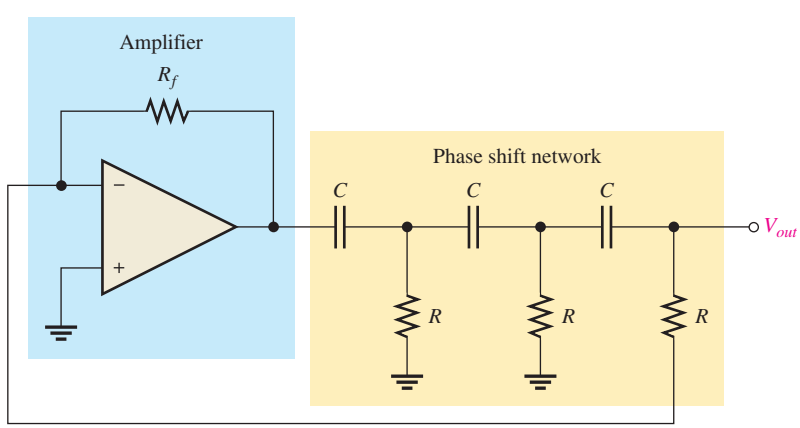

◀ FIGURE 45

Phase shift oscillator.

www.EngineeringBooksPdf.com

The phase shift oscillator typically uses three equal-component *RC* circuits that produce the required 180° phase shift at a certain frequency, which will be the frequency at which the oscillator works. The output of the amplifier is phase shifted by the *RC* network and returned to the input of the amplifier, which provides sufficient gain to maintain oscillations.

The process of putting several *RC* circuits together results in a loading effect, so the overall phase shift is not the same as simply adding the phase shifts of the individual *RC* circuits. The detailed calculation for this circuit involves a lot of tedious phasor math, but the result is simple. With equal components, the frequency at which a 180° phase shift occurs is given by the following equation:

$$f_r = \frac{1}{2\pi\sqrt{6}RC}$$

It also turns out that the *RC* network attenuates (reduces) the signal from the amplifier by a factor of 29; the amplifier must make up for this attenuation by having a gain of −29 (the minus sign takes into account the phase shift).

EXAMPLE 17

In Figure 46, calculate the output frequency.

▶ **FIGURE 46**

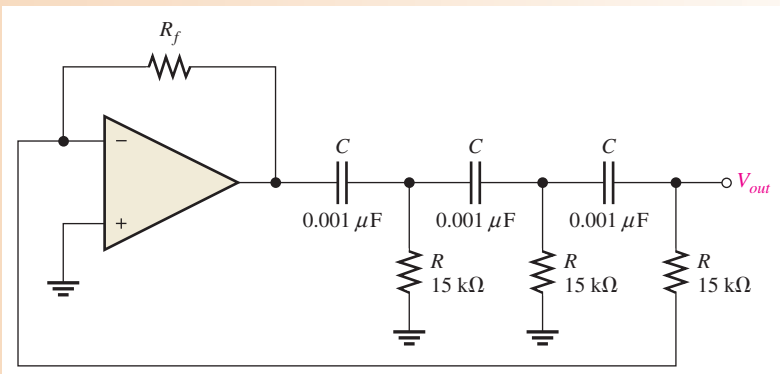

Solution

$$f_r = \frac{1}{2\pi\sqrt{6}RC} = \frac{1}{2\pi\sqrt{6}(15\text{ k}\Omega)(0.001\ \mu\text{F})} = 4.33\text{ kHz}$$

Related Problem If all of the capacitors are changed to 0.0027 μF, what is the oscillator frequency?

The *RC* Circuit as a Filter

Frequency-selective circuits (filters) permit signals of certain frequencies to pass from the input to the output while blocking all others. That is, ideally all frequencies but the selected ones are filtered out.

Series *RC* circuits exhibit a frequency-selective characteristic. There are two types. The first one that we examine is a **low-pass circuit** that is realized by taking the output across the capacitor, just as in a lag circuit. The second type is a **high-pass circuit**, which is implemented by taking the output across the resistor, as in a lead circuit. In practice, *RC* circuits are used in conjunction with operational amplifiers to create active filters, which are much more effective than passive *RC* circuits.

Low-Pass Filter You have seen what happens to the phase angle and the output voltage in a series *RC* lag circuit. In terms of the filtering action of the series *RC* circuit, the variation in the magnitude of the output voltage as a function of frequency is important.

www.EngineeringBooksPdf.com

Figure 47 shows the filtering action of a series *RC* circuit using a specific series of measurements in which the frequency starts at 100 Hz and is increased in increments up to 20 kHz. At each value of frequency, the output voltage is measured. As you can see, the capacitive reactance decreases as frequency increases, thus dropping less voltage across the capacitor while the input voltage is held at a constant 10 V throughout each step. Table 1 summarizes the variation of the circuit parameters with frequency.

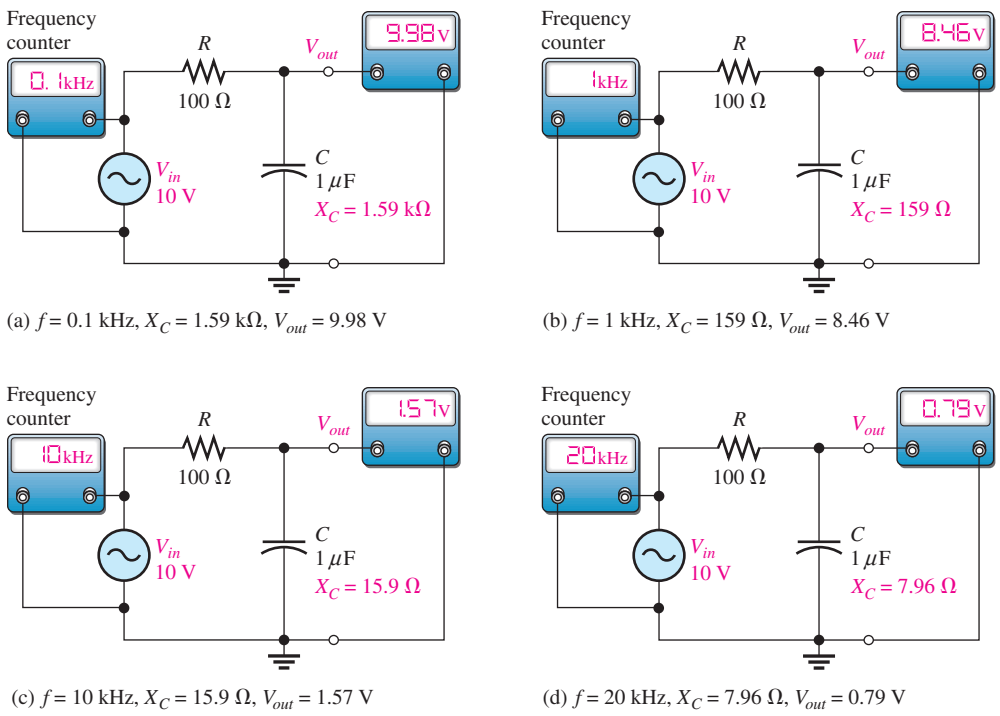

(a) $f = 0.1$ kHz, $X_C = 1.59$ kΩ, $V_{out} = 9.98$ V

(b) $f = 1$ kHz, $X_C = 159$ Ω, $V_{out} = 8.46$ V

(c) $f = 10$ kHz, $X_C = 15.9$ Ω, $V_{out} = 1.57$ V

(d) $f = 20$ kHz, $X_C = 7.96$ Ω, $V_{out} = 0.79$ V

▲ **FIGURE 47**

Example of low-pass filtering action. As frequency increases, V_{out} decreases.

◀ **TABLE 1**

f (kHz)	X_C (Ω)	Z_{tot} (Ω)	I (mA)	V_{out} (V)
0.1	1,590	≈1,590	≈6.29	9.98
1	159	188	53.2	8.46
10	15.9	101	99.0	1.57
20	7.96	≈100	≈100	0.79

The **frequency response** of the low-pass *RC* circuit in Figure 47 is shown in Figure 48, where the measured values are plotted on a graph of V_{out} versus f, and a smooth curve is drawn connecting the points. This graph, called a *response curve,* shows that the output voltage is greater at the lower frequencies and decreases as the frequency increases. The frequency scale is logarithmic.

High-Pass Filter To illustrate *RC* high-pass filtering action, Figure 49 shows a series of specific measurements. The frequency starts at 10 Hz and is increased in increments up to 10 kHz. As you can see, the capacitive reactance decreases as the frequency increases, thus causing more of the total input voltage to be dropped across the resistor. Table 2 summarizes the variation of circuit parameters with frequency.

www.EngineeringBooksPdf.com

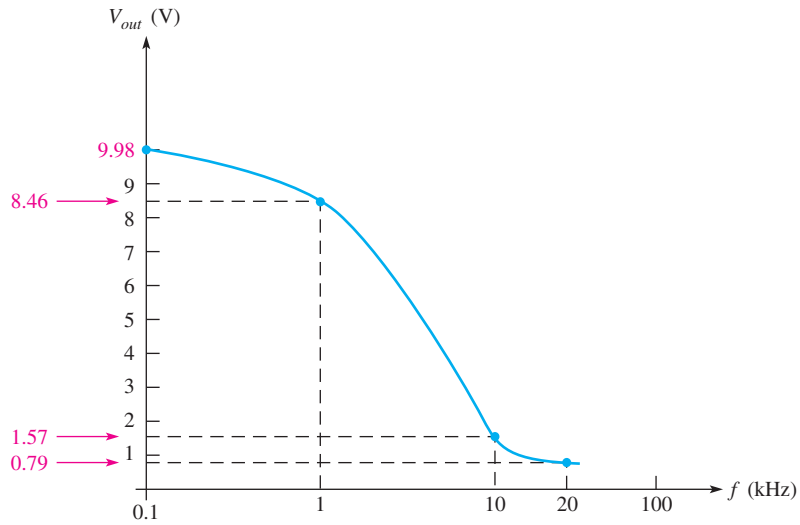

▲ **FIGURE 48**

Frequency response curve for the low-pass *RC* circuit in Figure 47.

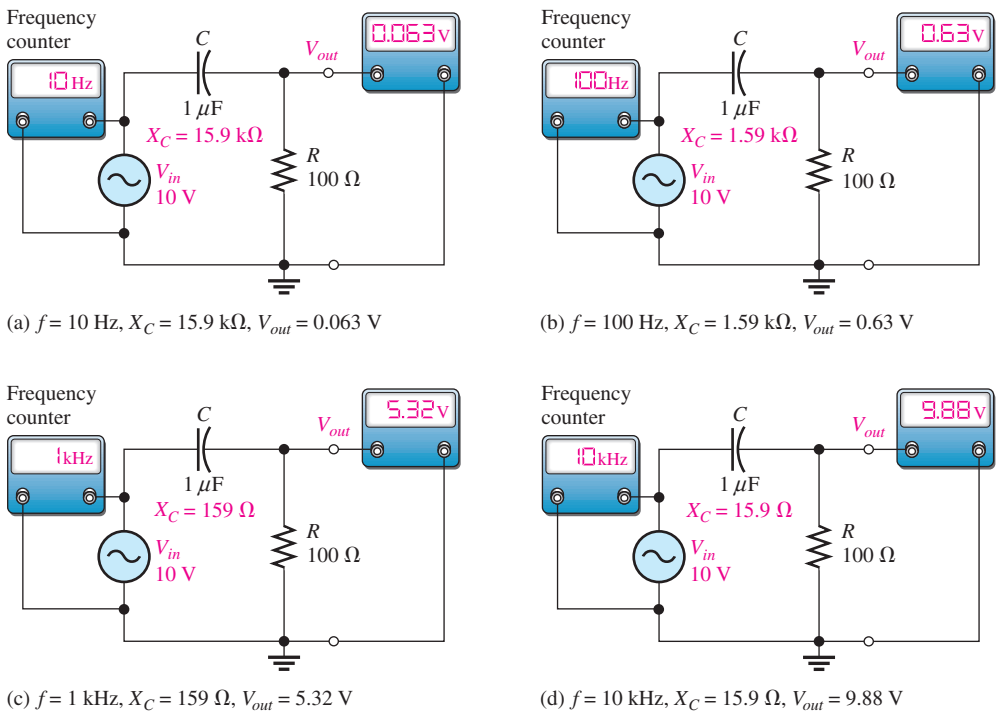

(a) f = 10 Hz, X_C = 15.9 kΩ, V_{out} = 0.063 V

(b) f = 100 Hz, X_C = 1.59 kΩ, V_{out} = 0.63 V

(c) f = 1 kHz, X_C = 159 Ω, V_{out} = 5.32 V

(d) f = 10 kHz, X_C = 15.9 Ω, V_{out} = 9.88 V

▲ **FIGURE 49**

Example of high-pass filtering action. As frequency increases, V_{out} increases.

▶ **TABLE 2**

f (kHz)	X_C (Ω)	Z_{tot} (Ω)	I (mA)	V_{out} (V)
.01	15,900	≈15,900	0.629	0.063
.1	1590	1593	6.28	0.63
1	159	188	53.2	5.32
10	15.9	101	98.8	9.88

www.EngineeringBooksPdf.com

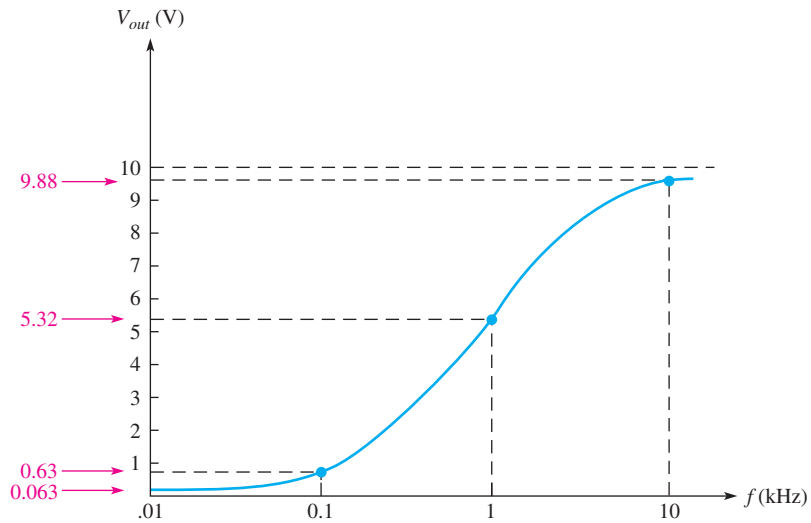

FIGURE 50

Frequency response curve for the high-pass *RC* circuit in Figure 49.

In Figure 50, the measured values for the high-pass *RC* circuit shown in Figure 49 have been plotted to produce a frequency response curve for this circuit. As you can see, the output voltage is greater at the higher frequencies and decreases as the frequency is reduced. The frequency scale is logarithmic.

The Cutoff Frequency and the Bandwidth of an RC Circuit The frequency at which the capacitive reactance equals the resistance in a low-pass or high-pass *RC* circuit is called the **cutoff frequency** and is designated f_c. This condition is expressed as $1/(2\pi f_c C) = R$. Solving for f_c results in the following formula:

$$f_c = \frac{1}{2\pi RC}$$

Equation 31

At f_c, the output voltage of the *RC* circuit is 70.7% of its maximum value. It is standard practice to consider the cutoff frequency as the limit of a circuit's performance in terms of passing or rejecting frequencies. For example, in a high-pass circuit, all frequencies above f_c are considered to be passed from the input to the output, and all those below f_c are considered to be rejected. The reverse is true for a low-pass circuit.

The range of frequencies that is considered to be passed from the input to the output of a circuit is called the **bandwidth**. Figure 51 illustrates the bandwidth and the cutoff frequency for a low-pass circuit.

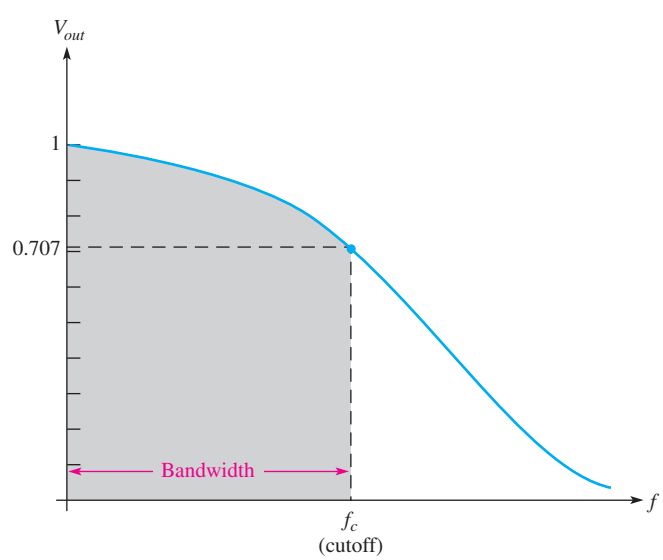

FIGURE 51

Normalized general response curve of a low-pass *RC* circuit showing the cutoff frequency and the bandwidth.

www.EngineeringBooksPdf.com

Coupling an AC Signal into a DC Bias Circuit

Figure 52 shows an *RC* circuit that is used to create a dc voltage level with an ac voltage superimposed on it. This type of circuit is commonly found in amplifiers in which the dc voltage is required to **bias** the amplifier to the proper operating point and the signal voltage to be amplified is coupled through a capacitor and superimposed on the dc level. The capacitor prevents the low internal resistance of the signal source from affecting the dc bias voltage.

▶ **FIGURE 52**

Amplifier bias and signal-coupling circuit.

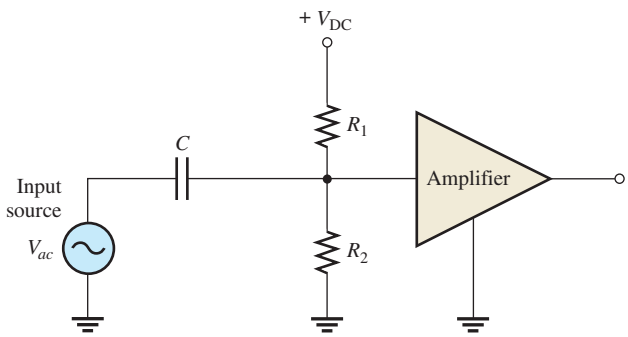

In this type of application, a relatively large value of capacitance is selected so that for the frequencies to be amplified, the reactance is very small compared to the resistance of the bias network. When the reactance is very small (ideally zero), there is practically no phase shift or signal voltage dropped across the capacitor. Therefore, all of the signal voltage passes from the source to the input to the amplifier.

Figure 53 illustrates the application of the superposition principle to the circuit in Figure 52. In part (a), the ac source has been effectively removed from the circuit and replaced with a short to represent its ideal internal resistance. Since *C* is open to dc, the voltage at point *A* is determined by the voltage-divider action of R_1 and R_2 and the dc voltage source.

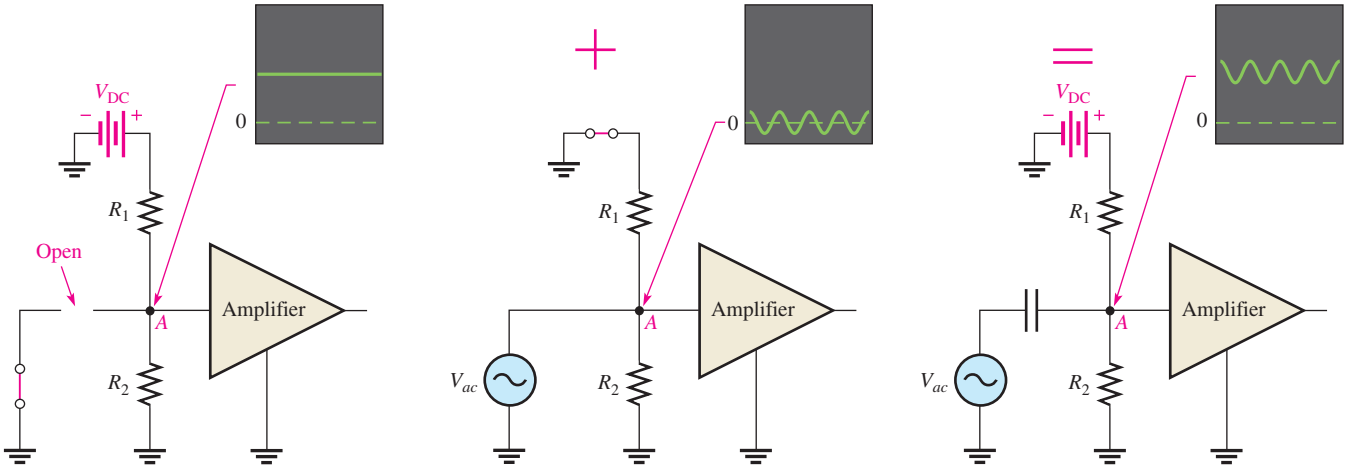

(a) dc equivalent: ac source replaced by short. *C* is open to dc. R_1 and R_2 act as dc voltage divider.

(b) ac equivalent: dc source is replaced by short. *C* is short to ac. All of V_{ac} is coupled to point *A*.

(c) dc + ac: Voltages are superimposed at point *A*.

▲ **FIGURE 53**

The superposition of dc and ac voltages in an *RC* bias and coupling circuit.

In Figure 53(b), the dc source has been effectively removed from the circuit and replaced with a short to represent its ideal internal resistance. Since *C* appears as a short at the frequency of the ac, the signal voltage is coupled directly to point *A* and appears across the

www.EngineeringBooksPdf.com

parallel combination of R_1 and R_2. Figure 53(c) illustrates that the combined effect of the superposition of the dc and the ac voltages results in the signal voltage "riding" on the dc level.

SECTION 8 CHECKUP

1. In a phase shift oscillator, the *RC* circuit must provide a total phase shift of how many degrees?
2. To achieve a low-pass characteristic with a series *RC* circuit, across which component is the output taken?

9 TROUBLESHOOTING

Typical component failures or degradation have an effect on the response of basic *RC* circuits. The APM (analysis, planning, and measurement) method of troubleshooting can be used to locate problems in a circuit.

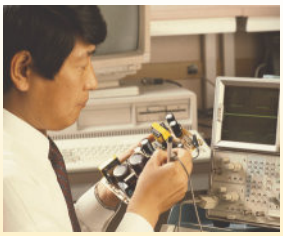

After completing this section, you should be able to

- **Troubleshoot *RC* circuits**
  - Find an open resistor
  - Find an open capacitor
  - Find a shorted capacitor
  - Find a leaky capacitor

Effect of an Open Resistor It is easy to see how an open resistor affects the operation of a basic series *RC* circuit, as shown in Figure 54. Obviously, there is no path for current, so the capacitor voltage remains at zero and the total voltage, V_s, appears across the open resistor.

Effect of an Open Capacitor When the capacitor is open, there is no current; thus, the resistor voltage drop is zero. The total source voltage appears across the open capacitor, as shown in Figure 55.

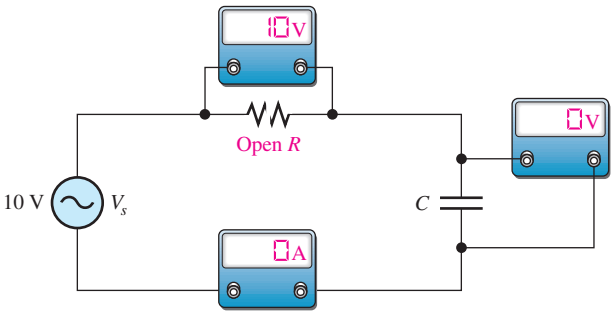

▲ FIGURE 54

Effect of an open resistor.

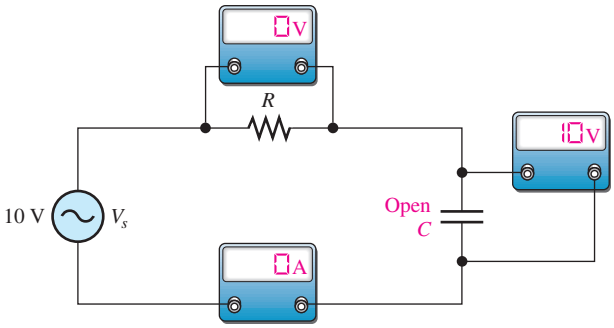

▲ FIGURE 55

Effect of an open capacitor.

Effect of a Shorted Capacitor When a capacitor shorts out, the voltage across it is zero, the current equals V_s/R, and the total voltage appears across the resistor, as shown in Figure 56.

www.EngineeringBooksPdf.com

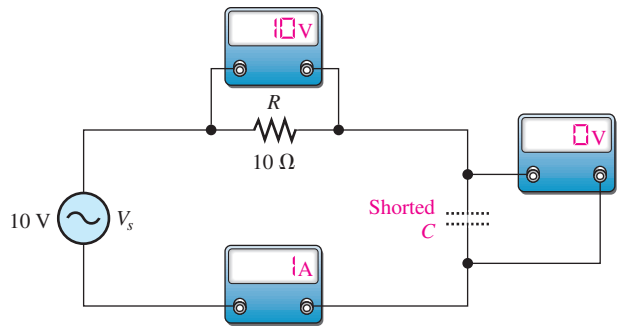

▲ FIGURE 56

Effect of a shorted capacitor.

HANDS ON TIP

Some multimeters have a relatively low frequency response of 1 kHz or less, while others can measure voltages or currents with frequencies up to about 2 MHz. Always check to make sure that your meter is capable of making accurate measurements at the particular frequency at which you are working.

Effect of a Leaky Capacitor When a capacitor exhibits a high leakage current, the leakage resistance effectively appears in parallel with the capacitor, as shown in Figure 57(a). When the leakage resistance is comparable in value to the circuit resistance, R, the circuit response is drastically affected. The circuit, looking from the capacitor toward the source, can be thevenized, as shown in Figure 57(b). The Thevenin equivalent resistance is R in parallel with R_{leak} (the source appears as a short), and the Thevenin equivalent voltage is determined by the voltage-divider action of R and R_{leak}.

$$R_{th} = R \| R_{leak} = \frac{RR_{leak}}{R + R_{leak}}$$

$$V_{th} = \left(\frac{R_{leak}}{R + R_{leak}}\right) V_{in}$$

As you can see, the voltage to which the capacitor will charge is reduced since $V_{th} < V_{in}$. Also, the current is increased. The Thevenin equivalent circuit is shown in Figure 57(c).

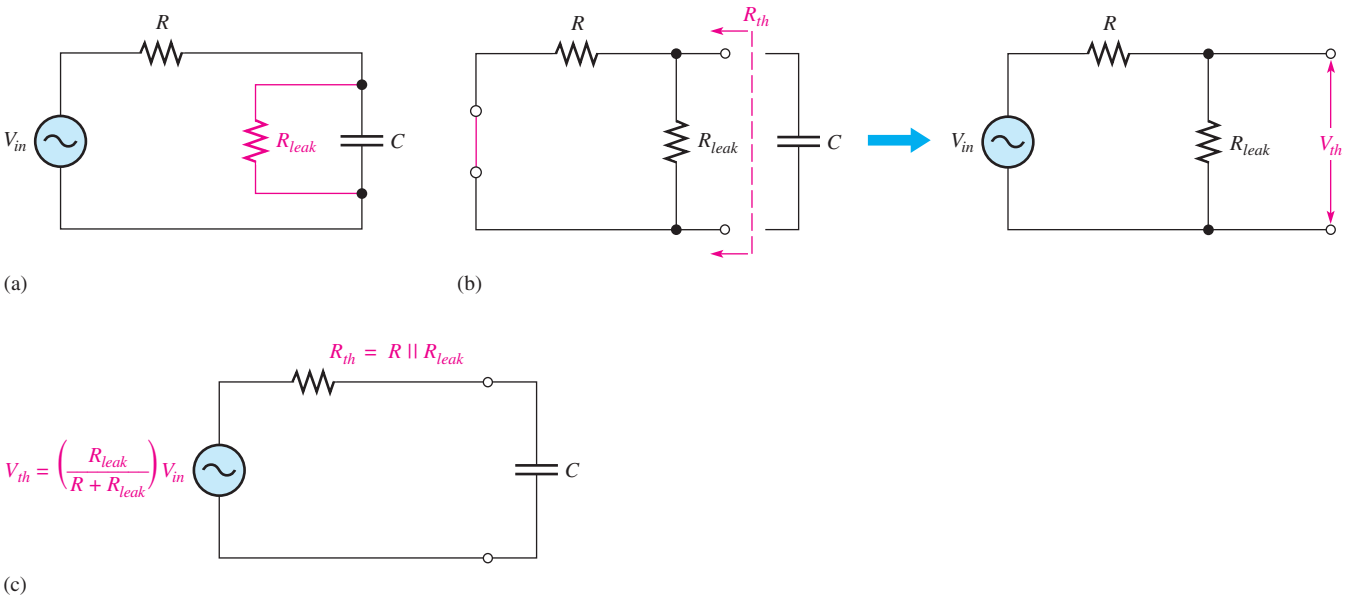

▲ FIGURE 57

Effect of a leaky capacitor.

www.EngineeringBooksPdf.com

EXAMPLE 18

Assume that the capacitor in Figure 58 is degraded to a point where its leakage resistance is 10 kΩ. Determine the phase shift from input to output and the output voltage under the degraded condition.

▶ FIGURE 58

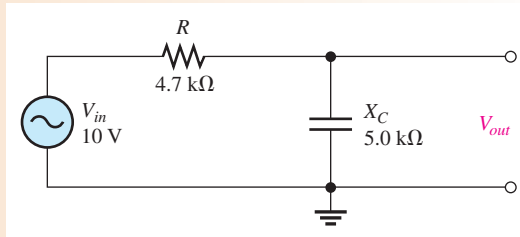

Solution The effective circuit resistance is

$$R_{th} = \frac{RR_{leak}}{R + R_{leak}} = \frac{(4.7\text{ k}\Omega)(10\text{ k}\Omega)}{14.7\text{ k}\Omega} = 3.2\text{ k}\Omega$$

The phase lag is

$$\phi = 90° - \tan^{-1}\left(\frac{X_C}{R_{th}}\right) = 90° - \tan^{-1}\left(\frac{5.0\text{ k}\Omega}{3.2\text{ k}\Omega}\right) = \mathbf{32.6°}$$

To determine the output voltage, first calculate the Thevenin equivalent voltage.

$$V_{th} = \left(\frac{R_{leak}}{R + R_{leak}}\right)V_{in} = \left(\frac{10\text{ k}\Omega}{14.7\text{ k}\Omega}\right)10\text{ V} = 6.80\text{ V}$$

$$V_{out} = \left(\frac{X_C}{\sqrt{R_{th}^2 + X_C^2}}\right)V_{th} = \left(\frac{5.0\text{ k}\Omega}{\sqrt{(3.2\text{ k}\Omega)^2 + (5.0\text{ k}\Omega)^2}}\right)6.8\text{ V} = \mathbf{5.73\text{ V}}$$

Related Problem What would the output voltage be if the capacitor were not leaky?

Other Troubleshooting Considerations

Many times, the failure of a circuit to work properly is not the result of a faulty component. A loose wire, a bad contact, or a poor solder joint can cause an open circuit. A short can be caused by a wire clipping or solder splash. Things as simple as not plugging in a power supply or a function generator happen more often than you might think. Wrong values in a circuit (such as an incorrect resistor value), the function generator set at the wrong frequency, or the wrong output connected to the circuit can cause improper operation.

When you have problems with a circuit, always check to make sure that the instruments are properly connected to the circuits and to a power outlet. Also, look for obvious things such as a broken or loose contact, a connector that is not completely plugged in, or a piece of wire or a solder bridge that could be shorting something out.

The point is that you should consider all possibilities, not just faulty components, when a circuit is not working properly. The following example illustrates this approach with a simple circuit using the APM (analysis, planning, and measurement) method.

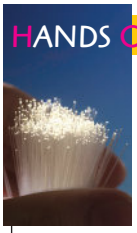

HANDS ON TIP

When connecting protoboard circuits, always consistently use standard colors for universal connections such as signals, power supply voltage, and ground. For example, you can use green wires for signals, red wires for power supply voltage, and black wires for ground connections. This helps you identify wiring during connecting and troubleshooting.

EXAMPLE 19

The circuit represented by the schematic in Figure 59 has no output voltage, which is the voltage across the capacitor. You expect to see about 7.4 V at the output. The circuit is physically constructed on a protoboard. Use your troubleshooting skills to find the problem.

www.EngineeringBooksPdf.com

▶ FIGURE 59

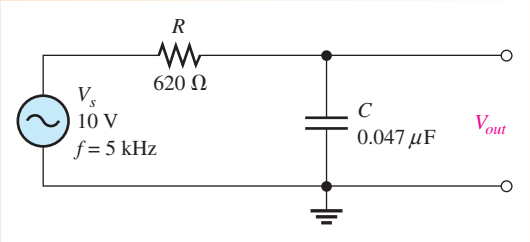

Solution Apply the APM method to this troubleshooting problem.

Analysis: First think of the possible causes for the circuit to have no output voltage.

1. There is no source voltage or the frequency is so high that the capacitive reactance is almost zero.
2. There is a short between the output terminals. Either the capacitor could be internally shorted, or there could be some physical short.
3. There is an open between the source and the output. This would prevent current and thus cause the output voltage to be zero. The resistor could be open, or the conductive path could be open due to a broken or loose connecting wire or a bad protoboard contact.
4. There is an incorrect component value. The resistor could be so large that the current and, therefore, the output voltage are negligible. The capacitor could be so large that its reactance at the input frequency is near zero.

Planning: You decide to make some visual checks for problems such as the function generator power cord not plugged in or the frequency set at an incorrect value. Also, broken leads, shorted leads, as well as an incorrect resistor color code or capacitor label often can be found visually. If nothing is discovered after a visual check, then you will make voltage measurements to track down the cause of the problem. You decide to use a digital oscilloscope and a DMM to make the measurements.

Measurement: Assume that you find that the function generator is plugged in and the frequency setting appears to be correct. Also, you find no visible opens or shorts during your visual check, and the component values are correct.

The first step in the measurement process is to check the voltage from the source with the scope. Assume a 10 V rms sine wave with a frequency of 5 kHz is observed at the circuit input as shown in Figure 60(a). The correct voltage is present, so *the first possible cause has been eliminated.*

Next, check for a shorted capacitor by disconnecting the source and placing a DMM (set on the ohmmeter function) across the capacitor. If the capacitor is good, an open will be indicated by an OL (overload) in the meter display after a short charging time. Assume the capacitor checks okay, as shown in Figure 60(b). *The second possible cause has been eliminated.*

Since the voltage has been "lost" somewhere between the input and the output, you must now look for the voltage. You reconnect the source and measure the voltage across the resistor with the DMM (set on the voltmeter function) from one resistor lead to the other. The voltage across the resistor is zero. This means there is no current, which indicates an open somewhere in the circuit.

Now, you begin tracing the circuit back toward the source looking for the voltage (you could also start from the source and work forward). You can use either the scope or the DMM, but decide to use the multimeter with one lead connected to ground and the other used to probe the circuit. As shown in Figure 60(c), the

www.EngineeringBooksPdf.com

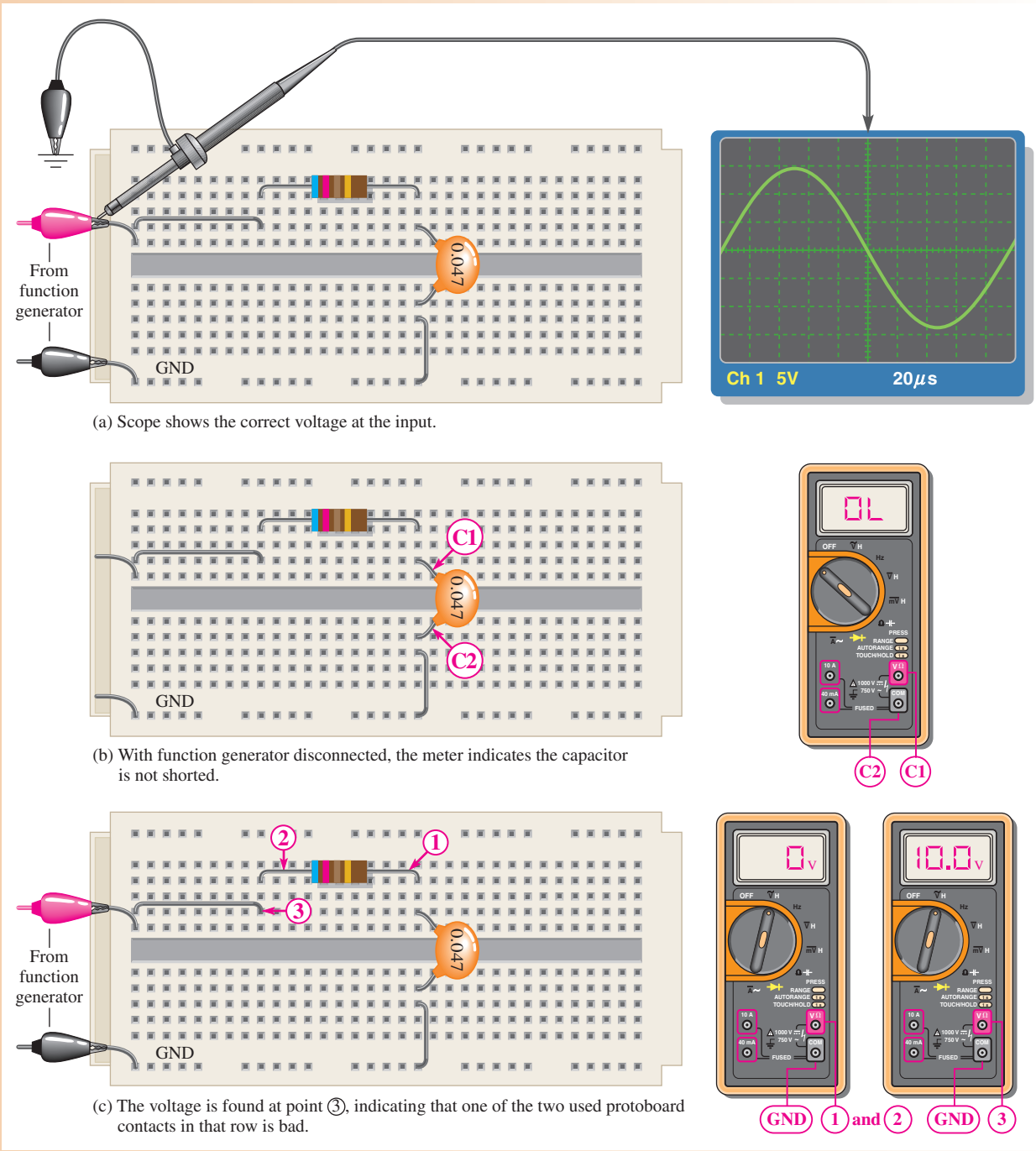

▲ FIGURE 60

voltage on the right lead of the resistor, point ①, reads zero. Since you already have measured zero voltage across the resistor, the voltage on the left resistor lead at point ② must be zero as the meter indicates. Next, moving the meter probe to point ③, you read 10 V. You have found the voltage! Since there is zero volts on the left resistor lead, and there is 10 V at point ③, one of the two contacts in the protoboard hole into which the wire leads are inserted is bad. It could be that the small contacts

www.EngineeringBooksPdf.com

were pushed in too far and were bent or broken so that the circuit lead does not make contact.

Move either or both the resistor lead and the wire to another hole in the same row. Assume that when the resistor lead is moved to the hole just above, you have voltage at the output of the circuit (across the capacitor).

Related Problem Suppose you had measured 10 V across the resistor before the capacitor was checked. What would this have indicated?

SECTION 9 CHECKUP

1. Describe the effect of a leaky capacitor on the dc response of an *RC* circuit.
2. In a series *RC* circuit, if all the applied voltage appears across the capacitor, what is the problem?
3. What faults can cause 0 V across the capacitor in a series *RC* circuit?

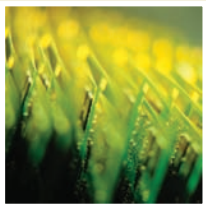

Application Assignment

PUTTING YOUR KNOWLEDGE TO WORK

In this assignment, you will check the voltage of an amplifier's input circuit to determine how it changes with the frequency of the input signal. If too much voltage is dropped across the capacitor, the overall performance of the amplifier is adversely affected. To do this assignment, you do not have to be familiar with the details of the amplifier circuit.

The coupling capacitor (C_1) in Figure 61 passes the input signal voltage to the input of the amplifier (point *A* to point *B*) without affecting the dc level at point *B* produced by the resistive voltage divider (R_1 and R_2). If the input frequency is high enough so that the reactance of the coupling capacitor is negligibly small, essentially no ac signal voltage is dropped across the capacitor. As the signal frequency is reduced, the capacitive reactance increases and more of the signal voltage is dropped across the capacitor. This lowers the output voltage of the amplifier.

The amount of signal voltage that is coupled from the input source (point *A*) to the amplifier input (point *B*) is determined by the values of the capacitor and the dc bias resistors (assuming the amplifier has no loading effect) in Figure 61. These components actually form a high-pass *RC* filter, as shown in Figure 62. The voltage-divider bias resistors are effectively in parallel with each other as far as the ac source is concerned. The lower end of R_2 goes to ground and the upper end of R_1 goes to the dc supply voltage as shown in Figure 62(a).

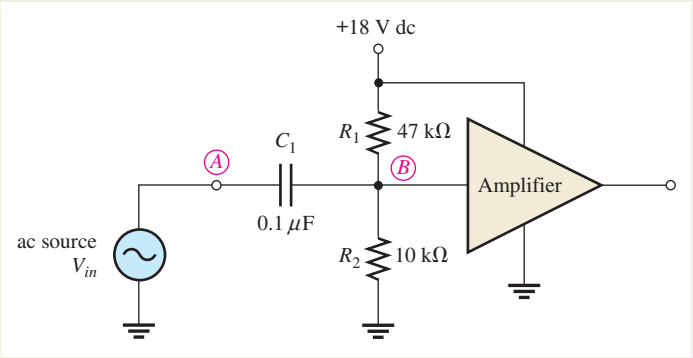

▲ **FIGURE 61**

A capacitively coupled amplifier.

www.EngineeringBooksPdf.com

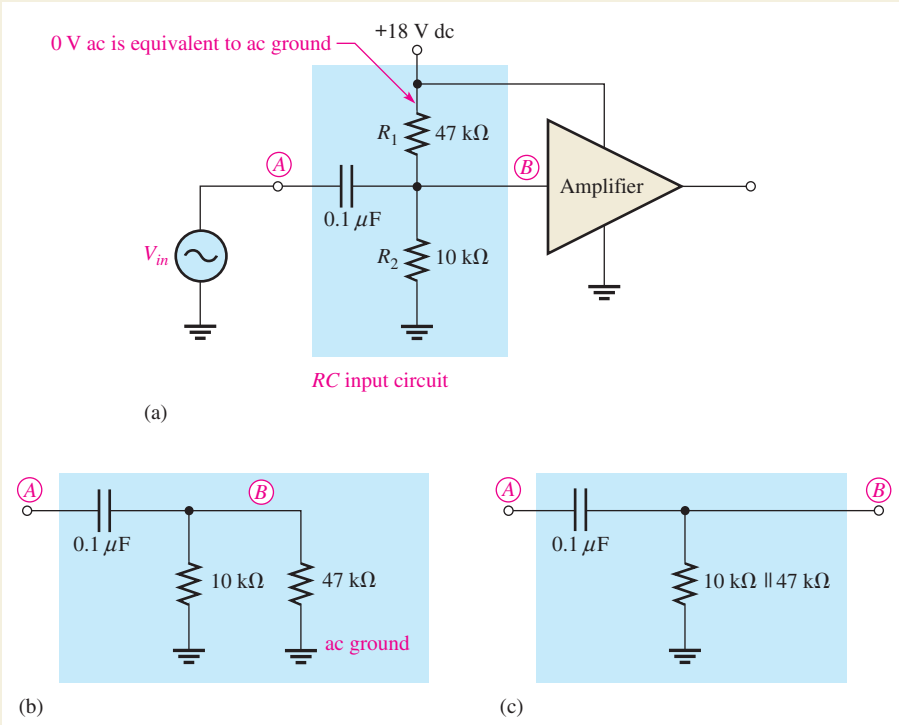

▲ **FIGURE 62**

The *RC* input circuit acts effectively like a high-pass *RC* filter.

Since there is no ac voltage at the +18 V dc terminal, the upper end of R_1 is at 0 V ac which is referred to as *ac ground*. The development of the circuit into an effective high-pass *RC* filter is shown in parts (b) and (c).

Step 1: Evaluating the Amplifier Input Circuit

Determine the value of the equivalent resistance of the input circuit. Assume the amplifier (shown inside the white dashed lines in Figure 63) has no loading effect on the input circuit.

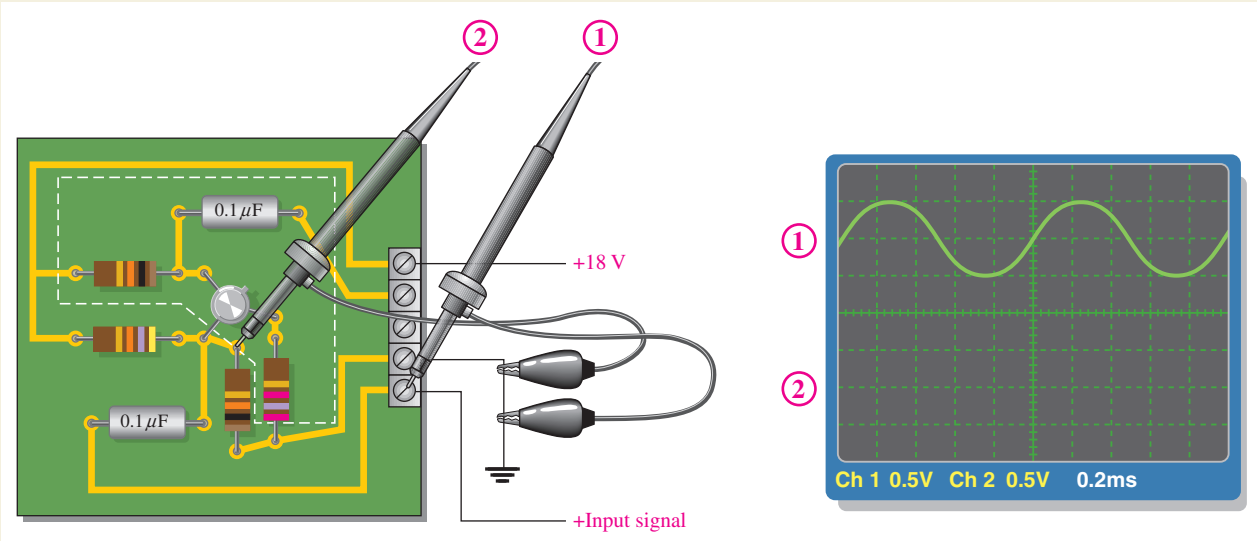

▲ **FIGURE 63**

Measuring the input circuit response at frequency f_1. The channel 1 waveform is shown.

www.EngineeringBooksPdf.com

Step 2: Measuring the Response at Frequency f_1

Refer to Figure 63. The input signal voltage is applied to the amplifier circuit board and displayed on channel 1 of the oscilloscope, and channel 2 is connected to a point on the circuit board. Determine to what point on the circuit the channel 2 probe is connected, the frequency, and the voltage that should be displayed.

Step 3: Measuring the Response at Frequency f_2

Refer to Figure 64 and the circuit board in Figure 63. The input signal voltage displayed on channel 1 of the oscilloscope is applied to the amplifier circuit board. Determine the frequency and the voltage that should be displayed on channel 2.

State the difference between the channel 2 waveforms determined in Step 2 and Step 3. Explain the reason for the difference.

Step 4: Measuring the Response at Frequency f_3

Refer to Figure 65 and the circuit board in Figure 63. The input signal voltage displayed on channel 1 of the oscilloscope is applied to the amplifier circuit board. Determine the frequency and the voltage that should be displayed on channel 2.

State the difference between the channel 2 waveforms determined in Step 3 and Step 4. Explain the reason for the difference.

Step 5: Plotting a Response Curve

Determine the frequency at which the signal voltage at point B in Figure 61 is 70.7% of its maximum value. Plot the response curve using this voltage value and the values at frequencies f_1, f_2, and f_3. How does this curve show that the input circuit acts as a high-pass filter? What can you do to the circuit to lower the frequency at which the voltage is 70.7% of maximum without affecting the dc bias voltage?

Multisim Analysis

Using Multisim, connect the equivalent circuit in Figure 62(b).

1. Apply an input signal voltage at the same frequency and amplitude as shown in Figure 63. Measure the voltage at point B with the oscilloscope and compare the result from Step 2.
2. Apply an input signal voltage at the same frequency and amplitude as shown in Figure 64. Measure the voltage at point B with the oscilloscope and compare the result from Step 3.
3. Apply an input signal voltage at the same frequency and amplitude as shown in Figure 65. Measure the voltage at point B with the oscilloscope and compare the result from Step 4.

Review

1. Explain the effect on the response of the amplifier input circuit of reducing the value of the coupling capacitor.
2. What is the voltage at point B in Figure 61 if the coupling capacitor opens when the ac input signal is 10 mV rms?
3. What is the voltage at point B in Figure 61 if resistor R_1 is open when the ac input signal is 10 mV rms?

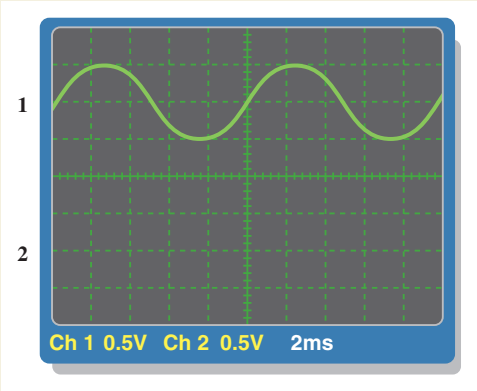

▲ FIGURE 64

Measuring the input circuit response at frequency f_2. The channel 1 waveform is shown.

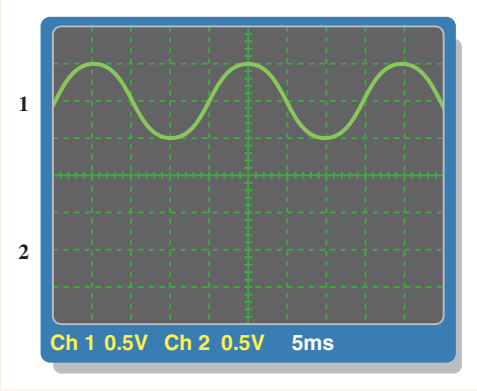

▲ FIGURE 65

Measuring the input circuit response at frequency f_3. The channel 1 waveform is shown.

SUMMARY

- When a sinusoidal voltage is applied to an RC circuit, the current and all the voltage drops are also sine waves.
- Total current in a series or parallel RC circuit always leads the source voltage.
- The resistor voltage is always in phase with the current.

www.EngineeringBooksPdf.com

- The capacitor voltage always lags the current by 90°.
- In an *RC* circuit, the impedance is determined by both the resistance and the capacitive reactance combined.
- Impedance is expressed in units of ohms.
- The circuit phase angle is the angle between the total current and the source voltage.
- The impedance of a series *RC* circuit varies inversely with frequency.
- The phase angle (θ) of a series *RC* circuit varies inversely with frequency.
- In an *RC* lag circuit, the output voltage lags the input voltage in phase.
- In an *RC* lead circuit, the output voltage leads the input voltage.
- For each parallel *RC* circuit, there is an equivalent series circuit for any given frequency.
- The impedance of a circuit can be determined by measuring the source voltage and the total current and then applying Ohm's law.
- In an *RC* circuit, part of the power is resistive and part reactive.
- The phasor combination of resistive power (true power) and reactive power is called *apparent power.*
- Apparent power is expressed in volt-amperes (VA).
- The power factor (*PF*) indicates how much of the apparent power is true power.
- A power factor of 1 indicates a purely resistive circuit, and a power factor of 0 indicates a purely reactive circuit.
- In a circuit that exhibits frequency selectivity, certain frequencies are passed to the output while others are rejected.

KEY TERMS

Admittance (*Y*) A measure of the ability of a reactive circuit to permit current; the reciprocal of impedance. The unit is the siemens (S).

Apparent power (P_a) The phasor combination of resistive power (true power) and reactive power. The unit is the volt-ampere (VA).

Bandwidth The range of frequencies that is considered to be passed from the input to the output of a circuit.

Capacitive susceptance (B_C) The ability of a capacitor to permit current: the reciprocal of capacitive reactance. The unit is the siemens (S).

Cutoff frequency The frequency at which the output voltage of a filter is 70.7% of the maximum output voltage.

Frequency response In electric circuits, the variation in the output voltage (or current) over a specified range of frequencies.

Impedance (*Z*) The total opposition to sinusoidal current expressed in ohms.

Phase angle The angle between the source voltage and the total current in a reactive circuit.

Power factor The relationship between volt-amperes and true power or watts. Volt-amperes multiplied by the power factor equals true power.

***RC* lag circuit** A phase shift circuit in which the output voltage, taken across the capacitor, lags the input voltage by a specified angle.

***RC* lead circuit** A phase shift circuit in which the output voltage, taken across the resistor, leads the input voltage by a specified angle.

FORMULAS

1	$Z = \sqrt{R^2 + X_C^2}$	Series *RC* impedance
2	$\theta = \tan^{-1}\left(\frac{X_C}{R}\right)$	Series *RC* phase angle
3	$V = IZ$	Ohm's law

www.EngineeringBooksPdf.com

4	$I = \frac{V}{Z}$	Ohm's law
5	$Z = \frac{V}{I}$	Ohm's law
6	$V_s = \sqrt{V_R^2 + V_C^2}$	Total voltage in series *RC* circuits
7	$\theta = \tan^{-1}\left(\frac{V_C}{V_R}\right)$	Series *RC* phase angle
8	$\phi = 90° - \tan^{-1}\left(\frac{X_C}{R}\right)$	Phase angle of lag circuit
9	$V_{out} = \left(\frac{X_C}{\sqrt{R^2 + X_C^2}}\right)V_{in}$	Output voltage of lag circuit
10	$\phi = \tan^{-1}\left(\frac{X_C}{R}\right)$	Phase angle of lead circuit
11	$V_{out} = \left(\frac{R}{\sqrt{R^2 + X_C^2}}\right)V_{in}$	Output voltage of lead circuit
12	$Z = \frac{RX_C}{\sqrt{R^2 + X_C^2}}$	Parallel *RC* impedance
13	$\theta = \tan^{-1}\left(\frac{R}{X_C}\right)$	Parallel *RC* phase angle
14	$G = \frac{1}{R}$	Conductance
15	$B_C = \frac{1}{X_C}$	Capacitive susceptance
16	$Y = \frac{1}{Z}$	Admittance
17	$Y_{tot} = \sqrt{G^2 + B_C^2}$	Total admittance
18	$V = \frac{I}{Y}$	Ohm's law
19	$I = VY$	Ohm's law
20	$Y = \frac{I}{V}$	Ohm's law
21	$I_{tot} = \sqrt{I_R^2 + I_C^2}$	Total current in parallel *RC* circuits
22	$\theta = \tan^{-1}\left(\frac{I_C}{I_R}\right)$	Parallel *RC* phase angle
23	$R_{eq} = Z\cos\theta$	Equivalent series resistance
24	$X_{C(eq)} = Z\sin\theta$	Equivalent series reactance
25	$\theta = \left(\frac{\Delta t}{T}\right)360°$	Phase angle using time measurements
26	$P_{true} = I_{tot}^2 R$	True power (W)
27	$P_r = I_{tot}^2 X_C$	Reactive power (VAR)
28	$P_a = I_{tot}^2 Z$	Apparent power (VA)
29	$P_{true} = V_s I_{tot}\cos\theta$	True power
30	$PF = \cos\theta$	Power factor
31	$f_c = \frac{1}{2\pi RC}$	Cutoff frequency of an *RC* circuit

www.EngineeringBooksPdf.com

TRUE/FALSE QUIZ

Answers are at the end of the chapter.

1. In a series *RC* circuit, the impedance increases when frequency increases.
2. In a series *RC* lag circuit, the output voltage is taken across the resistor.
3. Admittance is the reciprocal of susceptance.
4. In a parallel *RC* circuit, as frequency is increased, the conductance is unchanged.
5. The phase angle of an *RC* circuit is measured between the source voltage and current.
6. The impedance of a parallel *RC* circuit can be found by applying phasor arithmetic to the product-over-sum rule.
7. If $X_C = R$, the phase shift in a series *RC* circuit is 45° with current leading voltage.
8. The power factor is equal to the tangent of the phase angle.
9. A purely resistive circuit has a power factor of 0.
10. Apparent power is measured in watts.

SELF-TEST

Answers are at the end of the chapter.

1. In a series *RC* circuit, the voltage across the resistance is
   (a) in phase with the source voltage **(b)** lagging the source voltage by 90°
   (c) in phase with the current **(d)** lagging the current by 90°
2. In a series *RC* circuit, the voltage across the capacitor is
   (a) in phase with the source voltage **(b)** lagging the resistor voltage by 90°
   (c) in phase with the current **(d)** lagging the source voltage by 90°
3. When the frequency of the voltage applied to a series *RC* circuit is increased, the impedance
   (a) increases **(b)** decreases **(c)** remains the same **(d)** doubles
4. When the frequency of the voltage applied to a series *RC* circuit is decreased, the phase angle
   (a) increases **(b)** decreases **(c)** remains the same **(d)** becomes erratic
5. In a series *RC* circuit when the frequency and the resistance are doubled, the impedance
   (a) doubles **(b)** is halved
   (c) is quadrupled **(d)** cannot be determined without values
6. In a series *RC* circuit, 10 V rms is measured across the resistor and 10 V rms is also measured across the capacitor. The rms source voltage is
   (a) 20 V **(b)** 14.14 V **(c)** 28.28 V **(d)** 10 V
7. The voltages in Problem 6 are measured at a certain frequency. To make the resistor voltage greater than the capacitor voltage, the frequency
   (a) must be increased **(b)** must be decreased
   (c) is held constant **(d)** has no effect
8. When $R = X_C$, the phase angle is
   (a) 0° **(b)** +90° **(c)** −90° **(d)** 45°
9. To decrease the phase angle below 45°, the following condition must exist:
   (a) $R = X_C$ **(b)** $R < X_C$ **(c)** $R > X_C$ **(d)** $R = 10X_C$
10. When the frequency of the source voltage is increased, the impedance of a parallel *RC* circuit
    (a) increases **(b)** decreases **(c)** does not change
11. In a parallel *RC* circuit, there is 1 A rms through the resistive branch and 1 A rms through the capacitive branch. The total rms current is
    (a) 1 A **(b)** 2 A **(c)** 2.28 A **(d)** 1.414 A
12. A power factor of 1 indicates that the circuit phase angle is
    (a) 90° **(b)** 45° **(c)** 180° **(d)** 0°
13. For a certain load, the true power is 100 W and the reactive power is 100 VAR. The apparent power is
    (a) 200 VA **(b)** 100 VA **(c)** 141.4 VA **(d)** 141.4 W

www.EngineeringBooksPdf.com

14. Energy sources are normally rated in

(a) watts **(b)** volt-amperes **(c)** volt-amperes reactive **(d)** none of these

15. If the bandwidth of a certain low-pass filter is 1 kHz, the cutoff frequency is

(a) 0 Hz **(b)** 500 Hz **(c)** 2 kHz **(d)** 1000 Hz

TROUBLESHOOTING: SYMPTOM AND CAUSE

The purpose of these exercises is to help develop thought processes essential to troubleshooting. Answers are at the end of the chapter.

Determine the cause for each set of symptoms. Refer to Figure 66.

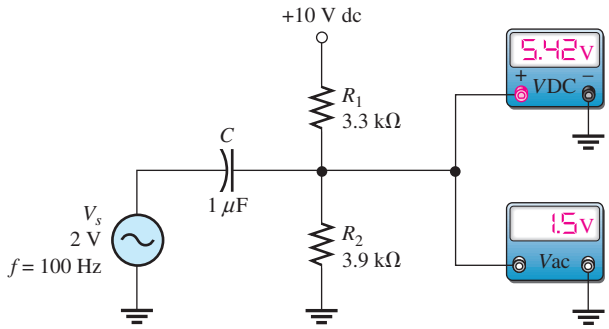

▲ **FIGURE 66**

The ac meters indicate the correct readings for this circuit.

1. *Symptom:* The dc voltmeter reading is 0 V, and the ac voltmeter reading is 1.85 V.
Cause:
(a) C is shorted.
(b) R_1 is open.
(c) R_2 is open.

2. *Symptom:* The dc voltmeter reading is 5.42 V, and the ac voltmeter reading is 0 V.
Cause:
(a) C is shorted.
(b) C is open.
(c) A resistor is open.

3. *Symptom:* The dc voltmeter reading is approximately 0 V, and the ac voltmeter reading is 2 V.
Cause:
(a) C is shorted.
(b) C is open.
(c) R_1 is shorted.

4. *Symptom:* The dc voltmeter reading is 10 V, and the ac voltmeter reading is 0 V.
Cause:
(a) C is open.
(b) C is shorted.
(c) R_1 is shorted.

5. *Symptom:* The dc voltmeter reading is 10 V, and the ac voltmeter reading is 1.8 V.
Cause:
(a) R_1 is shorted.
(b) R_2 is open.
(c) C is shorted.

www.EngineeringBooksPdf.com

PROBLEMS

Answers to odd-numbered problems are at the end of the chapter.

BASIC PROBLEMS

SECTION 1 Sinusoidal Response of Series *RC* Circuits

1. An 8 kHz sinusoidal voltage is applied to a series *RC* circuit. What is the frequency of the voltage across the resistor? Across the capacitor?
2. What is the waveshape of the current in the circuit of Problem 1?

SECTION 2 Impedance and Phase Angle of Series *RC* Circuits

3. Find the impedance of each circuit in Figure 67.

▶ FIGURE 67

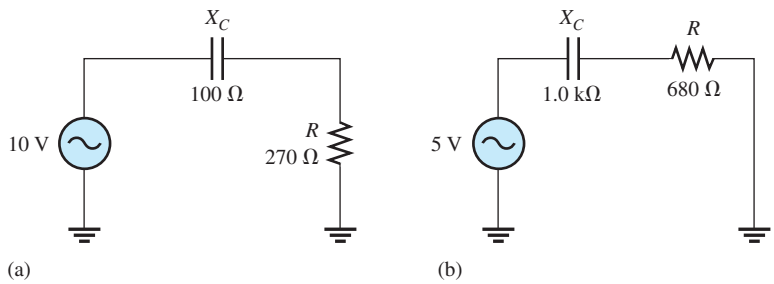

4. Determine the impedance and the phase angle in each circuit in Figure 68.

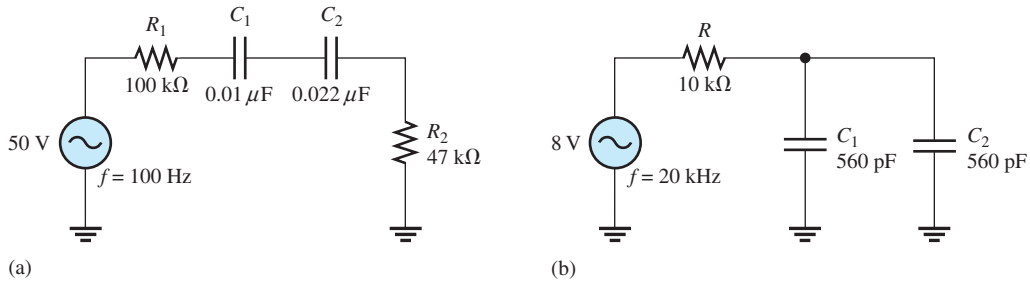

▲ FIGURE 68

5. For the circuit of Figure 69, determine the impedance for each of the following frequencies:
   (a) 100 Hz **(b)** 500 Hz **(c)** 1.0 kHz **(d)** 2.5 kHz

▶ FIGURE 69

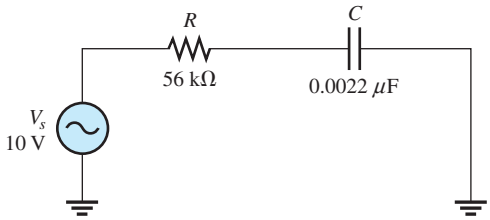

6. Repeat Problem 5 for $C = 0.0047\ \mu F$.

SECTION 3 Analysis of Series *RC* Circuits

7. Calculate the total current in each circuit of Figure 67.
8. Repeat Problem 7 for the circuits in Figure 68.
9. For the circuit in Figure 70, draw the phasor diagram showing all voltages and the total current. Indicate the phase angles.

www.EngineeringBooksPdf.com

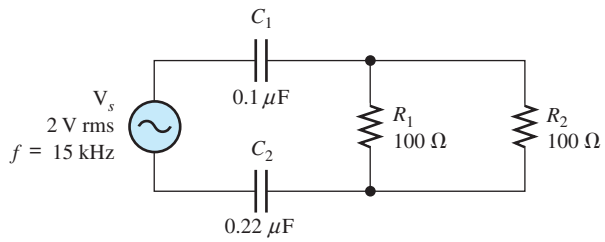

▲ FIGURE 70

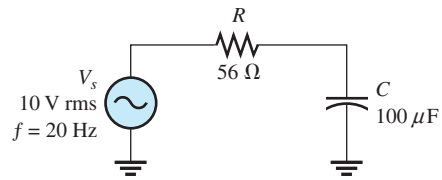

▲ FIGURE 71

10. For the circuit in Figure 71, determine the following:

(a) Z **(b)** I **(c)** V_R **(d)** V_C

11. To what value must the rheostat be set in Figure 72 to make the total current 10 mA? What is the resulting phase angle?

▶ FIGURE 72

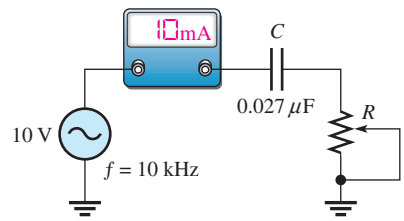

12. For the lag circuit in Figure 73, determine the phase lag between the input voltage and the output voltage for each of the following frequencies:

(a) 1 Hz **(b)** 100 Hz **(c)** 1.0 kHz **(d)** 10 kHz

13. Repeat Problem 12 for the lead circuit in Figure 74.

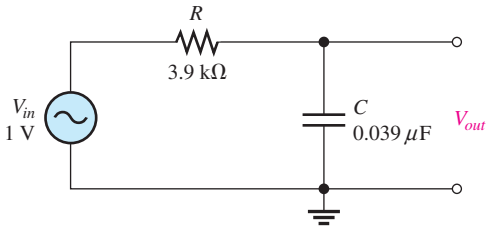

▲ FIGURE 73

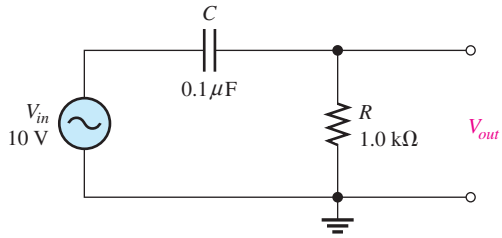

▲ FIGURE 74

SECTION 4 Impedance and Phase Angle of Parallel *RC* Circuits

14. Determine the impedance for the circuit in Figure 75.

15. Determine the impedance and the phase angle in Figure 76.

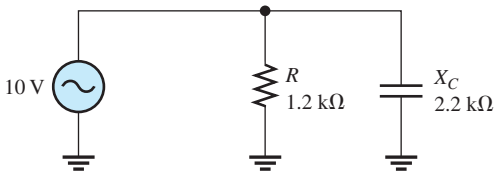

▲ FIGURE 75

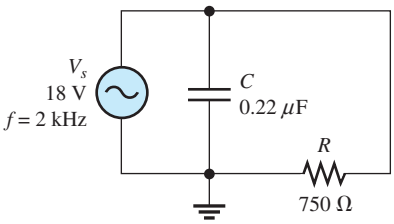

▲ FIGURE 76

www.EngineeringBooksPdf.com

16. Repeat Problem 15 for the following frequencies:

(a) 1.5 kHz **(b)** 3.0 kHz **(c)** 5.0 kHz **(d)** 10 kHz

17. Determine the impedance and phase angle in Figure 77.

▶ FIGURE 77

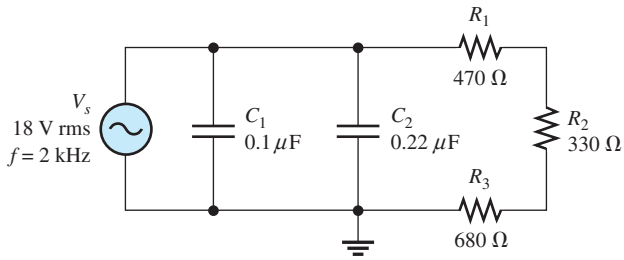

SECTION 5 Analysis of Parallel *RC* Circuits

18. For the circuit in Figure 78, find all the currents and voltages.

19. For the parallel circuit in Figure 79, find each branch current and the total current. What is the phase angle between the source voltage and the total current?

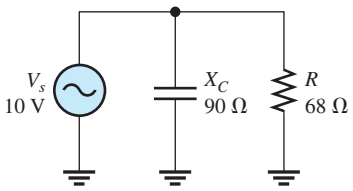

▲ FIGURE 78

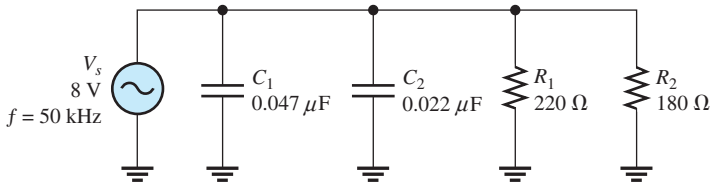

▲ FIGURE 79

20. For the circuit in Figure 80, determine the following:

(a) Z **(b)** I_R **(c)** I_C **(d)** I_{tot} **(e)** θ

21. Repeat Problem 20 for $R = 4.7\ \text{k}\Omega$, $C = 0.047\ \mu F$, and $f = 500$ Hz.

22. Convert the circuit in Figure 81 to an equivalent series form.

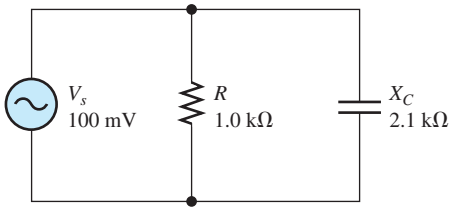

▲ FIGURE 80

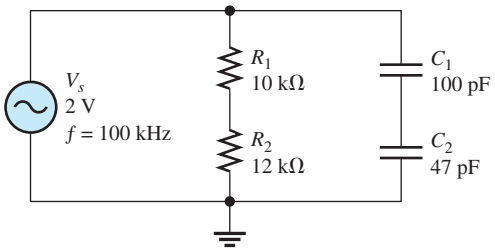

▲ FIGURE 81

SECTION 6 Analysis of Series-Parallel *RC* Circuits

23. Determine the voltages across each element in Figure 82. Find the phase angle of the circuit.

24. Is the circuit in Figure 82 predominantly resistive or predominantly capacitive?

25. Find the current through each branch and the total current in Figure 82.

26. For the circuit in Figure 83, determine the following:

(a) I_{tot} **(b)** θ **(c)** V_{R1} **(d)** V_{R2} **(e)** V_{R3} **(f)** V_C

www.EngineeringBooksPdf.com

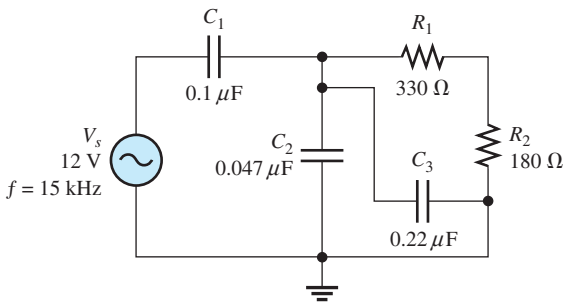

▲ FIGURE 82

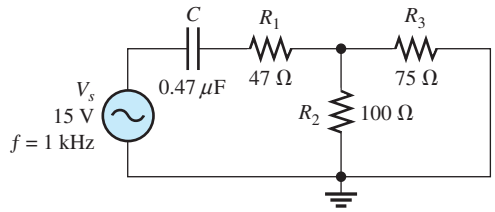

▲ FIGURE 83

SECTION 7 Power in *RC* Circuits

27. In a certain series *RC* circuit, the true power is 2 W, and the reactive power is 3.5 VAR. Determine the apparent power.

28. In Figure 71, what is the true power and the reactive power?

29. What is the power factor for the circuit of Figure 81?

30. Determine P_{true}, P_r, P_a, and *PF* for the circuit in Figure 83. Draw the power triangle.

SECTION 8 Basic Applications

31. The lag circuit in Figure 73 also acts as a low-pass filter. Draw a response curve for this circuit by plotting the output voltage versus frequency for 0 Hz to 10 kHz in 1 kHz increments.

32. Plot the frequency response curve for the circuit in Figure 74 for a frequency range of 0 Hz to 10 kHz in 1 kHz increments.

33. Draw the voltage phasor diagram for each circuit in Figures 73 and 74 for a frequency of 5 kHz with $V_{in} = 1$ V rms.

34. The rms value of the signal voltage out of amplifier *A* in Figure 84 is 50 mV. If the input resistance to amplifier *B* is 10 kΩ, how much of the signal is lost due to the coupling capacitor (C_c) when the frequency is 3 kHz?

▶ FIGURE 84

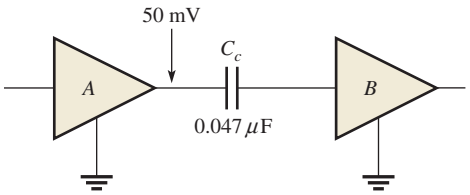

35. Determine the cutoff frequency for each circuit in Figures 73 and 74.

36. Determine the bandwidth of the circuit in Figure 73.

SECTION 9 Troubleshooting

37. Assume that the capacitor in Figure 85 is excessively leaky. Show how this degradation affects the output voltage and phase angle, assuming that the leakage resistance is 5 kΩ and the frequency is 10 Hz.

▶ FIGURE 85

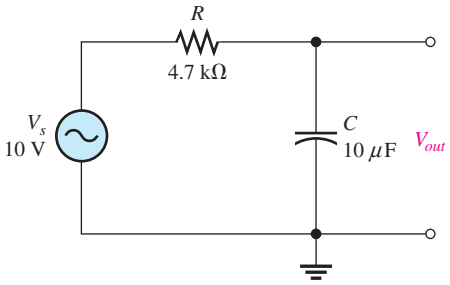

www.EngineeringBooksPdf.com

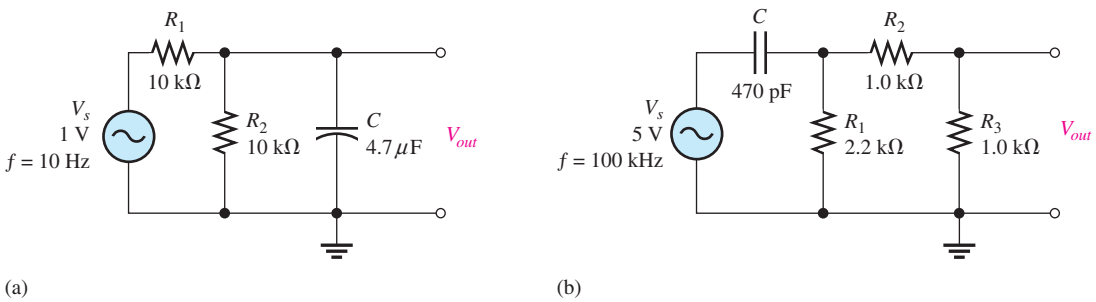

▲ FIGURE 86

38. Each of the capacitors in Figure 86 has developed a leakage resistance of 2 kΩ. Determine the output voltages under this condition for each circuit.

39. Determine the output voltage for the circuit in Figure 86(a) for each of the following failure modes, and compare it to the correct output:

(a) R_1 open **(b)** R_2 open **(c)** C open **(d)** C shorted

40. Determine the output voltage for the circuit in Figure 86(b) for each of the following failure modes, and compare it to the correct output:

(a) C open **(b)** C shorted **(c)** R_1 open **(d)** R_2 open **(e)** R_3 open

ADVANCED PROBLEMS

41. A single 240 V, 60 Hz source drives two loads. Load A has an impedance of 50 Ω and a power factor of 0.85. Load B has an impedance of 72 Ω and a power factor of 0.95.

(a) How much current does each load draw?

(b) What is the reactive power in each load?

(c) What is the true power in each load?

(d) What is the apparent power in each load?

42. What value of coupling capacitor is required in Figure 87 so that the signal voltage at the input of amplifier 2 is at least 70.7% of the signal voltage at the output of amplifier 1 when the frequency is 20 Hz? Disregard the input resistance of the amplifier.

▶ FIGURE 87

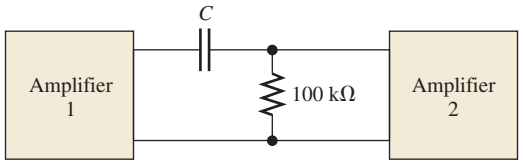

43. Determine the value of R_1 required to get a phase angle of 30° between the source voltage and the total current in Figure 88.

44. Draw the voltage and current phasor diagram for Figure 89.

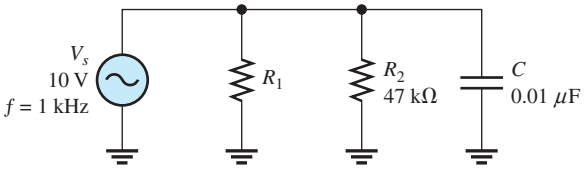

▲ FIGURE 88

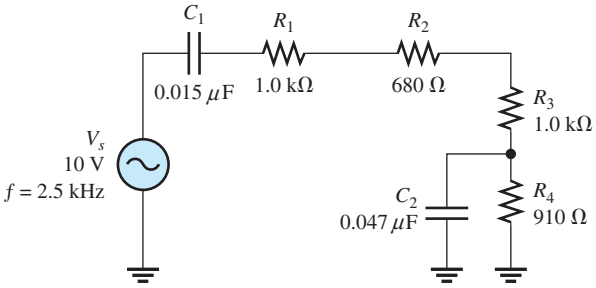

▲ FIGURE 89

www.EngineeringBooksPdf.com

45. A certain load dissipates 1.5 kW of power with an impedance of 12 Ω and a power factor of 0.75. What is its reactive power? What is its apparent power?

46. Determine the series element or elements that are in the block of Figure 90 to meet the following overall circuit requirements:

(a) $P_{true} = 400$ W **(b)** leading power factor (I_{tot} leads V_s)

47. Determine the value of C_2 in Figure 91 when $V_A = V_B$.

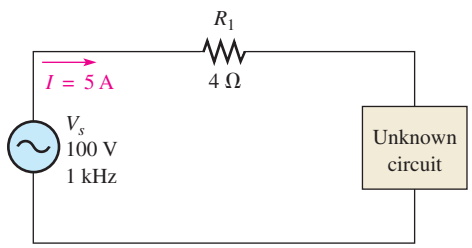

▲ FIGURE 90

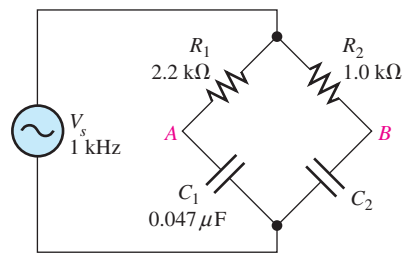

▲ FIGURE 91

48. Draw the schematic for the circuit in Figure 92 and determine if the waveform on the scope is correct. If there is a fault in the circuit, identify it.

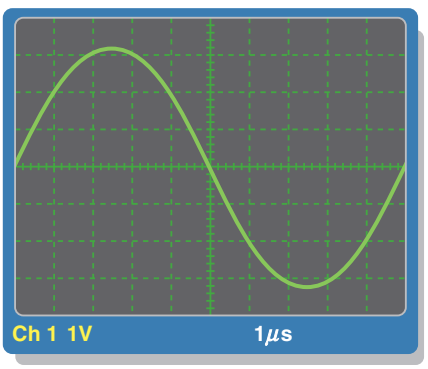

(a) Oscilloscope display

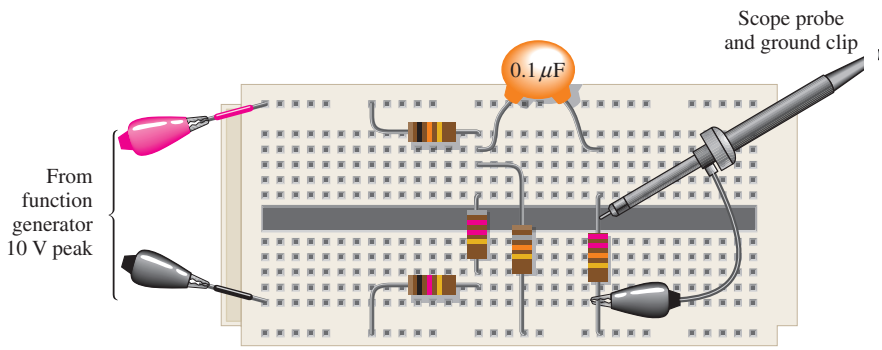

(b) Circuit with leads connected

▲ FIGURE 92

MULTISIM TROUBLESHOOTING PROBLEMS

49. Open file P10-49; files are found at www.pearsonhighered.com/floyd/. Determine if there is a fault and, if so, identify it.

50. Open file P10-50. Determine if there is a fault and, if so, identify it.

51. Open file P10-51. Determine if there is a fault and, if so, identify it.

52. Open file P10-52. Determine if there is a fault and, if so, identify it.

53. Open file P10-53. Determine if there is a fault and, if so, identify it.

54. Open file P10-54. Determine if there is a fault and, if so, identify it.

55. Open the Multisim file E10-14. Modify the circuit so that you can measure the phase shift as shown in Figure 39 by moving ground and using a Tektronix simulated scope as shown in Figure 40. You will need to trigger the scope with Normal mode triggering. You should be able to set up the display as shown in Figure 40 to measure the phase shift. Then simulate a shorted capacitor C_1 and determine the effect on phase shift. (You will need to reset the amplitudes to make an accurate check.)

www.EngineeringBooksPdf.com

ANSWERS

SECTION CHECKUPS

SECTION 1 Sinusoidal Response of Series *RC* Circuits

1. V_C frequency is 60 Hz, I frequency is 60 Hz.
2. The capacitive reactance and resistance
3. θ is closer to 0° when $R > X_C$.

SECTION 2 Impedance and Phase Angle of Series *RC* Circuits

1. Impedance is the total opposition to sinusoidal current expressed in ohms.
2. V_s lags I.
3. The capacitive reactance produces the phase angle.
4. $Z = \sqrt{R^2 + X_C^2} = 59.9\ \text{k}\Omega$; $\theta = \tan^{-1}(X_C/R) = 56.6°$

SECTION 3 Analysis of Series *RC* Circuits

1. $V_s = \sqrt{V_R^2 + V_C^2} = 7.2\ \text{V}$
2. $\theta = \tan^{-1}(V_C/V_R) = 56.3°\text{s}$
3. $\theta = 90°$
4. **(a)** X_C decreases when f increases.
   (b) Z decreases when f increases.
   (c) θ decreases when f increases.
5. $\phi = 90° - \tan^{-1}(X_C/R) = 62.8°$
6. $V_{out} = (R/\sqrt{R^2 + X_C^2})V_{in} = 8.9\ \text{V rms}$

SECTION 4 Impedance and Phase Angle of Parallel *RC* Circuits

1. $Z = RX_C/\sqrt{R^2 + X_C^2} = 545\ \Omega$
2. *Conductance* is the reciprocal of resistance; *capacitive susceptance* is the reciprocal of capacitive reactance; and *admittance* is the reciprocal of impedance.
3. $Y = 1/Z = 10\ \text{mS}$
4. $Y = \sqrt{G^2 + B_C^2} = 24\ \text{mS}$

SECTION 5 Analysis of Parallel *RC* Circuits

1. $I_{tot} = V_sY = 21\ \text{mA}$
2. $\theta = \tan^{-1}(I_C/I_R) = 56.3°$; $I_{tot} = \sqrt{I_R^2 + I_C^2} = 18\ \text{mA}$
3. $\theta = 90°$

SECTION 6 Analysis of Series-Parallel *RC* Circuits

1. See Figure 93.
2. $V_1 = I_{tot}R_1 = 6.71\ \text{V}$

▶ FIGURE 93

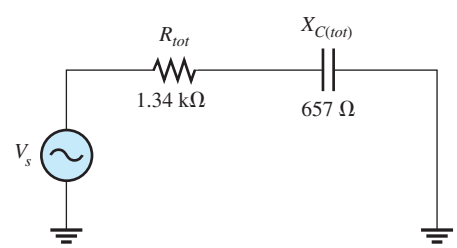

www.EngineeringBooksPdf.com

SECTION 7 Power in *RC* Circuits

1. Power dissipation is due to the resistance.
2. $PF = \cos 45° = 0.707$
3. $P_{\text{true}} = I_{tot}^2 R = 1.32\text{ kW}$; $P_r = I_{tot}^2 X_C = 1.84\text{ kVAR}$; $P_a = I_{tot}^2 Z = 2.26\text{ kVA}$

SECTION 8 Basic Applications

1. 180°
2. Output is across the capacitor.

SECTION 9 Troubleshooting

1. The leakage resistance acts in parallel with *C*, which alters the circuit time constant.
2. The capacitor is open.
3. A shorted capacitor, open resistor, no source voltage, or open contact can cause 0 V across the capacitor.

RELATED PROBLEMS FOR EXAMPLES

1 2.42 kΩ; 65.6°
2 2.56 V
3 65.5°
4 7.14 V
5 15.9 kΩ; 86.4°
6 Phase lag ϕ increases.
7 Output voltage decreases.
8 Phase lead ϕ decreases; output voltage increases.
9 24.3 Ω
10 4.60 mS
11 6.16 mA
12 117 mA; 31°
13 $R_{\text{eq}} = 8.99\text{ k}\Omega$; $X_{C(\text{eq})} = 4.38\text{ k}\Omega$
14 $V_1 = 7.04\text{ V}$; $V_2 = 3.21\text{ V}$
15 0.146
16 990 μW
17 1.60 kHz
18 7.29 V
19 Resistor open

TRUE/FALSE QUIZ

1. F **2.** F **3.** F **4.** T **5.** T **6.** T **7.** T **8.** F **9.** F **10.** F

SELF-TEST

1. (c) **2.** (b) **3.** (b) **4.** (a) **5.** (d) **6.** (b) **7.** (a) **8.** (d)
9. (c) **10.** (b) **11.** (d) **12.** (d) **13.** (c) **14.** (b) **15.** (d)

TROUBLESHOOTING: SYMPTOM AND CAUSE

1. (b)
2. (b)
3. (a)
4. (c)
5. (b)

www.EngineeringBooksPdf.com

PROBLEMS – ODD-NUMBERED ANSWERS

1. 8 kHz; 8 kHz

3. **(a)** 288 Ω **(b)** 1209 Ω

5. **(a)** 726 kΩ **(b)** 155 kΩ **(c)** 91.5 kΩ **(d)** 63.0 kΩ

7. **(a)** 34.7 mA **(b)** 4.14 mA

9. $I_{tot} = 12.3$ mA; $V_{C1} = 1.31$ V; $V_{C2} = 0.595$ V; $V_R = 0.616$ V; $\theta = 72.0°$ (V_s lagging I_{tot})

11. 808 Ω; −36.1°

13. **(a)** 90° **(b)** 86.4° **(c)** 57.8° **(d)** 9.04°

15. 326 Ω; 64.3°

17. 245 Ω; 80.5°

19. $I_{C1} = 118$ mA; $I_{C2} = 55.3$ mA; $I_{R1} = 36.4$ mA; $I_{R2} = 44.4$ mA; $I_{tot} = 191$ mA; $\theta = 65.0°$ (V_s lagging I_{tot})

21. **(a)** 3.86 kΩ **(b)** 21.3 μA **(c)** 14.8 μA **(d)** 25.9 μA **(e)** 34.8° (V_s lagging I_{tot})

23. $V_{C1} = 8.74$ V; $V_{C2} = 3.26$ V; $V_{C3} = 3.26$ V; $V_{R1} = 2.11$ V; $V_{R2} = 1.15$ V; $\theta = 85.5°$

25. $I_{tot} = 82.4$ mA; $I_{C2} = 14.4$ mA; $I_{C3} = 67.6$ mA; $I_{R1} = I_{R2} = 6.39$ mA

27. 4.03 VA

29. 0.915

31. Use the formula, $V_{out} = \left(\frac{X_C}{Z_{tot}}\right)1$ V. See Figure P–12.

FREQUENCY (kHz)	X_C (kΩ)	Z_{tot} (kΩ)	V_{out} (V)
0			1.000
1	4.08	5.64	0.723
2	2.04	4.40	0.464
3	1.36	4.13	0.329
4	1.02	4.03	0.253
5	0.816	3.98	0.205
6	0.680	3.96	0.172
7	0.583	3.94	0.148
8	0.510	3.93	0.130
9	0.453	3.93	0.115
10	0.408	3.92	0.104

www.EngineeringBooksPdf.com

▶ FIGURE P–12

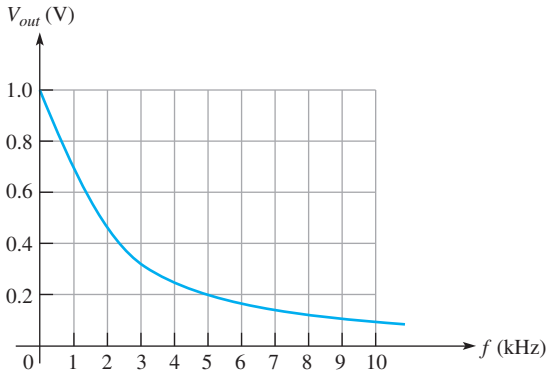

▶ FIGURE P–13

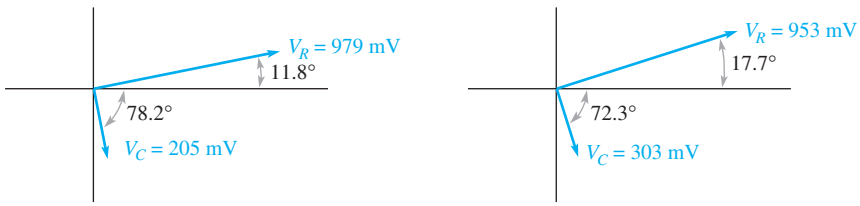

(a) For Figure 73 (b) For Figure 74

33. See Figure P–13.

35. Figure 73: 1.05 kHz; Figure 74: 1.59 kHz

37. No leakage: $V_{out} = 3.21$ V; $\theta = 18.7°$;
Leakage: $V_{out} = 2.83$ V, $\theta = 33.3°$

39. **(a)** 0 V **(b)** 0.321 V **(c)** 0.5 V **(d)** 0 V

41. **(a)** $I_{L(A)} = 4.8$ A; $I_{L(B)} = 3.33$ A
(b) $P_{r(A)} = 606$ VAR; $P_{r(B)} = 250$ VAR
(c) $P_{\text{true}(A)} = 979$ W; $P_{\text{true}(B)} = 758$ W
(d) $P_{a(A)} = 1151$ VA; $P_{a(B)} = 798$ VA

43. 11.4 kΩ

45. $P_r = 1.32$ kVAR; $P_a = 2$ kVA

47. 0.103 μF

49. C is leaky.

51. No fault

53. R_2 is open.

55. Phase shift with C_1 shorted = 13.7°

PHOTO CREDITS FOR REOCCURRING IMAGES

CD Icon: Stockbyte/Getty Images; **Computer Chips:** Photodisc/Thinkstock; **Computer:** Jeff Maloney/Photodisc/Getty Images; **Fiber Optic:** discpicture/Shutterstock.

www.EngineeringBooksPdf.com

INDUCTORS

CHAPTER OUTLINE

1 The Basic Inductor
2 Types of Inductors
3 Series and Parallel Inductors
4 Inductors in DC Circuits
5 Inductors in AC Circuits
6 Inductor Applications
Application Assignment: Putting Your Knowledge to Work

CHAPTER OBJECTIVES

- Describe the basic structure and characteristics of an inductor
- Discuss various types of inductors
- Analyze series and parallel inductors
- Analyze inductive dc switching circuits
- Analyze inductive ac circuits
- Discuss some inductor applications

KEY TERMS

- Inductor
- Winding
- Coil
- Induced voltage
- Inductance (L)
- Henry (H)
- Winding resistance
- RL time constant
- Inductive reactance
- Quality factor (Q)

APPLICATION ASSIGNMENT PREVIEW

While working on a piece of defective communications equipment, you are asked to check out the unmarked coils that have been removed from the system and determine their approximate inductance value by measuring the time constant. After studying this chapter, you should be able to complete the application assignment.

VISIT THE COMPANION WEBSITE

Study aids for this chapter are available at http://www.pearsonhighered.com/floyd/

INTRODUCTION

Inductance is the property of a coil of wire that opposes a change in current. The basis for inductance is the electromagnetic field that surrounds any conductor when there is current through it. The electrical component designed to have the property of inductance is called an *inductor, coil* or in some applications *choke*. These terms refer to the same type of device. The term *choke* is usually associated with inductors that are used to block high frequencies.

In this chapter, you will study the basic inductor and its characteristics. Various types of inductors are covered in terms of their physical construction and their electrical properties. The basic behavior of inductors in both dc and ac circuits is discussed, and series and parallel combinations are analyzed.

Streeter Photography/Alamy

From Chapter 11 of *Electronics Fundamentals: Circuits, Devices, and Applications*, Eighth Edition, Thomas L. Floyd, David M. Buchla. Copyright © 2010 by Pearson Education, Inc. Published by Pearson Prentice Hall. All rights reserved.

www.EngineeringBooksPdf.com

1 THE BASIC INDUCTOR

An **inductor** is a passive electrical component, formed by a coil of wire, that exhibits the property of inductance.

After completing this section, you should be able to

- **Describe the basic structure and characteristics of an inductor**
  - Define *inductance* and state its unit
  - Discuss induced voltage
  - Explain how an inductor stores energy
  - Specify how the physical characteristics affect inductance
  - Discuss winding resistance and winding capacitance
  - State Faraday's law
  - State Lenz's law

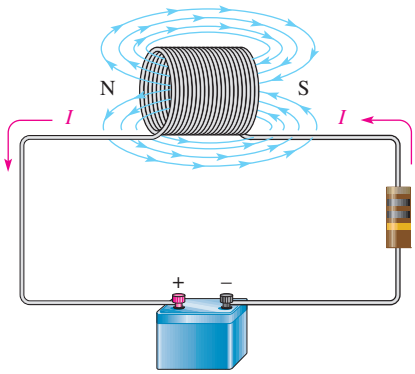

▶ FIGURE 1

Current through a coil creates a three-dimensional electromagnetic field. The resistor limits the current.

When a length of wire is formed into a coil, as shown in Figure 1, it becomes an inductor. Current through the coil produces an electromagnetic field. The magnetic lines of force around each loop (turn) in the **winding** of the coil effectively add to the lines of force around the adjoining loops, forming a stronger magnetic field within and around the coil, as shown. The net direction of the total magnetic field creates a north and a south pole. A schematic symbol for the inductor is shown in Figure 2.

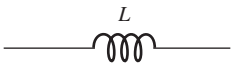

▲ FIGURE 2

Symbol for an inductor.

Inductance

When there is current through an inductor, an electromagnetic field is established. When the current changes, the electromagnetic field also changes. An increase in current expands the field, and a decrease in current reduces it. Therefore, a changing current produces a changing electromagnetic field around the inductor (also known as **coil** and in some applications, **choke**). In turn, the changing electromagnetic field causes an **induced voltage** across the coil in a direction to oppose the change in current. This property is called *self-inductance* but is usually referred to as simply *inductance,* symbolized by *L*.

Inductance is a measure of a coil's ability to establish an induced voltage as a result of a change in its current, and that induced voltage is in a direction to oppose that change in current.

This icon indicates selected websites for further information on topics in this section. See the Companion Website provided with this text.

www.EngineeringBooksPdf.com

The Unit of Inductance The **henry**, symbolized by H, is the basic unit of inductance. By definition, the inductance of a coil is one henry when current through the coil, changing at the rate of one ampere per second, induces one volt across the coil. The henry is a large unit, so in practical applications, millihenries (mH) and microhenries (μH) are the more common units.

Energy Storage An inductor stores energy in the magnetic field created by the current. The energy stored is expressed as

$$W = \frac{1}{2}LI^2$$

Equation 1

As you can see, the energy stored is proportional to the inductance and the square of the current. When current (I) is in amperes and inductance (L) is in henries, the energy (W) is in joules.

HISTORY NOTE

Joseph Henry
1797–1878

Henry began his career as a professor at a small school in Albany, NY, and later became the first director of the Smithsonian Institution. He was the first American since Franklin to undertake original scientific experiments. He was the first to superimpose coils of wire wrapped on an iron core and first observed the effects of electromagnetic induction in 1830, a year before Faraday, but he did not publish his findings. Henry did obtain credit for the discovery of self-induction, however. The unit of inductance is named in his honor. (Photo credit: Courtesy of the Smithsonian Institution. Photo number 52,054.)

Physical Characteristics of an Inductor

The following characteristics are important in establishing the inductance of a coil: the permeability of the core material, the number of turns of wire, the core length, and the cross-sectional area of the core.

Core Material As discussed earlier, an inductor is basically a coil of wire. The material around which the coil is formed is called the **core**. Coils are wound on either nonmagnetic or magnetic materials. Examples of nonmagnetic materials are air, wood, copper, plastic, and glass. The permeabilities of these materials are the same as for a vacuum. Examples of magnetic materials are iron, nickel, steel, cobalt, or alloys. These materials have permeabilities that are hundreds or thousands of times greater than that of a vacuum and are classified as *ferromagnetic.* A ferromagnetic core provides a lower reluctance path for the magnetic lines of force and thus permits a stronger magnetic field.

The permeability (μ) of the core material determines how easily a magnetic field can be established. The inductance is directly proportional to the permeability of the core material.

Physical Parameters As indicated in Figure 3, the number of turns of wire, the length, and the cross-sectional area of the core are factors in setting the value of inductance. The inductance is inversely proportional to the length of the core and directly proportional to the cross-sectional area. Also, the inductance is directly related to the number of turns squared. This relationship is as follows:

$$L = \frac{N^2\mu A}{l}$$

Equation 2

where L is the inductance in henries (H), N is the number of turns, μ is the permeability in henries per meter (H/m), A is the cross-sectional area in meters squared (m^2), and l is the core length in meters (m).

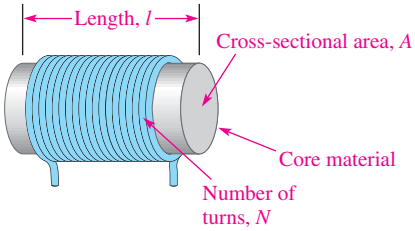

FIGURE 3

Factors that determine the inductance of a coil.

www.EngineeringBooksPdf.com

EXAMPLE 1

Determine the inductance of the coil in Figure 4. The permeability of the core is 0.25×10^{-3} H/m.

▶ FIGURE 4

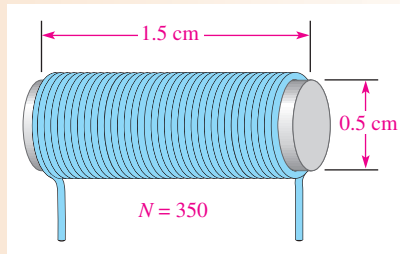

Solution 1 cm = 0.01 m. Therefore, 1.5 cm = 0.015 m and 0.5 cm = 0.005 m.

$$A = \pi r^2 = \pi(0.25 \times 10^{-2}\text{ m})^2 = 1.96 \times 10^{-5}\text{ m}^2$$

$$L = \frac{N^2\mu A}{l} = \frac{(350)^2(0.25 \times 10^{-3}\text{ H/m})(1.96 \times 10^{-5}\text{ m}^2)}{0.015\text{ m}} = \mathbf{40\ mH}$$

*Related Problem** Determine the inductance of a coil with 400 turns on a core that is 2 cm long and has a diameter of 1 cm. The permeability is 0.25×10^{-3} H/m.

*Answers are at the end of the chapter.

Winding Resistance

When a coil is made of a certain material (for example, insulated copper wire), that wire has a certain resistance per unit of length. When many turns of wire are used to construct a coil, the total resistance may be significant. This inherent resistance is called the *dc resistance* or the **winding resistance (R_W)**.

Although this resistance is distributed along the length of the wire, as shown in Figure 5(a), it is sometimes indicated in a schematic as resistance appearing in series with the inductance of the coil, as shown in Figure 5(b). In many applications, the winding resistance can be ignored and the coil can be considered an ideal inductor. In other cases, the resistance must be considered.

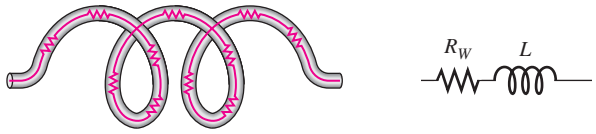

(a) The wire has resistance distributed along its length.

(b) Equivalent circuit

▲ FIGURE 5

Winding resistance of a coil.

SAFETY NOTE

Be careful when working with inductors because high induced voltages can be developed due to a rapidly changing magnetic field. This occurs when the current is interrupted or its value abruptly changed.

Winding Capacitance

When two conductors are placed side by side, there is always some capacitance between them. Thus, when many turns of wire are placed close together in a coil, a certain amount of stray capacitance, called *winding capacitance* (C_W), is a natural side effect. In many applications, this winding capacitance is very small and has no significant effect. In other cases, particularly at high frequencies, it may become quite important.

www.EngineeringBooksPdf.com

The equivalent circuit for an inductor with both its winding resistance (R_W) and its winding capacitance (C_W) is shown in Figure 6. The capacitance effectively acts in parallel. The total of the stray capacitances between each loop of the winding is indicated in a schematic as a capacitance appearing in parallel with the coil and its winding resistance, as shown in Figure 6(b).

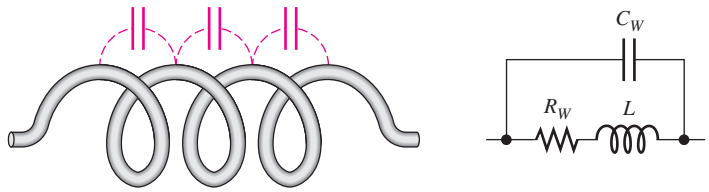

(a) Stray capacitance between each loop appears as a total parallel capacitance (C_W).

(b) Equivalent circuit

▲ FIGURE 6

Winding capacitance of a coil.

Review of Faraday's Law

Faraday's law is reviewed here because of its importance in the study of inductors. Faraday found that by moving a magnet through a coil of wire, a voltage was induced across the coil, and that when a complete path was provided, the induced voltage caused an induced current. He observed that

The amount of voltage induced in a coil is directly proportional to the rate of change of the magnetic field with respect to the coil.

This principle is illustrated in Figure 7, where a bar magnet is moved through a coil of wire. An induced voltage is indicated by the voltmeter connected across the coil. The faster the magnet is moved, the greater the induced voltage.

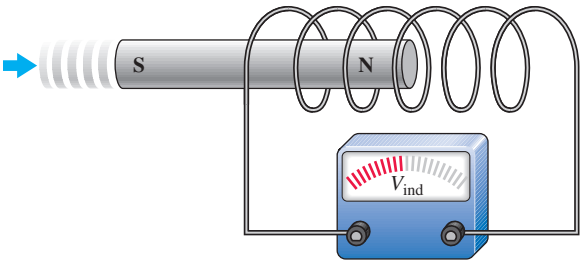

◀ FIGURE 7

Induced voltage is created by a changing magnetic field.

When a wire is formed into a certain number of loops or turns and is exposed to a changing magnetic field, a voltage is induced across the coil. The induced voltage is proportional to the number of turns, N, of the wire in the coil and to the rate at which the magnetic field changes.

Lenz's Law

Lenz's law adds to Faraday's law by defining the direction of induced voltage.

When the current through a coil changes and an induced voltage is created as a result of the changing magnetic field, the direction of the induced voltage is such that it always opposes the change in current.

www.EngineeringBooksPdf.com

Figure 8 illustrates Lenz's law. In part (a), the current is constant and is limited by R_1. There is no induced voltage because the magnetic field is unchanging. In part (b), the switch suddenly is closed, placing R_2 in parallel with R_1 and thus reducing the resistance. Naturally, the current tries to increase and the magnetic field begins to expand, but the induced voltage opposes this attempted increase in current for an instant.

In Figure 8(c), the induced voltage gradually decreases, allowing the current to increase. In part (d), the current has reached a constant value as determined by the parallel

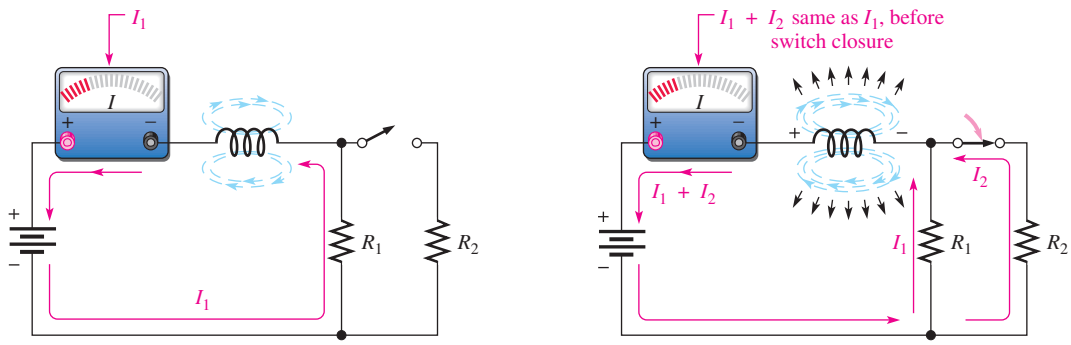

(a) Switch open: Constant current and constant magnetic field; no induced voltage.

(b) At instant of switch closure: Expanding magnetic field induces voltage, which opposes an increase in total current. The total current remains the same at this instant.

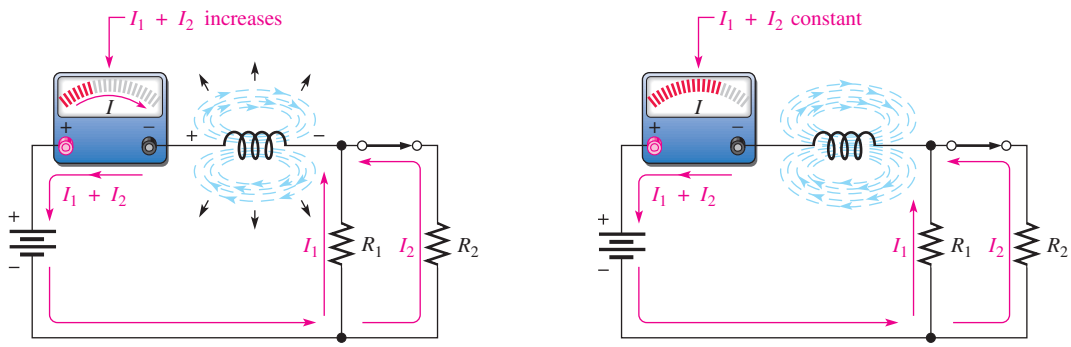

(c) Right after switch closure: The rate of expansion of the magnetic field decreases, allowing the current to increase exponentially as induced voltage decreases.

(d) Switch remains closed: Current and magnetic field reach constant value.

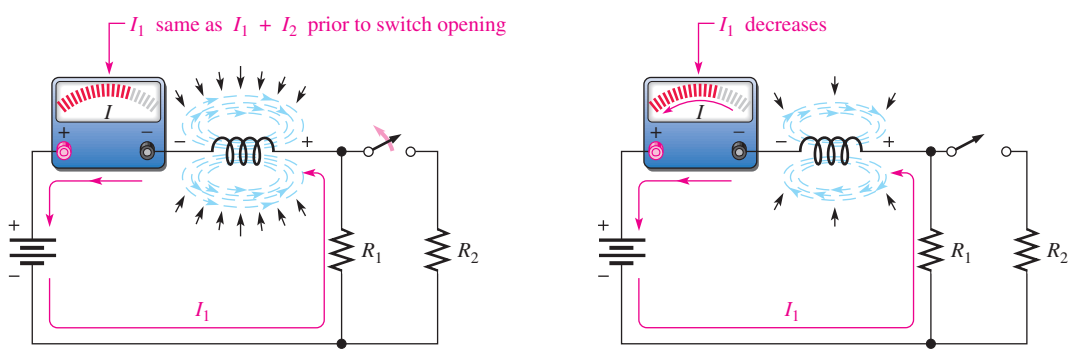

(e) At instant of switch opening: Magnetic field begins to collapse, creating an induced voltage, which opposes a decrease in current.

(f) After switch opening: Rate of collapse of magnetic field decreases, allowing current to decrease exponentially back to original value.

▲ FIGURE 8

Demonstration of Lenz's law in an inductive circuit: When the current tries to change suddenly, the electromagnetic field changes and induces a voltage in a direction that opposes that change in current.

www.EngineeringBooksPdf.com

resistors, and the induced voltage is zero. In part (e), the switch has been suddenly opened, and, for an instant, the induced voltage prevents any decrease in current. In part (f), the induced voltage gradually decreases, allowing the current to decrease back to a value determined by R_1. Notice that the induced voltage has a polarity that opposes any current change. The polarity of the induced voltage is opposite that of the battery voltage for an increase in current and aids the battery voltage for a decrease in current.

SECTION 1 CHECKUP
Answers are at the end of the chapter.

1. List the parameters that contribute to the inductance of a coil.
2. Describe what happens to L when
   (a) N is increased
   (b) the core length is increased
   (c) the cross-sectional area of the core is decreased
   (d) a ferromagnetic core is replaced by an air core
3. Explain why inductors have some winding resistance.
4. Explain why inductors have some winding capacitance.

2 TYPES OF INDUCTORS

Inductors normally are classified according to the type of core material.

After completing this section, you should be able to

- **Discuss various types of inductors**
  - Describe the basic types of fixed inductors
  - Distinguish between fixed and variable inductors

Inductors are made in a variety of shapes and sizes. Basically, they fall into two general categories: fixed and variable. The standard schematic symbols are shown in Figure 9.

Both fixed and variable inductors can be classified according to the type of core material. Three common types are the air core, the iron core, and the ferrite core. Each has a unique symbol, as shown in Figure 10.

(a) Fixed (b) Variable

▲ FIGURE 9

Symbols for fixed and variable inductors.

(a) Air core (b) Iron core (c) Ferrite core

▲ FIGURE 10

Inductor symbols.

Adjustable (variable) inductors usually have a screw-type adjustment that moves a sliding core in and out, thus changing the inductance. A wide variety of inductors exists, and some are shown in Figure 11. Small fixed inductors are usually encapsulated in an insulating material that protects the fine wire in the coil. Encapsulated inductors have an appearance similar to a small resistor.

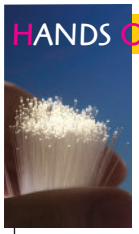

HANDS ON TIP

When breadboarding circuits that include small inductors, it is best to use encapsulated inductors for structural strength. Inductors generally have extremely fine coil wire that is connected to a much larger size of lead wires.

In unencapsulated inductors, these contact points are very vulnerable to breaking if the inductor is frequently inserted and removed from a protoboard.

www.EngineeringBooksPdf.com

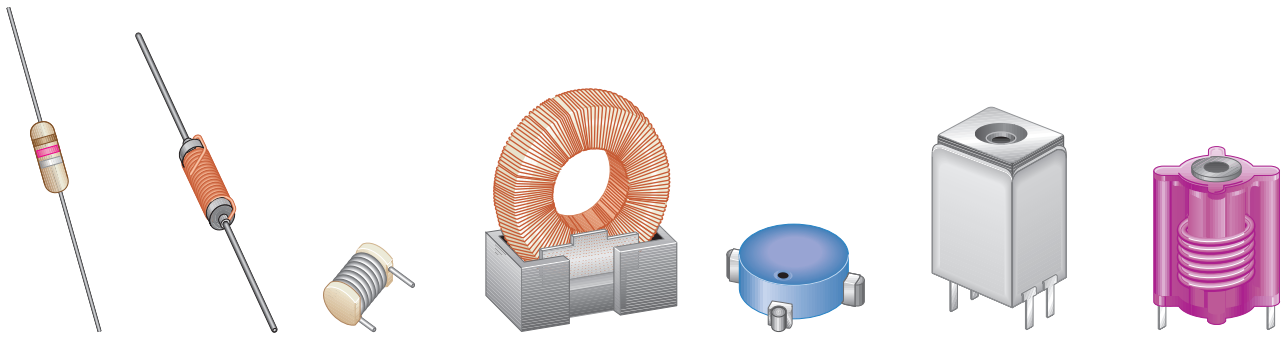

▲ FIGURE 11

Typical inductors.

SECTION 2 CHECKUP

1. Name two general categories of inductors.
2. Identify the inductor symbols in Figure 12.

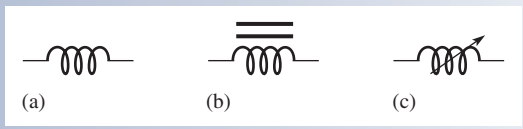

▲ FIGURE 12

3 SERIES AND PARALLEL INDUCTORS

When inductors are connected in series, the total inductance increases. When inductors are connected in parallel, the total inductance decreases.

After completing this section, you should be able to

- **Analyze series and parallel inductors**
  - Determine total series inductance
  - Determine total parallel inductance

Total Series Inductance

When inductors are connected in series, as in Figure 13, the total inductance, L_T, is the sum of the individual inductances. The formula for L_T is expressed in the following equation for the general case of n inductors in series:

Equation 3

$$L_T = L_1 + L_2 + L_3 + \cdots + L_n$$

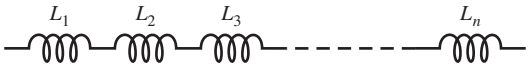

▲ FIGURE 13

Induction in series.

www.EngineeringBooksPdf.com

Notice that the calculation of total inductance in series is analogous to the calculations of total resistance in series and total capacitance in parallel.

EXAMPLE 2 Determine the total inductance for each of the series connections in Figure 14.

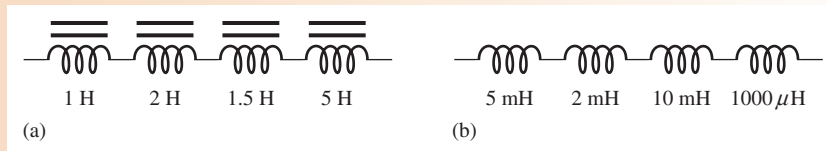

▲ FIGURE 14

Solution In Figure 14(a),

$$L_T = 1\,\text{H} + 2\,\text{H} + 1.5\,\text{H} + 5\,\text{H} = \mathbf{9.5\,H}$$

In Figure 14(b),

$$L_T = 5\,\text{mH} + 2\,\text{mH} + 10\,\text{mH} + 1\,\text{mH} = \mathbf{18\,mH}$$

Note: $1000\,\mu\text{H} = 1\,\text{mH}$

Related Problem What is the total inductance of three $50\,\mu\text{H}$ inductors in series?

Total Parallel Inductance

When inductors are connected in parallel, as in Figure 15, the total inductance is less than the smallest inductance. The general formula states that the reciprocal of the total inductance is equal to the sum of the reciprocals of the individual inductances.

$$\frac{1}{L_T} = \frac{1}{L_1} + \frac{1}{L_2} + \frac{1}{L_3} + \cdots + \frac{1}{L_n}$$

You can calculate total inductance, L_T, by taking the reciprocals of both sides of the previous equation.

$$L_T = \frac{1}{\dfrac{1}{L_1} + \dfrac{1}{L_2} + \dfrac{1}{L_3} + \cdots + \dfrac{1}{L_n}} \qquad \text{Equation 4}$$

This calculation for total inductance in parallel is analogous to the calculations of total parallel resistance and total series capacitance. For series-parallel combinations of inductors, determine the total inductance in the same way as total resistance in series-parallel resistive circuits.

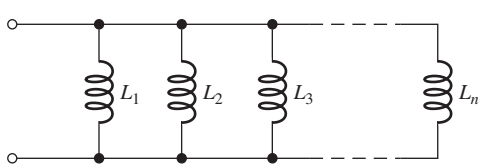

▲ FIGURE 15

Inductors in parallel.

www.EngineeringBooksPdf.com

EXAMPLE 3

Determine L_T in Figure 16.

▶ FIGURE 16

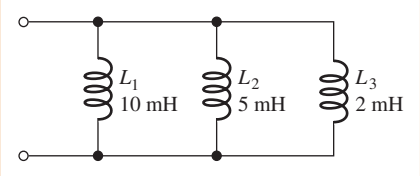

Solution

$$L_T = \frac{1}{\frac{1}{L_1} + \frac{1}{L_2} + \frac{1}{L_3}} = \frac{1}{\frac{1}{10\text{ mH}} + \frac{1}{5\text{ mH}} + \frac{1}{2\text{ mH}}} = \frac{1}{0.8\text{ mH}} = \mathbf{1.25\text{ mH}}$$

Related Problem Determine L_T for the following inductors in parallel: 50 μH, 80 μH, 100 μH, and 150 μH.

SECTION 3 CHECKUP

1. State the rule for combining inductors in series.
2. What is L_T for a series connection of 100 μH, 500 μH, and 2 mH?
3. Five 100 mH coils are connected in series. What is the total inductance?
4. Compare the total inductance in parallel with the smallest-value individual inductor.
5. The calculation of total parallel inductance is analogous to that for total parallel resistance. (True or False)
6. Determine L_T for each parallel combination:
   (a) 100 mH, 50 mH, and 10 mH
   (b) 40 μH and 60 μH
   (c) Ten 1 H coils

4 INDUCTORS IN DC CIRCUITS

Energy is stored in the electromagnetic field of an inductor when it is connected to a dc voltage source. The buildup of current through the inductor occurs in a predictable manner, which is dependent on the time constant of the circuit. The time constant is determined by the inductance and resistance in a circuit.

After completing this section, you should be able to

- **Analyze inductive dc switching circuits**
  - Define *RL time constant*
  - Describe the increase and decrease of current in an inductor
  - Relate the time constant to the energizing and deenergizing of an inductor
  - Describe induced voltage
  - Write the exponential equations for current in an inductor

www.EngineeringBooksPdf.com

When there is constant direct current in an inductor, there is no induced voltage. There is, however, a voltage drop due to the winding resistance of the coil. The inductance itself appears as a short to dc. Energy is stored in the magnetic field according to the formula $W = \frac{1}{2}LI^2$. The only energy conversion to heat occurs in the winding resistance ($P = I^2R_W$). This condition is illustrated in Figure 17.

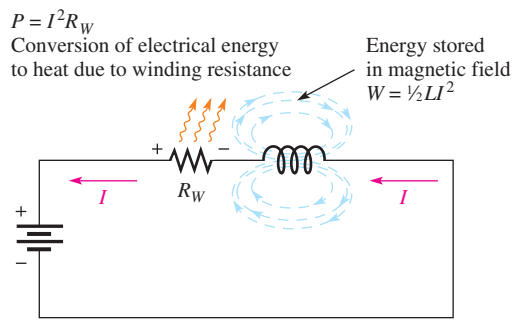

▲ FIGURE 17

Energy storage and conversion to heat in an inductor.

The *RL* Time Constant

Because the inductor's basic action is to develop a voltage that opposes a change in its current, it follows that current cannot change instantaneously in an inductor. A certain time is required for the current to make a change from one value to another. The rate at which the current changes is determined by the *RL* time constant.

The *RL* time constant is a fixed time interval that equals the ratio of the inductance to the resistance.

The formula is

$$\tau = \frac{L}{R} \qquad \text{Equation 5}$$

where τ is in seconds when inductance (L) is in henries and resistance (R) is in ohms.

EXAMPLE 4

A series *RL* circuit has a resistance of 1.0 kΩ and an inductance of 1.0 mH. What is the time constant?

Solution

$$\tau = \frac{L}{R} = \frac{1.0\text{ mH}}{1.0\text{ k}\Omega} = \frac{1.0 \times 10^{-3}\text{ H}}{1.0 \times 10^{3}\ \Omega} = 1.0 \times 10^{-6}\text{ s} = \mathbf{1.0\ \mu s}$$

Related Problem Find the time constant for $R = 2.2\text{ k}\Omega$ and $L = 500\ \mu\text{H}$.

Current in an Inductor

Increasing Current In a series *RL* circuit, the current will increase to approximately 63% of its full value in one time-constant interval after voltage is applied. This buildup of current (analogous to the buildup of capacitor voltage during the charging in an *RC* circuit) follows an exponential curve and reaches the approximate percentage of final current as indicated in Table 1 and as illustrated in Figure 18.

www.EngineeringBooksPdf.com

TABLE 1

Percentage of final current after each time-constant interval during current buildup.

NUMBER OF TIME CONSTANTS	APPROXIMATE % OF FINAL CURRENT
1	63
2	86
3	95
4	98
5	99 (considered 100%)

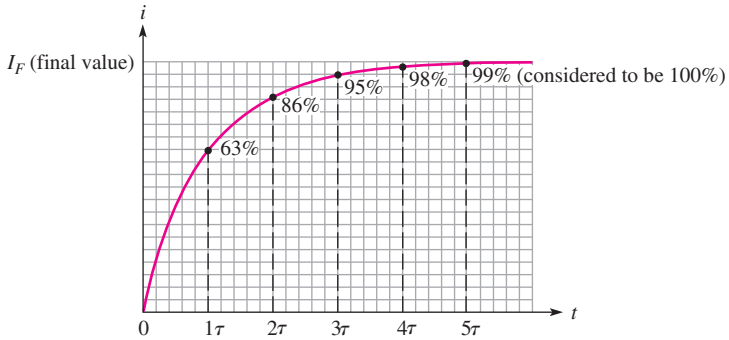

FIGURE 18

Increasing current in an inductor.

The change in current over five time-constant intervals is illustrated in Figure 19. When the current reaches its final value at approximately 5τ, it ceases to change. At this time, the inductor acts as a short (except for winding resistance) to the constant current. The final value of the current is

$$I_F = \frac{V_S}{R} = \frac{10\text{ V}}{1.0\text{ k}\Omega} = 10\text{ mA}$$

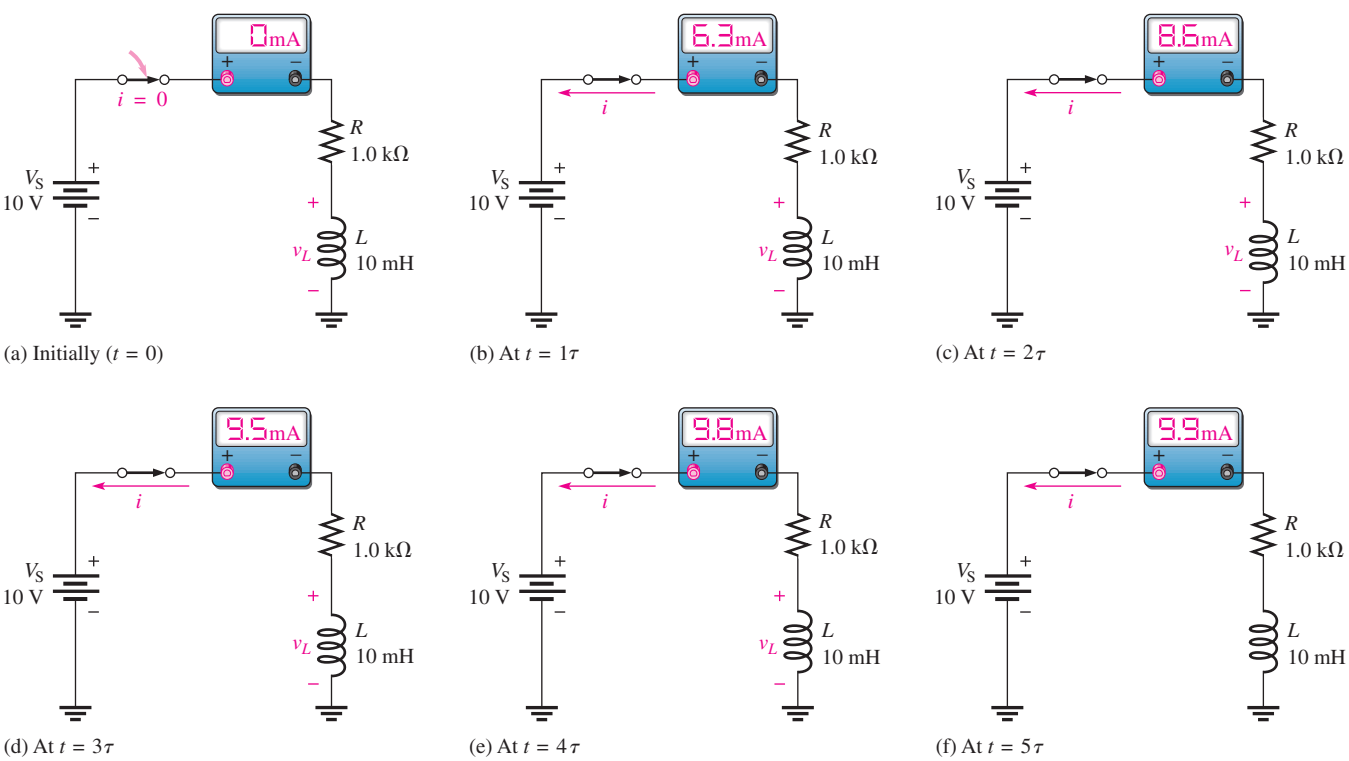

FIGURE 19

Illustration of the exponential buildup of current in an inductor. The current increases approximately 63% during each time-constant interval after the switch is closed. A voltage (v_L) is induced in the coil that tends to oppose the increase in current.

www.EngineeringBooksPdf.com

EXAMPLE 5

Calculate the *RL* time constant for Figure 20. Then determine the current and the time at each time-constant interval, measured from the instant the switch is closed.

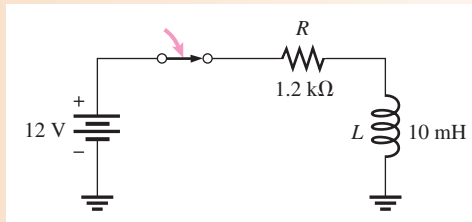

▲ FIGURE 20

Solution The *RL* time constant is

$$\tau = \frac{L}{R} = \frac{10\text{ mH}}{1.2\text{ k}\Omega} = \mathbf{8.33\ \mu s}$$

The final current is

$$I_F = \frac{V_S}{R} = \frac{12\text{ V}}{1.2\text{ k}\Omega} = 10\text{ mA}$$

Use the time-constant percentage values from Table 1.

At 1τ: $i = 0.63(10\text{ mA}) = \mathbf{6.3\ mA}$; $t = \mathbf{8.33\ \mu s}$
At 2τ: $i = 0.86(10\text{ mA}) = \mathbf{8.6\ mA}$; $t = \mathbf{16.7\ \mu s}$
At 3τ: $i = 0.95(10\text{ mA}) = \mathbf{9.5\ mA}$; $t = \mathbf{25.0\ \mu s}$
At 4τ: $i = 0.98(10\text{ mA}) = \mathbf{9.8\ mA}$; $t = \mathbf{33.3\ \mu s}$
At 5τ: $i = 0.99(10\text{ mA}) = 9.9\text{ mA} \cong \mathbf{10\ mA}$; $t = \mathbf{41.7\ \mu s}$

Related Problem Repeat the calculations if $R = 680\ \Omega$ and $L = 100\ \mu\text{H}$.

Decreasing Current Current in an inductor decreases exponentially according to the approximate percentage values shown in Table 2 and in Figure 21.

▼ TABLE 2

Percentage of initial current after each time-constant interval while current is decreasing.

NUMBER OF TIME CONSTANTS	APPROXIMATE % OF INITIAL CURRENT
1	37
2	14
3	5
4	2
5	1 (considered 0)

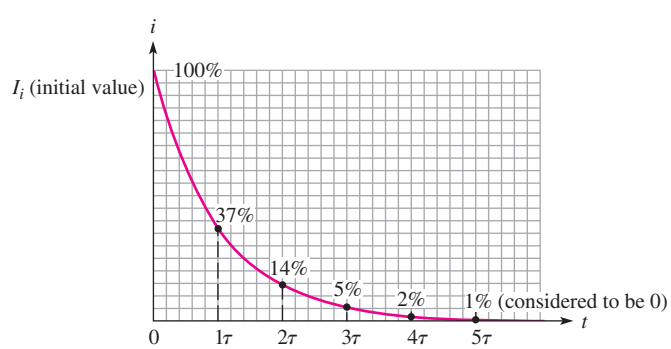

▲ FIGURE 21

Decreasing current in an inductor.

www.EngineeringBooksPdf.com

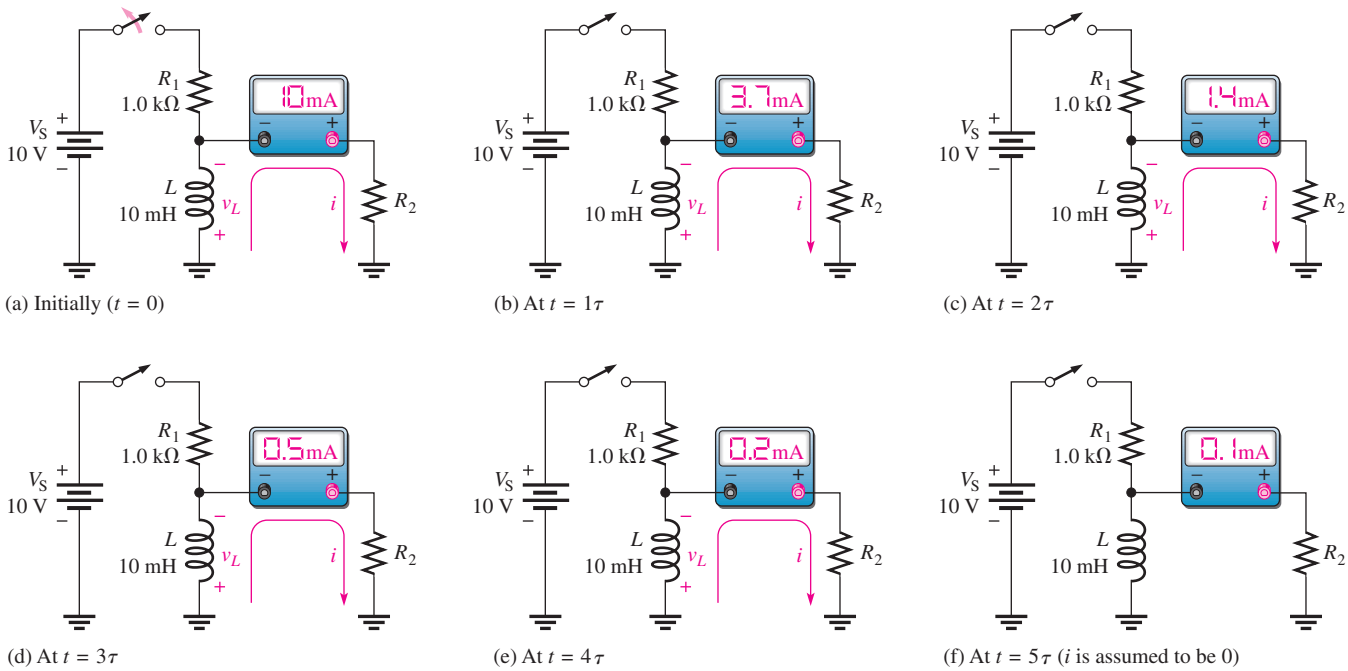

(a) Initially ($t = 0$)
(b) At $t = 1\tau$
(c) At $t = 2\tau$
(d) At $t = 3\tau$
(e) At $t = 4\tau$
(f) At $t = 5\tau$ (i is assumed to be 0)

▲ FIGURE 22

HANDS ON TIP

To measure the current waveform in a series *RL* circuit, you can measure the voltage across the resistor and apply Ohm's law. If the resistor is ungrounded, as in Figure 23, you can use a difference measurement to view the resistor voltage by connecting one oscilloscope probe across each end of the resistor and selecting ADD and Invert on the oscilloscope. Both channels on the oscilloscope should be set to the same VOLTS/DIV setting. Alternatively, you can reverse the components (see the Multisim problem in Example 6.)

The change in current over five time-constant intervals is illustrated in Figure 22. When the current reaches its final value of approximately 0 A, it ceases to change. Before the switch is opened, the current through L is at a constant value of 10 mA, which is determined by R_1 because L acts ideally as a short. When the switch is opened, the induced inductor voltage initially provides 10 mA through R_2. The current then decreases by 63% during each time constant interval.

Response to a Square Wave

A good way to demonstrate both increasing and decreasing current in an *RL* circuit is to use a square wave voltage as the input. The square wave is a useful signal for observing the dc response of a circuit because it provides on and off action similar to a switch. When the square wave goes from its low level to its high level, the current in the circuit responds by exponentially increasing to its final value. When the square wave returns to the zero level, the current in the circuit responds by exponentially decreasing to its zero value. Figure 23 shows input voltage and current waveforms.

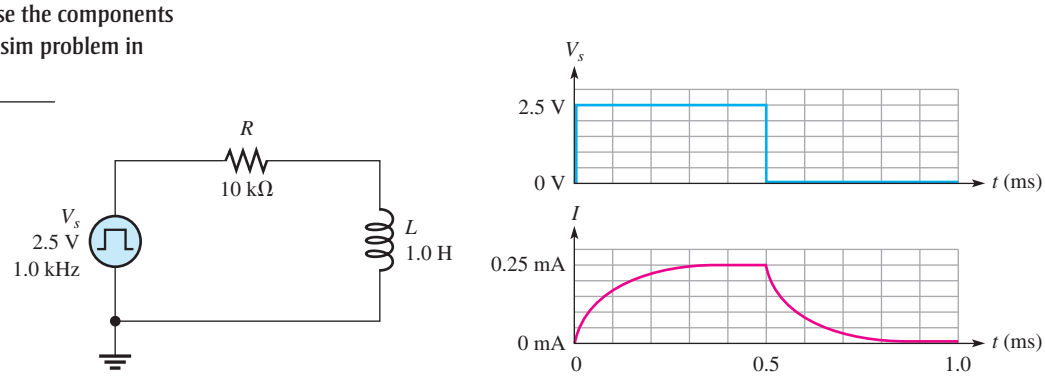

▲ FIGURE 23

www.EngineeringBooksPdf.com

EXAMPLE 6

For the circuit in Figure 23, what is the current at 0.1 ms and at 0.6 ms?

Solution

The *RL* time constant for the circuit is

$$\tau = \frac{L}{R} = \frac{1.0\text{ H}}{10\text{ k}\Omega} = 0.1\text{ ms}$$

If the square wave generator period is long enough for the current to reach its maximum value in 5τ, the current will increase exponentially and during each time constant interval will have a value equal to the percentage of the final current given in Table 1. The final current is

$$I_F = \frac{V_s}{R} = \frac{2.5\text{ V}}{10\text{ k}\Omega} = 0.25\text{ mA}$$

The current at 0.1 ms is

$$i = 0.63(0.25\text{ mA}) = \mathbf{0.158\text{ mA}}$$

At 0.6 ms, the square wave input has been at the 0 V level for 0.1 ms, or 1τ; and, the current decreases from the maximum value toward its final value of 0 mA by 63%. Therefore,

$$i = 0.25\text{ mA} - 0.63(0.25\text{ mA}) = \mathbf{0.092\text{ mA}}$$

Related Problem

What is the current at 0.2 ms and 0.8 ms?

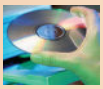

Open the Multisim file E11-06; files are found at www.pearsonhighered.com/floyd/. Notice that the inductor and resistor are reversed in order to ground one side of the resistor and make the measurement of the resistor voltage simpler. The shape of the current in the circuit is the same as the shape of the resistor voltage. By applying Ohm's law to the resistor voltage, you can find the current in the circuit at any instant in time. Confirm that the current at a time 0.1 ms is close to the calculated value.

Voltages in the Series *RL* Circuit

As you know, when current changes in an inductor, a voltage is induced. Let's examine what happens to the induced voltage across the inductor in the series circuit in Figure 24 during one complete cycle of a square wave input. Keep in mind that the generator produces a level that is like switching a dc source on and then puts an "automatic" low resistance (ideally zero) path across the source when it returns to its zero level.

An ammeter placed in the circuit shows the current in the circuit at any instant in time. The V_L waveform is the voltage across the inductor. In Figure 24(a), the square wave has just transitioned from zero to its maximum value of 2.5 V. In accordance with Lenz's law, a voltage is induced across the inductor that opposes this *change* as the magnetic field surrounding the inductor builds up. There is no current in the circuit due to the equal but opposing voltages.

As the magnetic field builds up, the induced voltage across the inductor decreases, and current is in the circuit. After 1τ, the induced voltage across the inductor has decreased by 63%, which causes the current to increase by 63% to 0.158 mA. This is shown in Figure 24(b) at the end of one time constant (0.1 ms).

The voltage on the inductor continues to exponentially decrease to zero, at which point the current is limited only by the circuit resistance. Then the square wave goes back to zero (at $t = 0.5$ ms) as shown in Figure 24(c). Again a voltage is induced across the inductor opposing this change. This time, the polarity of the inductor voltage is reversed due to the collapsing magnetic field. Although the source voltage is 0, the collapsing magnetic field maintains current in the same direction until the current decreases to zero, as shown in Figure 24(d).

www.EngineeringBooksPdf.com

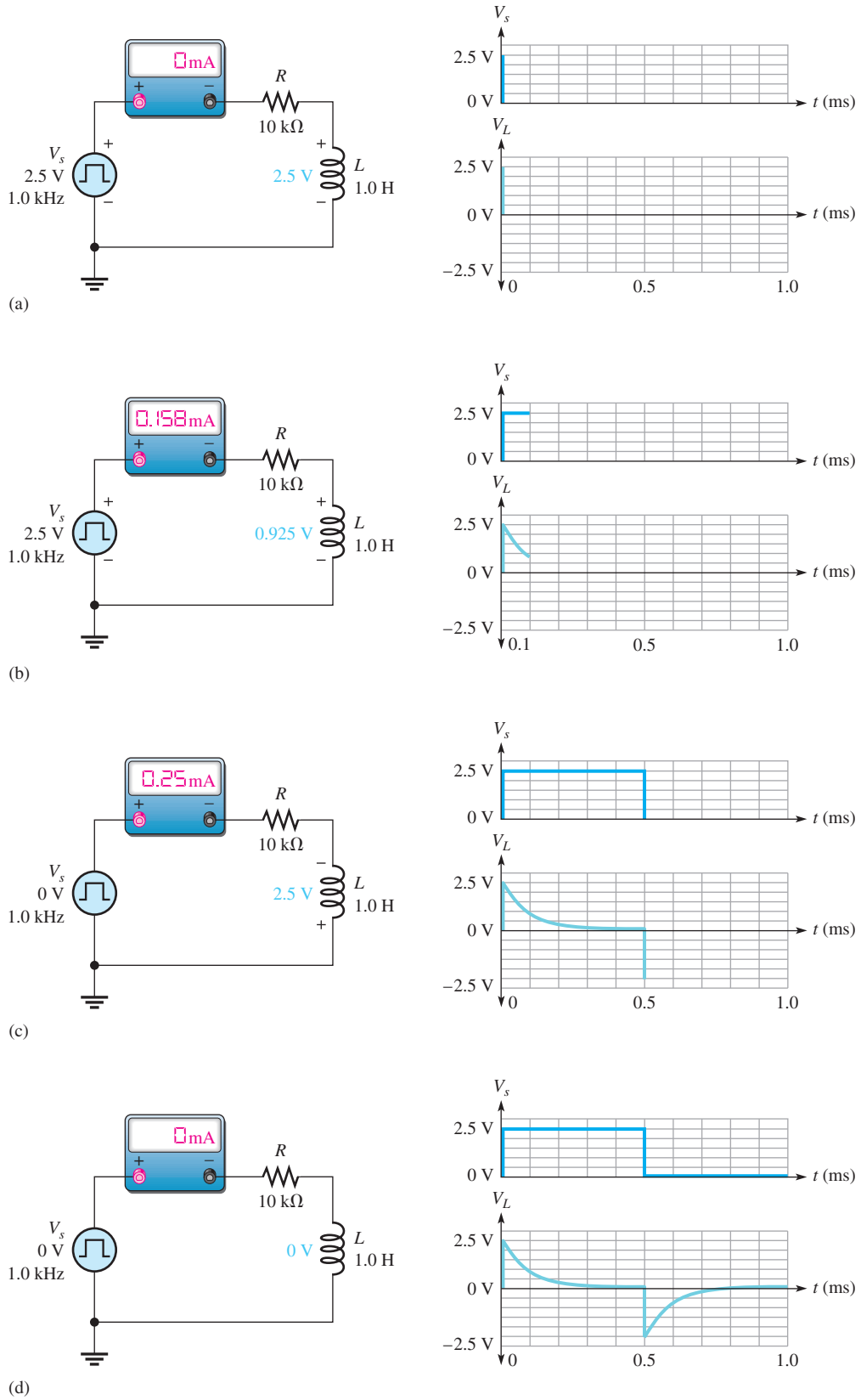

▲ FIGURE 24

www.EngineeringBooksPdf.com

The voltage across the resistor, V_R, in Figure 24(d) is found by subtracting the voltage across the inductor, V_L, from the source voltage, V_s, according to Kirchhoff's voltage law. The shape of the V_R waveform is the same as the current waveform in Figure 23.

EXAMPLE 7

(a) The circuit in Figure 25 has a square wave input. What is the highest frequency that can be used and still observe the complete waveform across the inductor?

(b) Assume the generator is set to the frequency determined in (a). Describe the voltage waveform across the resistor?

▶ FIGURE 25

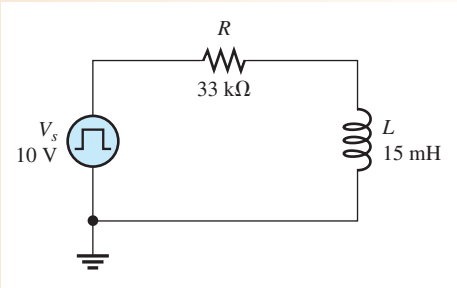

Solution **(a)**

$$\tau = \frac{L}{R} = \frac{15\text{ mH}}{33\text{ k}\Omega} = 0.454\ \mu\text{s}$$

The period needs to be ten times longer than τ to observe the entire wave.

$$T = 10\tau = 4.54\ \mu\text{s}$$

$$f = \frac{1}{T} = \frac{1}{4.54\ \mu\text{s}} = \mathbf{220\ kHz}$$

(b) The voltage across the resistor has the same shape as the current waveform. The general shape was shown in Figure 24 and has a maximum value of 10 V (the same as V_s, assuming no winding resistance).

Related Problem What is the maximum voltage across the resistor for $f = 220$ kHz?

Open Multisim file E11-07. Set the frequency to the calculated value and observe the voltage waveform across the inductor.

The Exponential Formulas

The formulas for the exponential current and voltage in an *RL* circuit are similar to an *RC* circuit, and the universal exponential curves apply to inductors as well as capacitors. The general formulas for *RL* circuits are stated as follows:

$$v = V_F + (V_i - V_F)e^{-Rt/L} \qquad \text{Equation 6}$$

$$i = I_F + (I_i - I_F)e^{-Rt/L} \qquad \text{Equation 7}$$

where V_F and I_F are the final values, V_i and I_i are the initial values, and v and i are the instantaneous values of the inductor voltage or current at time t.

Increasing Current The formula for the special case in which an increasing exponential current curve begins at zero ($I_i = 0$) is

$$i = I_F(1 - e^{-Rt/L}) \qquad \text{Equation 8}$$

www.EngineeringBooksPdf.com

Using Equation 8, you can calculate the value of the increasing inductor current at any instant of time. You can calculate voltage by substituting v for i and V_F for I_F in Equation 8. The exponent $-Rt/L$ can also be written as $-t/(L/R) = -t/\tau$.

EXAMPLE 8

In Figure 26, determine the inductor current 30 μs after the switch is closed.

▶ FIGURE 26

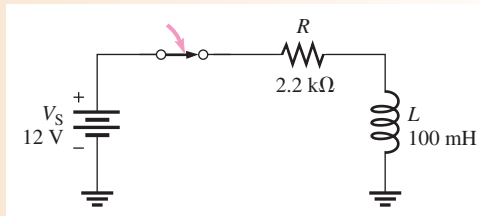

Solution The *RL* time constant is

$$\tau = \frac{L}{R} = \frac{100\text{ mH}}{2.2\text{ k}\Omega} = 45.5\ \mu\text{s}$$

The final current is

$$I_F = \frac{V_S}{R} = \frac{12\text{ V}}{2.2\text{ k}\Omega} = 5.45\text{ mA}$$

The initial current is zero. Notice that 30 μs is less than one time constant, so the current will reach less than 63% of its final value in that time.

$$i_L = I_F(1 - e^{-Rt/L}) = 5.45\text{ mA}(1 - e^{-0.66}) = \mathbf{2.63\ mA}$$

Related Problem In Figure 26, determine the inductor current 55 μs after the switch is closed.

Decreasing Current The formula for the special case in which a decreasing exponential current has a final value of zero is

Equation 9

$$i = I_i e^{-Rt/L}$$

This formula can be used to calculate the decreasing inductor current at any instant.

EXAMPLE 9

In Figure 27, what is the current at each microsecond interval for one complete cycle of the input square wave as shown? After calculating the current at each time, sketch the current waveform.

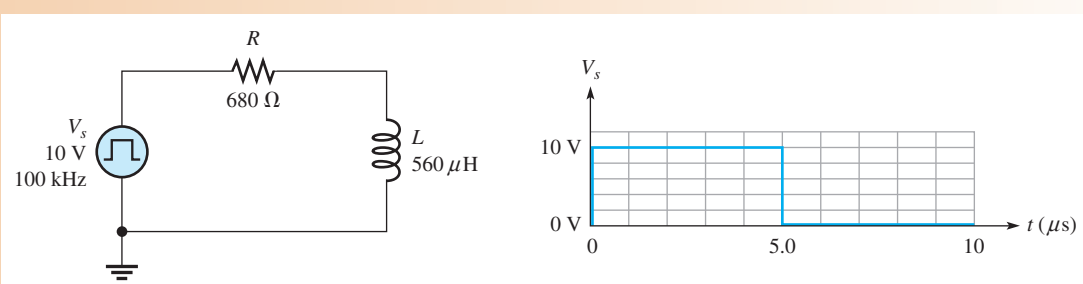

▲ FIGURE 27

www.EngineeringBooksPdf.com

Solution The *RL* time constant is

$$\tau = \frac{L}{R} = \frac{560\ \mu\text{H}}{680\ \Omega} = 0.824\ \mu\text{s}$$

When the pulse goes from 0 V to 10 V at $t = 0$, the current increases exponentially. The final current is

$$I_F = \frac{V_s}{R} = \frac{10\ \text{V}}{680\ \Omega} = 14.7\ \text{mA}$$

For the increasing current, $i = I_F(1 - e^{-Rt/L}) = I_F(1 - e^{-t/\tau})$.

At 1 μs: $i = 14.7\ \text{mA}(1 - e^{-1\mu\text{s}/0.824\mu\text{s}}) = \mathbf{10.3\ mA}$

At 2 μs: $i = 14.7\ \text{mA}(1 - e^{-2\mu\text{s}/0.824\mu\text{s}}) = \mathbf{13.4\ mA}$

At 3 μs: $i = 14.7\ \text{mA}(1 - e^{-3\mu\text{s}/0.824\mu\text{s}}) = \mathbf{14.3\ mA}$

At 4 μs: $i = 14.7\ \text{mA}(1 - e^{-4\mu\text{s}/0.824\mu\text{s}}) = \mathbf{14.6\ mA}$

At 5 μs: $i = 14.7\ \text{mA}(1 - e^{-5\mu\text{s}/0.824\mu\text{s}}) = \mathbf{14.7\ mA}$

When the pulse goes from 10 V to 0 V at $t = 5\ \mu$s, the current decreases exponentially. For the decreasing current,

$$i = I_i(e^{-Rt/L}) = I_i(e^{-t/\tau})$$

The initial current is the value at 5 μs, which is 14.7 mA.

At 6 μs: $i = 14.7\ \text{mA}(e^{-1\mu\text{s}/0.824\mu\text{s}}) = \mathbf{4.37\ mA}$

At 7 μs: $i = 14.7\ \text{mA}(e^{-2\mu\text{s}/0.824\mu\text{s}}) = \mathbf{1.30\ mA}$

At 8 μs: $i = 14.7\ \text{mA}(e^{-3\mu\text{s}/0.824\mu\text{s}}) = \mathbf{0.38\ mA}$

At 9 μs: $i = 14.7\ \text{mA}(e^{-4\mu\text{s}/0.824\mu\text{s}}) = \mathbf{0.11\ mA}$

At 10 μs: $i = 14.7\ \text{mA}(e^{-5\mu\text{s}/0.824\mu\text{s}}) = \mathbf{0.03\ mA}$

Figure 28 is a graph of these results.

▶ **FIGURE 28**

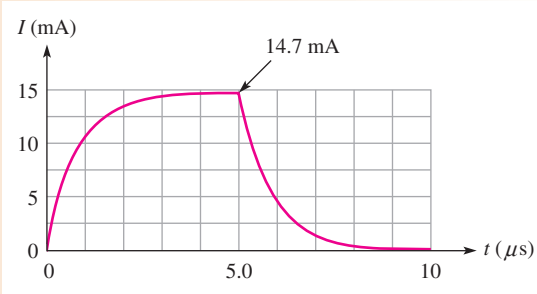

Related Problem What is the current at 0.5 μs?

Open Multisim file E11-09. Measure the current by placing a very small-value series resistor between the inductor and ground and observing the voltage across it.

SECTION 4 CHECKUP

1. A 15 mH inductor with a winding resistance of 10 Ω has a constant direct current of 10 mA through it. What is the voltage drop across the inductor?
2. A 20 V dc source is connected to a series *RL* circuit with a switch. At the instant of switch closure, what are the values of i and v_L?

www.EngineeringBooksPdf.com

3. In the same circuit as in Question 2, after a time interval equal to 5τ from switch closure, what is v_L?
4. In a series RL circuit where $R = 1.0\ \text{k}\Omega$ and $L = 500\ \mu\text{H}$, what is the time constant? Determine the current 0.25 μs after a switch connects 10 V across the circuit.

5 INDUCTORS IN AC CIRCUITS

An inductor passes ac but with an amount of opposition that depends on the frequency of the ac.

After completing this section, you should be able to

- **Analyze inductive ac circuits**
  - Define *inductive reactance*
  - Determine the value of inductive reactance in a given circuit
  - Discuss instantaneous, true, and reactive power in an inductor

Inductive Reactance, X_L

In Figure 29, an inductor is shown connected to a sinusoidal voltage source. When the source voltage is held at a constant amplitude value and its frequency is increased, the amplitude of the current decreases. Also, when the frequency of the source is decreased, the current amplitude increases.

▶ FIGURE 29

The current in an inductive circuit varies inversely with the frequency of the source voltage.

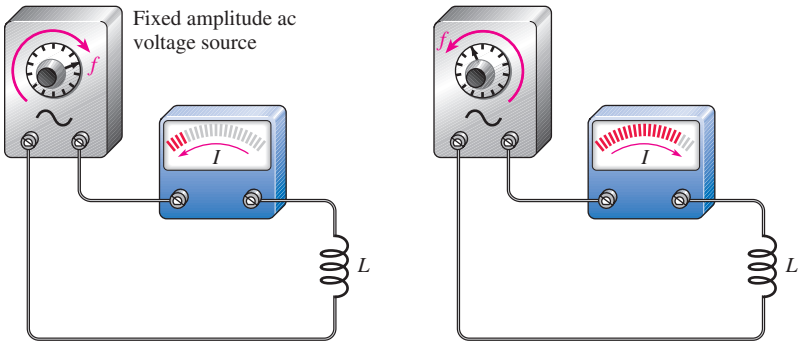

(a) Current decreases when the frequency increases.

(b) Current increases when the frequency decreases.

When the frequency of the source voltage increases, its rate of change also increases, as you already know. Now, if the frequency of the source voltage is increased, the frequency of the current also increases. According to Faraday's and Lenz's laws, this increase in frequency induces more voltage across the inductor in a direction to oppose the current and causes it to decrease in amplitude. Similarly, a decrease in frequency will cause an increase in current.

A decrease in the amount of current with an increase in frequency for a fixed amount of voltage indicates that opposition to the current has increased. Thus, the inductor offers opposition to current, and that opposition varies *directly* with frequency.

Inductive reactance is the opposition to sinusoidal current in an inductor.

The symbol for inductive reactance is X_L, and its unit is the ohm (Ω).

www.EngineeringBooksPdf.com

You have just seen how frequency affects the opposition to current (inductive reactance) in an inductor. Now let's see how the inductance, L, affects the reactance. Figure 30(a) shows that when a sinusoidal voltage with a fixed amplitude and fixed frequency is applied to a 1 mH inductor, there is a certain amount of alternating current. When the inductance value is increased to 2 mH, the current decreases, as shown in part (b). Thus, when the inductance is increased, the opposition to current (inductive reactance) increases. So not only is the inductive reactance *directly* proportional to frequency, but it is also *directly* proportional to inductance. This relationship can be stated as follows:

X_L is proportional to fL.

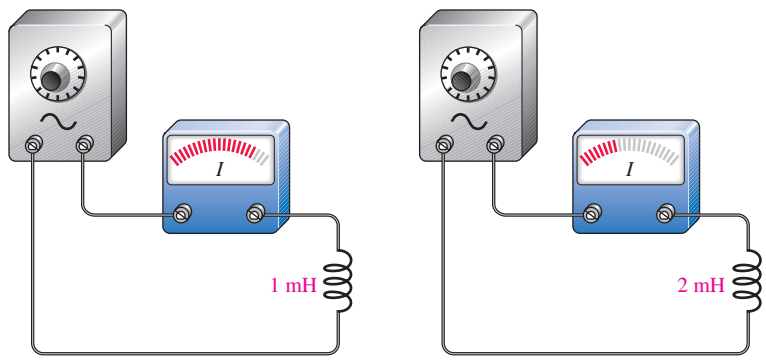

(a) Less inductance, more current. (b) More inductance, less current.

▲ FIGURE 30

For a fixed voltage and fixed frequency, the current varies inversely with the inductance value.

It can be proven that the constant of proportionality is 2π, so the formula for inductive reactance (X_L) is

$$X_L = 2\pi fL \qquad \text{Equation 10}$$

X_L is in ohms when f is in hertz and L is in henries. As with capacitive reactance, the 2π term comes from the relationship of the sine wave to rotational motion.

EXAMPLE 10

A sinusoidal voltage is applied to the circuit in Figure 31. The frequency is 10 kHz. Determine the inductive reactance.

▶ FIGURE 31

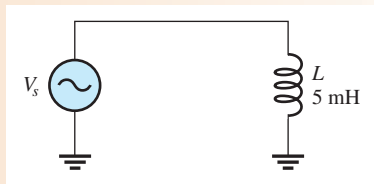

Solution Convert 10 kHz to 10×10^3 Hz and 5 mH to 5×10^{-3} H. Then, the inductive reactance is

$$X_L = 2\pi fL = 2\pi(10 \times 10^3\ \text{Hz})(5 \times 10^{-3}\ \text{H}) = \mathbf{314\ \Omega}$$

Related Problem What is X_L in Figure 31 if the frequency is increased to 35 kHz?

www.EngineeringBooksPdf.com

Reactance for Series Inductors

As given in Equation 3, the total inductance of series inductors is the sum of the individual inductances. Because reactance is directly proportional to the inductance, the total reactance of series inductors is the sum of the individual reactances.

Equation 11

$$X_{L(tot)} = X_{L1} + X_{L2} + X_{L3} + \cdots + X_{Ln}$$

Notice that Equation 11 has the same form as Equation 3. It also has the same form as the formulas for finding the total opposition to current such as the total resistance of series resistors or the total reactance of series capacitors. When combining the resistance or reactance of the same type of component in series (resistors, inductors, or capacitors), you simply add the individual oppositions to obtain the total.

Reactance for Parallel Inductors

In an ac circuit with parallel inductors, Equation 4 was given to find the total inductance. It stated that the total inductance is the reciprocal of the sum of the reciprocals of the inductors. Likewise, the total inductive reactance is the reciprocal of the sum of the reciprocals of the individual reactances.

Equation 12

$$X_{L(tot)} = \frac{1}{\dfrac{1}{X_{L1}} + \dfrac{1}{X_{L2}} + \dfrac{1}{X_{L3}} + \cdots + \dfrac{1}{X_{Ln}}}$$

Notice that Equation 12 has the same form as Equation 4. It also has the same form as the formulas for finding the total resistance of parallel resistors or the total reactance of parallel capacitors. When combining the resistance or reactance of the same type of component in parallel (resistors, inductors, or capacitors), you take the reciprocal of the sum of the reciprocals to obtain the total opposition.

For two inductors in parallel, Equation 12 can be reduced to the product-over-sum form.

$$X_{L(tot)} = \frac{X_{L1}X_{L2}}{X_{L1} + X_{L2}}$$

EXAMPLE 11 What is the total inductive reactance of each circuit of Figure 32?

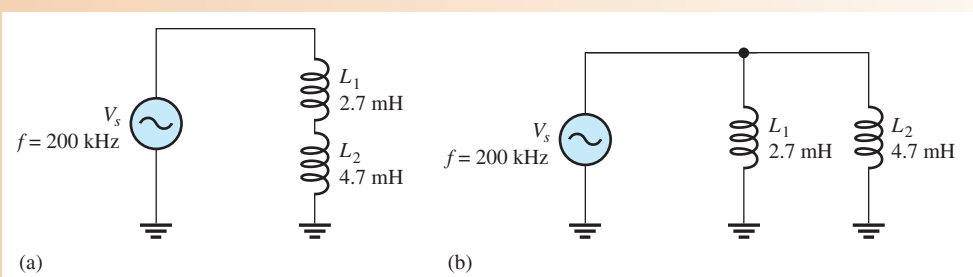

▲ FIGURE 32

Solution The reactances of the individual inductors are the same in both circuits.

$$X_{L1} = 2\pi f L_1 = 2\pi(200\text{ kHz})(2.7\text{ mH}) = 3.39\text{ k}\Omega$$
$$X_{L2} = 2\pi f L_2 = 2\pi(200\text{ kHz})(4.7\text{ mH}) = 5.91\text{ k}\Omega$$

www.EngineeringBooksPdf.com

For the series inductors in Figure 32(a), the total reactance is the sum of X_{L1} and X_{L2}, as given in Equation 11.

$$X_{L(tot)} = X_{L1} + X_{L2} = 3.39\ \text{k}\Omega + 5.91\ \text{k}\Omega = \mathbf{9.30\ k\Omega}$$

For the inductors in parallel in Figure 32(b), determine the total reactance from the product-over-sum rule using X_{L1} and X_{L2}.

$$X_{L(tot)} = \frac{X_{L1}X_{L2}}{X_{L1} + X_{L2}} = \frac{(3.39\ \text{k}\Omega)(5.91\ \text{k}\Omega)}{3.39\ \text{k}\Omega + 5.91\ \text{k}\Omega} = \mathbf{2.15\ k\Omega}$$

You can also obtain the total reactance for either series or parallel inductors by first finding the total inductance and then substituting in Equation 10 to find the total reactance.

For the series inductors,

$$L_T = L_1 + L_2 = 2.7\ \text{mH} + 4.7\ \text{mH} = 7.4\ \text{mH}$$
$$X_{L(tot)} = 2\pi f L_T = 2\pi(200\ \text{kHz})(7.4\ \text{mH}) = \mathbf{9.30\ k\Omega}$$

For the parallel inductors,

$$L_T = \frac{L_1L_2}{L_1 + L_2} = \frac{(2.7\ \text{mH})(4.7\ \text{mH})}{2.7\ \text{mH} + 4.7\ \text{mH}} = 1.71\ \text{mH}$$
$$X_{L(tot)} = 2\pi f L_T = 2\pi(200\ \text{kHz})(1.71\ \text{mH}) = \mathbf{2.15\ k\Omega}$$

Related Problem What is the total inductive reactance for each circuit in Figure 32 if $L_1 = 1$ mH and L_2 is uncharged?

Ohm's Law The reactance of an inductor is analogous to the resistance of a resistor. In fact, X_L, just like X_C and R, is expressed in ohms. Since inductive reactance is a form of opposition to current, Ohm's law applies to inductive circuits as well as to resistive circuits and capacitive circuits; and it is stated as follows:

$$I = \frac{V}{X_L} \qquad \text{Equation 13}$$

When applying Ohm's law in ac circuits, you must express both the current and the voltage in the same way, that is, both in rms, both in peak, and so on.

EXAMPLE 12 Determine the rms current in Figure 33.

▶ FIGURE 33

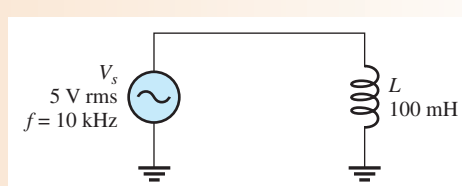

Solution Convert 10 kHz to 10×10^3 Hz and 100 mH to 100×10^{-3} H. Then calculate X_L.

$$X_L = 2\pi f L = 2\pi(10 \times 10^3\ \text{Hz})(100 \times 10^{-3}\ \text{H}) = 6283\ \Omega$$

www.EngineeringBooksPdf.com

Apply Ohm's law.

$$I_{rms} = \frac{V_{rms}}{X_L} = \frac{5\text{ V}}{6283\ \Omega} = \mathbf{796\ \mu A}$$

Related Problem Determine the rms current in Figure 33 for the following values: $V_{rms} = 12$ V, $f = 4.9$ kHz, and $L = 680\ \mu$H.

Open Multisim file E11-12. Measure the rms current and compare to the calculated value. Change the circuit values to those given in the related problem and measure the rms current.

Current Lags Inductor Voltage by 90°

As you know, a sinusoidal voltage has a maximum rate of change at its zero crossings and a zero rate of change at the peaks. From Faraday's law you know that the amount of voltage induced across a coil is directly proportional to the rate at which the current is changing. Therefore, the coil voltage is maximum at the zero crossings of the current where the rate of change of the current is the greatest. Also, the amount of voltage is zero at the peaks of the current where the rate of change is zero. This phase relationship is illustrated in Figure 34. As you can see, the current peaks occur a quarter cycle after the voltage peaks. Thus, the current *lags* the voltage by 90°. Recall that in a capacitor, the current *leads* the voltage by 90°.

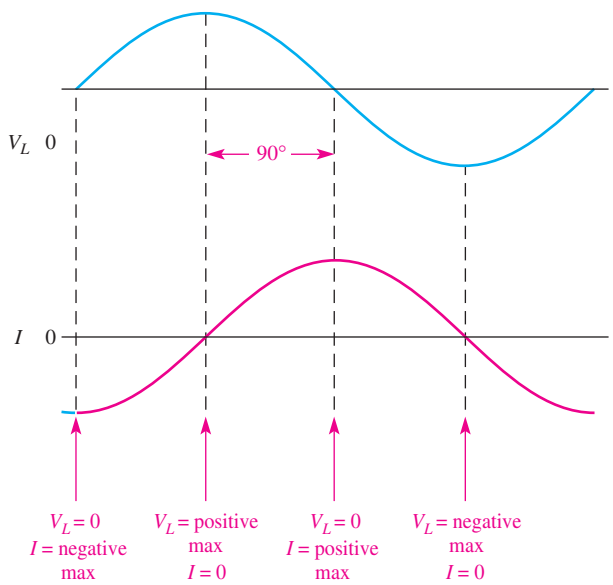

▲ FIGURE 34

Current is always lagging the inductor voltage by 90°.

Power in an Inductor

As discussed earlier, an inductor stores energy in its magnetic field when there is current through it. An ideal inductor (assuming no winding resistance) does not dissipate energy; it only stores it. When an ac voltage is applied to an inductor, energy is stored by the

www.EngineeringBooksPdf.com

inductor during a portion of the cycle; then the stored energy is returned to the source during another portion of the cycle. No net energy is lost in an ideal inductor due to conversion to heat. Figure 35 shows the power curve that results from one cycle of inductor current and voltage. Compare the power curve for an inductor with that of a capacitor. The main difference is that voltage and current are interchanged between the plots.

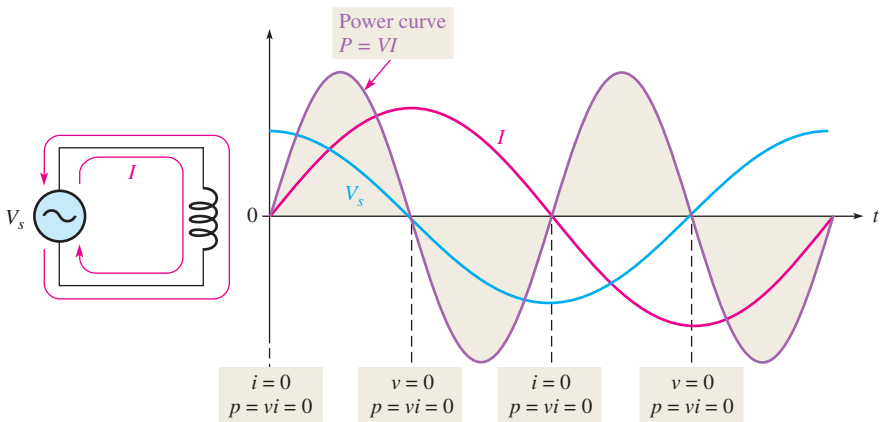

▲ FIGURE 35

Power curve for an inductor.

Instantaneous Power (p) The product of instantaneous voltage, v, and instantaneous current, i, gives instantaneous power, p. At points where v or i is zero, p is also zero. When both v and i are positive, p is also positive. When either v or i is positive and the other negative, p is negative. When both v and i are negative, p is positive. As you can see in Figure 35, the power follows a sinusoidal-shaped curve. Positive values of power indicate that energy is stored by the inductor. Negative values of power indicate that energy is returned from the inductor to the source. Note that the power fluctuates at a frequency twice that of the voltage or current, as energy is alternately stored and returned to the source.

True Power (P_{true}) Ideally, all of the energy stored by an inductor during the positive portion of the power cycle is returned to the source during the negative portion. No net energy is lost due to conversion to heat in the inductor, so the power is zero. Actually, because of winding resistance in a practical inductor, some power is always dissipated, and there is a very small amount of true power, which can normally be neglected.

$$P_{\text{true}} = I_{\text{rms}}^2 R_W \qquad \text{Equation 14}$$

Reactive Power (P_r) The rate at which an inductor stores or returns energy is called its **reactive power**, P_r, with a unit of VAR (volt-ampere reactive). The reactive power is a nonzero quantity because at any instant in time the inductor is actually taking energy from the source or returning energy to it. Reactive power does not represent an energy loss due to conversion to heat. The following formulas apply:

$$P_r = V_{\text{rms}} I_{\text{rms}} \qquad \text{Equation 15}$$

$$P_r = \frac{V_{\text{rms}}^2}{X_L} \qquad \text{Equation 16}$$

$$P_r = I_{\text{rms}}^2 X_L \qquad \text{Equation 17}$$

www.EngineeringBooksPdf.com

EXAMPLE 13

A 10 V rms signal with a frequency of 10 kHz is applied to a 10 mH coil with a winding resistance of 5 Ω. Determine the reactive power (P_r) and the true power (P_{true}).

Solution First, calculate the inductive reactance and current values.

$$X_L = 2\pi fL = 2\pi(10\text{ kHz})(10\text{ mH}) = 628\ \Omega$$

$$I = \frac{V_s}{X_L} = \frac{10\text{ V}}{628\ \Omega} = 15.9\text{ mA}$$

Then using Equation 17,

$$P_r = I^2X_L = (15.9\text{ mA})^2(628\ \Omega) = \mathbf{159\ mVAR}$$

The true power is

$$P_{true} = I^2R_W = (15.9\text{ mA})^2(5\ \Omega) = \mathbf{1.26\ mW}$$

Related Problem What happens to the reactive power if the frequency increases?

The Quality Factor (*Q*)

The **quality factor (*Q*)** is the ratio of the reactive power in the inductor to the true power in the winding resistance of the coil. It is a ratio of the power in L to the power in R_W. The quality factor is important in resonant circuits. A formula for Q is developed as follows:

$$Q = \frac{\text{reactive power}}{\text{true power}} = \frac{P_r}{P_{true}} = \frac{I^2X_L}{I^2R_W}$$

The I^2 terms cancel, leaving

Equation 18

$$Q = \frac{X_L}{R_W}$$

Note that Q is a ratio of like units and, therefore, has no unit itself. The quality factor is also known as unloaded Q because it is defined with no load across the coil. Notice also that Q depends on the frequency because X_L is dependent on frequency.

SECTION 5 CHECKUP

1. State the phase relationship between current and voltage in an inductor.
2. Calculate X_L for $f = 5$ kHz and $L = 100$ mH.
3. At what frequency is the reactance of a 50 μH inductor equal to 800 Ω?
4. Calculate the rms current in Figure 36.
5. An ideal 50 mH inductor is connected to a 12 V rms source. What is the true power? What is the reactive power at a frequency of 1 kHz?

▶ FIGURE 36

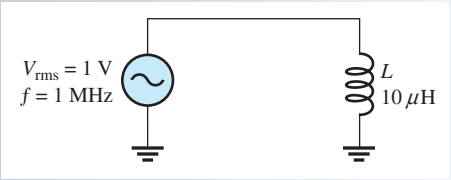

www.EngineeringBooksPdf.com

6 INDUCTOR APPLICATIONS

Inductors are not as versatile as capacitors and tend to be more limited in their application due, in part, to size, cost factors, and nonideal behavior (internal resistance, etc.). One of the most common applications for inductors is noise reduction applications.

After completing this section, you should be able to

- **Discuss some inductor applications**
  - Discuss two ways in which noise enters a circuit
  - Describe the suppression of electromagnetic interference (EMI)
  - Explain how a ferrite bead is used
  - Discuss the basics of tuned circuits

Noise Suppression

One of the most important applications of inductors has to do with suppressing unwanted electrical noise. The inductors used in these applications are generally wound on a closed core to avoid having the inductor become a source of radiated noise itself. Two types of noise are conductive noise and radiated noise.

Conductive Noise Many systems have common conductive paths connecting different parts of the system, which can conduct high frequency noise from one part of the system to another. Consider the case of two circuits connected with common lines as shown in Figure 37(a). A path for high frequency noise exists though the common grounds, creating a condition known as a *ground loop*. Ground loops are particularly a problem in instrumentation systems, where a transducer may be located a distance from the recording system and noise current in the ground can affect the signal.

If the signal of interest changes slowly, a special inductor, called a *longitudinal choke,* can be installed in the signal line as shown in Figure 37(b). The longitudinal choke is a form of transformer that acts as an inductor in each signal line. The ground loop sees a high impedance path, thus reducing the noise, while the low-frequency signal is coupled through the low impedance of the choke.

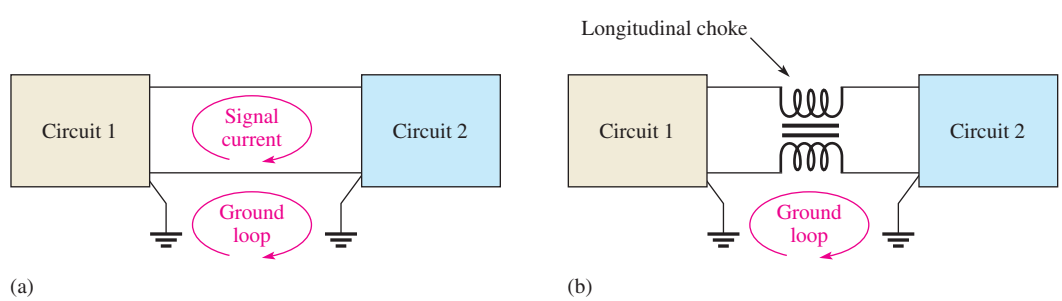

▲ FIGURE 37

Switching circuits also tend to generate high-frequency noise (above 10 MHz) by virtue of the high-frequency components present. (Recall that a fast pulse contains many high-frequency harmonics.) Certain types of power supplies use high-speed

www.EngineeringBooksPdf.com

switching circuits, which are a source of both conductive and radiated noise. Because an inductor's impedance increases with frequency, inductors are good for blocking electrical noise from these supplies, which should carry only dc. Inductors are frequently installed in the power supply lines to suppress this conductive noise so that one circuit does not adversely affect another circuit. One or more capacitors may also be used in conjunction with the inductor to improve filtering action.

Radiated Noise Noise can also enter a circuit by way of an electromagnetic field. The noise source can be an adjacent circuit or a nearby power supply. There are several approaches to reducing the effects of radiated noise. Usually, the first step is to determine the cause of the noise and isolate it using shielding or filtering. Inductors are widely used in filters that are used to suppress radio-frequency noise. The inductor used for noise suppression must be carefully selected so as not to become a source of radiated noise itself. For high frequencies (>20 MHz), inductors wound on highly permeable toroidal cores are widely used, as they tend to keep the magnetic flux restricted to the core.

RF Chokes

Inductors used for the purpose of blocking very high frequencies are called *radio frequency (RF) chokes*. RF chokes are used for conductive or radiated noise. They are special inductors designed to block high frequencies from getting into or leaving parts of a system by providing a high impedance path for high frequencies. In general, the choke is placed in series with the line for which RF suppression is required. Depending on the frequency of the interference, different types of chokes are required. A common type of electromagnetic interference (EMI) filter wraps the signal line on a toroidal core several times. The toroidal configuration is desired because it contains the magnetic field so that the choke does not become a source of noise itself.

Another common type of RF choke is a ferrite bead. All wires have inductance, and the ferrite bead is a small ferromagnetic material that is strung onto the wire to increase its inductance. The impedance presented by the bead is a function of both the material and the frequency, as well as the size of the bead. It is an effective and inexpensive "choke" for high frequencies. Ferrite beads are common in high-frequency communication systems. Sometimes several are strung together in series to increase the effective inductance.

Tuned Circuits

Inductors are used in conjunction with capacitors to provide frequency selection in communications systems. These tuned circuits allow a narrow band of frequencies to be selected while all other frequencies are rejected. The tuners in your TV and radio receivers are based on this principle and permit you to select one channel or station out of the many that are available.

Frequency selectivity is based on the fact that the reactances of both capacitors and inductors depend on the frequency and on the interaction of these two components when connected in series or parallel. Since the capacitor and the inductor produce opposite phase shifts, their combined opposition to current can be used to obtain a desired response at a selected frequency.

SECTION 6 CHECKUP

1. Name two types of unwanted noise.
2. What do the letters EMI stand for?
3. How is a ferrite bead used?

www.EngineeringBooksPdf.com

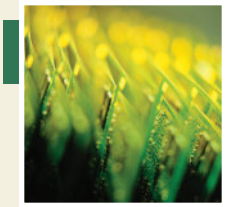

Application Assignment

PUTTING YOUR KNOWLEDGE TO WORK

You are given two unmarked coils and asked to find their inductance values. You cannot find an inductance bridge, which is an instrument for measuring inductance directly. After scratching your head for awhile, you decide to use the time-constant characteristic of inductive circuits to determine the unknown inductances. A test setup consisting of a square wave generator and an oscilloscope is used to make the measurements.

The method is to place the coil in series with a resistor of known value and measure the time constant by applying a square wave to the circuit and observing the resulting voltage across the resistor with an oscilloscope. Knowing the time constant and the resistance value, you can calculate the inductance L.

Each time the square wave input voltage goes high, the inductor current increases exponentially; and each time the square wave goes back to zero, the inductor current decreases exponentially. The time it takes for the exponential resistor voltage to increase to approximately its final value equals five time constants. This operation is illustrated in Figure 38. To make sure that the winding resistance of the coil can be neglected, it must be measured; and the value of the resistor used in the circuit must be selected to be considerably larger than the winding and source resistance.

Step 1: Measuring the Coil Resistance and Selecting a Series Resistor

Assume that the winding resistance has been measured with an ohmmeter and found to be 85 Ω. To make the winding resistance negligible, a 10 kΩ series resistor is used in the circuit.

Step 2: Determining the Inductance of Coil 1

Refer to Figure 39. To determine the inductance, a 10 V square wave is applied to the breadboarded circuit. The frequency of the square wave is adjusted so that the inductor current has time

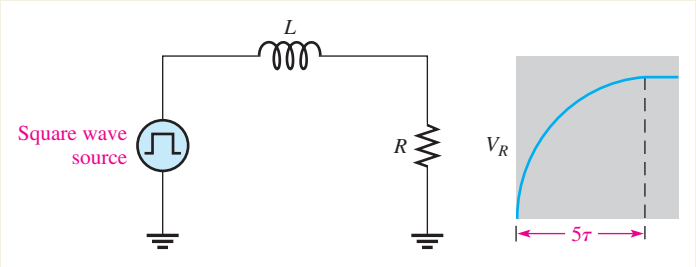

▲ FIGURE 38

Circuit for time-constant measurement.

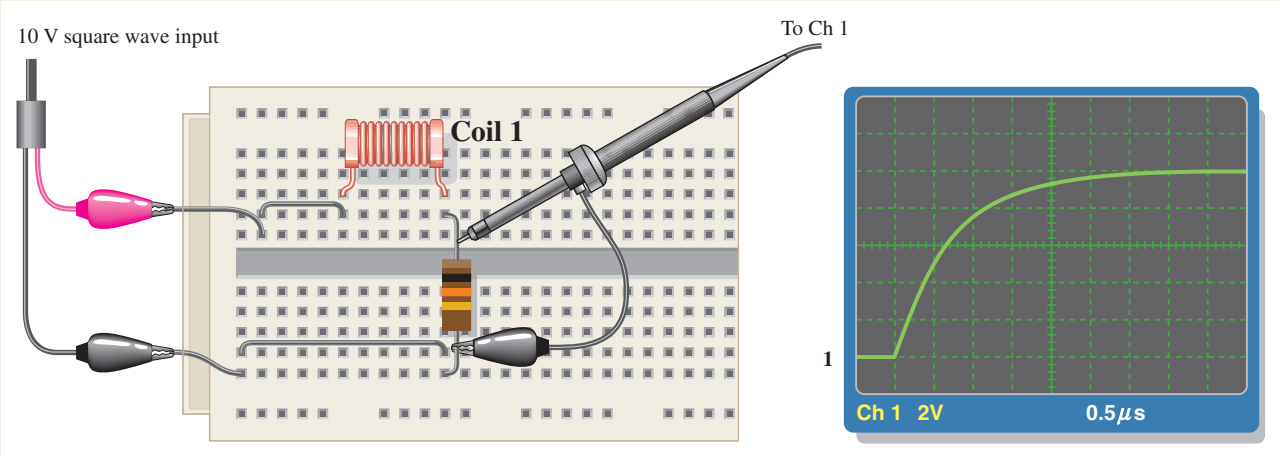

▲ FIGURE 39

Testing coil 1.

www.EngineeringBooksPdf.com

to reach its final value during each square wave pulse; the scope is set to view a complete exponential curve as shown. Determine the approximate circuit time constant from the scope display and calculate the inductance of coil 1.

Step 3: Determining the Inductance of Coil 2

Refer to Figure 40. To determine the inductance, a 10 V square wave is applied to the breadboarded circuit. The frequency of the square wave is adjusted so that the inductor current has time to reach its final value during each square wave pulse; the scope is set to view a complete exponential curve as shown. Determine the approximate circuit time constant from the scope display and calculate the inductance of coil 2. Discuss any difficulty you find with this method.

Step 4: Another Way to Find Unknown Inductance

Determination of the time constant is not the only way that you can use to find an unknown inductance. Specify a method using a sinusoidal input voltage instead of the square wave.

Multisim Analysis

Open your Multisim software. Connect the *RL* circuit using the value of the resistance shown and the value of the inductance determined in Step 2. Verify the time constant by measurement. Repeat for the inductance determined in Step 3.

Review

1. What is the maximum square wave frequency that can be used in Figure 39?
2. What is the maximum square wave frequency that can be used in Figure 40?
3. What happens if the frequency exceeds the maximum you determined in Questions 1 and 2? Explain how your measurements would be affected.

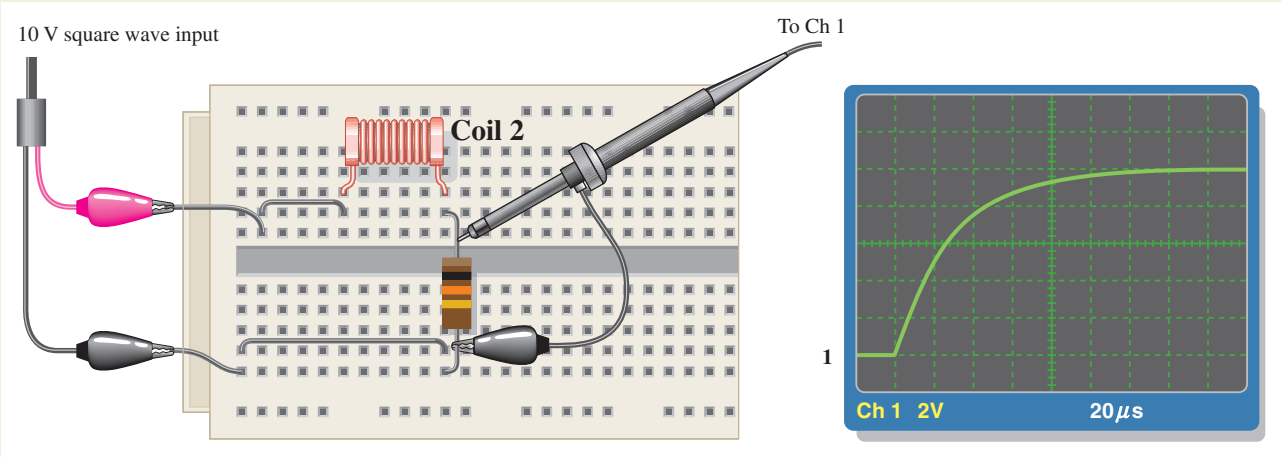

▲ FIGURE 40

Testing coil 2.

SUMMARY

- Inductance is a measure of a coil's ability to establish an induced voltage as a result of a change in its current.
- An inductor opposes a change in its own current.
- Faraday's law states that relative motion between a magnetic field and a coil induces a voltage across the coil.
- Lenz's law states that the polarity of induced voltage is such that the resulting induced current is in a direction that opposes the change in the magnetic field that produced it.
- Energy is stored by an inductor in its magnetic field.
- One henry is the amount of inductance when current, changing at the rate of one ampere per second, induces one volt across the inductor.

www.EngineeringBooksPdf.com

- Inductance is directly proportional to the square of the turns, the permeability, and the cross-sectional area of the core. It is inversely proportional to the length of the core.
- The permeability of a core material is an indication of the ability of the material to establish a magnetic field.
- Inductors add in series.
- Total parallel inductance is less than that of the smallest inductor in parallel.
- The time constant for a series *RL* circuit is the inductance divided by the resistance.
- In an *RL* circuit, the increasing or decreasing voltage and current in an inductor make an approximately 63% change during each time-constant interval.
- Increasing and decreasing current and voltage follow exponential curves.
- Voltage leads current by 90° in an inductor.
- Inductive reactance (X_L) is directly proportional to frequency and inductance.
- The true power in an inductor is zero; that is, there is no energy conversion to heat in an ideal inductor, only in its winding resistance.

KEY TERMS

Coil A common term for an inductor.

Henry (H) The unit of inductance.

Induced voltage Voltage produced as a result of a changing magnetic field.

Inductance The property of an inductor whereby a change in current causes the inductor to produce a voltage that opposes the change in current.

Inductive reactance The opposition of an inductor to sinusoidal current. The unit is the ohm.

Inductor A passive electrical component, formed by a coil of wire, that exhibits the property of inductance.

Quality factor (*Q*) The ratio of reactive power to true power.

***RL* time constant** A fixed time interval, set by the *L* and *R* values, that determines the time response of a circuit.

Winding The loops or turns of wire in an inductor.

Winding resistance The resistance of the length of wire that makes up a coil.

FORMULAS

1	$W = \frac{1}{2}LI^2$	Energy stored by an inductor
2	$L = \frac{N^2\mu A}{l}$	Inductance in terms of physical parameters
3	$L_T = L_1 + L_2 + L_3 + \cdots + L_n$	Series inductance
4	$L_T = \frac{1}{\frac{1}{L_1} + \frac{1}{L_2} + \frac{1}{L_3} + \cdots + \frac{1}{L_n}}$	Total parallel inductance
5	$\tau = \frac{L}{R}$	*RL* time constant
6	$v = V_F + (V_i - V_F)e^{-Rt/L}$	Exponential voltage (general)
7	$i = I_F + (I_i - I_F)e^{-Rt/L}$	Exponential current (general)
8	$i = I_F(1 - e^{-Rt/L})$	Increasing exponential current beginning at zero
9	$i = I_i e^{-Rt/L}$	Decreasing exponential current ending at zero

www.EngineeringBooksPdf.com

10	$X_L = 2\pi fL$	Inductive reactance
11	$X_{L(tot)} = X_{L1} + X_{L2} + X_{L3} + \cdots + X_{Ln}$	Series inductive reactance
12	$X_{L(tot)} = \dfrac{1}{\dfrac{1}{X_{L1}} + \dfrac{1}{X_{L2}} + \dfrac{1}{X_{L3}} + \cdots + \dfrac{1}{X_{Ln}}}$	Parallel inductive reactance
13	$I = \dfrac{V}{X_L}$	Ohm's law
14	$P_{\text{true}} = I_{\text{rms}}^2 R_W$	True power
15	$P_r = V_{\text{rms}} I_{\text{rms}}$	Reactive power
16	$P_r = \dfrac{V_{\text{rms}}^2}{X_L}$	Reactive power
17	$P_r = I_{\text{rms}}^2 X_L$	Reactive power
18	$Q = \dfrac{X_L}{R_W}$	Quality factor

TRUE/FALSE QUIZ

Answers are at the end of the chapter.

1. Lenz's law states that the amount of voltage induced in a coil is proportional to the rate of change of the magnetic field with respect to the coil.
2. An ideal inductor has no winding resistance.
3. The total inductance of two parallel inductors is equal to the product-over-sum of the individual inductors.
4. The total inductance of parallel inductors is always less than that of the smallest inductor.
5. The time constant of an *RL* circuit is given by the formula $\tau = R/L$.
6. If a series *RL* circuit is connected to a dc source, the maximum current is limited by the total inductance.
7. Kirchhoff's voltage law does not apply to inductive circuits.
8. Inductive reactance is directly proportional to the frequency.
9. In an ac inductive circuit, the current lags the voltage in the inductor.
10. The frequency of the power curve for an inductive circuit is equal to the frequency of the applied voltage.

SELF-TEST

Answers are at the end of the chapter.

1. An inductance of 0.05 μH is larger than
   (a) 0.0000005 H **(b)** 0.000005 H **(c)** 0.000000008 H **(d)** 0.00005 mH
2. An inductance of 0.33 mH is smaller than
   (a) 33 μH **(b)** 330 μH **(c)** 0.05 mH **(d)** 0.0005 H
3. When the current through an inductor increases, the amount of energy stored in the electromagnetic field
   (a) decreases **(b)** remains constant **(c)** increases **(d)** doubles
4. When the current through an inductor doubles, the stored energy
   (a) doubles **(b)** quadruples **(c)** is halved **(d)** does not change
5. The winding resistance of a coil can be decreased by
   (a) reducing the number of turns **(b)** using a larger wire
   (c) changing the core material **(d)** either answer (a) or (b)

www.EngineeringBooksPdf.com

6. The inductance of an iron-core coil increases if
   (a) the number of turns is increased **(b)** the iron core is removed
   (c) the length of the core is increased **(d)** larger wire is used
7. Four 10 mH inductors are in series. The total inductance is
   (a) 40 mH **(b)** 2.5 mH **(c)** 40,000 μH **(d)** answers (a) and (c)
8. A 1 mH, a 3.3 mH, and a 0.1 mH inductor are connected in parallel. The total inductance is
   (a) 4.4 mH **(b)** greater than 3.3 mH **(c)** less than 0.1 mH **(d)** answers (a) and (b)
9. An inductor, a resistor, and a switch are connected in series to a 12 V battery. At the instant the switch is closed, the inductor voltage is
   (a) 0 V **(b)** 12 V **(c)** 6 V **(d)** 4 V
10. A sinusoidal voltage is applied across an inductor. When the frequency of the voltage is increased, the current
    (a) decreases **(b)** increases **(c)** does not change **(d)** momentarily goes to zero
11. An inductor and a resistor are in series with a sinusoidal voltage source. The frequency is set so that the inductive reactance is equal to the resistance. If the frequency is increased, then
    (a) $V_R > V_L$ **(b)** $V_L < V_R$ **(c)** $V_L = V_R$ **(d)** $V_L > V_R$

TROUBLESHOOTING: SYMPTOM AND CAUSE

The purpose of these exercises is to help develop thought processes essential to troubleshooting. Answers are at the end of the chapter.

Determine the cause for each set of symptoms. Refer to Figure 41.

1. *Symptom:* All of the voltmeter readings are 0 V.
   Cause:
   (a) The source is off or faulty.
   (b) L_1 is open.
   (c) either (a) or (b)

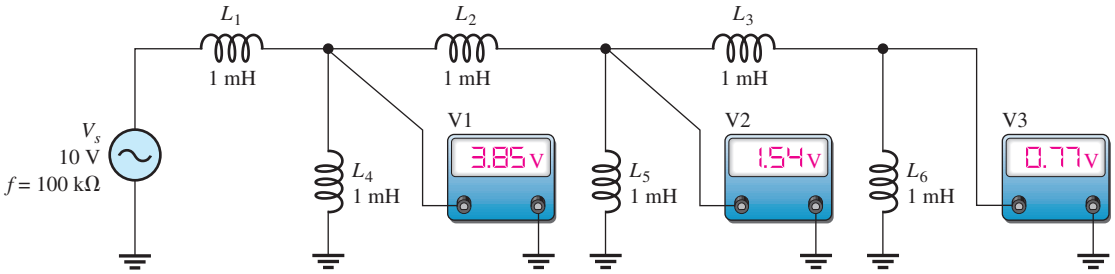

▲ **FIGURE 41**

The ac meters indicate the correct readings for this circuit.

2. *Symptom:* All of the voltmeter readings are 0 V.
   Cause:
   (a) L_4 is completely shorted.
   (b) L_5 is completely shorted.
   (c) L_6 is completely shorted.
3. *Symptom:* The voltmeter 1 reading is 5 V, and the voltmeter 2 and voltmeter 3 readings are 0 V.
   Cause:
   (a) L_4 is open.
   (b) L_2 is open.
   (c) L_5 is shorted.

www.EngineeringBooksPdf.com

4. *Symptom:* The voltmeter 1 reading is 4 V, the voltmeter 2 reading is 2 V, and the voltmeter 3 reading is 0 V.

   Cause:

   (a) L_3 is open.

   (b) L_6 is shorted.

   (c) either (a) or (b)

5. *Symptom:* The voltmeter 1 reading is 4 V, the voltmeter 2 reading is 2 V, and the voltmeter 3 reading is 2 V.

   Cause:

   (a) L_3 is shorted.

   (b) L_6 is open.

   (c) either (a) or (b)

PROBLEMS

Answers to odd-numbered problems are at the end of the chapter.

BASIC PROBLEMS

SECTION 1 The Basic Inductor

1. Convert the following to millihenries:

   (a) 1 H **(b)** 250 μH **(c)** 10 μH **(d)** 0.0005 H

2. Convert the following to microhenries:

   (a) 300 mH **(b)** 0.08 H **(c)** 5 mH **(d)** 0.00045 mH

3. How many turns are required to produce 30 mH with a coil wound on a cylindrical core having a cross-sectional area of 10×10^{-5} m^2 and a length of 0.05 m? The core has a permeability of 1.26×10^{-6}.

4. A 12 V battery is connected across a coil with a winding resistance of 120 Ω. How much current is there in the coil?

5. How much energy is stored by a 100 mH inductor with a current of 1 A?

6. The current through a 100 mH coil is changing at a rate of 200 mA/s. How much voltage is induced across the coil?

SECTION 3 Series and Parallel Inductors

7. Five inductors are connected in series. The lowest value is 5 μH. If the value of each inductor is twice that of the preceding one, and if the inductors are connected in order of ascending values, what is the total inductance?

8. Suppose that you require a total inductance of 50 mH. You have available a 10 mH coil and a 22 mH coil. How much additional inductance do you need?

9. Determine the total parallel inductance for the following coils in parallel: 75 μH, 50 μH, 25 μH, and 15 μH.

10. You have a 12 mH inductor, and it is your smallest value. You need an inductance of 8 mH. What value can you use in parallel with the 12 mH to obtain 8 mH?

11. Determine the total inductance of each circuit in Figure 42.

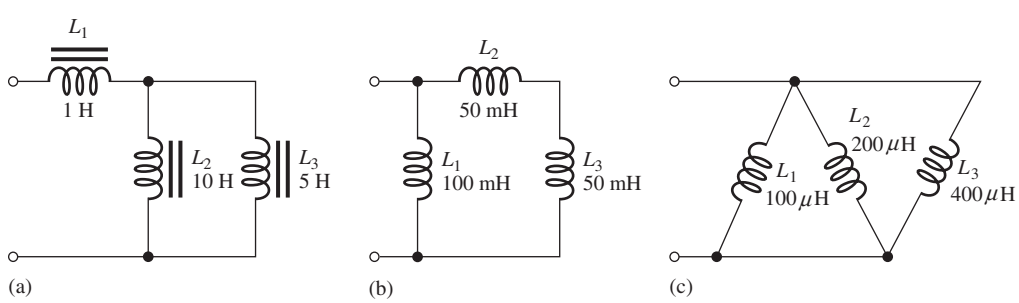

▲ FIGURE 42

www.EngineeringBooksPdf.com

12. Determine the total inductance of each circuit in Figure 43.

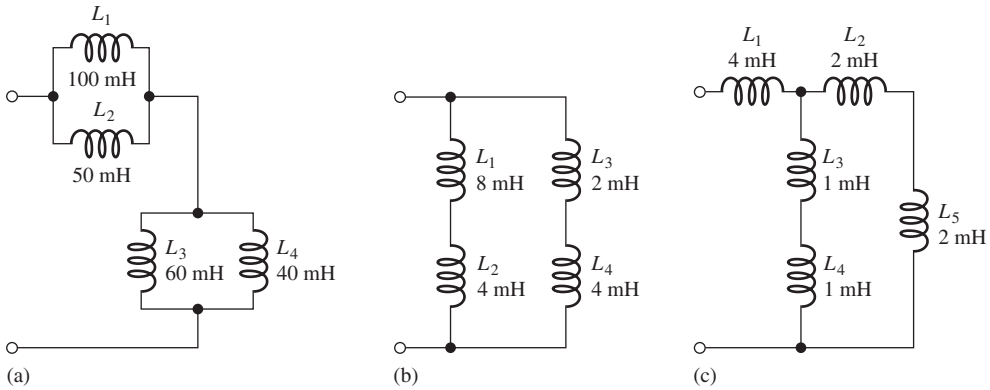

▲ FIGURE 43

SECTION 4 Inductors in DC Circuits

13. Determine the time constant for each of the following series *RL* combinations:

(a) $R = 100\ \Omega$, $L = 100\ \mu\text{H}$ **(b)** $R = 4.7\ \text{k}\Omega$, $L = 10\ \text{mH}$

(c) $R = 1.5\ \text{M}\Omega$, $L = 3\ \text{H}$

14. In a series *RL* circuit, determine how long it takes the current to build up to its full value for each of the following:

(a) $R = 56\ \Omega$, $L = 50\ \mu\text{H}$ **(b)** $R = 3300\ \Omega$, $L = 15\ \text{mH}$

(c) $R = 22\ \text{k}\Omega$, $L = 100\ \text{mH}$

15. In the circuit of Figure 44, there is initially no current. Determine the inductor voltage at the following times after the switch is closed:

(a) $10\ \mu\text{s}$ **(b)** $20\ \mu\text{s}$ **(c)** $30\ \mu\text{s}$ **(d)** $40\ \mu\text{s}$ **(e)** $50\ \mu\text{s}$

▶ FIGURE 44

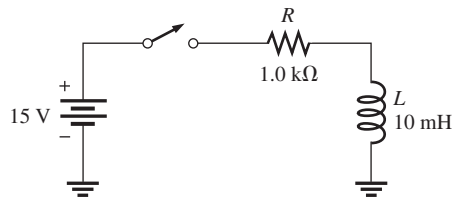

16. In Figure 45, calculate the current at each of the following times. Assume an ideal inductor and voltage source.

(a) $10\ \mu\text{s}$ **(b)** $20\ \mu\text{s}$ **(c)** $30\ \mu\text{s}$

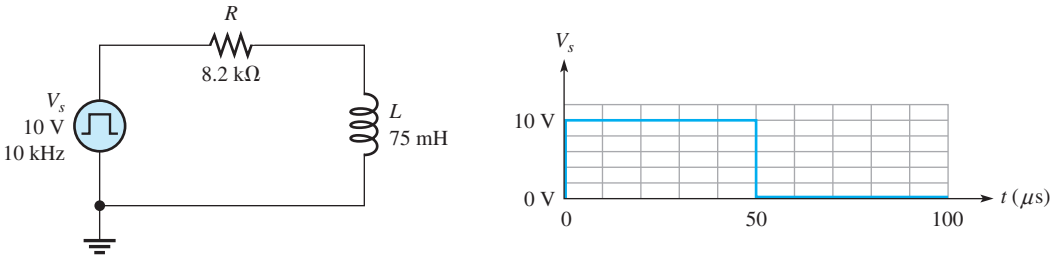

▲ FIGURE 45

www.EngineeringBooksPdf.com

SECTION 6 Inductors in AC Circuits

17. Find the total reactance for each circuit in Figure 42 when a voltage with a frequency of 5 kHz is applied across the terminals.

18. Find the total reactance for each circuit in Figure 43 when a 400 Hz voltage is applied.

19. Determine the total rms current in Figure 46. What are the currents through L_2 and L_3?

▶ FIGURE 46

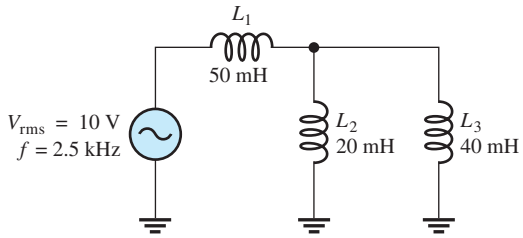

20. What frequency will produce a total rms current of 500 mA in each circuit of Figure 43 with an rms input voltage of 10 V?

21. Determine the reactive power in Figure 46, neglecting the winding resistance.

ADVANCED PROBLEMS

22. Determine the time constant for the circuit in Figure 47.

▶ FIGURE 47

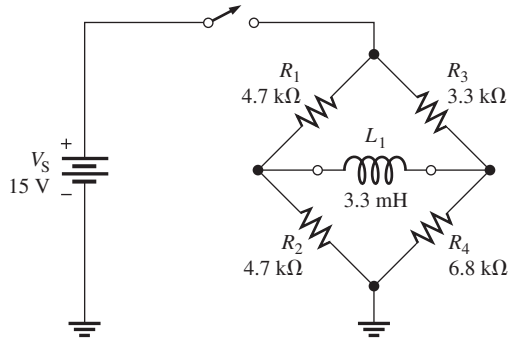

23. What is the voltage across the inductor in Figure 45 at each of the following times?

(a) 60 μs **(b)** 70 μs **(c)** 80 μs

24. What is the voltage across the resistor in Figure 45 at a time of 60 μs?

25. **(a)** What is the current in the inductor 1.0 μs after the switch closes in Figure 47.

(b) What is the current after 5τ have elapsed?

26. For the circuit in Figure 47, assume the switch has been closed for more than 5τ and is opened. What is the current in the inductor 1.0 μs after the switch is opened?

27. Determine the value of I_{L2} in Figure 48.

▶ FIGURE 48

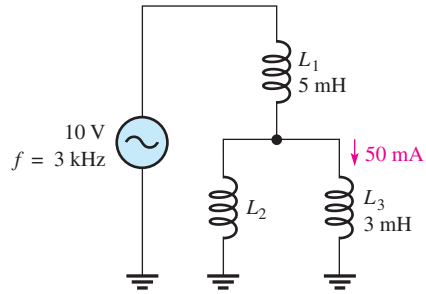

www.EngineeringBooksPdf.com

28. What is the total inductance between terminals *A* and *B* for each switch position in Figure 49?

▶ FIGURE 49

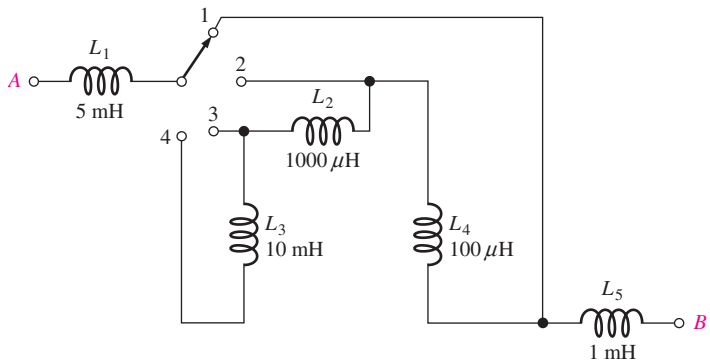

MULTISIM TROUBLESHOOTING PROBLEMS

29. Open file P11-29; files are found at www.pearsonhighered.com/floyd/. Test the circuit. If there is a fault, identify it.

30. Open file P11-30 and test the circuit. If there is a fault, identify it.

31. Determine if there is a fault in the circuit in file P11-31. If so, identify it.

32. Find and specify any faulty component in the circuit in file P11-32.

33. Is there a short or an open in the circuit in file P11-33? If so, identify the component that is faulty.

ANSWERS

SECTION CHECKUPS

SECTION 1 The Basic Inductor

1. Parameters that determine inductance are turns of wire, permeability, cross-sectional area, and core length.
2. **(a)** When *N* increases, *L* increases.
   (b) When the core length increases, *L* decreases.
   (c) When the cross-sectional area decreases, *L* decreases.
   (d) For an air core, *L* decreases.
3. All wire has some resistance, and because inductors are made from turns of wire, there is always resistance in the winding.
4. Adjacent turns of wire in a coil act as plates of a capacitor and produce a small capacitance.

SECTION 2 Types of Inductors

1. Two categories of inductors are fixed and variable.
2. **(a)** air core **(b)** iron core **(c)** variable

SECTION 3 Series and Parallel Inductors

1. Inductances are added in series.
2. $L_T = 2600\ \mu H$
3. $L_T = 5 \times 100\ mH = 500\ mH$
4. The total parallel inductance is smaller than that of the smallest-value individual inductor in parallel.
5. True
6. **(a)** $L_T = 7.69\ mH$ **(b)** $L_T = 24\ \mu H$ **(c)** $L_T = 100\ mH$

www.EngineeringBooksPdf.com

SECTION 4 Inductors in DC Circuits

1. $V_L = (10\text{ mA})(10\ \Omega) = 100\text{ mV}$
2. Initially, $i = 0\text{ V}$, $v_L = 20\text{ V}$
3. After 5τ, $v_L = 0\text{ V}$
4. $\tau = 500\ \mu\text{H}/1.0\text{ k}\Omega = 500\text{ ns}$, $i_L = 3.93\text{ mA}$

SECTION 5 Inductors in AC Circuits

1. Voltage leads current by 90° in an inductor.
2. $X_L = 2\pi fL = 3.14\text{ k}\Omega$
3. $f = X_L/2\pi L = 2.55\text{ MHz}$
4. $I_{\text{rms}} = 15.9\text{ mA}$
5. $P_{\text{true}} = 0\text{ W}$, $P_r = 458\text{ mVAR}$

SECTION 6 Inductor Applications

1. Conductive and radiated
2. Electromagnetic interference
3. It is placed on a wire to increase its inductance, creating an RF choke.

RELATED PROBLEMS FOR EXAMPLES

1 157 mH

2 150 μH

3 20.3 μH

4 227 ns

5 $I_F = 17.6\text{ mA}$, $\tau = 147\text{ ns}$

At 1τ: $i = 11.1\text{ mA}$; $t = 147\text{ ns}$

At 2τ: $i = 15.1\text{ mA}$; $t = 294\text{ ns}$

At 3τ: $i = 16.7\text{ mA}$; $t = 441\text{ ns}$

At 4τ: $i = 17.2\text{ mA}$; $t = 588\text{ ns}$

At 5τ: $i = 17.4\text{ mA}$; $t = 735\text{ ns}$

6 At 0.2 ms: $i = 0.215\text{ mA}$

At 0.8 ms: $i = 0.0125\text{ mA}$

7 10 V if R_W is neglected.

8 3.83 mA

9 6.7 mA

10 1100 Ω

11 (a) 7.17 kΩ; (b) 1.04 kΩ

12 573 mA

13 P_r decreases.

TRUE/FALSE QUIZ

1. F **2.** T **3.** T **4.** T **5.** F **6.** F **7.** F **8.** F **9.** T **10.** F

SELF-TEST

1. (c) **2.** (d) **3.** (c) **4.** (b) **5.** (d) **6.** (a) **7.** (d)
8. (c) **9.** (b) **10.** (a) **11.** (d)

TROUBLESHOOTING: SYMPTOM AND CAUSE

1. (c) **2.** (a) **3.** (b) **4.** (a) **5.** (b)

www.EngineeringBooksPdf.com

PROBLEMS – ODD-NUMBERED ANSWERS

1. **(a)** 1000 mH **(b)** 0.25 mH **(c)** 0.01 mH **(d)** 0.5 mH

3. 3450 turns

5. 50 mJ

7. 155 μH

9. 7.14 μH

11. **(a)** 4.33 H **(b)** 50 mH **(c)** 57 μH

13. **(a)** 1 μs **(b)** 2.13 μs **(c)** 2 μs

15. **(a)** 5.52 V **(b)** 2.03 V **(c)** 0.747 V **(d)** 0.275 V **(e)** 0.101 V

17. **(a)** 136 kΩ **(b)** 1.57 kΩ **(c)** 1.79 Ω

19. $I_{tot} = 10.1$ mA; $I_{L2} = 6.7$ mA; $I_{L3} = 3.37$ mA

21. 101 mVAR

23. **(a)** −3.35 V **(b)** −1.12 V **(c)** −0.37 V

25. **(a)** 0.427 mA **(b)** 0.569 mA

27. 26.1 mA

29. L_3 is open.

31. No fault

33. L_3 is shorted.

PHOTO CREDITS FOR REOCCURRING IMAGES

CD Icon: Stockbyte/Getty Images; **Computer Chips:** Photodisc/Thinkstock; **Computer:** Jeff Maloney/Photodisc/Getty Images; **Fiber Optic:** discpicture/Shutterstock.

www.EngineeringBooksPdf.com

This page intentionally left blank

www.EngineeringBooksPdf.com

RL Circuits

CHAPTER OUTLINE

1 Sinusoidal Response of *RL* Circuits
2 Impedance and Phase Angle of Series *RL* Circuits
3 Analysis of Series *RL* Circuits
4 Impedance and Phase Angle of Parallel *RL* Circuits
5 Analysis of Parallel *RL* Circuits
6 Analysis of Series-Parallel *RL* Circuits
7 Power in *RL* Circuits
8 Basic Applications
9 Troubleshooting
Application Assignment: Putting Your Knowledge to Work

CHAPTER OBJECTIVES

- Describe the relationship between current and voltage in an *RL* circuit
- Determine impedance and phase angle in a series *RL* circuit
- Analyze a series *RL* circuit
- Determine impedance and phase angle in a parallel *RL* circuit
- Analyze a parallel *RL* circuit
- Analyze series-parallel *RL* circuits
- Determine power in *RL* circuits
- Discuss some basic *RL* applications
- Troubleshoot *RL* circuits

KEY TERMS

- *RL* lag circuit
- *RL* lead circuit
- Inductive susceptance (B_L)

APPLICATION ASSIGNMENT PREVIEW

The assignment will be to identify the types of *RL* circuits contained in two sealed modules that have been removed from a communications system. You will use your knowledge of *RL* circuits and basic measurements to determine the circuit arrangement and component values. After studying this chapter, you should be able to complete the application assignment.

VISIT THE COMPANION WEBSITE

Study aids for this chapter are available at http://www.pearsonhighered.com/floyd/

INTRODUCTION

An *RL* circuit contains both resistance and inductance. In this chapter, series and parallel *RL* circuits and their responses to sinusoidal voltages are covered. In addition, series-parallel combinations are examined. Power considerations in *RL* circuits are introduced, and practical aspects of the power factor are discussed. A method of improving the power factor is presented, and two basic *RL* circuit applications are covered. Troubleshooting common faults in *RL* circuits is also covered.

The methods for analyzing reactive circuits are similar to those you studied in dc circuits. Reactive circuit problems can be solved at only one frequency at a time, and phasor math must be used.

As you study this chapter, note both the differences and the similarities in the response of *RL* circuits compared to *RC* circuits.

Streeter Photography/Alamy

From Chapter 12 of *Electronics Fundamentals: Circuits, Devices, and Applications*, Eighth Edition, Thomas L. Floyd, David M. Buchla. Copyright © 2010 by Pearson Education, Inc. Published by Pearson Prentice Hall. All rights reserved.

www.EngineeringBooksPdf.com

1 SINUSOIDAL RESPONSE OF *RL* CIRCUITS

As with an *RC* circuit, all currents and voltages in any type of *RL* circuit are sinusoidal when the input voltage is sinusoidal. The inductance causes a phase shift between the voltage and the current that depends on the relative values of the resistance and the inductive reactance. Because of its winding resistance, the inductor is generally not as "ideal" as a resistor or capacitor. However, it will usually be treated as ideal for purposes of illustration.

After completing this section, you should be able to

- **Describe the relationship between current and voltage in an *RL* circuit**
  - Discuss voltage and current waveforms
  - Discuss phase shift

In an *RL* circuit, the resistor voltage and the current lag the source voltage. The inductor voltage leads the source voltage. Ideally, the phase angle between the current and the inductor voltage is always 90°. These generalized phase relationships are indicated in Figure 1. Notice how they differ from those of an *RC* circuit.

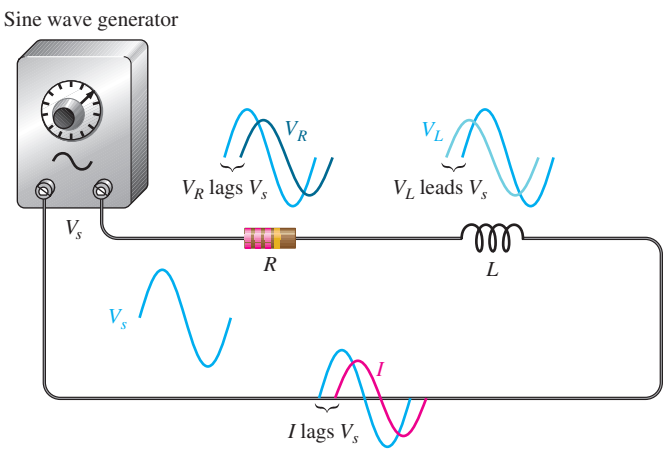

▶ **FIGURE 1**

Illustration of sinusoidal response with general phase relationships of V_R, V_L, and I relative to the source voltage. V_R and I are in phase; V_R and V_L are 90° out of phase with each other.

The amplitudes and the phase relationships of the voltages and current depend on the values of the resistance and the inductive reactance. When a circuit is purely inductive, the phase angle between the source voltage and the total current is 90°, with the current lagging the voltage. When there is a combination of both resistance and inductive reactance in a circuit, the phase angle is somewhere between zero and 90°, depending on the relative values of the resistance and the inductive reactance. Because all inductors have winding resistance, ideal conditions may be approached but never reached in practice.

SECTION 1 CHECKUP
Answers are at the end of the chapter.

1. A 1 kHz sinusoidal voltage is applied to an *RL* circuit. What is the frequency of the resulting current?
2. When the resistance in an *RL* circuit is greater than the inductive reactance, is the phase angle between the source voltage and the total current closer to 0° or to 90°?

This icon indicates selected websites for further information on topics in this section. See the Companion Website provided with this text.

www.EngineeringBooksPdf.com

2 IMPEDANCE AND PHASE ANGLE OF SERIES *RL* CIRCUITS

Impedance for *RC* circuits represents the total opposition to sinusoidal current. As in the case with *RC* circuits, impedance is the combination of the resistive and reactive quantities, which can be represented by phasors. Because of phase differences, the total impedance must be treated as a phasor quantity.

After completing this section, you should be able to

- **Determine impedance and phase angle in a series *RL* circuit**
  - Draw the impedance triangle
  - Calculate impedance magnitude
  - Calculate the phase angle

The **impedance** of a series *RL* circuit is the total opposition to sinusoidal current and its unit is the ohm. The **phase angle** is the phase difference between the total current and the source voltage. Impedance (Z) is determined by the resistance (R) and the inductive reactance (X_L), as indicated in Figure 2.

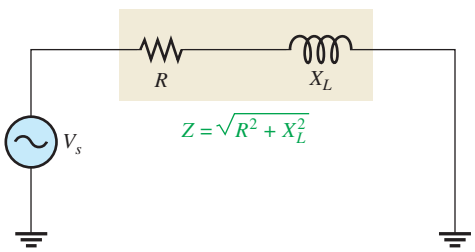

FIGURE 2

Impedance of a series *RL* circuit.

In ac analysis, both R and X_L are treated as phasor quantities, as shown in the phasor diagram of Figure 3(a), with X_L appearing at a +90° angle with respect to R. This relationship comes from the fact that the inductor voltage leads the current, and thus the resistor voltage, by 90°. Since Z is the phasor sum of R and X_L, its phasor representation is as shown in Figure 3(b). A repositioning of the phasors, as shown in part (c), forms a right triangle. This formation, as you have learned, is called the *impedance triangle.* The length of each phasor represents the magnitude of the quantity, and θ is the phase angle between the source voltage and the current in the *RL* circuit.

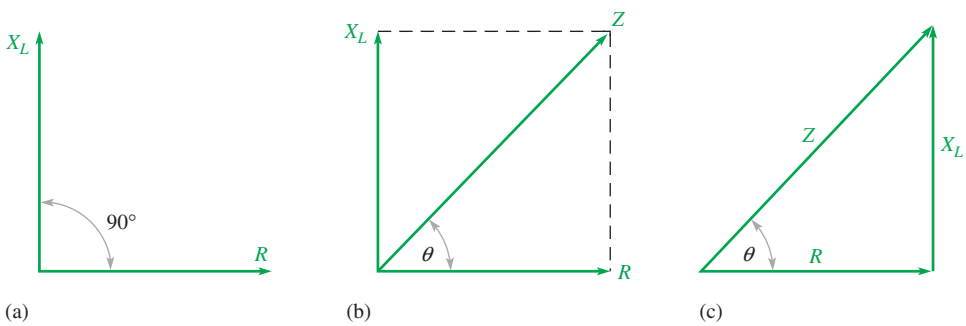

FIGURE 3

Development of the impedance triangle for a series *RL* circuit.

The magnitude of the impedance, Z, of the series *RL* circuit can be expressed in terms of the resistance and reactance as

$$Z = \sqrt{R^2 + X_L^2} \qquad \text{Equation 1}$$

where Z is expressed in ohms.

www.EngineeringBooksPdf.com

The phase angle, θ, is expressed as

Equation 2

$$\theta = \tan^{-1}\left(\frac{X_L}{R}\right)$$

EXAMPLE 1

Determine the impedance and phase angle of the circuit in Figure 4. Draw the impedance triangle.

▶ FIGURE 4

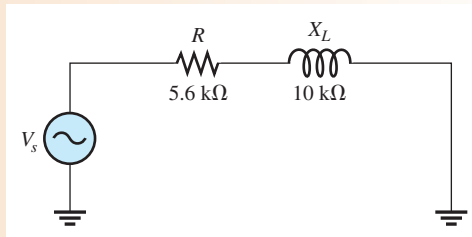

Solution The impedance is

$$Z = \sqrt{R^2 + X_L^2} = \sqrt{(5.6\,\text{k}\Omega)^2 + (10\,\text{k}\Omega)^2} = \mathbf{11.5\,k\Omega}$$

The value of the phase angle is

$$\theta = \tan^{-1}\left(\frac{X_L}{R}\right) = \tan^{-1}\left(\frac{10\,\text{k}\Omega}{5.6\,\text{k}\Omega}\right) = \mathbf{60.8°}$$

The source voltage leads the current by 60.8°. The impedance triangle is shown in Figure 5.

▶ FIGURE 5

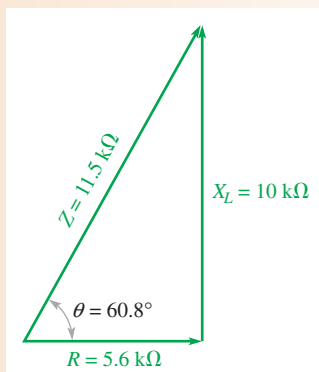

*Related Problem** In a series *RL* circuit, $R = 1.8\,\text{k}\Omega$ and $X_L = 950\,\Omega$. Determine the impedance and phase angle.

*Answers are at the end of the chapter.

SECTION 2 CHECKUP

1. Does the source voltage lead or lag the current in a series *RL* circuit?
2. What is the relationship between X_L and R when the phase angle is 45°?
3. How does the phase angle in an *RL* circuit differ from the phase angle in an *RC* circuit?
4. A series *RL* circuit has a resistance of 33 kΩ and an inductive reactance of 50 kΩ. Determine Z and θ.

www.EngineeringBooksPdf.com

3 ANALYSIS OF SERIES *RL* CIRCUITS

Ohm's law and Kirchhoff's voltage law are used in the analysis of series *RL* circuits to determine voltage, current, and impedance. Also, in this section *RL* lead and lag circuits are examined.

After completing this section, you should be able to

- **Analyze a series *RL* circuit**
  - Apply Ohm's law and Kirchhoff's voltage law to series *RL* circuits
  - Determine the phase relationships of the voltages and current
  - Show how impedance and phase angle vary with frequency
  - Discuss and analyze the *RL* lag circuit
  - Discuss and analyze the *RL* lead circuit

Ohm's Law

The application of Ohm's law to series *RL* circuits involves the use of the quantities of Z, V, and I. The three equivalent forms of Ohm's law for *RC* circuits apply also to *RL* circuits and are stated here:

$$V = IZ \qquad I = \frac{V}{Z} \qquad Z = \frac{V}{I}$$

The following example illustrates the use of Ohm's law.

EXAMPLE 2

The current in Figure 6 is 200 μA. Determine the source voltage.

▶ FIGURE 6

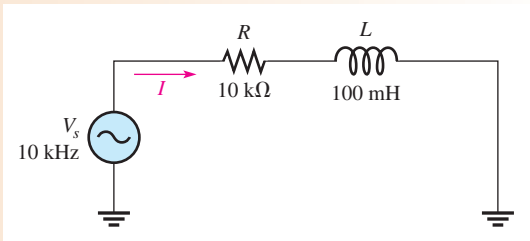

Solution The inductive reactance is

$$X_L = 2\pi fL = 2\pi(10\text{ kHz})(100\text{ mH}) = 6.28\text{ k}\Omega$$

The impedance is

$$Z = \sqrt{R^2 + X_L^2} = \sqrt{(10\text{ k}\Omega)^2 + (6.28\text{ k}\Omega)^2} = 11.8\text{ k}\Omega$$

Applying Ohm's law yields

$$V_s = IZ = (200\ \mu\text{A})(11.8\text{ k}\Omega) = \mathbf{2.36\ V}$$

Related Problem If the source voltage in Figure 6 is 5 V, what would be the current?

www.EngineeringBooksPdf.com

Open Multisim file E12-02; files are found at www.pearson.highered.com/floyd. Measure the current at 10 kHz, 5 kHz, and 20 kHz. Explain the results of your measurement.

Phase Relationships of the Current and Voltages

In a series *RL* circuit, the current is the same through both the resistor and the inductor. Thus, the resistor voltage is in phase with the current, and current lags the inductor voltage by 90°. Therefore, there is a phase difference of 90° between the resistor voltage, V_R, and the inductor voltage, V_L, as shown in the waveform diagram of Figure 7.

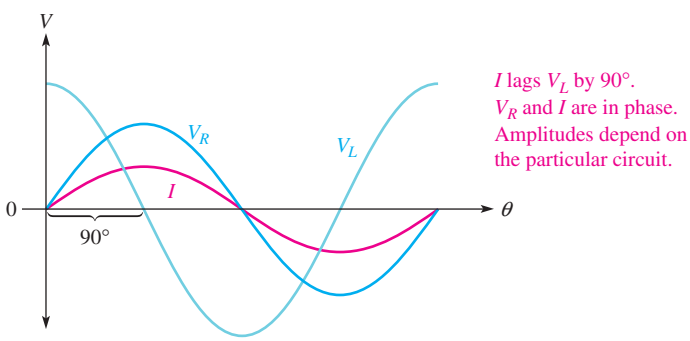

▶ FIGURE 7

Phase relation of current and voltages in a series *RL* circuit.

From Kirchhoff's voltage law, the sum of the voltage drops must equal the source voltage. However, since V_R and V_L are not in phase with each other, they must be added as phasor quantities with V_L leading V_R by 90°, as shown in Figure 8(a). As shown in part (b), V_s is the phasor sum of V_R and V_L. This equation can be expressed as

Equation 3

$$V_s = \sqrt{V_R^2 + V_L^2}$$

The phase angle between the resistor voltage and the source voltage can be expressed as

Equation 4

$$\theta = \tan^{-1}\left(\frac{V_L}{V_R}\right)$$

Since the resistor voltage and the current are in phase, θ in Equation 4 also represents the phase angle between the source voltage and the current and is equivalent to $\tan^{-1}(X_L/R)$.

Figure 9 shows a voltage and current phasor diagram that represents the waveform diagram of Figure 7.

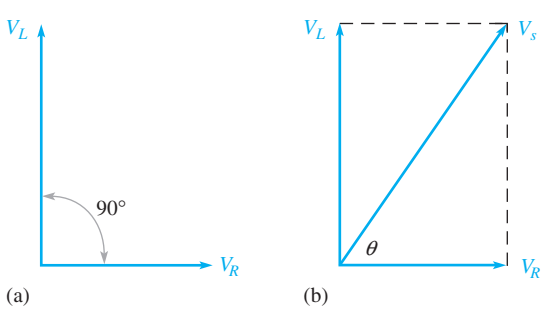

▲ FIGURE 8

Voltage phasor diagram for the waveforms in Figure 7.

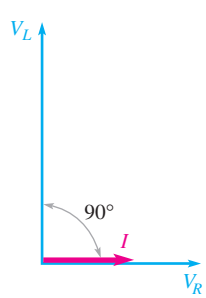

▲ FIGURE 9

Voltage and current phasor diagram for the waveforms in Figure 7.

www.EngineeringBooksPdf.com

EXAMPLE 3

Determine the source voltage and the phase angle in Figure 10. Draw the voltage phasor diagram.

▶ FIGURE 10

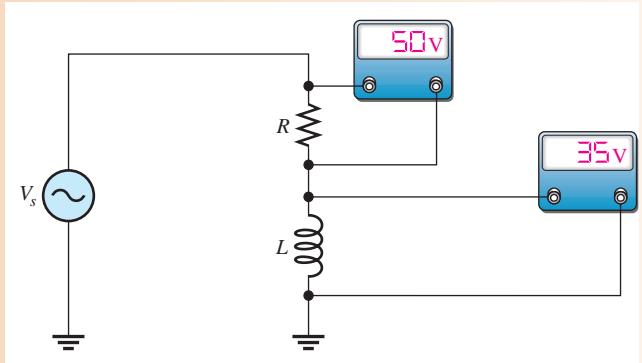

Solution Since V_R and V_L are 90° out of phase, you cannot add them directly. The source voltage is the phasor sum of V_R and V_L.

$$V_s = \sqrt{V_R^2 + V_L^2} = \sqrt{(50\text{ V})^2 + (35\text{ V})^2} = \mathbf{61\ V}$$

The phase angle between the resistor voltage and the source voltage is

$$\theta = \tan^{-1}\left(\frac{V_L}{V_R}\right) = \tan^{-1}\left(\frac{35\text{ V}}{50\text{ V}}\right) = \mathbf{35°}$$

The voltage phasor diagram is shown in Figure 11.

▶ FIGURE 11

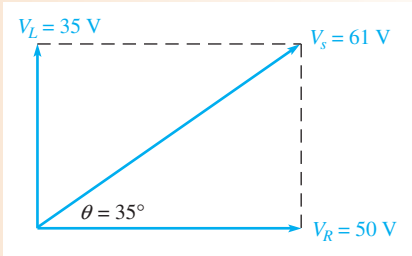

Related Problem With the information given, can you determine the current in Figure 10?

Variation of Impedance and Phase Angle with Frequency

As you know, inductive reactance varies directly with frequency. When X_L increases, the total impedance also increases; and when X_L decreases, the total impedance decreases. Thus, *in an RL circuit, Z is directly dependent on frequency.*

Figure 12 illustrates how the voltages and current in a series *RL* circuit vary as the frequency increases or decreases, with the source voltage held at a constant value. Part (a) shows that as frequency is increased, the increase in X_L will cause more voltage to appear across the inductor and less current will be in the circuit. Thus, V_L increases and V_R decreases. Also, Z is larger because there is less total current with the same total voltage across the circuit.

Figure 12(b) shows that as frequency decreases, the voltage across the inductor decreases because X_L decreases. Also, Z decreases, causing the current to increase. An increase in current causes more voltage across the resistor.

www.EngineeringBooksPdf.com

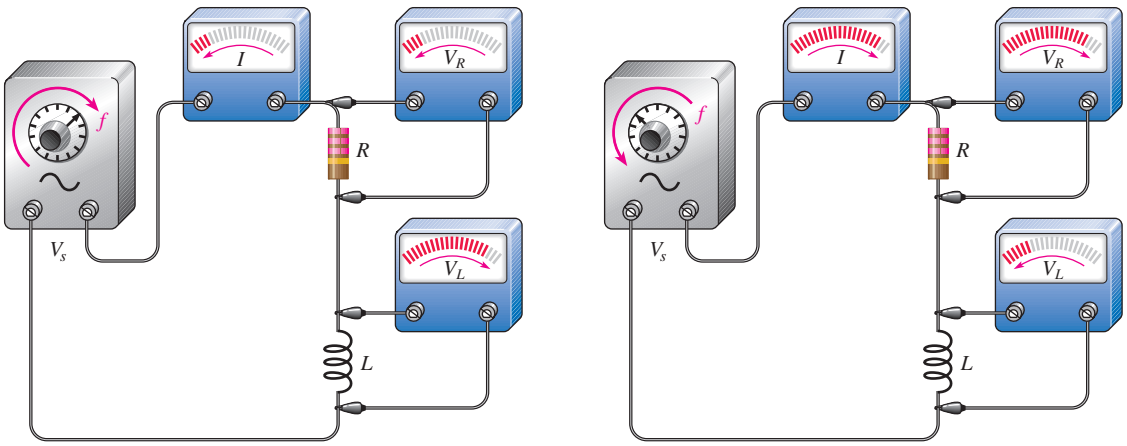

(a) As frequency is increased, I and V_R decrease and V_L increases.

(b) As frequency is decreased, I and V_R increase and V_L decreases.

▲ **FIGURE 12**

An illustration of how the variation of impedance affects the voltages and current as the source frequency is varied. The source voltage is held at a constant amplitude.

Changes in Z and X_L can be observed as shown in Figure 13. As the frequency increases, the voltage across Z remains constant because V_s is constant ($V_s = V_Z$), but the voltage across L increases. The decreasing current indicates that Z is increasing. It does so because of the inverse relationship stated in Ohm's law ($Z = V_Z/I$). The decreasing current also indicates that X_L is increasing. The increase in V_L corresponds to the increase in X_L.

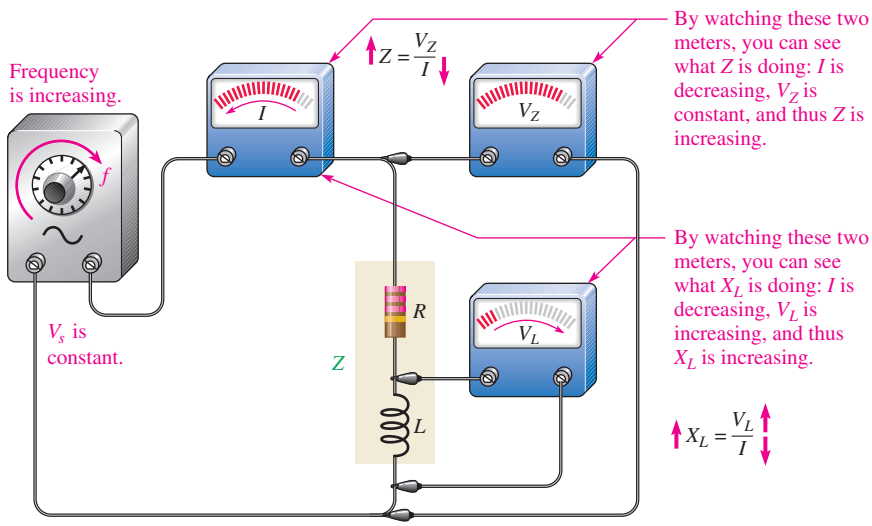

▲ **FIGURE 13**

Observing changes in Z and X_L with frequency by watching the meters and recalling Ohm's law.

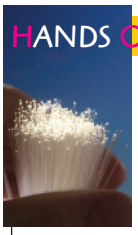

HANDS ON TIP

As you know, some multimeters have a relatively low frequency response. There are other things of which you should be aware. One is that most ac meters are accurate only if the waveform being measured is sinusoidal. Another is that accuracy when measuring small ac voltage is usually less than for dc measurements. Finally, loading can affect the accuracy of meter readings.

Since X_L is the factor that introduces the phase angle in a series RL circuit, a change in X_L produces a change in the phase angle. As the frequency is increased, X_L becomes greater, and thus the phase angle increases. As the frequency is decreased, X_L becomes smaller, and thus the phase angle decreases. The angle between V_s and V_R is the phase angle of the circuit because I is in phase with V_R. The variations of phase angle with frequency are illustrated with the impedance triangle as shown in Figure 14.

www.EngineeringBooksPdf.com

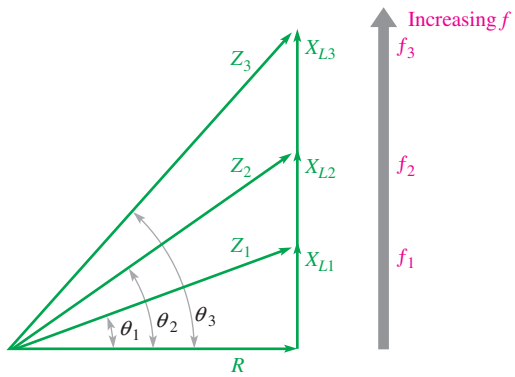

FIGURE 14

As the frequency increases, the phase angle θ increases.

EXAMPLE 4

For the series *RL* circuit in Figure 15, determine the impedance and the phase angle for each of the following frequencies:

(a) 10 kHz **(b)** 20 kHz **(c)** 30 kHz

FIGURE 15

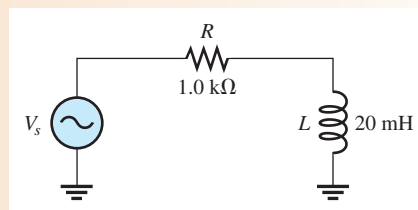

Solution

(a) For $f = 10$ kHz, calculate the impedance as follows:

$$X_L = 2\pi fL = 2\pi(10\text{ kHz})(20\text{ mH}) = 1.26\text{ k}\Omega$$

$$Z = \sqrt{R^2 + X_L^2} = \sqrt{(1.0\text{ k}\Omega)^2 + (1.26\text{ k}\Omega)^2} = \mathbf{1.61\ k\Omega}$$

The phase angle is

$$\theta = \tan^{-1}\left(\frac{X_L}{R}\right) = \tan^{-1}\left(\frac{1.26\text{ k}\Omega}{1.0\text{ k}\Omega}\right) = \mathbf{51.6°}$$

(b) For $f = 20$ kHz,

$$X_L = 2\pi(20\text{ kHz})(20\text{ mH}) = 2.51\text{ k}\Omega$$

$$Z = \sqrt{(1.0\text{ k}\Omega)^2 + (2.51\text{ k}\Omega)^2} = \mathbf{2.70\ k\Omega}$$

$$\theta = \tan^{-1}\left(\frac{2.51\text{ k}\Omega}{1.0\text{ k}\Omega}\right) = \mathbf{68.3°}$$

(c) For $f = 30$ kHz,

$$X_L = 2\pi(30\text{ kHz})(20\text{ mH}) = 3.77\text{ k}\Omega$$

$$Z = \sqrt{(1.0\text{ k}\Omega)^2 + (3.77\text{ k}\Omega)^2} = \mathbf{3.90\ k\Omega}$$

$$\theta = \tan^{-1}\left(\frac{3.77\text{ k}\Omega}{1.0\text{ k}\Omega}\right) = \mathbf{75.1°}$$

Notice that as the frequency increases, X_L, Z, and θ also increase.

Related Problem

Determine Z and θ in Figure 15 if $f = 100$ kHz.

www.EngineeringBooksPdf.com

RL Lag Circuit

The ***RL* lag circuit** is a phase shift circuit in which the output voltage lags the input voltage by a specified angle, ϕ. A basic series *RL* lag circuit is shown in Figure 16(a). Notice that the output voltage is taken across the resistor and the input voltage is the total voltage applied across the circuit. The relationship of the voltages is shown in the phasor diagram in Figure 16(b), and a waveform diagram is shown in Figure 16(c). Notice that the output voltage, V_{out}, lags V_{in} by an angle, designated ϕ, that is the same as the circuit phase angle. The angles are equal, of course, because V_R and I are in phase with each other.

The phase lag, ϕ, can be expressed as

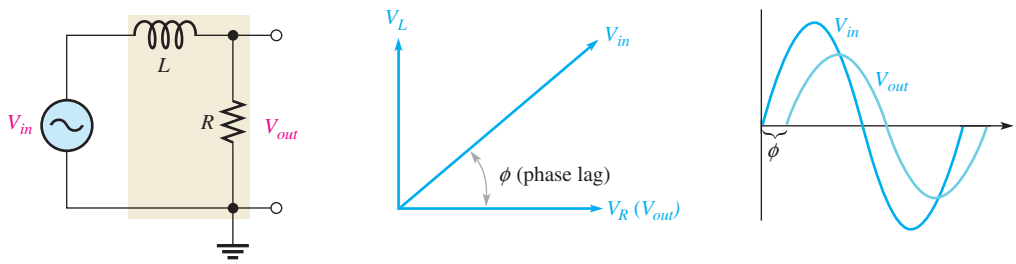

(a) A basic *RL* lag circuit

(b) Phasor voltage diagram showing phase lag between V_{in} and V_{out}

(c) Input and output waveforms

▲ **FIGURE 16**

The *RL* lag circuit ($V_{out} = V_R$).

The phase lag, ϕ, can be expressed as

Equation 5

$$\phi = \tan^{-1}\left(\frac{X_L}{R}\right)$$

EXAMPLE 5

Calculate the phase lag for each circuit in Figure 17.

▶ **FIGURE 17**

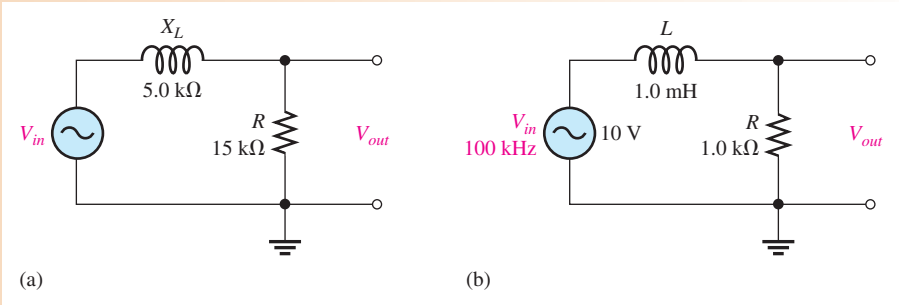

Solution For the circuit in Figure 17(a),

$$\phi = \tan^{-1}\left(\frac{X_L}{R}\right) = \tan^{-1}\left(\frac{5.0\,\text{k}\Omega}{15\,\text{k}\Omega}\right) = \mathbf{18.4°}$$

The output lags the input by 18.4°.

For the circuit in Figure 17(b), first determine the inductive reactance.

$$X_L = 2\pi fL = 2\pi(100\,\text{kHz})(1.0\,\text{mH}) = 628\,\Omega$$

www.EngineeringBooksPdf.com

The phase lag is

$$\phi = \tan^{-1}\left(\frac{X_L}{R}\right) = \tan^{-1}\left(\frac{628\ \Omega}{1.0\ \text{k}\Omega}\right) = \mathbf{31.1°}$$

The output lags the input by 32.1°.

Related Problem In a certain lag circuit, $R = 5.6\ \text{k}\Omega$ and $X_L = 3.5\ \text{k}\Omega$. Determine the phase lag between input and output.

The phase-lag circuit can be considered as a voltage divider with a portion of the input voltage dropped across L and a portion across R. The output voltage can be determined with the following formula:

$$V_{out} = \left(\frac{R}{\sqrt{R^2 + X_L^2}}\right)V_{in} \qquad \text{Equation 6}$$

EXAMPLE 6

The input voltage in Figure 17(b) of Example 5 has an rms value of 10 V. Determine the output voltage for the lag circuit shown in Figure 17(b). Draw the waveform relationships for the input and output voltages. The phase lag (32.1°) and X_L (628 Ω) were found in Example 5.

Solution Use Equation 6 to determine the output voltage for the lag circuit in Figure 17(b).

$$V_{out} = \left(\frac{R}{\sqrt{R^2 + X_L^2}}\right)V_{in} = \left(\frac{1.0\ \text{k}\Omega}{1.18\ \text{k}\Omega}\right)10\ \text{V} = \mathbf{8.47\ V\ rms}$$

The waveforms are shown in Figure 18.

▶ FIGURE 18

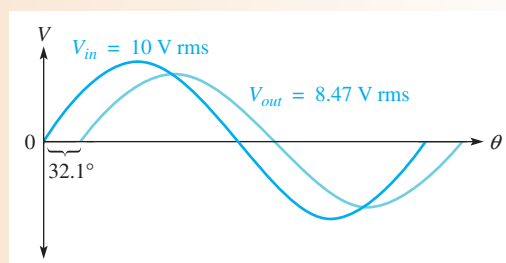

Related Problem In a lag circuit, $R = 4.7\ \text{k}\Omega$ and $X_L = 6\ \text{k}\Omega$. If the rms input voltage is 20 V, what is the output voltage?

Open Multisim file E12-06. Measure the output voltage and compare to the calculated value.

Effects of Frequency on the Lag Circuit Since the circuit phase angle and the phase lag are the same, an increase in frequency causes an increase in phase lag. Also, an increase in frequency causes a decrease in the magnitude of the output voltage because X_L becomes greater and more of the total voltage is dropped across the inductor and less across the resistor.

www.EngineeringBooksPdf.com

RL Lead Circuit

The ***RL* lead circuit** is a phase shift circuit in which the output voltage leads the input voltage by a specified angle, ϕ. A basic series *RL* lead circuit is shown in Figure 19(a). Notice how this circuit differs from the lag circuit. Here the output voltage is taken across the inductor rather than across the resistor. The relationship of the voltages is shown in the phasor diagram of Figure 19(b) and in the waveform plot of Figure 19(c). Notice that the output voltage, V_{out}, leads V_{in} by an angle (phase lead) that is the difference between 90° and the circuit phase angle θ.

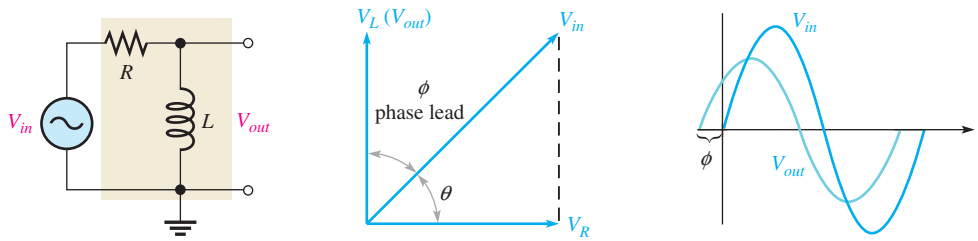

(a) A basic *RL* lead circuit

(b) Phasor voltage diagram showing V_{out} leading V_{in}

(c) Input and output voltage waveforms

▲ **FIGURE 19**

The *RL* lead circuit ($V_{out} = V_L$).

Since $\theta = \tan^{-1}(X_L/R)$, the phase lead, ϕ, can be expressed as

Equation 7

$$\phi = 90° - \tan^{-1}\left(\frac{X_L}{R}\right)$$

Equivalently,

$$\phi = \tan^{-1}\left(\frac{R}{X_L}\right)$$

Again, the phase-lead circuit can be considered as a voltage divider with the voltage across *L* being the output. The expression for the output voltage is

Equation 8

$$V_{out} = \left(\frac{X_L}{\sqrt{R^2 + X_L^2}}\right)V_{in}$$

EXAMPLE 7

Determine the amount of phase lead and output voltage in the lead circuit in Figure 20.

▶ **FIGURE 20**

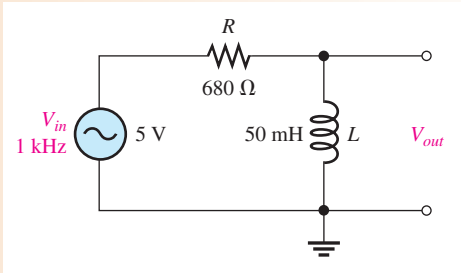

Solution First, determine the inductive reactance.

$$X_L = 2\pi fL = 2\pi(1\text{ kHz})(50\text{ mH}) = 314\ \Omega$$

www.EngineeringBooksPdf.com

The phase lead is

$$\phi = 90° - \tan^{-1}\left(\frac{X_L}{R}\right) = 90° - \tan^{-1}\left(\frac{314\ \Omega}{680\ \Omega}\right) = \mathbf{65.2°}$$

The output leads the input by 65.2°.

The output voltage is

$$V_{out} = \left(\frac{X_L}{\sqrt{R^2 + X_L^2}}\right)V_{in} = \left(\frac{314\ \Omega}{\sqrt{(680\ \Omega)^2 + (314\ \Omega)^2}}\right)5\text{ V} = \mathbf{2.1\ V}$$

Related Problem In a certain lead circuit, $R = 2.2\text{ k}\Omega$ and $X_L = 1\text{ k}\Omega$. What is the phase lead?

Open Multisim file E12-07. Measure the output voltage and compare to the calculated value.

Effects of Frequency on the Lead Circuit Since the circuit phase angle, θ, increases as frequency increases, the phase lead between the input and the output voltages decreases. Also, the amplitude of the output voltage increases as the frequency increases because X_L becomes greater and more of the total input voltage is dropped across the inductor.

SECTION 3 CHECKUP

1. In a certain series *RL* circuit, $V_R = 2\text{ V}$ and $V_L = 3\text{ V}$. What is the magnitude of the total voltage?
2. In Question 1, what is the phase angle?
3. When the frequency of the source voltage in a series *RL* circuit is increased, what happens to the inductive reactance? What happens to the impedance? What happens to the phase angle?
4. A certain *RL* lead circuit consists of a 3.3 kΩ resistor and a 15 mH inductor. Determine the phase lead between input and output at a frequency of 5 kHz.
5. An *RL* lag circuit has the same component values as the lead circuit in Question 4. What is the magnitude of the output voltage at 5 kHz when the input is 10 V rms?

4 IMPEDANCE AND PHASE ANGLE OF PARALLEL *RL* CIRCUITS

In this section, you will learn how to determine the impedance and phase angle of a parallel *RL* circuit. Also, inductive susceptance and admittance of a parallel *RL* circuit are introduced.

After completing this section, you should be able to

- **Determine impedance and phase angle in a parallel *RL* circuit**
  - Express total impedance in a product-over-sum form
  - Express the phase angle in terms of R and X_L
  - Determine inductive susceptance and admittance
  - Convert admittance to impedance

www.EngineeringBooksPdf.com

A basic parallel *RL* circuit is shown in Figure 21. The expression for the impedance, using the product-over-sum rule, is

Equation 9

$$Z = \frac{RX_L}{\sqrt{R^2 + X_L^2}}$$

The phase angle between the source voltage and the total current can be expressed in terms of R and X_L as

Equation 10

$$\theta = \tan^{-1}\left(\frac{R}{X_L}\right)$$

▶ FIGURE 21

Parallel *RL* circuit.

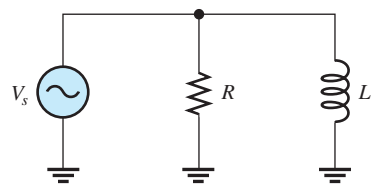

EXAMPLE 8

For each circuit in Figure 22, determine the impedance and the phase angle.

▶ FIGURE 22

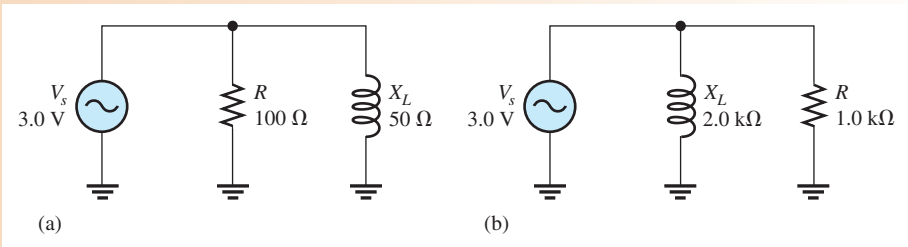

Solution For the circuit in Figure 22(a), the impedance and phase angle are

$$Z = \frac{RX_L}{\sqrt{R^2 + X_L^2}} = \frac{(100\ \Omega)(50\ \Omega)}{\sqrt{(100\ \Omega)^2 + (50\ \Omega)^2}} = \mathbf{44.7\ \Omega}$$

$$\theta = \tan^{-1}\left(\frac{R}{X_L}\right) = \tan^{-1}\left(\frac{100\ \Omega}{50\ \Omega}\right) = \mathbf{63.4°}$$

For the circuit in Figure 22(b),

$$Z = \frac{(1.0\ \text{k}\Omega)(2.0\ \text{k}\Omega)}{\sqrt{(1.0\ \text{k}\Omega)^2 + (2.0\ \text{k}\Omega)^2}} = \mathbf{894\ \Omega}$$

$$\theta = \tan^{-1}\left(\frac{1.0\ \text{k}\Omega}{2.0\ \text{k}\Omega}\right) = \mathbf{26.6°}$$

The voltage leads the current, compared to the parallel *RC* case where the voltage lags the current.

Related Problem In a parallel *RL* circuit $R = 10\ \text{k}\Omega$ and $X_L = 14\ \text{k}\Omega$. Find Z and θ.

Conductance, Susceptance, and Admittance

Conductance (G) is the reciprocal of resistance, susceptance (B) is the reciprocal of reactance, and admittance (Y) is the reciprocal of impedance.

www.EngineeringBooksPdf.com

For parallel *RL* circuits, **conductance** (***G***) is expressed as

$$G = \frac{1}{R} \qquad \text{Equation 11}$$

Inductive susceptance (B_L) is expressed as

$$B_L = \frac{1}{X_L} \qquad \text{Equation 12}$$

Admittance (***Y***) is expressed as

$$Y = \frac{1}{Z} \qquad \text{Equation 13}$$

As with the *RC* circuit, the unit for G, B_L, and Y is the siemens (S).

In the basic parallel *RL* circuit shown in Figure 23(a), the total admittance is the phasor sum of the conductance and the inductive susceptance, as shown in part (b).

$$Y_{tot} = \sqrt{G^2 + B_L^2} \qquad \text{Equation 14}$$

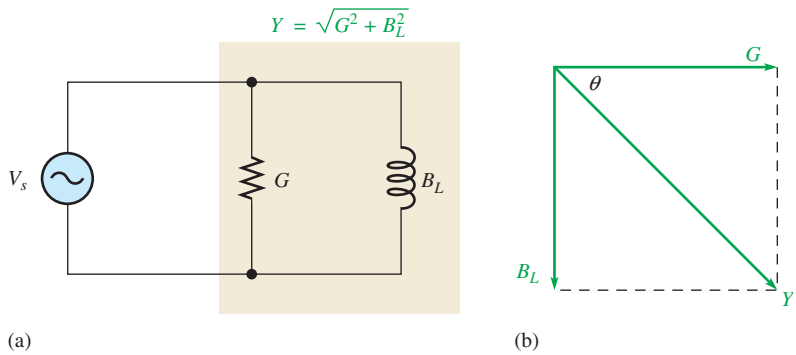

◀ **FIGURE 23**

Admittance in a parallel *RL* circuit.

EXAMPLE 9

Determine the total admittance for the circuit in Figure 24; then convert it to impedance.

▶ **FIGURE 24**

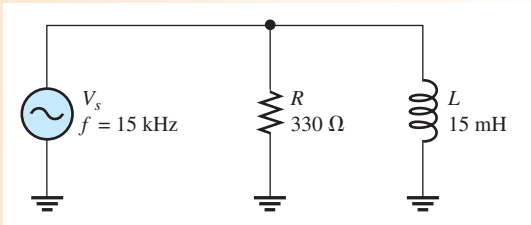

Solution To determine Y, first calculate the values for G and B_L. Since $R = 330\ \Omega$,

$$G = \frac{1}{R} = \frac{1}{330\ \Omega} = 3.03\ \text{mS}$$

The inductive reactance is

$$X_L = 2\pi fL = 2\pi(15\ \text{kHz})(15\ \text{mH}) = 1.41\ \text{k}\Omega$$

The inductive susceptance is

$$B_L = \frac{1}{X_L} = \frac{1}{1.41\ \text{k}\Omega} = 0.707\ \text{mS}$$

www.EngineeringBooksPdf.com

Therefore, the total admittance is

$$Y_{tot} = \sqrt{G^2 + B_L^2} = \sqrt{(3.03\text{ mS})^2 + (0.707\text{ mS})^2} = \mathbf{3.11\text{ mS}}$$

Convert to impedance.

$$Z = \frac{1}{Y_{tot}} = \frac{1}{3.11\text{ mS}} = \mathbf{321\ \Omega}$$

Related Problem What is the total admittance of the circuit in Figure 24 if f is decreased to 5 kHz?

SECTION 4 CHECKUP

1. If $Y = 50$ mS, what is the value of Z?
2. In a certain parallel RL circuit, $R = 470\ \Omega$ and $X_L = 750\ \Omega$. Determine the admittance.
3. In the circuit of Question 2, does the total current lead or lag the source voltage and by what phase angle?

5 ANALYSIS OF PARALLEL *RL* CIRCUITS

Ohm's law and Kirchhoff's current law are used in the analysis of RL circuits. Current and voltage relationships in a parallel RL circuit are examined.

After completing this section, you should be able to

- **Analyze a parallel *RL* circuit**
  - Apply Ohm's law and Kirchhoff's current law to parallel RL circuits
  - Determine total current and phase angle

The following example applies Ohm's law to the analysis of a parallel RL circuit.

EXAMPLE 10

Determine the total current and the phase angle in the circuit of Figure 25.

▶ FIGURE 25

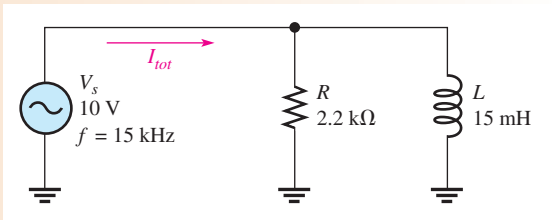

Solution First, determine the total admittance. The inductive reactance is

$$X_L = 2\pi fL = 2\pi(15\text{ kHz})(15\text{ mH}) = 1.41\text{ k}\Omega$$

The conductance is

$$G = \frac{1}{R} = \frac{1}{2.2\text{ k}\Omega} = 455\ \mu\text{S}$$

www.EngineeringBooksPdf.com

The inductive susceptance is

$$B_L = \frac{1}{X_L} = \frac{1}{1.41\ \text{k}\Omega} = 709\ \mu\text{S}$$

Therefore, the total admittance is

$$Y_{tot} = \sqrt{G^2 + B_L^2} = \sqrt{(455\ \mu\text{S})^2 + (709\ \mu\text{S})^2} = 842\ \mu\text{S}$$

Next, use Ohm's law to calculate the total current.

$$I_{tot} = VY_{tot} = (10\ \text{V})(842\ \mu\text{S}) = \mathbf{8.42\ mA}$$

The phase angle is

$$\theta = \tan^{-1}\left(\frac{R}{X_L}\right) = \tan^{-1}\left(\frac{2.2\ \text{k}\Omega}{1.41\ \text{k}\Omega}\right) = \mathbf{57.3°}$$

The total current is 8.42 mA, and it lags the source voltage by 57.3°.

Related Problem Determine the total current and the phase angle if the frequency is reduced to 8.0 kHz in Figure 25.

Open Multisim file E12-10. Measure the total current and each branch current. Change the frequency to 8.0 kHz and measure I_{tot}.

Phase Relationships of the Currents and Voltages

Figure 26(a) shows all the currents and voltages in a basic parallel *RL* circuit. As you can see, the source voltage, V_s, appears across both the resistive and the inductive branches, so V_s, V_R, and V_L are all in phase and of the same magnitude. The total current, I_{tot}, divides at the junction into the two branch currents, I_R and I_L. The current and voltage phasor diagram is shown in Figure 26(b).

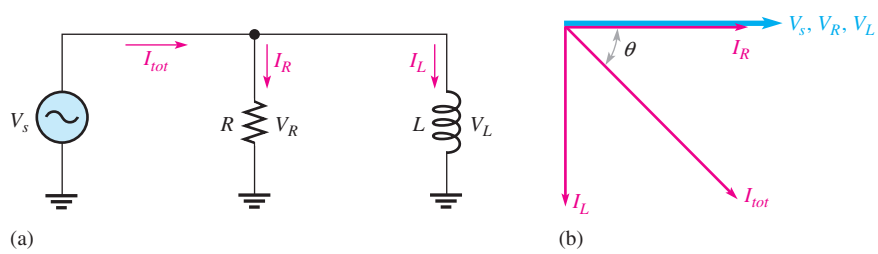

▲ **FIGURE 26**

Currents and voltages in a parallel *RL* circuit. The current directions shown in part (a) are instantaneous and, of course, reverse when the source voltage reverses during each cycle.

The current through the resistor is in phase with the voltage. The current through the inductor lags the voltage and the resistor current by 90°. By Kirchhoff's current law, the total current is the phasor sum of the two branch currents. The total current is expressed as

$$I_{tot} = \sqrt{I_R^2 + I_L^2} \qquad \text{Equation 15}$$

The phase angle between the resistor current and the total current is

$$\theta = \tan^{-1}\left(\frac{I_L}{I_R}\right) \qquad \text{Equation 16}$$

www.EngineeringBooksPdf.com

EXAMPLE 11

For the circuit in Figure 25, draw the current phasor diagram to show the phase relationships between the currents and the source voltage.

Solution The conductance, susceptance, admittance, total current, and phase angle were calculated in Example 10.

$$G = 455\ \mu\text{S}$$
$$B_L = 709\ \mu\text{S}$$
$$Y_{tot} = 842\ \mu\text{S}$$
$$I_{tot} = 8.42\ \text{mA}$$
$$\theta = 57.3°$$

The branch currents are

$$I_R = GV = (455\ \mu\text{S})(10\ \text{V}) = 4.55\ \text{mA (in phase with } V_s)$$
$$I_L = B_L V = (709\ \mu\text{S})(10\ \text{V}) = 7.09\ \text{mA (lags } V_s \text{ by } 90°)$$

The current phasor diagram is shown in Figure 27. The blue phasor represents the voltage in the circuit.

▶ FIGURE 27

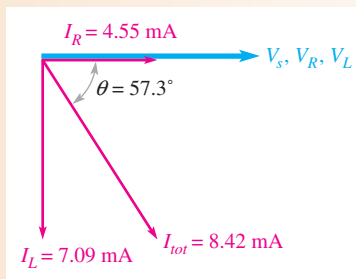

Related Problem Find I_{tot} for the circuit in Figure 25 if a second 15 mH inductor is in parallel with the first one.

SECTION 5 CHECKUP

1. The admittance of a parallel *RL* circuit is 4 mS, and the source voltage is 8 V. What is the total current?
2. In a certain parallel *RL* circuit, the resistor current is 12 mA, and the inductor current is 20 mA. Determine the phase angle and the total current.
3. What is the phase angle between the inductor current and the source voltage in a parallel *RL* circuit?

6 ANALYSIS OF SERIES-PARALLEL *RL* CIRCUITS

The concepts studied in the previous sections are used to analyze circuits with combinations of both series and parallel *R* and *L* components.

After completing this section, you should be able to

- **Analyze series-parallel *RL* circuits**
  - Determine total impedance and phase angle
  - Calculate currents and voltages

www.EngineeringBooksPdf.com

The following two examples illustrate the procedures used to analyze a series-parallel reactive circuit.

EXAMPLE 12

In the series-parallel *RL* circuit of Figure 28, determine the values of the following:

(a) Z_{tot} **(b)** I_{tot} **(c)** θ

▶ **FIGURE 28**

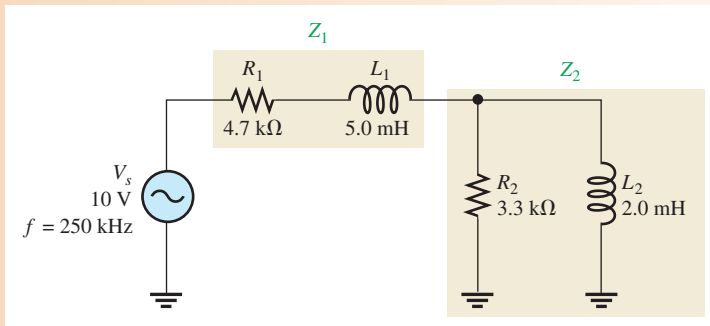

Solution

(a) First, calculate the magnitudes of the inductive reactances.

$$X_{L1} = 2\pi f L_1 = 2\pi(250\text{ kHz})(5.0\text{ mH}) = 7.85\text{ k}\Omega$$
$$X_{L2} = 2\pi f L_2 = 2\pi(250\text{ kHz})(2.0\text{ mH}) = 3.14\text{ k}\Omega$$

One approach is to find the series equivalent resistance and inductive reactance for the parallel portion of the circuit; then add the resistances ($R_1 + R_{eq}$) to get the total resistance and add the reactances ($X_{L1} + X_{L(eq)}$) to get the total reactance. From these totals, you can determine the total impedance.

Determine the impedance of the parallel portion (Z_2) as follows:

$$G_2 = \frac{1}{R_2} = \frac{1}{3.3\text{ k}\Omega} = 303\ \mu\text{S}$$
$$B_{L2} = \frac{1}{X_{L2}} = \frac{1}{3.14\text{ k}\Omega} = 318\ \mu\text{S}$$
$$Y_2 = \sqrt{G_2^2 + B_L^2} = \sqrt{(303\ \mu\text{S})^2 + (318\ \mu\text{S})^2} = 439\ \mu\text{S}$$

Then

$$Z_2 = \frac{1}{Y_2} = \frac{1}{439\ \mu\text{S}} = 2.28\text{ k}\Omega$$

The phase angle associated with the parallel portion of the circuit is

$$\theta_p = \tan^{-1}\left(\frac{R_2}{X_{L2}}\right) = \tan^{-1}\left(\frac{3.3\text{ k}\Omega}{3.14\text{ k}\Omega}\right) = 46.4°$$

The series equivalent values for the parallel portion are found in previous chapters equations, adapted for parallel *RL* circuits as follows:

$$R_{eq} = Z_2\cos\theta_p = (2.28\text{ k}\Omega)\cos(46.4°) = 1.57\text{ k}\Omega$$
$$X_{L(eq)} = Z_2\sin\theta_p = (2.28\text{ k}\Omega)\sin(46.4°) = 1.65\text{ k}\Omega$$

The total circuit resistance is

$$R_{tot} = R_1 + R_{eq} = 4.7\text{ k}\Omega + 1.57\text{ k}\Omega = 6.27\text{ k}\Omega$$

The total circuit reactance is

$$X_{L(tot)} = X_{L1} + X_{L(eq)} = 7.85\text{ k}\Omega + 1.65\text{ k}\Omega = 9.50\text{ k}\Omega$$

www.EngineeringBooksPdf.com

The total circuit impedance is

$$Z_{tot} = \sqrt{R_{tot}^2 + X_{L(tot)}^2} = \sqrt{(6.27\,\text{k}\Omega)^2 + (9.50\,\text{k}\Omega)^2} = \mathbf{11.4\,k\Omega}$$

(b) Use Ohm's law to find the total current.

$$I_{tot} = \frac{V_s}{Z_{tot}} = \frac{10\text{ V}}{11.4\,\text{k}\Omega} = \mathbf{877\ \mu A}$$

(c) To find the phase angle, view the circuit as a series combination of R_{tot} and $X_{L(tot)}$. The phase angle by which I_{tot} lags V_s is

$$\theta = \tan^{-1}\left(\frac{X_{L(tot)}}{R_{tot}}\right) = \tan^{-1}\left(\frac{9.50\,\text{k}\Omega}{6.27\,\text{k}\Omega}\right) = \mathbf{56.6°}$$

Related Problem **(a)** Determine the voltage across the series part of the circuit in Figure 28.

(b) Determine the voltage across the parallel part of the circuit.

Open Multisim file E12-12. Measure the current through each component. Measure the voltage across Z_1 and Z_2.

EXAMPLE 13

Determine the voltage across each component in Figure 29. Draw a current and voltage phasor diagram.

▶ **FIGURE 29**

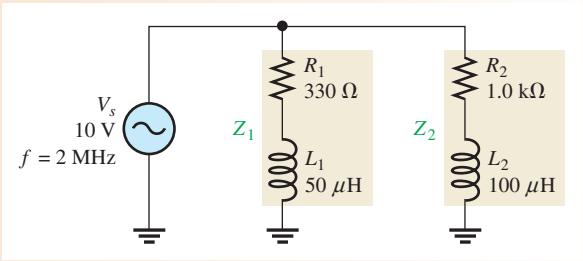

Solution First, calculate X_{L1} and X_{L2}.

$$X_{L1} = 2\pi f L_1 = 2\pi(2\text{ MHz})(50\ \mu\text{H}) = 628\ \Omega$$
$$X_{L2} = 2\pi f L_2 = 2\pi(2\text{ MHz})(100\ \mu\text{H}) = 1.26\text{ k}\Omega$$

Now, determine the impedance of each branch.

$$Z_1 = \sqrt{R_1^2 + X_{L1}^2} = \sqrt{(330\ \Omega)^2 + (628\ \Omega)^2} = 709\ \Omega$$
$$Z_2 = \sqrt{R_2^2 + X_{L2}^2} = \sqrt{(1.0\text{ k}\Omega)^2 + (1.26\text{ k}\Omega)^2} = 1.61\text{ k}\Omega$$

Calculate each branch current.

$$I_1 = \frac{V_s}{Z_1} = \frac{10\text{ V}}{709\ \Omega} = 14.1\text{ mA}$$
$$I_2 = \frac{V_s}{Z_2} = \frac{10\text{ V}}{1.61\text{ k}\Omega} = 6.21\text{ mA}$$

www.EngineeringBooksPdf.com

Now, use Ohm's law to find the voltage across each component.

$$V_{R1} = I_1R_1 = (14.1\text{ mA})(330\ \Omega) = \mathbf{4.65\ V}$$
$$V_{L1} = I_1X_{L1} = (14.1\text{ mA})(628\ \Omega) = \mathbf{8.85\ V}$$
$$V_{R2} = I_2R_2 = (6.21\text{ mA})(1.0\text{ k}\Omega) = \mathbf{6.21\ V}$$
$$V_{L2} = I_2X_{L2} = (6.21\text{ mA})(1.26\text{ k}\Omega) = \mathbf{7.82\ V}$$

Now determine the values of the angles associated with each branch current.

$$\theta_1 = \tan^{-1}\left(\frac{X_{L1}}{R_1}\right) = \tan^{-1}\left(\frac{628\ \Omega}{330\ \Omega}\right) = 62.3°$$
$$\theta_2 = \tan^{-1}\left(\frac{X_{L2}}{R_2}\right) = \tan^{-1}\left(\frac{1.26\text{ k}\Omega}{1.0\text{ k}\Omega}\right) = 51.6°$$

Thus, I_1 lags V_s by 62.3°, and I_2 lags V_s by 51.6°, as indicated in Figure 30(a).

▶ FIGURE 30

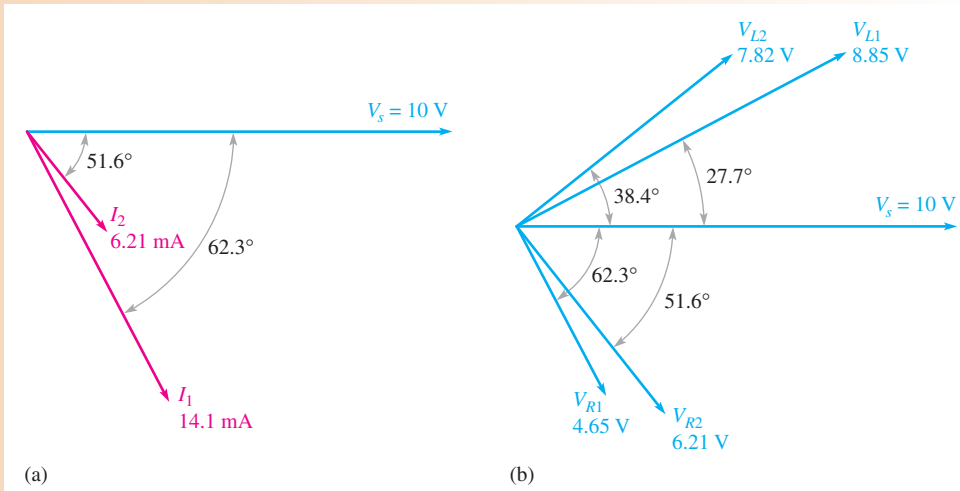

The phase relationships of the voltages are determined as follows:

- V_{R1} is in phase with I_1 and therefore lags V_s by 62.3°.
- V_{L1} leads I_1 by 90°, so its angle is 90° − 62.3° = 27.7°.
- V_{R2} is in phase with I_2 and therefore lags V_s by 51.6°.
- V_{L2} leads I_2 by 90°, so its angle is 90° − 51.6° = 38.4°.

These phase relationships are shown in Figure 30(b).

Related Problem What effect does an increase in frequency have on the total current in Figure 30?

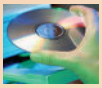

Open Multisim file E12-13. Measure the voltage across each component and compare to the calculated values.

SECTION 6 CHECKUP

1. Determine the total current for the circuit in Figure 29. *Hint:* Find the sum of the horizontal components of I_1 and I_2 and the sum of the vertical components of I_1 and I_2. Then apply the Pythagorean theorem to get I_{tot}.
2. What is the total impedance of the circuit in Figure 29?

www.EngineeringBooksPdf.com

7 POWER IN *RL* CIRCUITS

In a purely resistive ac circuit, all of the energy delivered by the source is dissipated in the form of heat by the resistance. In a purely inductive ac circuit, all of the energy delivered by the source is stored by the inductor in its magnetic field during a portion of the voltage cycle and then returned to the source during another portion of the cycle so that there is no net energy conversion to heat. When there is both resistance and inductance, some of the energy is alternately stored and returned by the inductance and some is dissipated by the resistance. The amount of energy converted to heat is determined by the relative values of the resistance and the inductive reactance.

After completing this section, you should be able to

- **Determine power in *RL* circuits**
  - Explain true and reactive power
  - Draw the power triangle
  - Define *power factor*
  - Explain power factor correction

When the resistance in a series *RL* circuit is greater than the inductive reactance, more of the total energy delivered by the source is dissipated by the resistance than is stored and returned by the inductor. When the reactance is greater than the resistance, more of the total energy is stored and returned than is converted to heat.

As you know, the power dissipated in a resistor is called the true power. The power in an inductor is **reactive power** and is expressed as

Equation 17

$$P_r = I^2 X_L$$

The generalized power triangle for a series *RL* circuit is shown in Figure 31. The **apparent power, P_a**, is the resultant of the true power, P_{true}, and the reactive power, P_r.

▶ FIGURE 31

Generalized power triangle for an *RL* circuit.

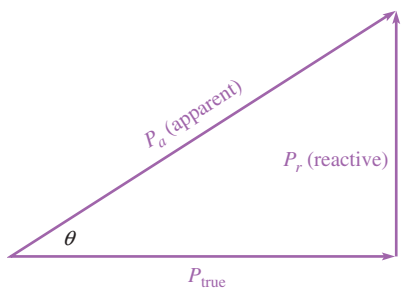

EXAMPLE 14

Determine the power factor, the true power, the reactive power, and the apparent power in Figure 32.

▶ FIGURE 32

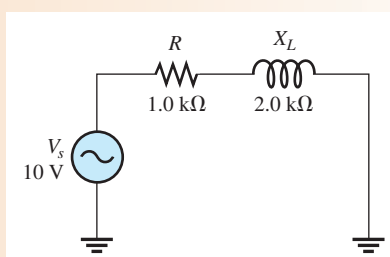

www.EngineeringBooksPdf.com

Solution The impedance of the circuit is

$$Z = \sqrt{R^2 + X_L^2} = \sqrt{(1.0\,\text{k}\Omega)^2 + (2.0\,\text{k}\Omega)^2} = 2.24\,\text{k}\Omega$$

The current is

$$I = \frac{V_s}{Z} = \frac{10\,\text{V}}{2.24\,\text{k}\Omega} = 4.46\,\text{mA}$$

The phase angle is

$$\theta = \tan^{-1}\left(\frac{X_L}{R}\right) = \tan^{-1}\left(\frac{2.0\,\text{k}\Omega}{1.0\,\text{k}\Omega}\right) = 63.4°$$

Power factor was defined in previous chapters equation. The power factor is

$$PF = \cos\theta = \cos(63.4°) = \mathbf{0.448}$$

The true power is

$$P_{\text{true}} = V_s I \cos\theta = (10\,\text{V})(4.46\,\text{mA})(0.448) = \mathbf{20\,mW}$$

The reactive power is

$$P_r = I^2 X_L = (4.46\,\text{mA})^2(2.0\,\text{k}\Omega) = \mathbf{39.8\,mVAR}$$

The apparent power is

$$P_a = I^2 Z = (4.46\,\text{mA})^2(2.24\,\text{k}\Omega) = \mathbf{44.6\,mVA}$$

Related Problem If the frequency in Figure 32 is increased, what happens to P_{true}, P_r, and P_a?

Significance of the Power Factor

Recall that the **power factor** equals the cosine of θ ($PF = \cos\theta$). As the phase angle between the source voltage and the total current increases, the power factor decreases, indicating an increasingly reactive circuit. A smaller power factor indicates less true power and more reactive power. The power factor of inductive loads is called a *lagging power factor* because the current lags the source voltage.

The power factor (PF) is important in determining how much useful power (true power) is transferred to a load. The highest power factor is 1, which indicates that all of the current to a load is in phase with the voltage (resistive). When the power factor is 0, all of the current to a load is 90° out of phase with the voltage (reactive).

Generally, a power factor as close to 1 as possible is desirable because then most of the power transferred from the source to the load is useful or true power. True power goes only one way—from source to load—and performs work on the load in terms of energy dissipation. Reactive power simply goes back and forth between the source and the load with no net work being done. Energy must be used in order for work to be done.

Many practical loads have inductance as a result of their particular function, and it is essential for their proper operation. Examples are transformers, electric motors, and speakers, to name a few. Therefore, inductive (and capacitive) loads are important considerations.

To see the effect of the power factor on system requirements, refer to Figure 33. This figure shows a representation of a typical inductive load consisting effectively of inductance and resistance in parallel. Part (a) shows a load with a relatively low power factor (0.75), and part (b) shows a load with a relatively high power factor (0.95). Although both loads, as indicated by the wattmeters, dissipate the same amount of true power, the low power factor load in Figure 33(a) draws more current from the source than does the high power factor load in Figure 33(b), as indicated by the ammeters. Therefore,

www.EngineeringBooksPdf.com

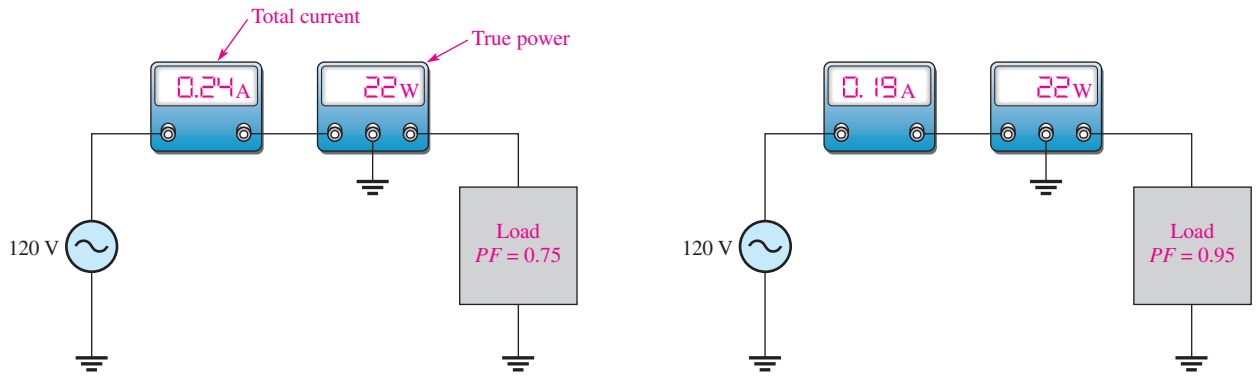

(a) A lower power factor means more total current for a given power dissipation (watts). A larger source is required to deliver the true power (watts).

(b) A higher power factor means less total current for a given power dissipation. A smaller source can deliver the same true power (watts).

▲ **FIGURE 33**

Illustration of the effect of the power factor on system requirements such as source rating (VA) and conductor size. Although the loads are different, they dissipate the same true power.

the source in part (a) must have a higher VA rating than the one in part (b). Also, the lines connecting the source to the load must be a larger wire gauge than those in part (b), a condition that becomes significant when very long transmission lines are required, such as in power distribution.

Figure 33 has demonstrated that a higher power factor is an advantage in delivering power more efficiently to a load. Also, because the electric company charges for apparent power, it is less expensive to have a high power factor.

Power Factor Correction The power factor of an inductive load can be increased by the addition of a capacitor in parallel, as shown in Figure 34. The capacitor compensates for the phase lag of the total current by creating a capacitive component of current that is 180° out of phase with the inductive component. This has a canceling effect and reduces the phase angle and the total current, as illustrated in the figure. This causes the power factor to increase.

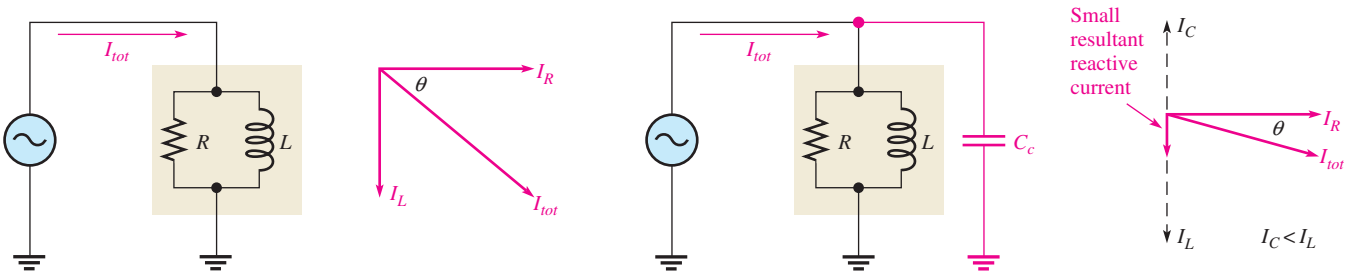

(a) Total current is the resultant of I_R and I_L.

(b) I_C subtracts from I_L, leaving only a small reactive current, thus decreasing I_{tot} and the phase angle.

▲ **FIGURE 34**

Example of how the power factor can be increased by the addition of a compensating capacitor (C_c). As θ decreases, *PF* increases.

In industrial environments, three-phase motors, arc welders, and similar loads are common and tend to look like inductive loads, which cause the current to lag behind the voltage in each phase. The generalized power triangle, shown in Figure 31, can be applied to three-phase circuits by considering each phase as having true power and apparent power components. Ideally, the current waveform must track the voltage waveform for each phase

www.EngineeringBooksPdf.com

(implying $PF = 1$), and the power drawn from each phase must be the same (this is referred to a *load balancing*.) With a balanced load, the capacitor-correction method can be used by connecting a compensating capacitor across each line, as was shown for the single-phase case.

In some cases, the load on each phase is unbalanced; different loads may cause distortion of the current waveform. Distortion is caused by nonlinear loads such as switched-mode power supplies, discussed in the next section. Loads that are intermittently on (such as arc welders) can also change the required power factor correction. These cases require more complicated solutions than just a compensating capacitor in each line; active circuits are available that can vary the phase angle.

SECTION 7 CHECKUP

1. To which component in an *RL* circuit is the power dissipation due?
2. Calculate the power factor when $\theta = 50°$.
2. A certain series *RL* circuit consists of a 470 Ω resistor and an inductive reactance of 620 Ω at the operating frequency. Determine P_{true}, P_r, and P_a when $I = 100$ mA.

8 BASIC APPLICATIONS

Two applications of *RL* circuits are covered in this section. The first application is a basic frequency selective (filter) circuit. The second application is the switching regulator, a widely used circuit in power supplies because of its high efficiency. The switching regulator uses other components, but the *RL* circuit is emphasized.

After completing this section, you should be able to

- Describe two examples of *RL* circuit applications
  - Discuss how the *RL* circuit operates as a filter
  - Discuss the advantage of an inductor in a switching regulator

The *RL* Circuit as a Filter

Like *RC* circuits, series *RL* circuits also exhibit a frequency-selective characteristic.

Low-Pass Characteristic You have seen what happens to the phase angle and the output voltage in a series *RC* lag circuit. In terms of the filtering action of the series *RL* circuit, the variation in the magnitude of the output voltage as a function of frequency is important.

Figure 35 shows the filtering action of a series *RL* circuit using a specific series of measurements in which the frequency starts at 100 Hz and is increased in increments up to 20 kHz. At each value of frequency, the output voltage is measured. As you can see, the inductive reactance increases as frequency increases, thus causing less voltage to be dropped across the resistor while the input voltage is held at a constant 10 V throughout each step. The **frequency response** curve for these particular values would appear similar to a response curve for the low-pass *RC* circuit.

High-Pass Characteristic To illustrate *RL* high-pass filtering action, Figure 36 shows a series of specific measurements. The frequency starts at 10 Hz and is increased in increments up to 10 kHz. As you can see, the inductive reactance increases as the frequency increases, thus causing more voltage to be dropped across the inductor. Again, when the values are plotted, the response curve is similar to the one for a high-pass *RC* circuit.

www.EngineeringBooksPdf.com

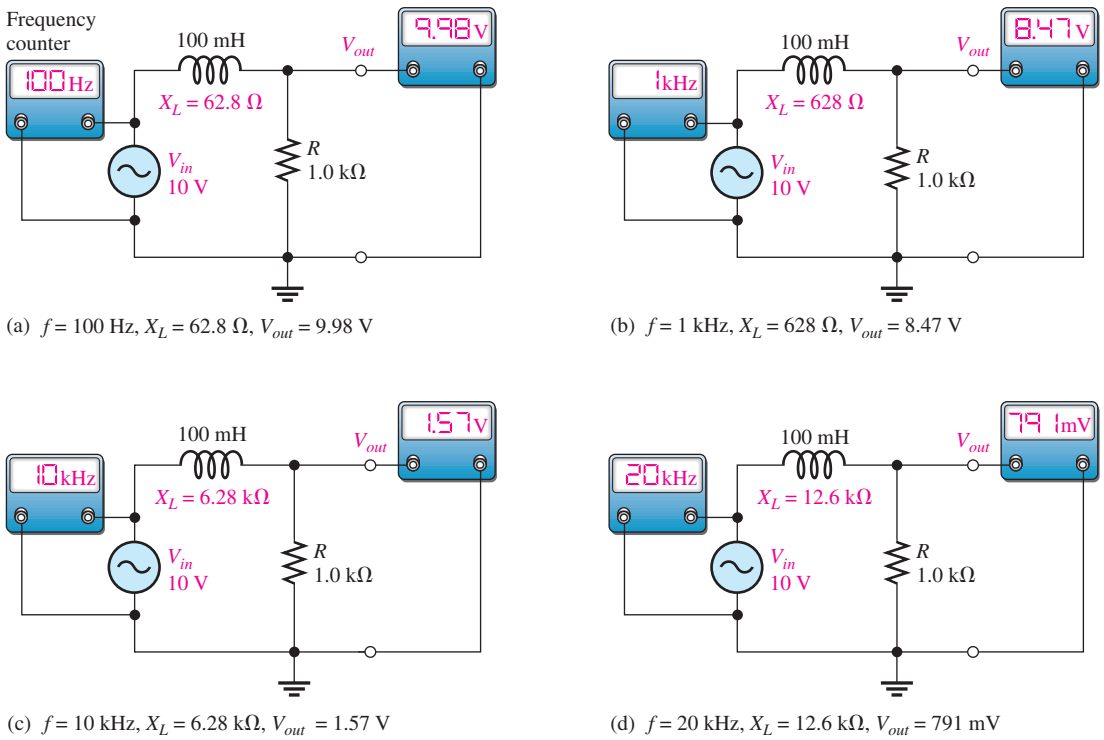

(a) f = 100 Hz, X_L = 62.8 Ω, V_{out} = 9.98 V

(b) f = 1 kHz, X_L = 628 Ω, V_{out} = 8.47 V

(c) f = 10 kHz, X_L = 6.28 kΩ, V_{out} = 1.57 V

(d) f = 20 kHz, X_L = 12.6 kΩ, V_{out} = 791 mV

▲ **FIGURE 35**

Example of low-pass filtering action. Winding resistance has been neglected. As the input frequency increases, the output voltage decreases.

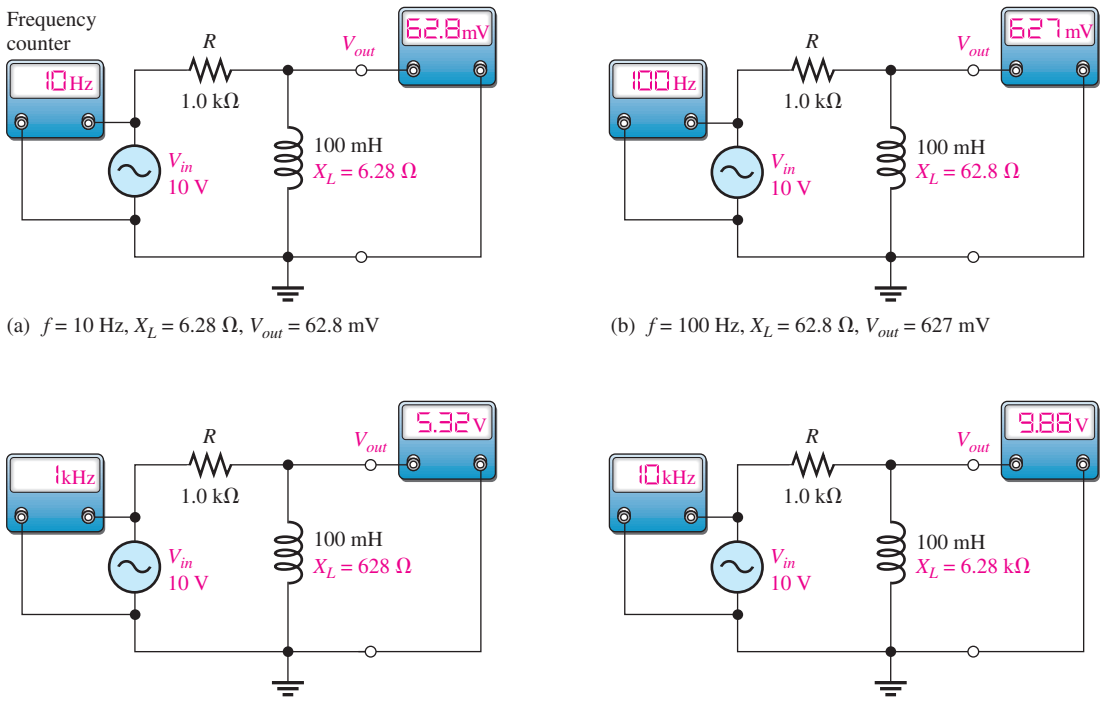

(a) f = 10 Hz, X_L = 6.28 Ω, V_{out} = 62.8 mV

(b) f = 100 Hz, X_L = 62.8 Ω, V_{out} = 627 mV

(c) f = 1 kHz, X_L = 628 Ω, V_{out} = 5.32 V

(d) f = 10 kHz, X_L = 6.28 kΩ, V_{out} = 9.88 V

▲ **FIGURE 36**

Example of high-pass filtering action. Winding resistance has been neglected. As the input frequency increases, the output voltage increases.

www.EngineeringBooksPdf.com

The Cutoff Frequency of an RL Circuit The frequency at which the inductive reactance equals the resistance in a low-pass or high-pass *RL* circuit is called the **cutoff frequency** and is designated f_c. This condition is expressed as $2\pi f_c L = R$. Solving for f_c results in the following formula:

$$f_c = \frac{R}{2\pi L}$$

Equation 18

As with the *RC* circuit, the output voltage is 70.7% of its maximum value at f_c. In a high-pass circuit, all frequencies above f_c are considered to be passed and all those below f_c are considered to be rejected. The reverse, of course, is true for a low-pass circuit. **Bandwidth** applies to both *RC* and *RL* series circuits.

The Switching Regulator

In high-frequency switching power supplies, small inductors are used as an essential part of the filter section. A switching power supply is much more efficient at converting ac to dc than any other type of supply. For this reason it is widely used in computers and other electronic systems. A switching regulator precisely controls the dc voltage. One type of switching regulator is shown in Figure 37. It uses a transistor switch to change unregulated dc to high frequency pulses. The output is the average value of the pulses. The pulse width is controlled by the pulse width modulator, which rapidly turns on and off a transistor switch and then is filtered by the filter section to produce regulated dc (Ripple in the figure is exaggerated to show the concept). The pulse width modulator can increase pulse width if the output drops, or decrease it if the output rises, thus maintaining a constant average output for varying conditions.

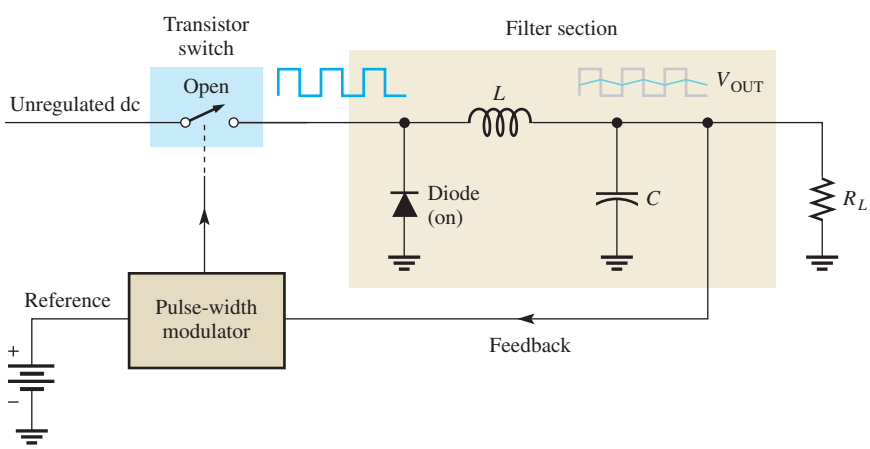

◀ **FIGURE 37**

Diagram showing an inductor in a switching regulator.

Figure 38 illustrates the basic filtering action. The filter consists of a diode, an inductor, and a capacitor. The diode is a one-way device for current that you will study in a devices course. In this application the diode acts as an on-off switch that allows current in only one direction.

An important component of the filter section is the inductor, which in this type of regulator will always have current in it. The average voltage and the load resistor determine the amount of current. Recall that Lenz's law states that an induced voltage is created across a coil that opposes a *change* in current. When the transistor switch is closed, the pulse is high and current is through the inductor and the load as shown in Figure 38(a). The diode is off at this time. Notice that the inductor has an induced voltage across it that opposes a change in current. When the pulse goes low, as in Figure 38(b), the transistor is off and the inductor develops a voltage in the opposite direction than before. The diode acts as a closed switch, which provides a path for current. This action tends to keep the load current constant. The capacitor adds to this smoothing action by charging and discharging a small amount during the process.

www.EngineeringBooksPdf.com

▶ **FIGURE 38**

Switching regulator action.

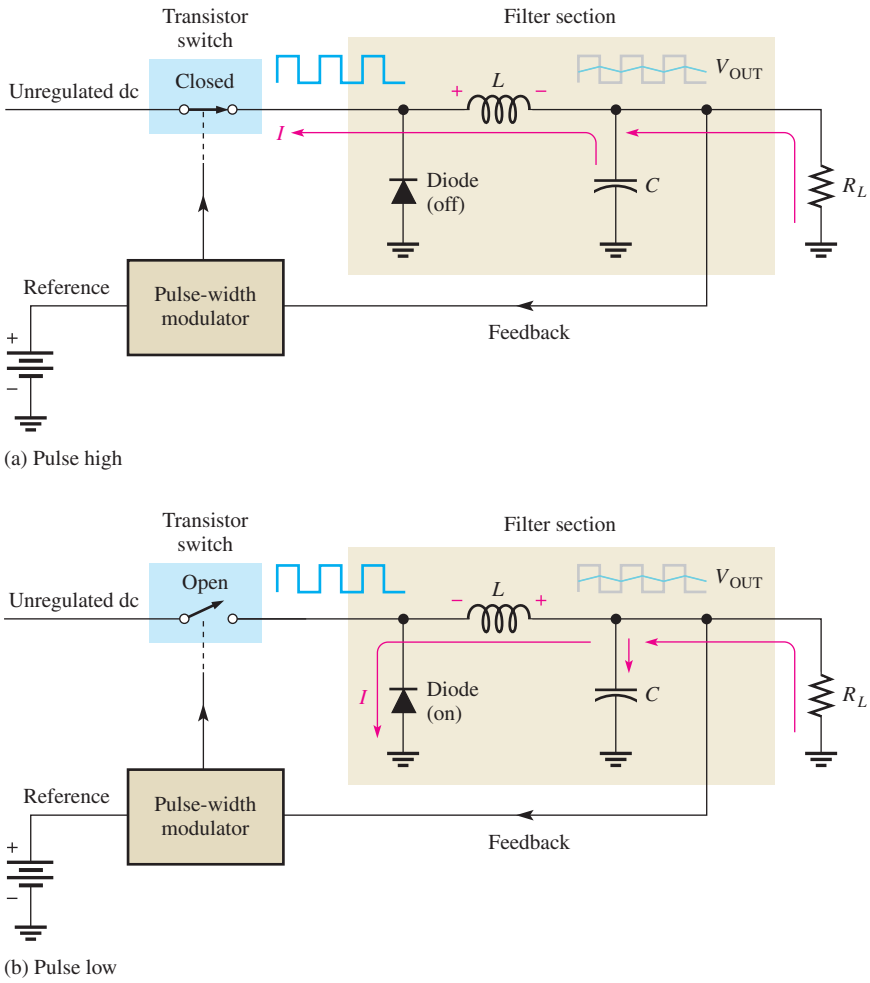

SECTION 8 CHECKUP

1. To achieve a low-pass characteristic with a series *RL* circuit, across which component is the output taken?
2. What is the major advantage of a switching regulator?
3. What happens to the pulse width of a switching regulator if the output voltage drops?

9 TROUBLESHOOTING

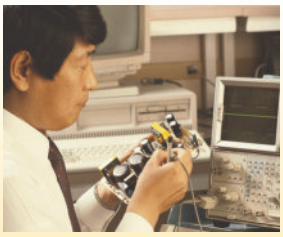

Typical component failures have an effect on the frequency response of basic *RL* circuits. An example of troubleshooting using the APM (analysis, planning, and measurement) method is presented.

After completing this section, you should be able to

- **Troubleshoot *RL* circuits**
  - Find an open inductor
  - Find an open resistor
  - Find an open in a parallel circuit

www.EngineeringBooksPdf.com

Effect of an Open Inductor The most common failure mode for inductors occurs when the winding opens as a result of excessive current or a mechanical contact failure. It is easy to see how an open coil affects the operation of a basic series *RL* circuit, as shown in Figure 39. Obviously, there is no path for current, so the resistor voltage is zero and the total source voltage appears across the open inductor.

Effect of an Open Resistor When the resistor is open, there is no current, and the inductor voltage is zero. The total input voltage appears across the open resistor, as shown in Figure 40.

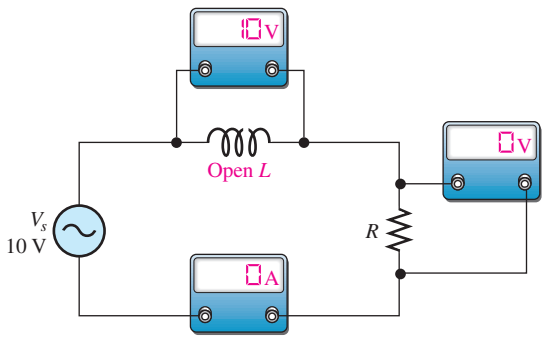

▲ **FIGURE 39**

Effect of an open coil.

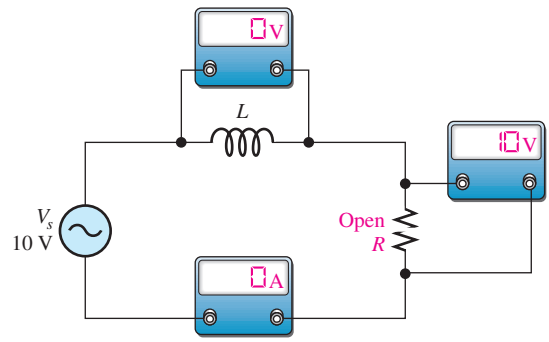

▲ **FIGURE 40**

Effect of an open resistor.

Open Components in Parallel Circuits In a parallel *RL* circuit, an open resistor or inductor will cause the total current to decrease because the total impedance will increase. Obviously, the branch with the open component will have zero current. Figure 41 illustrates these conditions.

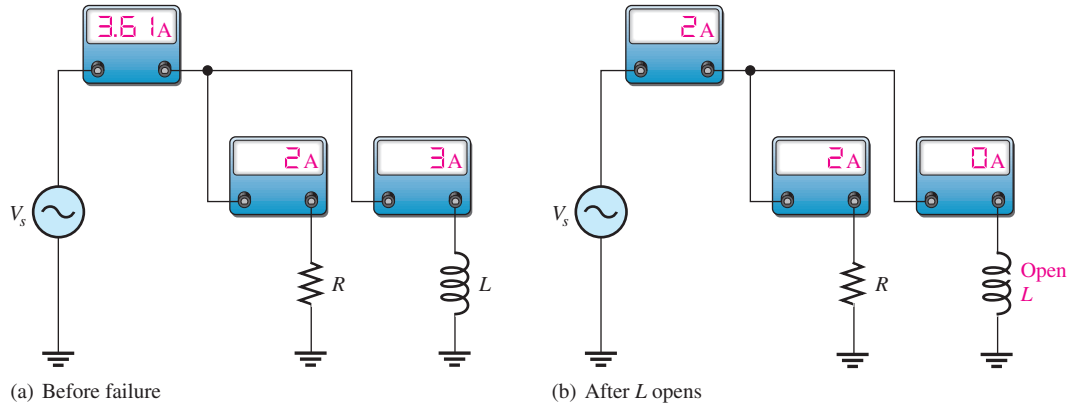

▲ **FIGURE 41**

Effect of an open component in a parallel circuit with V_s constant.

Effect of an Inductor with Shorted Windings Although a rare occurrence, it is possible for some of the windings of coils to short together as a result of damaged insulation. This failure mode is much less likely than the open coil. A sufficient number of shorted windings may result in a reduction in inductance because the inductance of a coil is proportional to the square of the number of turns.

Other Troubleshooting Considerations

The failure of a circuit to work properly is not always the result of a faulty component. A loose wire, a bad contact, or a poor solder joint can cause an open circuit. A short can be

www.EngineeringBooksPdf.com

caused by a wire clipping or solder splash. Wrong values in a circuit (such as an incorrect resistor value), the function generator set at the wrong frequency, or the wrong output connected to the circuit can cause improper operation.

Always check to make sure that the instruments are properly connected to the circuits and to a power outlet. Also, look for obvious things such as a broken or loose contact, a connector that is not completely plugged in, or a piece of wire or a solder bridge that could be shorting something out.

The following example illustrates a troubleshooting approach to a circuit containing inductors and resistors using the APM (analysis, planning, and measurement) method and half-splitting.

EXAMPLE 15

The circuit represented by the schematic in Figure 42 has no output voltage, which is across R_4. The circuit is physically constructed on a protoboard. Use your troubleshooting skills to find the problem.

▶ **FIGURE 42**

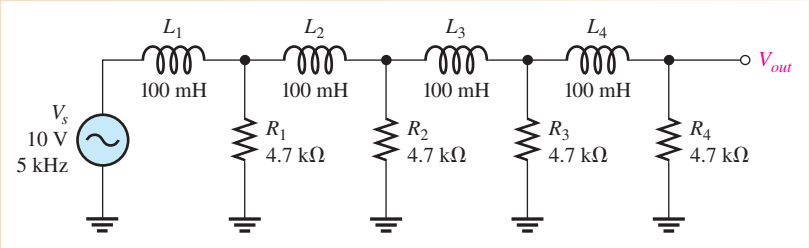

Solution Apply the APM method to this troubleshooting problem.

Analysis: First think of the possible causes for the circuit to have no output voltage.

1. There is no source voltage or the frequency is so high that the inductors appear to be open because their reactances are extremely high compared to the resistance values.
2. There is a short between one of the resistors and ground. Either a resistor could be shorted, or there could be some physical short. A shorted resistor is not a very common fault.
3. There is an open between the source and the output. This would prevent current and thus cause the output voltage to be zero. An inductor could be open, or the conductive path could be open due to a broken or loose connecting wire or a bad protoboard contact.
4. There is an incorrect component value. A resistor could be so small that the voltage across it is negligible. An inductor could be so large that its reactance at the input frequency is extremely high.

Planning: You decide to make some visual checks for problems such as the function generator power cord not plugged in or the frequency set at an incorrect value. Also, broken leads, shorted leads, as well as an incorrect resistor color code or inductor value often can be found visually. If nothing is discovered after a visual check, then you will make voltage measurements to track down the cause of the problem. You decide to use a digital oscilloscope and a DMM to make the measurements using the half-splitting technique to more quickly isolate the fault.

Measurement: Assume that you find that the function generator is plugged in and the frequency setting appears to be correct. Also, you find no visible opens or shorts during your visual check, and the component values are correct.

www.EngineeringBooksPdf.com

The first step in the measurement process is to check the voltage from the source with the scope. Assume a 10 V rms sine wave with a frequency of 5 kHz is observed at the circuit input as shown in Figure 43(a). The correct ac voltage is present, so *the first possible cause has been eliminated.*

Next, check for a short by disconnecting the source and placing the DMM (set on the ohmmeter function) across each resistor. If any resistor is shorted (unlikely), the

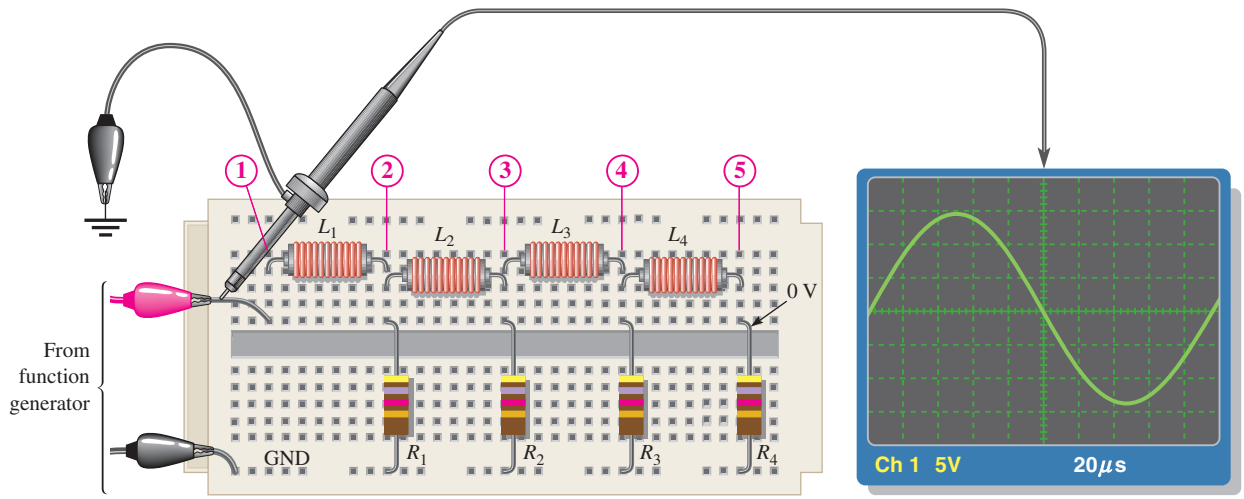

(a) Scope shows the correct voltage at the input.

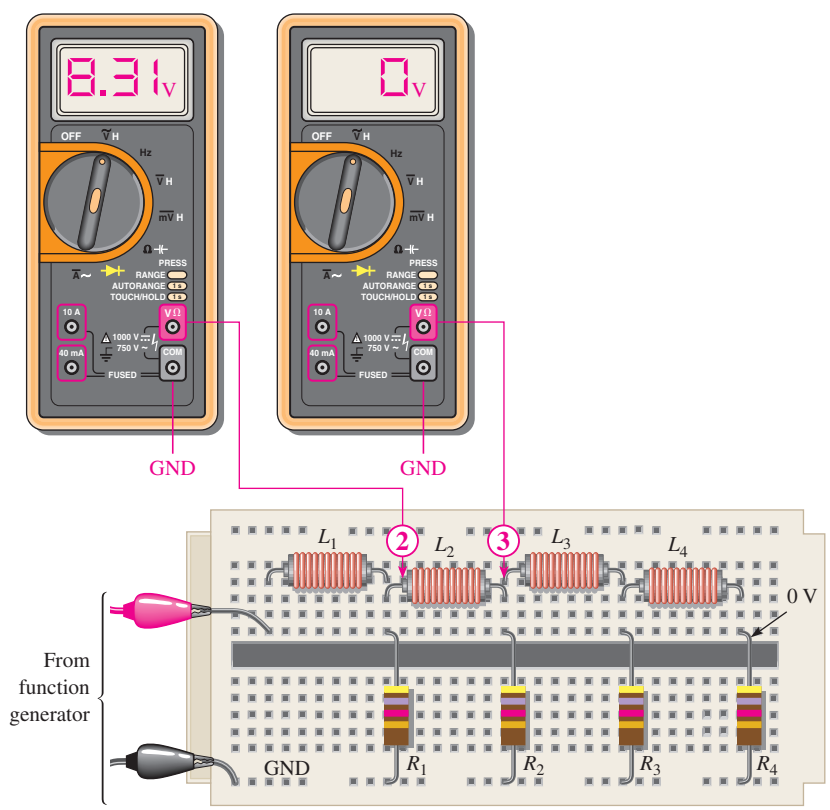

(b) A zero voltage at point ③ indicates the fault is between point ③ and the source. A reading of 8.31 V at point ② shows that L_2 is open.

▲ FIGURE 43

www.EngineeringBooksPdf.com

meter will read zero or a very small resistance. Assuming the meter readings are okay, *the second possible cause has been eliminated.*

Since the voltage has been "lost" somewhere between the input and the output, you must now look for the voltage. You reconnect the source and, using the half-splitting approach, measure the voltage at point ③ (the middle of the circuit) with respect to ground. The DMM test lead is placed on the right lead of inductor L_2, as indicated in Figure 43(b). Assume the voltage at this point is zero. This tells you that the part of the circuit to the right of point ③ is probably okay and the fault is in the circuit between point ③ and the source.

Now, you begin tracing the circuit back toward the source looking for the voltage (you could also start from the source and work forward). Placing the meter test lead on point ②, at the left lead of inductor L_2, results in a reading of 8.31 V as shown in Figure 43(b). This, of course, indicates that L_2 is open. Fortunately, in this case, a component, and not a contact on the board, is faulty. It is usually easier to replace a component than to repair a bad contact.

Related Problem Suppose you had measured 0 V at the left lead of L_2 and 10 V at the right lead of L_1. What would this have indicated?

SECTION 9 CHECKUP

1. Describe the effect of an inductor with shorted windings on the response of a series *RL* circuit.
2. In the circuit of Figure 44, indicate whether I_{tot}, V_{R1}, and V_{R2} increase or decrease as a result of *L* opening.

▶ FIGURE 44

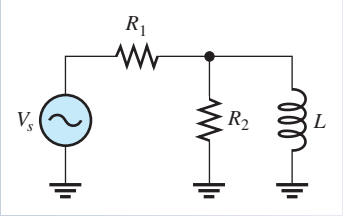

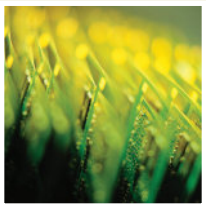

Application Assignment

PUTTING YOUR KNOWLEDGE TO WORK

You are given two sealed modules that have been removed from a communications system that is being modified. Each module has three terminals and is labeled as an *RL* circuit, but no specifications are given. Your assignment is to test the modules to determine the type of circuit and the component values.

The sealed modules have three terminals labeled IN, GND, and OUT as shown in Figure 45. You will apply your knowledge of series *RL* circuits and some basic measurements to determine the internal circuit configuration and the component values.

Step 1: Resistance Measurements of Module 1

Determine the arrangement of the components and the values of the resistor and winding resistance for module 1 indicated by the meter readings in Figure 45.

Step 2: AC Measurements of Module 1

Determine the inductance value for module 1 indicated by the test setup in Figure 46.

Step 3: Resistance Measurements of Module 2

Determine the arrangement of the components and the values of the resistor and the winding resistance for module 2 indicated by the meter readings in Figure 47.

www.EngineeringBooksPdf.com

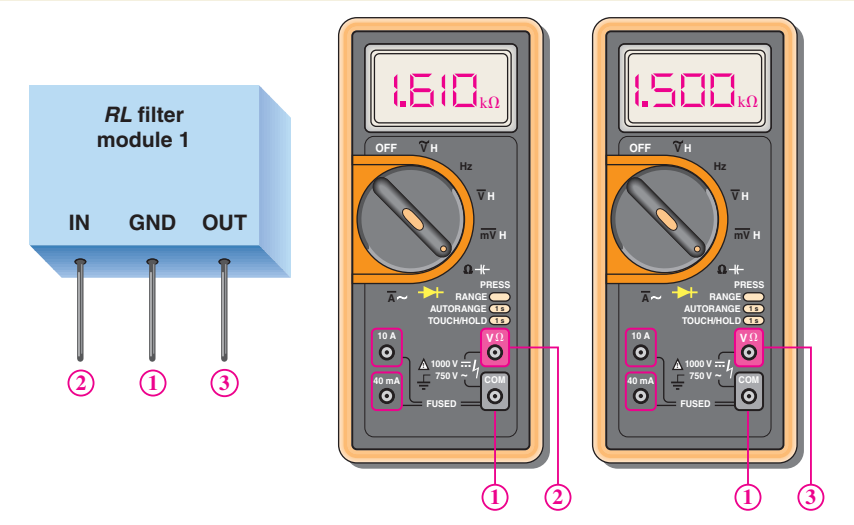

▲ FIGURE 45

Resistance measurements of module 1.

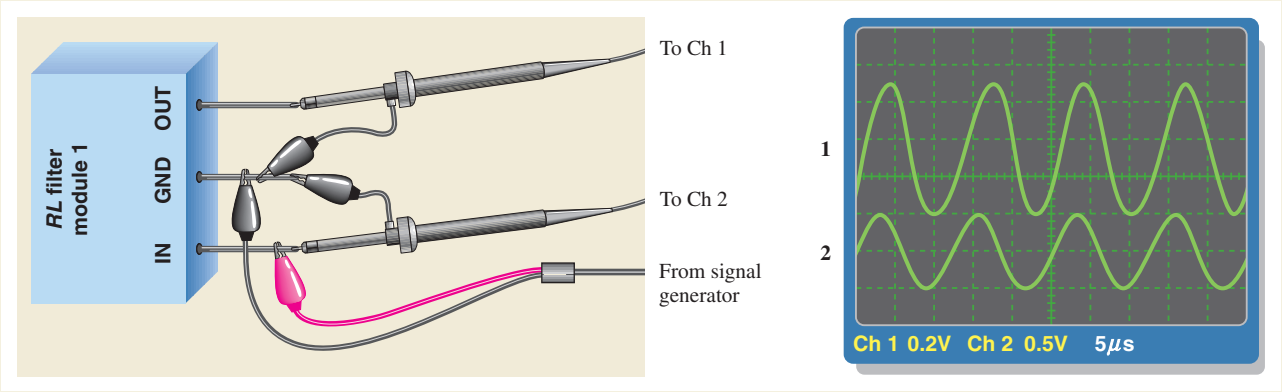

▲ FIGURE 46

AC measurements for module 1.

▶ FIGURE 47

Resistance measurements of module 2.

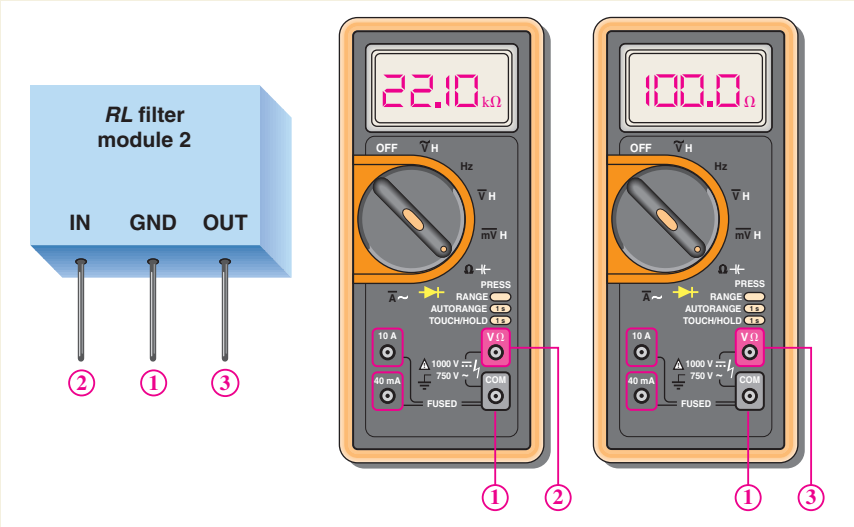

www.EngineeringBooksPdf.com

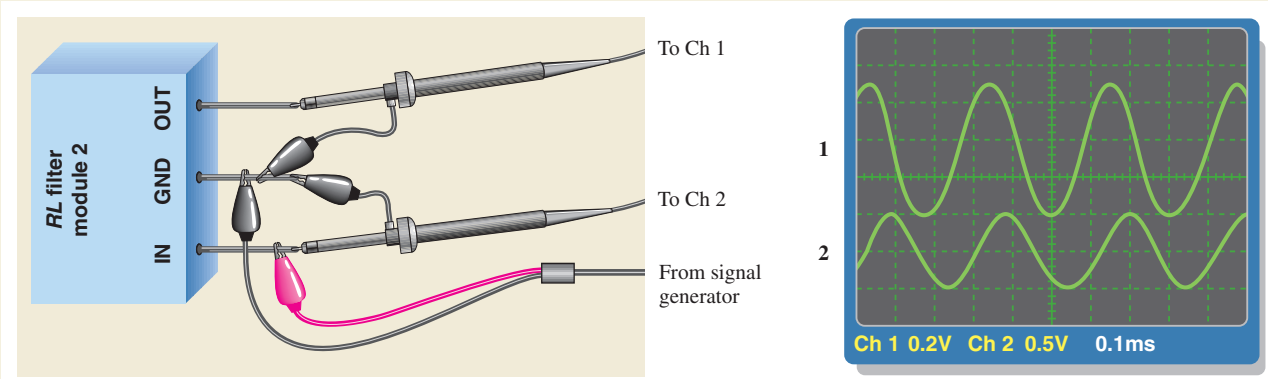

▲ **FIGURE 48**

AC measurements for module 2.

Step 4: AC Measurements of Module 2

Determine the inductance value for module 2 indicated by the test setup in Figure 48.

Review

1. If the inductor in module 1 were open, what would you measure on the output with the test setup of Figure 46?
2. If the inductor in module 2 were open, what would you measure on the output with the test setup of Figure 48?

SUMMARY

- When a sinusoidal voltage is applied to an *RL* circuit, the current and all the voltage drops are also sine waves.
- Total current in an *RL* circuit always lags the source voltage.
- The resistor voltage is always in phase with the current.
- In an ideal inductor, the voltage always leads the current by 90°.
- In an *RL* lag circuit, the output voltage lags the input voltage in phase.
- In an *RL* lead circuit, the output voltage leads the input voltage in phase.
- In an *RL* circuit, the impedance is determined by both the resistance and the inductive reactance combined.
- Impedance is expressed in units of ohms.
- The impedance of an *RL* circuit varies directly with frequency.
- The phase angle (θ) of a series *RL* circuit varies directly with frequency.
- You can determine the impedance of a circuit by measuring the source voltage and the total current and then applying Ohm's law.
- In an *RL* circuit, part of the power is resistive and part reactive.
- The phasor combination of resistive power (true power) and reactive power is called *apparent power.*
- The power factor indicates how much of the apparent power is true power.
- A power factor of 1 indicates a purely resistive circuit, and a power factor of 0 indicates a purely reactive circuit.
- In a circuit that exhibits frequency selectivity, certain frequencies are passed to the output while others are rejected.

www.EngineeringBooksPdf.com

KEY TERMS

Inductive susceptance (B_L) The reciprocal of inductive reactance. The unit is the siemens.

***RL* lag circuit** A phase shift circuit in which the output voltage, taken across the resistor, lags the input voltage by a specified angle.

***RL* lead circuit** A phase shift circuit in which the output voltage, taken across the inductor, leads the input voltage by a specified angle.

FORMULAS

1	$Z = \sqrt{R^2 + X_L^2}$	Series *RL* impedance
2	$\theta = \tan^{-1}\left(\frac{X_L}{R}\right)$	Series *RL* phase angle
3	$V_s = \sqrt{V_R^2 + V_L^2}$	Total voltage in a series *RL* circuit
4	$\theta = \tan^{-1}\left(\frac{V_L}{V_R}\right)$	Series *RL* phase angle
5	$\phi = \tan^{-1}\left(\frac{X_L}{R}\right)$	Phase angle of an *RL* lag circuit
6	$V_{out} = \left(\frac{R}{\sqrt{R^2 + X_L^2}}\right)V_{in}$	Output voltage of lag circuit
7	$\phi = 90° - \tan^{-1}\left(\frac{X_L}{R}\right)$	Phase angle of an *RL* lead circuit
8	$V_{out} = \left(\frac{X_L}{\sqrt{R^2 + X_L^2}}\right)V_{in}$	Output voltage of an *RL* lead circuit
9	$Z = \frac{RX_L}{\sqrt{R^2 + X_L^2}}$	Parallel *RL* impedance
10	$\theta = \tan^{-1}\left(\frac{R}{X_L}\right)$	Parallel *RL* phase angle
11	$G = \frac{1}{R}$	Conductance
12	$B_L = \frac{1}{X_L}$	Inductive susceptance
13	$Y = \frac{1}{Z}$	Admittance
14	$Y_{tot} = \sqrt{G^2 + B_L^2}$	Total admittance
15	$I_{tot} = \sqrt{I_R^2 + I_L^2}$	Total current in parallel *RL* circuit
16	$\theta = \tan^{-1}\left(\frac{I_L}{I_R}\right)$	Parallel *RL* phase angle
17	$P_r = I^2X_L$	Reactive power
18	$f_c = \frac{R}{2\pi L}$	Cutoff frequency of *RL* circuit

TRUE/FALSE QUIZ

Answers are at the end of the chapter.

1. In an ac circuit where $R = X_L$, the phase angle is 45°.
2. In an ac series *RL* circuit where 3.0 V is dropped across the resistor and 4.0 V is dropped across the inductor, it follows that the source voltage is 5.0 V.
3. In an ac series *RL* circuit, the current and voltage are in phase for the inductor.
4. In an ac parallel *RL* circuit, the inductive susceptance is always less than the admittance.

www.EngineeringBooksPdf.com

5. In an ac parallel *RL* circuit, the voltage across the inductor is out of phase with the voltage across the resistor.
6. The unit *siemens* is used to measure both susceptance and admittance.
7. The reciprocal of impedance is susceptance.
8. If the power factor of a circuit is 0.5, the reactive power and true power are equal.
9. A purely resistive circuit has a power factor of 0.
10. A high-pass series *RL* filter has the output taken from across the resistor.

SELF-TEST

Answers are at the end of the chapter.

1. In a series *RL* circuit, the resistor voltage
   (a) leads the source voltage **(b)** lags the source voltage
   (c) is in phase with the source voltage **(d)** is in phase with the current
   (e) answers (a) and (d) **(f)** answers (b) and (d)
2. When the frequency of the voltage applied to a series *RL* circuit is increased, the impedance
   (a) decreases **(b)** increases **(c)** does not change
3. When the frequency of the voltage applied to a series *RL* circuit is decreased, the phase angle
   (a) decreases **(b)** increases **(c)** does not change
4. If the frequency is doubled and the resistance is halved, the impedance of a series *RL* circuit
   (a) doubles **(b)** halves
   (c) remains constant **(d)** cannot be determined without values
5. To reduce the current in a series *RL* circuit, the frequency should be
   (a) increased **(b)** decreased **(c)** constant
6. In a series *RL* circuit, 10 V rms is measured across the resistor, and 10 V rms is measured across the inductor. The peak value of the source voltage is
   (a) 14.14 V **(b)** 28.28 V **(c)** 10 V **(d)** 20 V
7. The voltages in Question 6 are measured at a certain frequency. To make the resistor voltage greater than the inductor voltage, the frequency is
   (a) increased **(b)** decreased **(c)** doubled **(d)** not a factor
8. When the resistor voltage in a series *RL* circuit becomes greater than the inductor voltage, the phase angle
   (a) increases **(b)** decreases **(c)** is not affected
9. When the frequency is increased, the impedance of a parallel *RL* circuit
   (a) increases **(b)** decreases **(c)** remains constant
10. In a parallel *RL* circuit, there are 2 A rms in the resistive branch and 2 A rms in the inductive branch. The total rms current is
    (a) 4 A **(b)** 5.656 A **(c)** 2 A **(d)** 2.828 A
11. You are observing two voltage waveforms on an oscilloscope. The time base (sec/div) of the scope is set to 10 μs. One half-cycle of the waveforms covers the ten horizontal divisions. The positive-going zero crossing of one waveform is at the leftmost division, and the positive-going zero crossing of the other is three divisions to the right. The phase angle between these two waveforms is
    (a) 18° **(b)** 36° **(c)** 54° **(d)** 180°
12. Which of the following power factors results in the least energy conversion to heat in an *RL* circuit?
    (a) 1 **(b)** 0.9 **(c)** 0.5 **(d)** 0.1
13. If a load is purely inductive and the reactive power is 10 VAR, the apparent power is
    (a) 0 VA **(b)** 10 VA **(c)** 14.14 VA **(d)** 3.16 VA

www.EngineeringBooksPdf.com

14. For a certain load, the true power is 10 W and the reactive power is 10 VAR. The apparent power is

(a) 5 VA **(b)** 20 VA **(c)** 14.14 VA **(d)** 100 VA

15. The cutoff frequency of a certain low-pass *RL* circuit is 20 kHz. The bandwidth is

(a) 20 kHz **(b)** 40 kHz **(c)** 0 kHz **(d)** unknown

TROUBLESHOOTING: SYMPTOM AND CAUSE

The purpose of these exercises is to help develop thought processes essential to troubleshooting. Answers are at the end of the chapter.

Determine the cause for each set of symptoms. Refer to Figure 49.

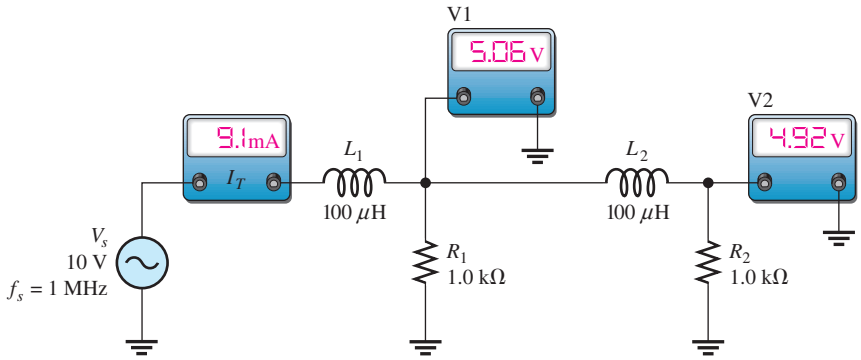

▲ **FIGURE 49**

The ac meters indicate the correct readings for this circuit.

1. *Symptom:* The ammeter reading is 15.9 mA, and the voltmeter 1 and voltmeter 2 readings are zero.

Cause:

(a) L_1 is open.

(b) L_2 is open.

(c) R_1 is shorted.

2. *Symptom:* The ammeter reading is 8.47 mA, the voltmeter 1 reading is 8.47 V, and the voltmeter 2 reading is 0 V.

Cause:

(a) L_2 is open.

(b) R_2 is open.

(c) R_2 is shorted.

3. *Symptom:* The ammeter reading is slightly less than 20 mA, and both voltmeter readings are slightly less than 10 V.

Cause:

(a) L_1 is shorted.

(b) R_1 is open.

(c) The source frequency is incorrectly set very low.

4. *Symptom:* The ammeter reading is 4.55 mA, voltmeter 1 reads 2.53 V, and voltmeter 2 reads 2.15 V.

Cause:

(a) The source frequency is incorrectly set at 500 kHz.

(b) The source voltage is incorrectly set at 5 V.

(c) The source frequency is incorrectly set at 2 MHz.

www.EngineeringBooksPdf.com

5. *Symptom:* All meter readings are zero.
   Cause:
   (a) The voltage source is faulty or off.
   (b) L_1 is open.
   (c) Either (a) or (b)

PROBLEMS

Answers to odd-numbered problems are at the end of the chapter.

BASIC PROBLEMS

SECTION 1 Sinusoidal Response of *RL* Circuits

1. A 15 kHz sinusoidal voltage is applied to a series *RL* circuit. Determine the frequency of I, V_R, and V_L.
2. What are the waveshapes of I, V_R, and V_L in Problem 1?

SECTION 2 Impedance and Phase Angle of Series *RL* Circuits

3. Find the impedance of each circuit in Figure 50.

▶ FIGURE 50

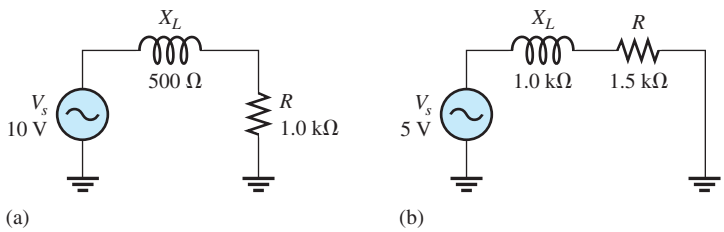

4. Determine the impedance and phase angle in each circuit in Figure 51.

▶ FIGURE 51

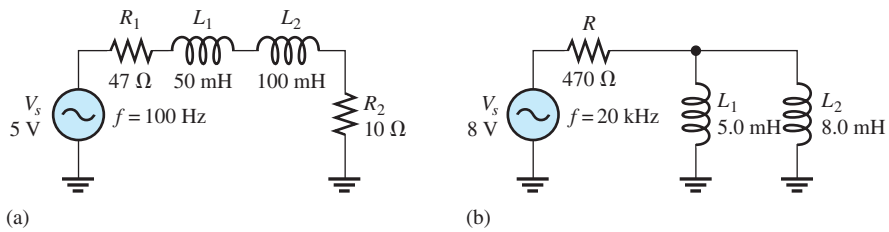

5. In Figure 52, determine the impedance at each of the following frequencies:
   (a) 100 Hz **(b)** 500 Hz **(c)** 1 kHz **(d)** 2 kHz

▶ FIGURE 52

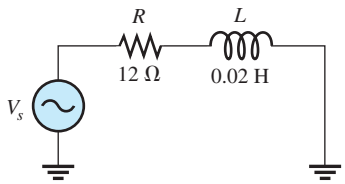

6. Determine the values of R and X_L in a series *RL* circuit for the following values of impedance and phase angle:
   (a) $Z = 20\ \Omega, \theta = 45°$ **(b)** $Z = 500\ \Omega, \theta = 35°$
   (c) $Z = 2.5\ \text{k}\Omega, \theta = 72.5°$ **(d)** $Z = 998\ \Omega, \theta = 45°$

SECTION 3 Analysis of Series *RL* Circuits

7. If the frequency of the source is increased to 1 kHz in the circuit in Figure 51(a), calculate the voltage across the total resistance.

www.EngineeringBooksPdf.com

8. Determine the voltage across the total resistance and across the total inductance in Figure 51(b).
9. Find the current for each circuit of Figure 50.
10. Calculate the total current in each circuit of Figure 51.
11. Determine θ for the circuit in Figure 53.
12. If the inductance in Figure 53 is doubled, does θ increase or decrease, and by how many degrees?
13. Draw the waveforms for V_s, V_R, and V_L in Figure 53. Show the proper phase relationships.
14. For the circuit in Figure 54, find V_R and V_L for each of the following frequencies:
    (a) 60 Hz **(b)** 200 Hz **(c)** 500 Hz **(d)** 1 kHz

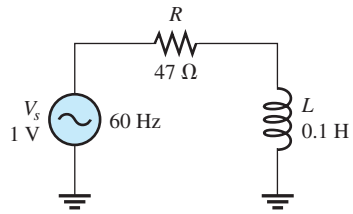

▲ FIGURE 53

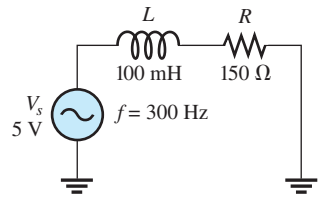

▲ FIGURE 54

15. For the lag circuit in Figure 55, determine the phase lag of the output voltage with respect to the input for the following frequencies:
    (a) 1 Hz **(b)** 100 Hz **(c)** 1 kHz **(d)** 10 kHz
16. Repeat Problem 15 for the lead circuit in Figure 56.

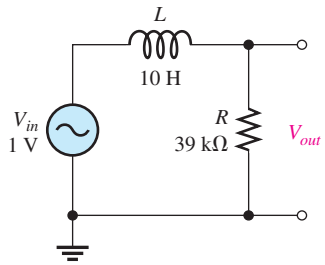

▲ FIGURE 55

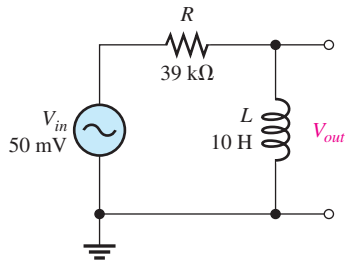

▲ FIGURE 56

SECTION 4 Impedance and Phase Angle of Parallel *RL* Circuits

17. What is the impedance for the circuit in Figure 57?
18. Repeat Problem 17 for the following frequencies:
    (a) 1.5 kHz **(b)** 3 kHz **(c)** 5 kHz **(d)** 10 kHz
19. At what frequency does X_L equal R in Figure 57?

SECTION 5 Analysis of Parallel *RL* Circuits

20. Find the total current and each branch current in Figure 58.

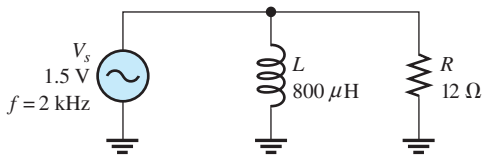

▲ FIGURE 57

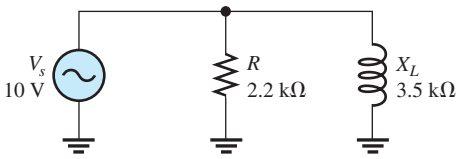

▲ FIGURE 58

www.EngineeringBooksPdf.com

21. Determine the following quantities in Figure 59:

(a) Z **(b)** I_R **(c)** I_L **(d)** I_{tot} **(e)** θ

22. Convert the circuit in Figure 60 to an equivalent series form.

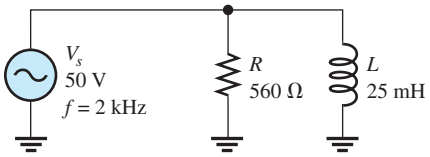

▲ FIGURE 59

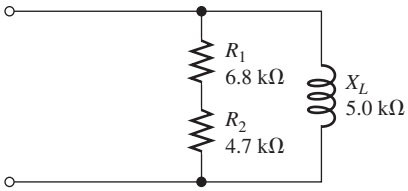

▲ FIGURE 60

SECTION 6 Analysis of Series-Parallel *RL* Circuits

23. Determine the voltage across each element in Figure 61.

24. Is the circuit in Figure 61 predominantly resistive or predominantly inductive?

25. Find the current in each branch and the total current in Figure 61.

▶ FIGURE 61

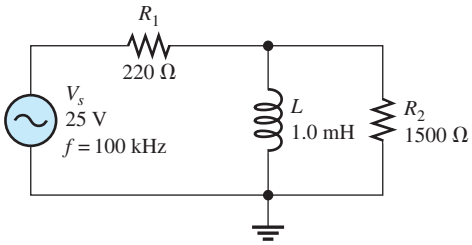

SECTION 7 Power in *RL* Circuits

26. In a certain *RL* circuit, the true power is 100 mW, and the reactive power is 340 mVAR. What is the apparent power?

27. Determine the true power and the reactive power in Figure 53.

28. What is the power factor in Figure 58?

29. Determine P_{true}, P_r, P_a, and PF for the circuit in Figure 61. Draw the power triangle.

SECTION 8 Basic Applications

30. Plot the response curve for the circuit in Figure 55. Show the output voltage versus frequency in 1 kHz increments from 0 Hz to 5 kHz.

31. Using the same procedure as in Problem 30, plot the response curve for Figure 56.

32. Draw the voltage phasor diagram for each circuit in Figures 55 and 56 for a frequency of 8 kHz.

SECTION 9 Troubleshooting

33. Determine the voltage across each component in Figure 62 if L_1 were open.

34. Determine the output voltage in Figure 63 for each of the following failure modes:

(a) L_1 open **(b)** L_2 open **(c)** R_1 open **(d)** a short across R_2

▶ FIGURE 62

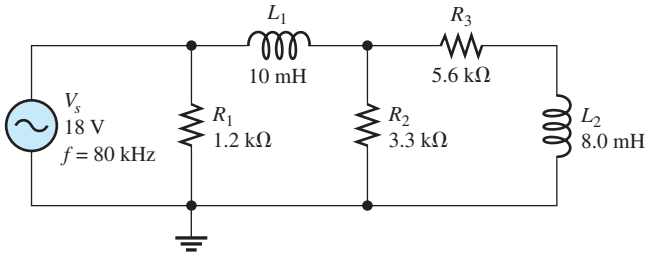

www.EngineeringBooksPdf.com

▶ FIGURE 63

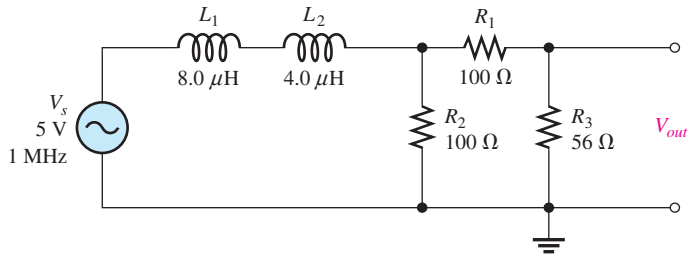

ADVANCED PROBLEMS

35. Determine the voltage across the inductors in Figure 64.

▶ FIGURE 64

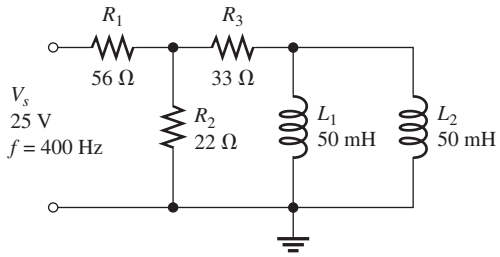

36. Is the circuit in Figure 64 predominantly resistive or predominantly inductive?

37. Find the total current in Figure 64.

38. For the circuit in Figure 65, determine the following:

(a) Z_{tot} **(b)** I_{tot} **(c)** θ **(d)** V_L **(e)** V_{R3}

39. For the circuit in Figure 66, determine the following:

(a) I_{R1} **(b)** I_{L1} **(c)** I_{L2} **(d)** I_{R2}

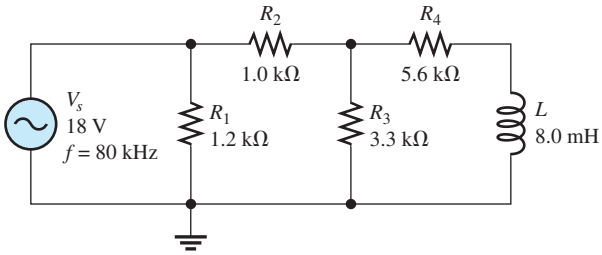

▲ FIGURE 65

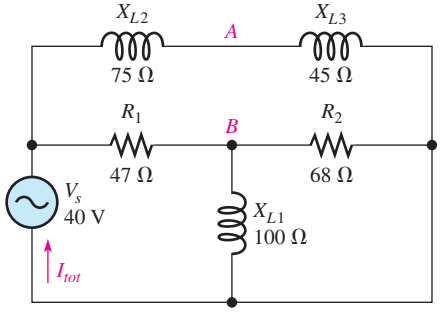

▲ FIGURE 66

40. Determine the phase shift and attenuation (ratio of V_{out} to V_{in}) from the input to the output for the circuit in Figure 67.

41. Determine the attenuation from the input to the output for the circuit in Figure 68.

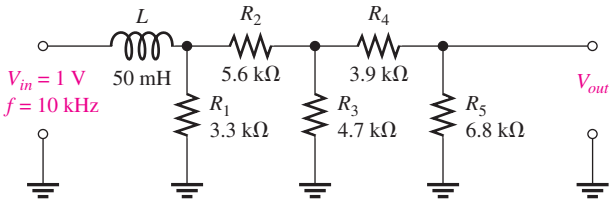

▲ FIGURE 67

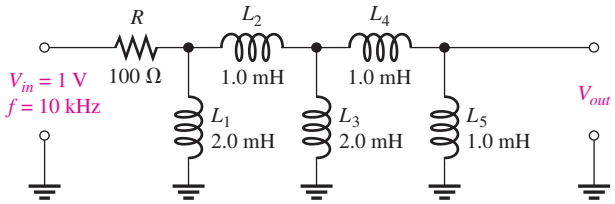

▲ FIGURE 68

www.EngineeringBooksPdf.com

42. Design an ideal inductive switching circuit that will provide a momentary voltage of 2.5 kV from a 12 V dc source when a switch is thrown instantaneously from one position to another. The drain on the source must not exceed 1 A.

43. Draw the schematic for the circuit in Figure 69 and determine if the waveforms on the scope are correct. If there is a fault in the circuit, identify it.

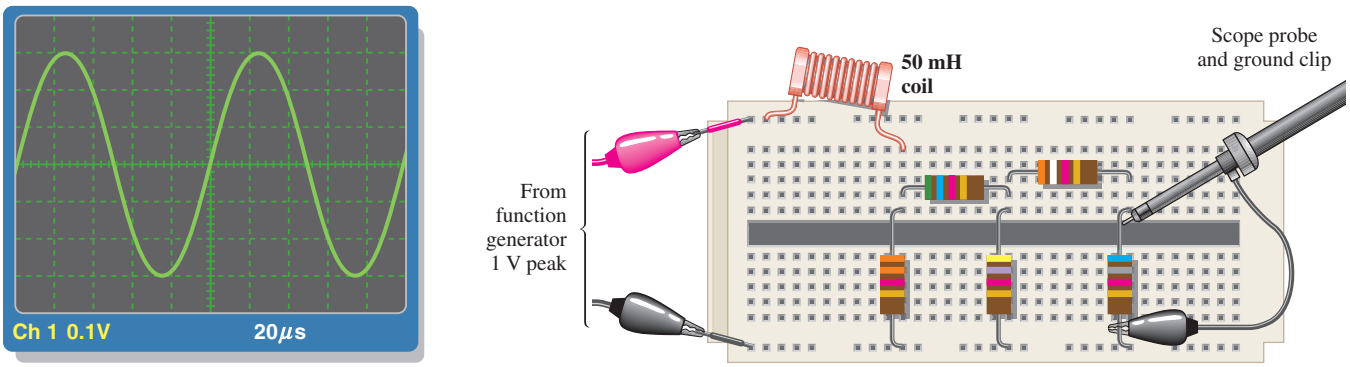

(a) Oscilloscope display

(b) Circuit with leads connected

▲ FIGURE 69

MULTISIM TROUBLESHOOTING PROBLEMS

44. Open file P12-44; files are found at www.pearsonhighered.com/floyd/. Determine if there is a fault and, if so, identify it.

45. Open file P12-45. Determine if there is a fault and, if so, identify it.

46. Open file P12-46. Determine if there is a fault and, if so, identify it.

47. Open file P12-47. Determine if there is a fault and, if so, identify it.

48. Open file P12-48. Determine if there is a fault and, if so, identify it.

49. Open file P12-49. Determine if there is a fault and, if so, identify it.

ANSWERS

SECTION CHECKUPS

SECTION 1 Sinusoidal Response of *RL* Circuits

1. The current frequency is at 1 kHz.
2. θ is closer to 0° when $R > X_L$.

SECTION 2 Impedance and Phase Angle of Series *RL* Circuits

1. V_s leads I.
2. $X_L = R$
3. In an *RL* circuit, current lags voltage; in an *RC* circuit, current leads voltage.
4. $Z = \sqrt{R^2 + X_L^2} = 59.9\ \text{k}\Omega$; $\theta = \tan^{-1}(X_L/R) = 56.6°$

SECTION 3 Analysis of Series *RL* Circuits

1. $V_s = \sqrt{V_R^2 + V_L^2} = 3.61\ \text{V}$
2. $\theta = \tan^{-1}(X_L/V_R) = 56.3°$
3. When f increases, X_L increases, Z increases, and θ increases.

www.EngineeringBooksPdf.com

4. $\phi = 90° - \tan^{-1}(X_L/R) = 81.9°$
5. $V_{out} = \left(\dfrac{R}{\sqrt{R^2 + X_L^2}}\right)V_{in} = 9.90\text{ V}$

SECTION 4 Impedance and Phase Angle of Parallel *RL* Circuits

1. $Z = 1/Y = 20\,\Omega$
2. $Y = \sqrt{G^2 + B_L^2} = 2.5\text{ mS}$
3. I_{tot} lags V_s by 32.1°.

SECTION 5 Analysis of Parallel *RL* Circuits

1. $I_{tot} = V_sY = 32\text{ mA}$
2. $\theta = \tan^{-1}(I_L/I_R) = 59.0°$; $I_{tot} = \sqrt{I_R^2 + I_L^2} = 23.3\text{ mA}$
3. $\theta = 90°$

SECTION 6 Analysis of Series-Parallel *RL* Circuits

1. $I_{tot} = \sqrt{(I_1\cos\theta_1 + I_2\cos\theta_2)^2 + (I_1\sin\theta_1 + I_2\sin\theta_2)^2} = 20.2\text{ mA}$
2. $Z = V_s/I_{tot} = 494\,\Omega$

SECTION 7 Power in *RL* Circuits

1. Power dissipation is in the resistor.
2. $PF = \cos 50° = 0.643$
3. $P_{\text{true}} = I^2R = 4.7\text{ W}$; $P_r = I^2X_L = 6.2\text{ VAR}$; $P_a = \sqrt{P_{\text{true}}^2 + P_r^2} = 7.78\text{ VA}$

SECTION 8 Basic Applications

1. Output is across the resistor.
2. The switching regulator is more efficient than other types.
3. The pulse width increases.

SECTION 9 Troubleshooting

1. Shorted windings reduce L and thereby reduce X_L at any given frequency.
2. I_{tot} decreases, V_{R1} decreases, and V_{R2} increases when L opens.

RELATED PROBLEMS FOR EXAMPLES

1 2.04 kΩ; 27.8°
2 423 μA
3 No
4 12.6 kΩ; 85.5°
5 32°
6 12.3 V rms
7 65.6°
8 8.14 kΩ; 35.5°
9 3.70 mS
10 14.0 mA; 71.1°
11 14.9 mA
12 **(a)** 8.04 V
(b) 2.00 V

www.EngineeringBooksPdf.com

13 Current decreases.

14 P_{true}, P_r, and P_a decrease.

15 Open connection between L_1 and L_2

TRUE/FALSE QUIZ

1. T **2.** T **3.** F **4.** T **5.** F **6.** T **7.** F **8.** T **9.** F **10.** F

SELF-TEST

1. (f) **2.** (b) **3.** (a) **4.** (d) **5.** (a) **6.** (d) **7.** (b)
8. (b) **9.** (a) **10.** (d) **11.** (c) **12.** (d) **13.** (b) **14.** (c)
15. (a)

TROUBLESHOOTING: SYMPTOM AND CAUSE

1. (c) **2.** (a) **3.** (c) **4.** (b) **5.** (c)

PROBLEMS – ODD-NUMBERED ANSWERS

1. 15 kHz

3. **(a)** 1.12 kΩ **(b)** 1.8 kΩ

5. **(a)** 17.4 Ω **(b)** 64 Ω **(c)** 127 Ω **(d)** 251 Ω

7. 0.302 V

9. **(a)** 8.94 mA **(b)** 2.77 mA0

11. 38.7°

13. See Figure P–14.

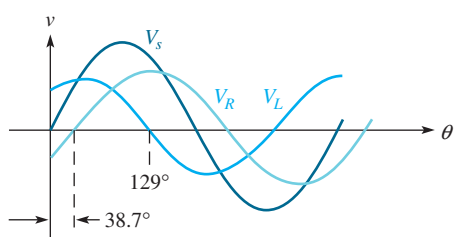

▲ FIGURE P–14

15. **(a)** 0.092° **(b)** 9.15° **(c)** 58.2° **(d)** 86.4°

17. 7.69 Ω

19. 2.39 kHz

21. **(a)** 274 Ω **(b)** 89.3 mA **(c)** 159 mA
(d) 183 mA **(e)** 60.7° (I_{tot} lagging V_s)

23. $V_{R1} = 7.92$ V; $V_{R2} = V_L = 20.8$ V

25. $I_{tot} = 36$ mA; $I_L = 33.2$ mA; $I_{R2} = 13.9$ mA

27. 13.0 mW; 10.4 mVAR

29. $PF = 0.386$; $P_{true} = 347$ mW; $P_r = 692$ mVAR;
$P_a = 900$ mVA

31. See Figure P–15.

33. $V_{R1} = V_{L1} = 18$ V; $V_{R2} = V_{R3} = V_{L2} = 0$ V

35. 5.57 V

www.EngineeringBooksPdf.com

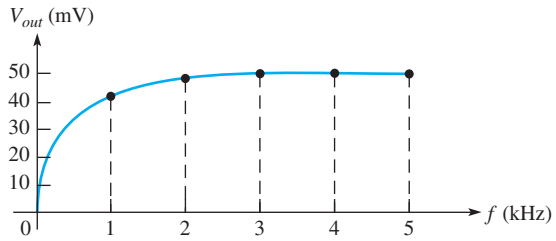

▲ FIGURE P–15

37. 343 mA

39. **(a)** 405 mA **(b)** 228 mA **(c)** 333 mA **(d)** 335 mA

41. 0.133

43. See Figure P–16.

45. L_2 is open.

47. R_2 is open.

49. L_1 is shorted.

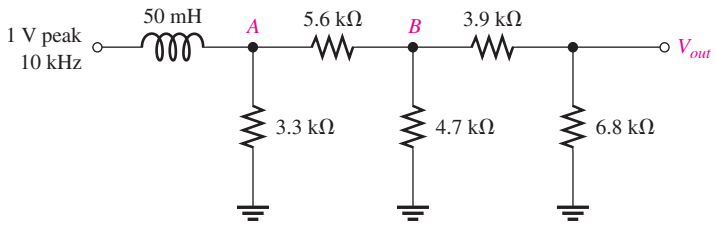

▲ FIGURE P–16

PHOTO CREDITS FOR REOCCURRING IMAGES

CD Icon: Stockbyte/Getty Images; **Computer Chips:** Photodisc/Thinkstock; **Computer:** Jeff Maloney/Photodisc/Getty Images; **Fiber Optic:** discpicture/Shutterstock.

www.EngineeringBooksPdf.com

This page intentionally left blank

www.EngineeringBooksPdf.com

RLC Circuits and Resonance

CHAPTER OUTLINE

1 Impedance and Phase Angle of Series *RLC* Circuits
2 Analysis of Series *RLC* Circuits
3 Series Resonance
4 Series Resonant Filters
5 Parallel *RLC* Circuits
6 Parallel Resonance
7 Parallel Resonant Filters
8 Applications
Application Assignment: Putting Your Knowledge to Work

CHAPTER OBJECTIVES

- Determine the impedance and phase angle of a series *RLC* circuit
- Analyze series *RLC* circuits
- Analyze a circuit for series resonance
- Analyze series resonant filters
- Analyze parallel *RLC* circuits
- Analyze a circuit for parallel resonance
- Analyze the operation of parallel resonant filters
- Discuss some applications of resonant circuits

KEY TERMS

- Series resonance
- Resonant frequency
- Band-pass filter
- Cutoff frequency
- Half-power frequency
- Decibel (dB)
- Selectivity
- Band-stop filter
- Parallel resonance

APPLICATION ASSIGNMENT PREVIEW

The application assignment in this chapter requires that you plot a frequency response curve for a resonant filter with unknown characteristics. From the frequency response measurements, you will identify the type of filter and determine the resonant frequency and the bandwidth. After studying this chapter, you should be able to complete the application assignment.

VISIT THE COMPANION WEBSITE

Study aids for this chapter are available at http://www.pearsonhighered.com/floyd/

INTRODUCTION

In this chapter, you will learn about frequency response of circuits with combinations of resistance, capacitance, and inductance (*RLC*). Both series and parallel *RLC* circuits, including the concepts of series and parallel resonance will be discussed.

Because it is the basis for frequency selectivity, resonance in electrical circuits is important to the operation of many types of electronic systems, particularly in the area of communications. For example, the ability of a radio or television receiver to select a certain frequency transmitted by a particular station and to eliminate frequencies from other stations is based on the principle of resonance.

The operation of both band-pass and band-stop filters is based on resonance of circuits containing inductance and capacitance, and these filters are discussed in this chapter. Also, certain system applications are presented.

Streeter Photography/Alamy

From Chapter 13 of *Electronics Fundamentals: Circuits, Devices, and Applications*, Eighth Edition, Thomas L. Floyd, David M. Buchla. Copyright © 2010 by Pearson Education, Inc. Published by Pearson Prentice Hall. All rights reserved.

www.EngineeringBooksPdf.com

1 IMPEDANCE AND PHASE ANGLE OF SERIES *RLC* CIRCUITS

A series *RLC* circuit contains resistance, inductance, and capacitance. Since inductive reactance and capacitive reactance have opposite effects on the circuit phase angle, the total reactance is less than either individual reactance.

After completing this section, you should be able to

- **Determine the impedance and phase angle of a series *RLC* circuit**
  - Calculate total reactance
  - Determine whether a circuit is predominately inductive or capacitive

A series *RLC* circuit is shown in Figure 1. It contains resistance, inductance, and capacitance.

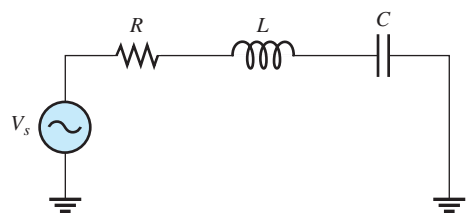

▲ FIGURE 1

Series *RLC* circuit.

As you know, inductive reactance (X_L) causes the total current to lag the source voltage. Capacitive reactance (X_C) has the opposite effect: It causes the current to lead the voltage. Thus, X_L and X_C tend to offset each other. When they are equal, they cancel, and the total reactance is zero. In any case, the total reactance in a series circuit is

Equation 1

$$X_{tot} = |X_L - X_C|$$

The term $|X_L - X_C|$ means the absolute value of the difference of the two reactances. That is, the sign of the result is considered positive no matter which reactance is greater. For example, $3 - 7 = -4$, but the absolute value is

$$|3 - 7| = 4$$

When $X_L > X_C$, the circuit is predominantly inductive; and when $X_C > X_L$, the circuit is predominantly capacitive.

The total impedance for a series *RLC* circuit is given by

Equation 2

$$Z_{tot} = \sqrt{R^2 + X_{tot}^2}$$

and the value of the phase angle between V_s and I is

Equation 3

$$\theta = \tan^{-1}\left(\frac{X_{tot}}{R}\right)$$

The phase angle is positive (current leading voltage) when the circuit is inductive and negative (current lagging voltage) when the circuit is capacitive.

This icon indicates selected websites for further information on topics in this section. See the Companion Website provided with this text.

www.EngineeringBooksPdf.com

EXAMPLE 1

Determine the total impedance and the phase angle for the series *RLC* circuit in Figure 2.

▶ **FIGURE 2**

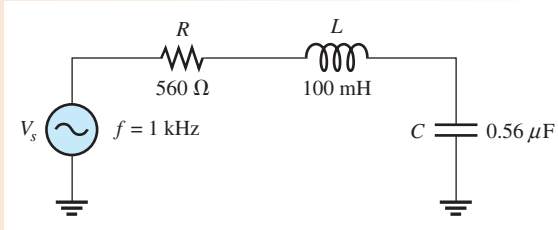

Solution First, find X_C and X_L.

$$X_C = \frac{1}{2\pi fC} = \frac{1}{2\pi(1\text{ kHz})(0.56\ \mu\text{F})} = 284\ \Omega$$

$$X_L = 2\pi fL = 2\pi(1\text{ kHz})(100\text{ mH}) = 628\ \Omega$$

In this case, X_L is greater than X_C, so the circuit is more inductive than capacitive. The magnitude of the total reactance is

$$X_{tot} = |X_L - X_C| = |628\ \Omega - 284\ \Omega| = 344\ \Omega \qquad \text{(inductive)}$$

The total circuit impedance is

$$Z_{tot} = \sqrt{R^2 + X_{tot}^2} = \sqrt{(560\ \Omega)^2 + (344\ \Omega)^2} = \mathbf{657\ \Omega}$$

The phase angle (between I and V_s) is

$$\theta = \tan^{-1}\left(\frac{X_{tot}}{R}\right) = \tan^{-1}\left(\frac{344\ \Omega}{560\ \Omega}\right) = \mathbf{31.6°} \qquad \text{(current lagging } V_s\text{)}$$

*Related Problem** Increase the frequency in Figure 2 to 2000 Hz and determine Z and θ.

*Answers are at the end of the chapter.

As you have seen, when the inductive reactance is greater than the capacitive reactance, the circuit appears to be inductive, and the current lags the source voltage. When the capacitive reactance is greater, the circuit appears to be capacitive, and the current leads the source voltage.

SECTION 1 CHECKUP
Answers are at the end of the chapter.

1. Explain how you can determine if a series *RLC* circuit is inductive or capacitive.
2. In a given series *RLC* circuit, X_C is 150 Ω and X_L is 80 Ω. What is the total reactance in ohms? Is the circuit inductive or capacitive?
3. Determine the impedance for the circuit in Question 2 when $R = 45\ \Omega$. What is the phase angle? Is the current leading or lagging the source voltage?

2 ANALYSIS OF SERIES *RLC* CIRCUITS

Recall that capacitive reactance varies inversely with frequency and that inductive reactance varies directly with frequency. In this section, the combined effects of the reactances as a function of frequency are examined.

www.EngineeringBooksPdf.com

After completing this section, you should be able to

- **Analyze series *RLC* circuits**
  - Determine current in a series *RLC* circuit
  - Determine the voltages in a series *RLC* circuit
  - Determine the phase angle

Figure 3 shows that for a typical series *RLC* circuit the total reactance behaves as follows: Starting at a very low frequency, X_C is high, X_L is low, and the circuit is predominantly capacitive. As the frequency is increased, X_C decreases and X_L increases until a value is reached where $X_C = X_L$ and the two reactances cancel, making the circuit purely resistive. This condition is **series resonance** and will be studied in Section 3. As the frequency is increased further, X_L becomes greater than X_C, and the circuit is predominantly inductive. Example 2 illustrates how the impedance and phase angle change as the source frequency is varied.

▶ **FIGURE 3**

How X_C and X_L vary with frequency.

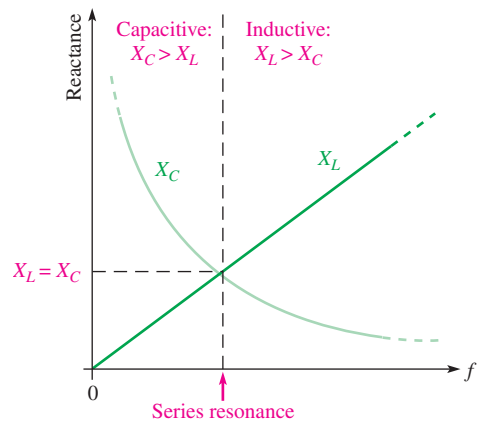

The graph of X_L is a straight line, and the graph of X_C is curved, as shown in Figure 3. The general equation for a straight line is $y = mx + b$, where m is the slope of the line and b is the y-axis intercept point. The formula $X_L = 2\pi fL$ fits this general straight-line formula, where $y = X_L$ (a variable), $m = 2\pi L$ (a constant), $x = f$ (a variable), and $b = 0$ as follows: $X_L = 2\pi Lf + 0$.

The X_C curve is called a *hyperbola,* and the general equation of a hyperbola is $xy = k$. The equation for capacitive reactance, $X_C = 1/2\pi fC$, can be rearranged as $X_C f = 1/2\pi C$ where $x = X_C$ (a variable), $y = f$ (a variable), and $k = 1/2\pi C$ (a constant).

EXAMPLE 2

For each of the following frequencies of the source voltage, find the impedance and the phase angle for the circuit in Figure 4. Note the change in the impedance and the phase angle with frequency.

(a) $f = 1$ kHz **(b)** $f = 3.5$ kHz **(c)** $f = 5$ kHz

▶ **FIGURE 4**

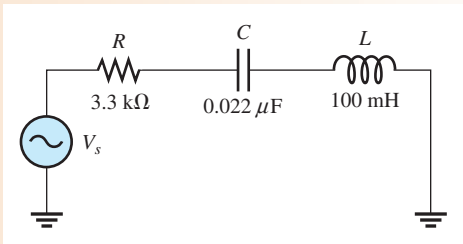

www.EngineeringBooksPdf.com

Solution **(a)** At $f = 1$ kHz,

$$X_C = \frac{1}{2\pi fC} = \frac{1}{2\pi(1\text{ kHz})(0.022\ \mu\text{F})} = 7.23\text{ k}\Omega$$

$$X_L = 2\pi fL = 2\pi(1\text{ kHz})(100\text{ mH}) = 628\ \Omega$$

The circuit is highly capacitive because X_C is much larger than X_L. The magnitude of the total reactance is

$$X_{tot} = |X_L - X_C| = |628\ \Omega - 7.23\text{ k}\Omega| = 6.6\text{ k}\Omega$$

The impedance is

$$Z = \sqrt{R^2 + X_{tot}^2} = \sqrt{(3.3\text{ k}\Omega)^2 + (6.6\text{ k}\Omega)^2} = \mathbf{7.38\ k\Omega}$$

The phase angle is

$$\theta = \tan^{-1}\left(\frac{X_{tot}}{R}\right) = \tan^{-1}\left(\frac{6.60\text{ k}\Omega}{3.3\text{ k}\Omega}\right) = \mathbf{63.4°}$$

I leads V_s by 63.4°.

(b) At $f = 3.5$ kHz,

$$X_C = \frac{1}{2\pi(3.5\text{ kHz})(0.022\ \mu\text{F})} = 2.07\text{ k}\Omega$$

$$X_L = 2\pi(3.5\text{ kHz})(100\text{ mH}) = 2.20\text{ k}\Omega$$

The circuit is very close to being purely resistive but is slightly inductive because X_L is slightly larger than X_C. The total reactance, impedance, and phase angle are

$$X_{tot} = |2.20\text{ k}\Omega - 2.07\text{ k}\Omega| = 130\ \Omega$$

$$Z = \sqrt{(3.3\text{ k}\Omega)^2 + (130\ \Omega)^2} = \mathbf{3.30\ k\Omega}$$

$$\theta = \tan^{-1}\left(\frac{130\ \Omega}{3.3\text{ k}\Omega}\right) = \mathbf{2.26°}$$

I lags V_s by 2.26°.

(c) At $f = 5$ kHz,

$$X_C = \frac{1}{2\pi(5\text{ kHz})(0.022\ \mu\text{F})} = 1.45\text{ k}\Omega$$

$$X_L = 2\pi(5\text{ kHz})(100\text{ mH}) = 3.14\text{ k}\Omega$$

The circuit is now predominantly inductive because $X_L > X_C$. The total reactance, impedance, and phase angle are

$$X_{tot} = |3.14\text{ k}\Omega - 1.45\text{ k}\Omega| = 1.69\text{ k}\Omega$$

$$Z = \sqrt{(3.3\text{ k}\Omega)^2 + (1.69\text{ k}\Omega)^2} = \mathbf{3.71\ k\Omega}$$

$$\theta = \tan^{-1}\left(\frac{1.69\text{ k}\Omega}{3.3\text{ k}\Omega}\right) = \mathbf{27.1°}$$

I lags V_s by 27.1°.

Notice how the circuit changed from capacitive to inductive as the frequency increased. The phase condition changed from the current leading to the current lagging. It is important to note that both the impedance and the phase angle decreased to a minimum and then began increasing again as the frequency went up.

Related Problem Determine Z for $f = 7$ kHz in Figure 4.

www.EngineeringBooksPdf.com

In a series *RLC* circuit, the capacitor voltage and the inductor voltage are always 180° out of phase with each other. For this reason, V_C and V_L subtract from each other, and thus the voltage across L and C combined is always less than the larger individual voltage across either component, as illustrated in Figure 5 and in the waveform diagram of Figure 16.

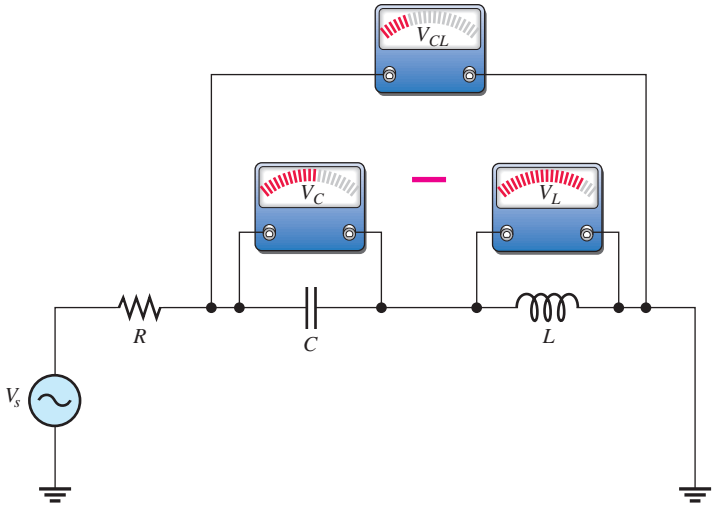

▲ **FIGURE 5**

The voltage across the series combination of C and L is always less than the larger individual voltage across either C or L.

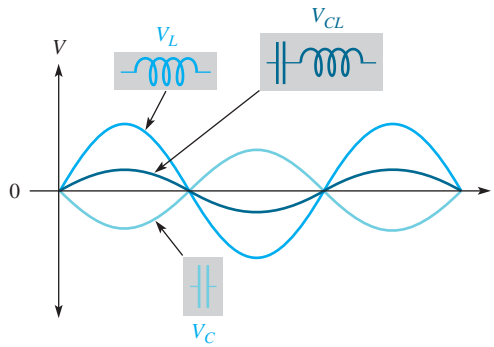

▲ **FIGURE 6**

Inductor voltage and capacitor voltage effectively subtract because they are out of phase.

In the next example, Ohm's law is used to find the current and voltages in a series *RLC* circuit.

EXAMPLE 3

Find the voltage across each component in Figure 7, and draw a complete voltage phasor diagram. Also find the voltage across L and C combined.

▶ **FIGURE 7**

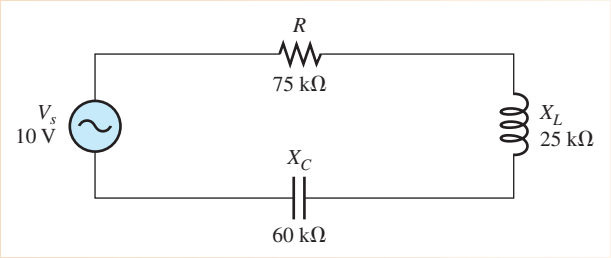

Solution First, find the total reactance.

$$X_{tot} = |X_L - X_C| = |25\text{ k}\Omega - 60\text{ k}\Omega| = 35\text{ k}\Omega$$

The total impedance is

$$Z_{tot} = \sqrt{R^2 + X_{tot}^2} = \sqrt{(75\text{ k}\Omega)^2 + (35\text{ k}\Omega)^2} = 82.8\text{ k}\Omega$$

www.EngineeringBooksPdf.com

Apply Ohm's law to find the current.

$$I = \frac{V_s}{Z_{tot}} = \frac{10\text{ V}}{82.8\text{ k}\Omega} = 121\ \mu\text{A}$$

Now, apply Ohm's law to find the voltages across R, L, and C.

$$V_R = IR = (121\ \mu\text{A})(75\text{ k}\Omega) = \mathbf{9.08\ V}$$
$$V_L = IX_L = (121\ \mu\text{A})(25\text{ k}\Omega) = \mathbf{3.03\ V}$$
$$V_C = IX_C = (121\ \mu\text{A})(60\text{ k}\Omega) = \mathbf{7.26\ V}$$

The voltage across L and C combined is

$$V_{CL} = V_C - V_L = 7.26\text{ V} - 3.03\text{ V} = \mathbf{4.23\ V}$$

The circuit phase angle is

$$\theta = \tan^{-1}\left(\frac{X_{tot}}{R}\right) = \tan^{-1}\left(\frac{35\text{ k}\Omega}{75\text{ k}\Omega}\right) = 25°$$

Since the circuit is capacitive ($X_C > X_L$), the current leads the source voltage by 25°.

The phasor diagram is shown in Figure 8. Notice that V_L is leading V_R by 90°, and V_C is lagging V_R by 90°. Also, there is a 180° phase difference between V_L and V_C. If the current phasor were shown, it would be at the same angle as V_R.

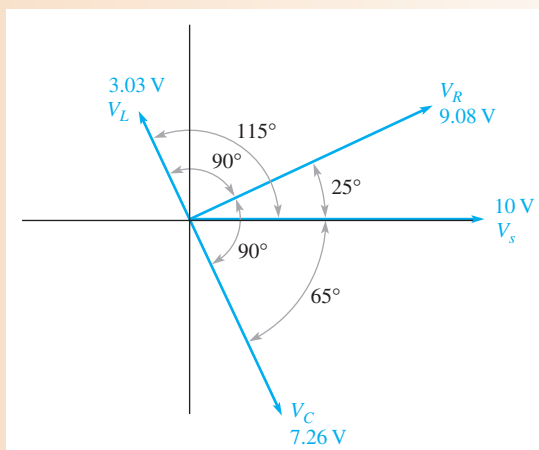

▲ FIGURE 8

Related Problem What will happen to the current as the frequency of the source voltage in Figure 7 is increased?

SECTION 2 CHECKUP

1. The following voltages occur in a certain series *RLC* circuit: $V_R = 24$ V, $V_L = 15$ V, $V_C = 45$ V. Determine the source voltage.
2. When $R = 10\text{ k}\Omega$, $X_C = 18\text{ k}\Omega$, and $X_L = 12\text{ k}\Omega$, does the current lead or lag the source voltage? Why?
3. Determine the total reactance in Question 2.

www.EngineeringBooksPdf.com

3 SERIES RESONANCE

In a series *RLC* circuit, series resonance occurs when $X_L = X_C$. The frequency at which resonance occurs is called the **resonant frequency** and is designated f_r.

After completing this section, you should be able to

- **Analyze a circuit for series resonance**
  - Define *resonant frequency*
  - Explain why the reactances cancel at resonance
  - Determine the series resonant frequency
  - Calculate the current and voltages at resonance
  - Determine the impedance at resonance

Figure 9 illustrates the series resonant condition. Since the reactances are equal and effectively cancel, the impedance is purely resistive. These resonant conditions are stated as

$$X_L = X_C$$
$$Z_r = R$$

▶ **FIGURE 9**

At the resonant frequency (f_r), the reactances are equal in magnitude and effectively cancel, leaving $Z_r = R$.

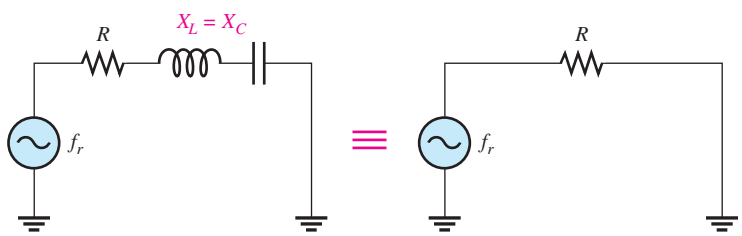

EXAMPLE 4

Assume the series *RLC* circuit in Figure 10 is at resonance. Determine X_C and Z.

▶ **FIGURE 10**

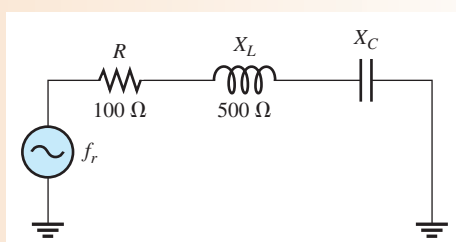

Solution X_L equals X_C at resonance; therefore,

$$X_C = X_L = \mathbf{500\ \Omega}$$

Since the reactances cancel each other, the impedance equals the resistance.

$$Z_r = R = \mathbf{100\ \Omega}$$

Related Problem Just below the resonant frequency, is the circuit more inductive or more capacitive?

At the series resonant frequency, the voltages across *C* and *L* are equal in magnitude because the reactances are equal. The same current is through both since they are in series ($IX_C = IX_L$). Also, V_L and V_C are always 180° out of phase with each other.

www.EngineeringBooksPdf.com

During any given cycle of the input voltage, the polarities of the voltages across C and L are opposite, as shown in parts (a) and (b) of Figure 11. The equal and opposite voltages across C and L cancel, leaving zero volts from point A to point B as shown in the figure. Since there is no voltage drop from A to B but there is still current, the total reactance must be zero, as indicated in Figure 11(c). Also, the voltage phasor diagram in part (d) shows that V_C and V_L are equal in magnitude and 180° out of phase with each other.

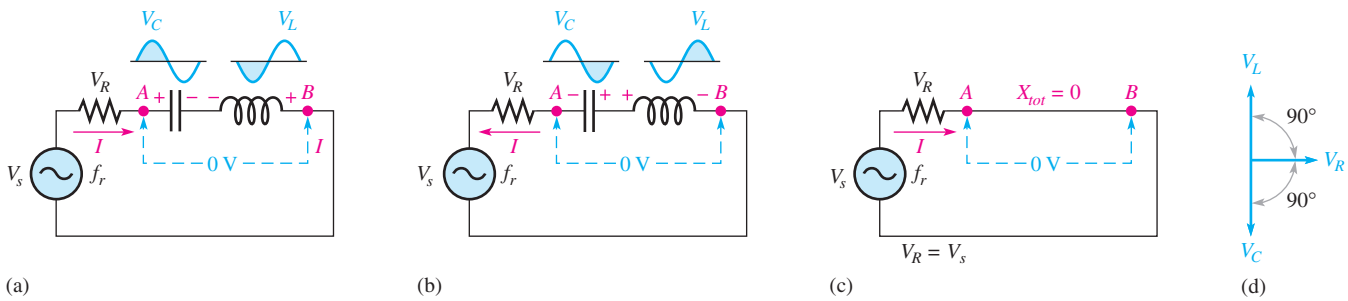

▲ **FIGURE 11**

At the resonant frequency, f_r, the voltages across C and L are equal in magnitude. Since they are 180° out of phase with each other, they cancel, leaving 0 V across the CL combination (point A to point B). The section of the circuit from A to B effectively looks like a short at resonance (neglecting winding resistance).

Series Resonant Frequency

For a given series RLC circuit, resonance occurs at only one specific frequency. A formula for this resonant frequency is developed as follows:

$$X_L = X_C$$

Substitute the reactance formulas, and solve for the resonant frequency (f_r).

$$2\pi f_r L = \frac{1}{2\pi f_r C}$$

$$(2\pi f_r L)(2\pi f_r C) = 4\pi^2 f_r^2 LC = 1$$

$$f_r^2 = \frac{1}{4\pi^2 LC}$$

Take the square root of both sides. The formula for resonant frequency is

$$\boldsymbol{f_r = \frac{1}{2\pi\sqrt{LC}}} \qquad \textbf{Equation 4}$$

EXAMPLE 5

Find the series resonant frequency for the circuit in Figure 12.

▶ **FIGURE 12**

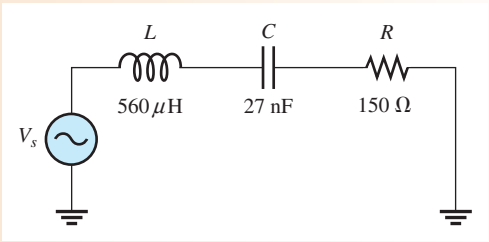

Solution The resonant frequency is

$$f_r = \frac{1}{2\pi\sqrt{LC}} = \frac{1}{2\pi\sqrt{(560\ \mu\text{H})(27\ \text{nF})}} = \mathbf{40.9\ kHz}$$

www.EngineeringBooksPdf.com

Related Problem If $C = 0.01\ \mu F$ in Figure 12, what is the resonant frequency?

Open Multisim file E13-05; files are found at www.pearsonhighered.com/floyd/. Determine the series resonant frequency by measurement.

Voltage and Current Amplitudes in a Series *RLC* Circuit

The current and voltage amplitudes in a series *RLC* circuit vary as the frequency is increased from below the resonant frequency, through resonance, and then above resonance. Figure 13 illustrates the general response of a circuit in terms of changes in the current and in the voltage drops. The Q (quality factor) of the circuit is assumed to be sufficiently

▶ **FIGURE 13**

An illustration of how the voltage and current amplitudes respond in a series *RLC* circuit as the frequency is increased from below to above its resonant value. The source voltage is held at a constant amplitude.

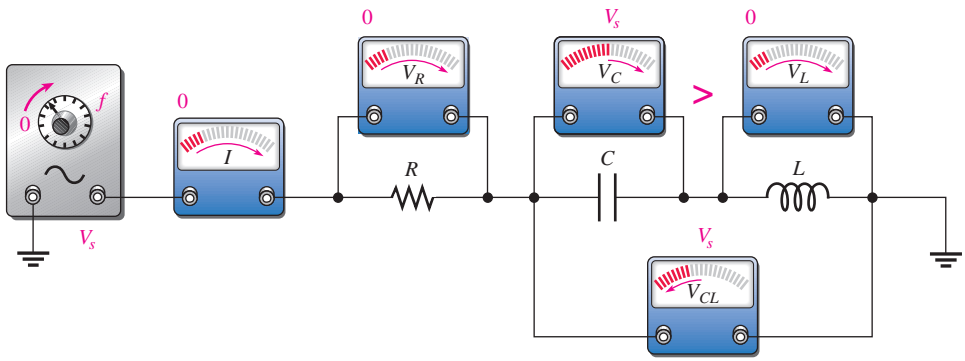

(a) As frequency is increased below resonance from 0: $X_C > X_L$, I increases from 0, V_R increases from 0, V_C increases from V_s, V_L increases from 0, and V_{CL} decreases from V_s.

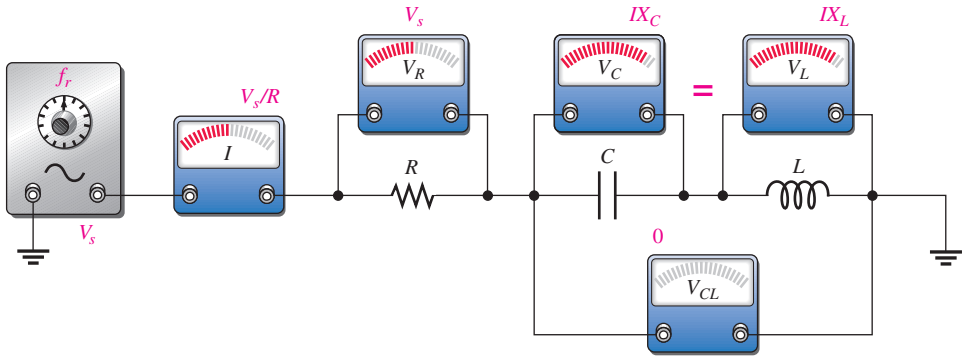

(b) At the resonant frequency, $X_C = X_L$.

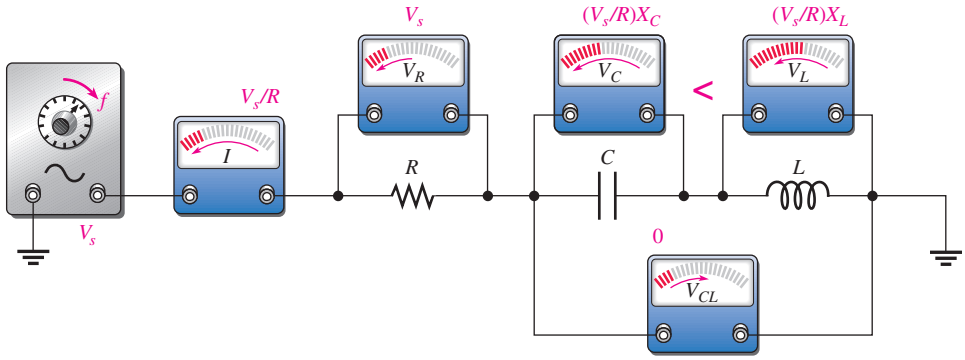

(c) As frequency is increased above resonance: $X_C < X_L$, I decreases from V_s/R, V_R decreases from V_s, V_C decreases from $(V_s/R)X_C$, V_L decreases from $(V_s/R)X_L$, and V_{CL} increases from 0.

www.EngineeringBooksPdf.com

high so it has no effect on the response. The Q is the ratio of reactive power to true power and is discussed later in this chapter.

Below the Resonant Frequency Figure 13(a) indicates the response as the source frequency is increased from zero toward f_r. At $f = 0$ Hz (dc), the capacitor appears open and blocks the current. Thus, there is no voltage across R or L, and the entire source voltage appears across C. The impedance of the circuit is infinitely large at 0 Hz because X_C is infinite (C is open). As the frequency begins to increase, X_C decreases and X_L increases, causing the total reactance, $X_C - X_L$, to decrease. As a result, the impedance decreases and the current increases. As the current increases, V_R also increases, and both V_C and V_L increase. The voltage across C and L combined decreases from its maximum value of V_s because as V_C and V_L approach the same value, their difference becomes less.

At the Resonant Frequency When the frequency reaches its resonant value, f_r, as shown in Figure 13(b), V_C and V_L can each be much larger than the source voltage. V_C and V_L cancel, leaving 0 V across the combination of C and L because the voltages are equal in magnitude but opposite in phase. At this point the total impedance is equal to R and is at its minimum value because the total reactance is zero. Thus, the current is at its maximum value, V_s/R, and V_R is at its maximum value, which is equal to the source voltage.

Above the Resonant Frequency As the frequency is increased above resonance, as indicated in Figure 13(c), X_L continues to increase and X_C continues to decrease, causing the total reactance, $X_L - X_C$, to increase. As a result, there is an increase in impedance and a decrease in current. As the current decreases, V_R also decreases and V_C and V_L decrease. As V_C and V_L decrease, their difference becomes greater, so V_{CL} increases. As the frequency becomes very high, the current approaches zero, both V_R and V_C approach zero, and V_L approaches V_s.

Figure 14(a) and (b) illustrate the responses of current and voltage to increasing frequency, respectively. As frequency is increased, the current increases below resonance, reaches a peak at the resonant frequency, and then decreases above resonance. The resistor voltage responds in the same way as the current.

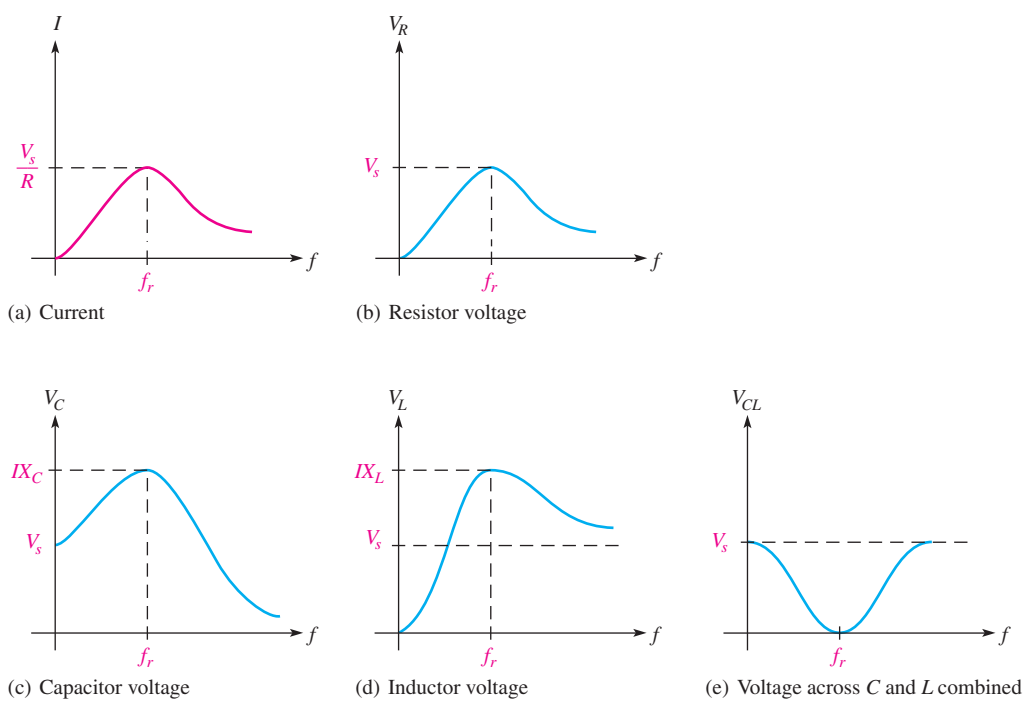

▲ **FIGURE 14**

Generalized current and voltage magnitudes as a function of frequency in a series *RLC* circuit. V_C and V_L can be much larger than the source voltage. The shapes of the graphs depend on particular circuit values.

www.EngineeringBooksPdf.com

The general slopes of the V_C and V_L curves are indicated in Figure 14(c) and (d). The voltages are maximum at resonance but drop off above and below f_r. The voltages across L and C at resonance are exactly equal in magnitude but 180° out of phase, so they cancel. Thus, the total voltage across both L and C is zero, and $V_R = V_s$ at resonance. Individually, V_L and V_C can be much greater than the source voltage. Keep in mind that V_L and V_C are always opposite in polarity regardless of the frequency, but only at resonance are their magnitudes equal. The voltage across the C and L combination decreases as the frequency increases below resonance, reaching a minimum of zero at the resonant frequency; then it increases above resonance, as shown in Figure 14(e).

The curves in Figure 14 are generalized curves, which depend on the particular components in the circuit. The shape will depend greatly on Q. You can plot these curves for any circuit by constructing the circuit in Multisim and using the Bode plotter. The **Bode plotter** in Multisim is a fictitious instrument that plots the frequency response based on where the probes are placed. The response of the resistor in Example 5 is shown in Figure 15.

▶ **FIGURE 15**

Multisim response of the resistor in Example 5.

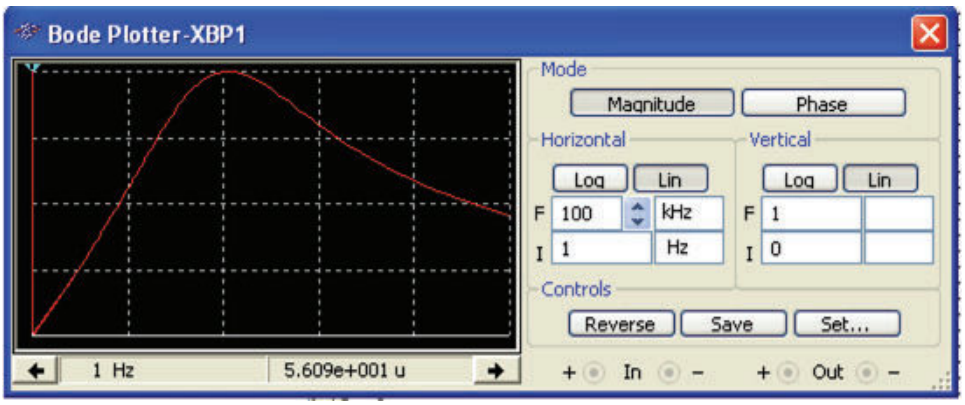

EXAMPLE 6

Find I, V_R, V_L, and V_C at resonance in Figure 16.

▶ **FIGURE 16**

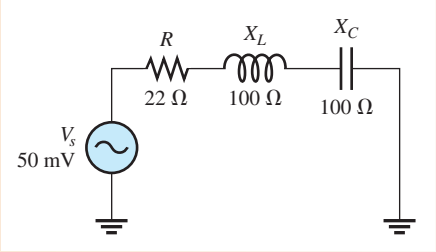

Solution At resonance, I is maximum and equal to V_s/R.

$$I = \frac{V_s}{R} = \frac{50\text{ mV}}{22\ \Omega} = \mathbf{2.27\ mA}$$

Apply Ohm's law to obtain the voltages.

$$V_R = IR = (2.27\text{ mA})(22\ \Omega) = \mathbf{50\ mV}$$
$$V_L = IX_L = (2.27\text{ mA})(100\ \Omega) = \mathbf{227\ mV}$$
$$V_C = IX_C = (2.27\text{ mA})(100\ \Omega) = \mathbf{227\ mV}$$

Notice that all of the source voltage is dropped across the resistor. Also, of course, V_L and V_C are equal in magnitude but opposite in phase. This causes the voltages to cancel, making the total reactive voltage zero.

Related Problem What is the current at resonance in Figure 16 if $X_L = X_C = 1\text{ k}\Omega$?

www.EngineeringBooksPdf.com

The Impedance of a Series *RLC* Circuit

Figure 17 shows a general graph of impedance versus frequency superimposed on the curves for X_C and X_L. At zero frequency, both X_C and Z are infinitely large and X_L is zero because the capacitor looks like an open at 0 Hz and the inductor looks like a short. As the frequency increases, X_C decreases and X_L increases. Since X_C is larger than X_L at frequencies below f_r, Z decreases along with X_C. At f_r, $X_C = X_L$ and $Z = R$. At frequencies above f_r, X_L becomes increasingly larger than X_C, causing Z to increase.

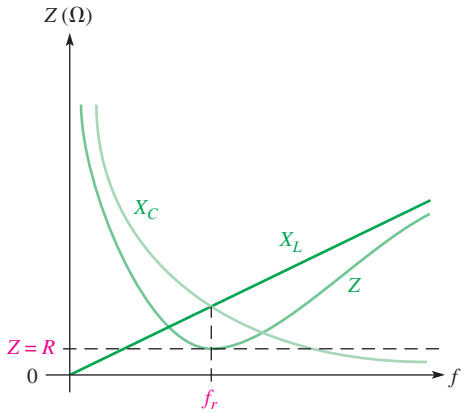

◀ **FIGURE 17**

Series *RLC* impedance as a function of frequency.

EXAMPLE 7

For the circuit in Figure 18, determine the impedance at the following frequencies:

(a) f_r **(b)** 1 kHz below f_r **(c)** 1 kHz above f_r

▶ **FIGURE 18**

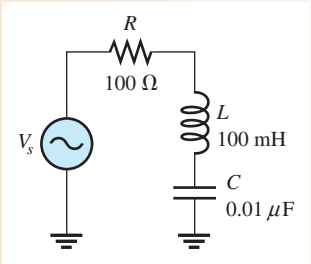

Solution **(a)** At f_r, the impedance is equal to R.

$$Z = R = \mathbf{100\ \Omega}$$

To determine the impedance above and below f_r, first calculate the resonant frequency.

$$f_r = \frac{1}{2\pi\sqrt{LC}} = \frac{1}{2\pi\sqrt{(100\text{ mH})(0.01\ \mu\text{F})}} = 5.03\text{ kHz}$$

(b) At 1 kHz below f_r, the frequency and reactances are as follows:

$$f = f_r - 1\text{ kHz} = 5.03\text{ kHz} - 1\text{ kHz} = 4.03\text{ kHz}$$

$$X_C = \frac{1}{2\pi fC} = \frac{1}{2\pi(4.03\text{ kHz})(0.01\ \mu\text{F})} = 3.95\text{ k}\Omega$$

$$X_L = 2\pi fL = 2\pi(4.03\text{ kHz})(100\text{ mH}) = 2.53\text{ k}\Omega$$

www.EngineeringBooksPdf.com

Therefore, the total reactance and the impedance at $f_r - 1$ kHz are

$$X_{tot} = |X_L - X_C| = |2.53\,\text{k}\Omega - 3.95\,\text{k}\Omega| = 1.42\,\text{k}\Omega$$
$$Z = \sqrt{R^2 + X_{tot}^2} = \sqrt{(100\,\Omega)^2 + (1.42\,\text{k}\Omega)^2} = \mathbf{1.42\,k\Omega}$$

(c) At 1 kHz above f_r,

$$f = 5.03\,\text{kHz} + 1\,\text{kHz} = 6.03\,\text{kHz}$$
$$X_C = \frac{1}{2\pi(6.03\,\text{kHz})(0.01\,\mu\text{F})} = 2.64\,\text{k}\Omega$$
$$X_L = 2\pi(6.03\,\text{kHz})(100\,\text{mH}) = 3.79\,\text{k}\Omega$$

Therefore, the total reactance and the impedance at $f_r + 1$ kHz are

$$X_{tot} = |3.79\,\text{k}\Omega - 2.64\,\text{k}\Omega| = 1.15\,\text{k}\Omega$$
$$Z = \sqrt{(100\,\Omega)^2 + (1.15\,\text{k}\Omega)^2} = \mathbf{1.15\,k\Omega}$$

In part (b), Z is capacitive; in part (c), Z is inductive.

Related Problem What happens to the impedance if f is decreased below 4.03 kHz? Above 6.03 kHz?

Open Multisim file E13-07. Measure the current and the voltage across each element at the resonant frequency, 1 kHz below resonance, and 1 kHz above resonance.

The Phase Angle of a Series *RLC* Circuit

At frequencies below resonance, $X_C > X_L$, and the current leads the source voltage, as indicated in Figure 19(a). The phase angle decreases as the frequency approaches the resonant value and is 0° at resonance, as indicated in part (b). At frequencies above resonance, $X_L > X_C$, and the current lags the source voltage, as indicated in part (c). As the frequency goes higher, the phase angle approaches 90°. A plot of phase angle versus frequency is shown in Figure 19(d).

▶ **FIGURE 19**

The phase angle as a function of frequency in a series *RLC* circuit.

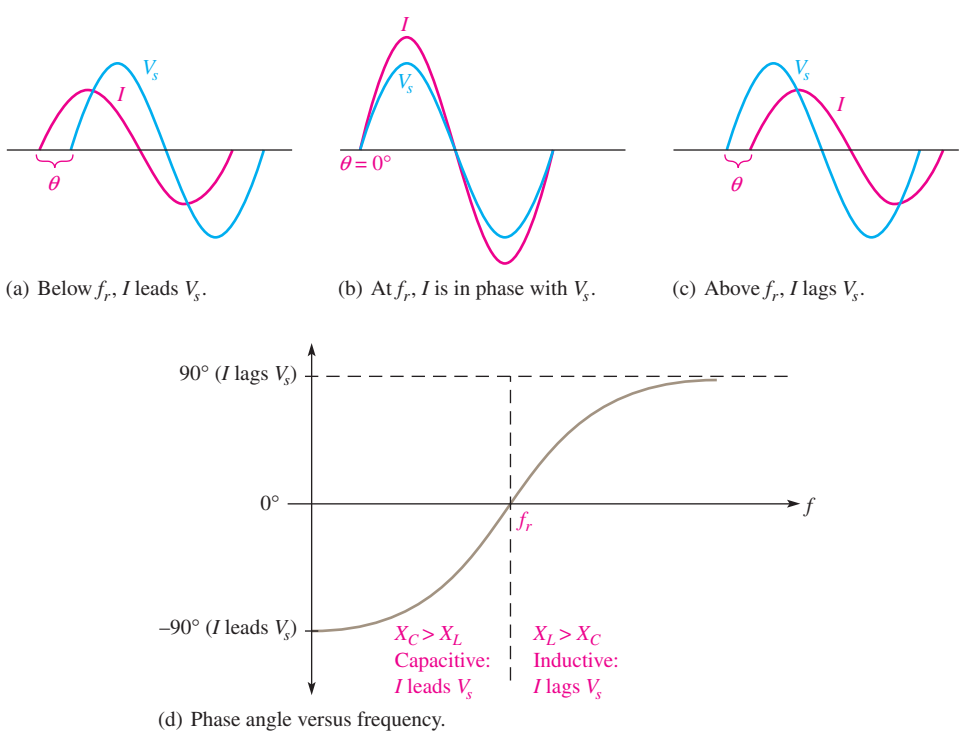

(a) Below f_r, I leads V_s. (b) At f_r, I is in phase with V_s. (c) Above f_r, I lags V_s.

(d) Phase angle versus frequency.

www.EngineeringBooksPdf.com

SECTION 3 CHECKUP

1. What is the condition for series resonance?
2. Why is the current maximum at the resonant frequency?
3. Calculate the resonant frequency for $C = 1000$ pF and $L = 1000\ \mu$H.
4. In Question 3, is the circuit inductive, capacitive, or resistive at 50 kHz?

4 SERIES RESONANT FILTERS

A common use of series *RLC* circuits is in filter applications. In this section, you will learn the basic configurations for passive band-pass and band-stop filters and several important filter characteristics.

After completing this section, you should be able to

- **Analyze series resonant filters**
  - Identify a basic series resonant band-pass filter
  - Define and determine *bandwidth*
  - Define the *half-power frequency*
  - Discuss dB measurement
  - Define *selectivity*
  - Discuss filter quality factor (Q)
  - Identify a series resonant band-stop filter

The Band-Pass Filter

A basic series resonant band-pass filter is shown in Figure 20. Notice that the series *LC* portion is placed between the input and the output and that the output is taken across the resistor.

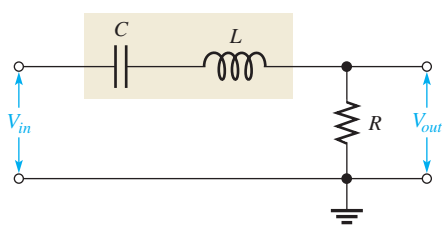

FIGURE 20

A basic series resonant band-pass filter.

A **band-pass filter** allows signals at the resonant frequency and at frequencies within a certain band (or range) extending below and above the resonant value to pass from input to output without a significant reduction in amplitude. Signals at frequencies lying outside this specified band (called the **passband**) are reduced in amplitude to below a certain level and are considered to be rejected by the filter.

The filtering action is the result of the impedance characteristic of the filter. As you learned in Section 3, the impedance is minimum at resonance and has increasingly higher values below and above the resonant frequency. At very low frequencies, the impedance is very high and tends to block the current. As the frequency increases, the impedance drops, allowing more current and thus more voltage across the output resistor. At the resonant frequency, the impedance is very low and equal to the total resistance of the circuit (winding resistance plus R). At this point there is maximum current and the resulting output voltage is maximum. As the frequency goes above resonance, the impedance

www.EngineeringBooksPdf.com

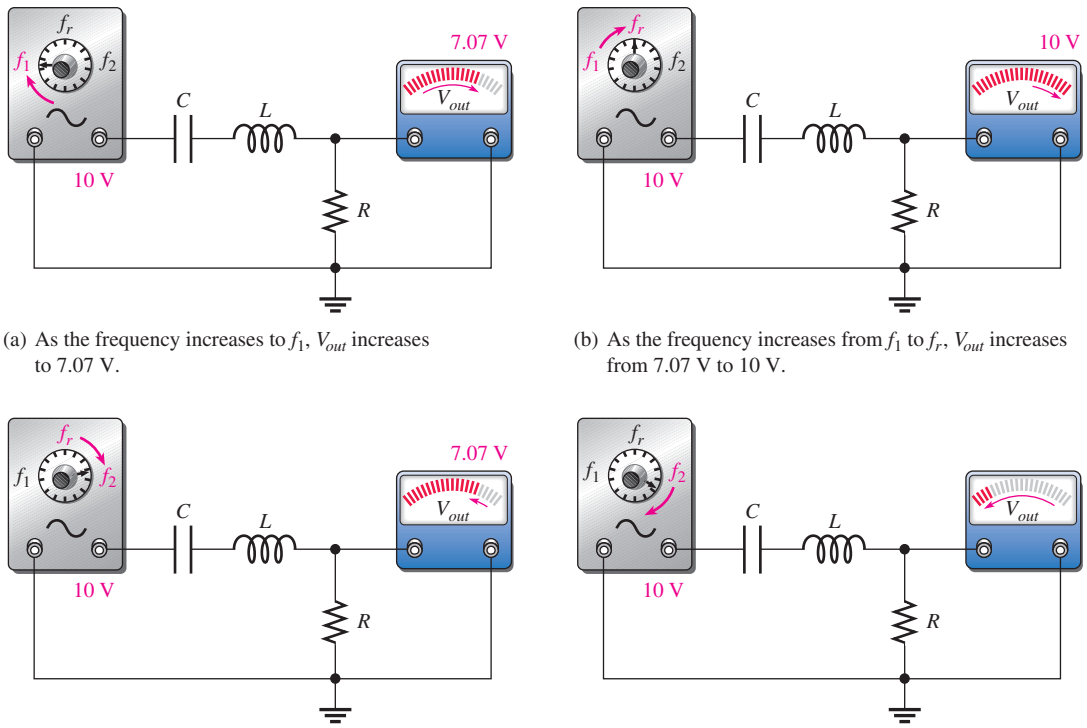

(a) As the frequency increases to f_1, V_{out} increases to 7.07 V.

(b) As the frequency increases from f_1 to f_r, V_{out} increases from 7.07 V to 10 V.

(c) As the frequency increases from f_r to f_2, V_{out} decreases from 10 V to 7.07 V.

(d) As the frequency increases above f_2, V_{out} decreases below 7.07 V.

▲ **FIGURE 21**

Example of the frequency response of a series resonant band-pass filter with the input voltage at a constant 10 V rms. The winding resistance of the coil is neglected.

again increases, causing the current and the resulting output voltage to drop. Figure 21 illustrates the general frequency response of a series resonant band-pass filter.

Bandwidth of the Passband

The bandwidth (*BW*) of a band-pass filter is the range of frequencies for which the current (or output voltage) is equal to or greater than 70.7% of its value at the resonant frequency. Figure 22 shows the bandwidth on the response curve for a band-pass filter.

The frequencies at which the output of a filter is 70.7% of its maximum are the **cutoff frequencies**. Notice in Figure 22 that frequency f_1, which is below f_r, is the frequency at which I (or V_{out}) is 70.7% of the resonant value (I_{max}); f_1 is commonly called the *lower*

▶ **FIGURE 22**

Generalized response curve of a series resonant band-pass filter.

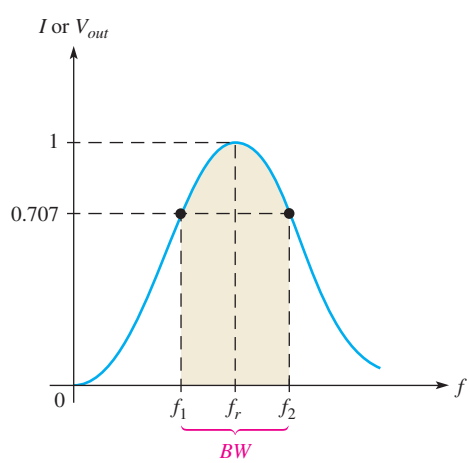

www.EngineeringBooksPdf.com

cutoff frequency. At frequency f_2, above f_r, the current (or V_{out}) is again 70.7% of its maximum; f_2 is called the *upper cutoff frequency.* Other names for f_1 and f_2 are *−3 dB frequencies, critical frequencies, band frequencies,* and *half-power frequencies.* (The term *decibel,* abbreviated dB, is defined later in this section.)

The formula for calculating the bandwidth is

$$BW = f_2 - f_1 \qquad \text{Equation 5}$$

The unit of bandwidth is the hertz (Hz), the same as for frequency.

EXAMPLE 8

A certain series resonant band-pass filter has a maximum current of 100 mA at the resonant frequency. What is the value of the current at the cutoff frequencies?

Solution Current at the cutoff frequencies is 70.7% of maximum.

$$I_{f1} = I_{f2} = 0.707I_{max} = 0.707(100\text{ mA}) = \mathbf{70.7\ mA}$$

Related Problem Will a change in the cutoff frequencies affect the current at the new cutoff frequencies if the maximum current remains 100 mA?

EXAMPLE 9

A resonant circuit has a lower cutoff frequency of 8 kHz and an upper cutoff frequency of 12 kHz. Determine the bandwidth.

Solution

$$BW = f_2 - f_1 = 12\text{ kHz} - 8\text{ kHz} = \mathbf{4\ kHz}$$

Related Problem What is the bandwidth when $f_1 = 1.0$ MHz and $f_2 = 1.2$ MHz?

Half-Power Points of the Filter Response

As previously mentioned, the upper and lower cutoff frequencies are sometimes called the **half-power frequencies**. This term is derived from the fact that the true power from the source at these frequencies is one-half the power delivered at the resonant frequency. The following steps show that this relationship is true for a series resonant circuit.

At resonance,

$$P_{max} = I_{max}^2 R$$

The power at f_1 (or f_2) is

$$P_{f1} = I_{f1}^2 R = (0.707I_{max})^2 R = (0.707)^2 I_{max}^2 R = 0.5I_{max}^2 R = 0.5P_{max}$$

Decibel (dB) Measurement

Another common term for the upper and lower cutoff frequencies is *−3 dB frequencies*. The **decibel (dB)** is ten times the logarithmic ratio of two powers, which can be used to express the input-to-output relationship of a filter. The following equation expresses a power ratio in decibels:

$$\text{dB} = 10\log\left(\frac{P_{out}}{P_{in}}\right) \qquad \text{Equation 6}$$

The decibel formula using a voltage ratio is based on the previous formula for the power ratio with voltages measured across equal resistances.

$$\text{dB} = 20\log\left(\frac{V_{out}}{V_{in}}\right) \qquad \text{Equation 7}$$

www.EngineeringBooksPdf.com

EXAMPLE 10

At a certain frequency, the output power of a filter is 5 W and the input power is 10 W. Express the power ratio in decibels.

Solution

$$10\log\left(\frac{P_{out}}{P_{in}}\right) = 10\log\left(\frac{5\text{ W}}{10\text{ W}}\right) = 10\log(0.5) = \mathbf{-3.01\text{ dB}}$$

Related Problem Express in decibels the ratio $V_{out}/V_{in} = 0.2$.

The −3 dB Frequencies The output of a filter is said to be down 3 dB at the cutoff frequencies. As you know, this frequency is the point at which the output voltage is 70.7% of the maximum voltage at resonance. We can show that the 70.7% point is the same as 3 dB below maximum (or −3 dB) as follows. The maximum voltage is the 0 dB reference.

$$20\log\left(\frac{0.707V_{max}}{V_{max}}\right) = 20\log(0.707) = -3\text{ dB}$$

Selectivity of a Band-Pass Filter

The response curve in Figure 22 is also called a *selectivity curve.* **Selectivity** defines how well a resonant circuit responds to a certain frequency and discriminates against all others. *The narrower the bandwidth, the greater the selectivity.*

In the ideal response, we assume that a resonant circuit accepts frequencies within its bandwidth and completely eliminates frequencies outside the bandwidth. Such is not actually the case, however, because signals with frequencies outside the bandwidth are not completely eliminated. Their magnitudes, however, are greatly reduced. The further the frequencies are from the cutoff frequencies, the greater the reduction, as illustrated in Figure 23(a). An ideal selectivity curve is shown in Figure 23(b).

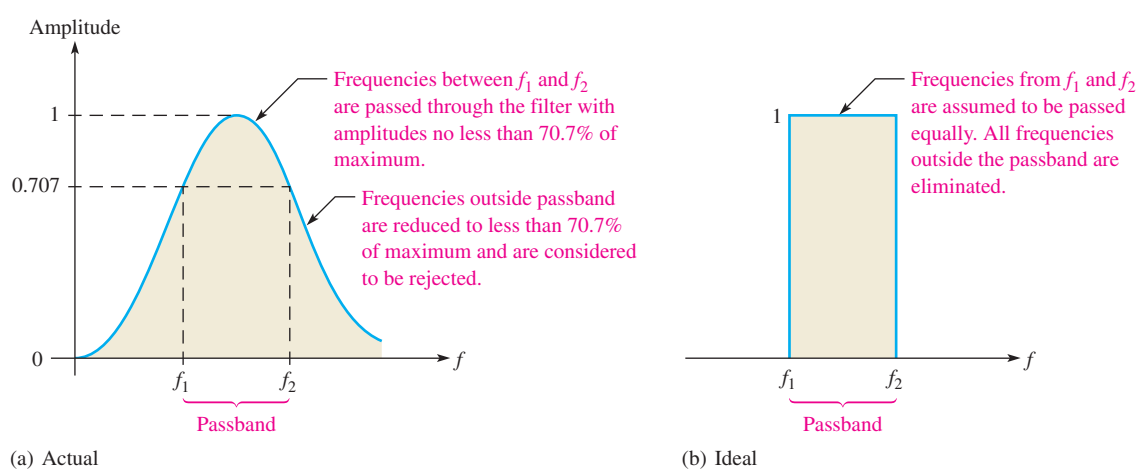

▲ **FIGURE 23**

Generalized selectivity curve of a band-pass filter.

The factor that determines the selectivity of a practical band-pass filter is the steepness of the response curve, as illustrated in Figure 24. A more selective filter attenuates (reduces) frequencies outside the passband more quickly than a less selective filter. In

www.EngineeringBooksPdf.com

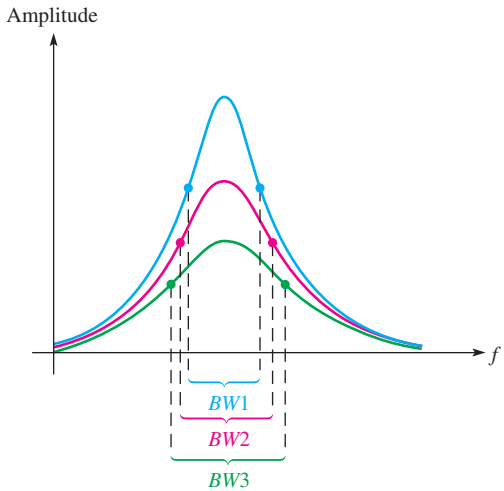

◀ FIGURE 24

Comparative selectivity curves. The blue curve represents the greatest selectivity.

communication systems, a highly selective filter will differentiate between a desired signal (such as from a radio station) and a nearby one.

The Quality Factor (Q) of a Resonant Circuit

The quality factor (Q) for a coil is the ratio of the reactive power (at a specified frequency) to the true power, which is dissipated in the winding resistance of the coil (L). In a series resonant circuit, the Q of the circuit includes any other resistance in series with the coil, so the circuit Q may be lower than the Q of the coil alone because R includes more than just the coil resistance. The Q of a series resonant circuit is the ratio of the reactive power in L to the true power in R. The quality factor is important in resonant circuits. A formula for Q is developed as follows:

$$Q = \frac{\text{reactive power}}{\text{true power}} = \frac{I^2X_L}{I^2R}$$

The I^2 terms cancel, leaving

$$\boldsymbol{Q = \frac{X_L}{R}}$$ **Equation 8**

Since Q varies with frequency because X_L varies, we are interested mainly in Q at resonance. Note that Q is a ratio of like units (ohms) which cancel and, therefore, Q has no unit itself. The quality factor is also known as unloaded Q because it is defined with no load across the coil.

EXAMPLE 11

Determine Q at resonance for the circuit in Figure 25.

▶ FIGURE 25

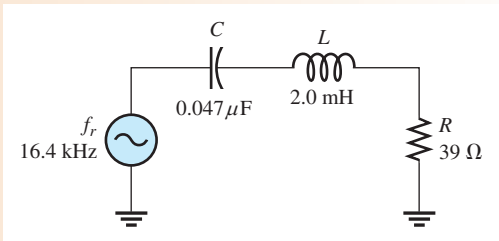

www.EngineeringBooksPdf.com

Solution Determine the inductive reactance.

$$X_L = 2\pi f_r L = 2\pi(16.4\text{ kHz})(2.0\text{ mH}) = 206\ \Omega$$

The quality factor is

$$Q = \frac{X_L}{R} = \frac{206\ \Omega}{39\ \Omega} = \mathbf{5.3}$$

Related Problem Calculate Q at resonance if C in Figure 25 is halved. The resonant frequency will increase.

How Q Affects Bandwidth A higher value of circuit Q results in a smaller bandwidth. A lower value of Q causes a larger bandwidth. A formula for the bandwidth of a resonant circuit in terms of Q is

Equation 9

$$BW = \frac{f_r}{Q}$$

EXAMPLE 12 What is the bandwidth of the filter in Figure 26?

▶ **FIGURE 26**

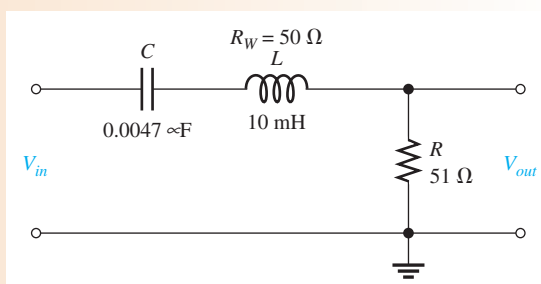

Solution The total resistance is

$$R_{tot} = R + R_W = 51\ \Omega + 50\ \Omega = 101\ \Omega$$

Determine the bandwidth as follows:

$$f_r = \frac{1}{2\pi\sqrt{LC}} = \frac{1}{2\pi\sqrt{(10\text{ mH})(0.0047\ \mu\text{F})}} = 23.2\text{ kHz}$$

$$X_L = 2\pi f_r L = 2\pi(23.2\text{ kHz})(10\text{ mH}) = 1.46\text{ k}\Omega$$

$$Q = \frac{X_L}{R_{tot}} = \frac{1.46\text{ k}\Omega}{101\ \Omega} = 14.5$$

$$BW = \frac{f_r}{Q} = \frac{23.2\text{ kHz}}{14.5} = \mathbf{1.60\ kHz}$$

Related Problem Determine the bandwidth if L is changed to 50 mH with the some winding resistance in Figure 26.

Open Multisim file E13-12. Determine the bandwidth by measurement. How closely does this result compare to the calculated value?

www.EngineeringBooksPdf.com

The Band-Stop Filter

The basic series resonant band-stop filter is shown in Figure 27. Notice that the output voltage is taken across the *LC* portion of the circuit. This filter is still a series *RLC* circuit, just as the band-pass filter is. The difference is that in this case, the output voltage is taken across the combination of *L* and *C* rather than across *R*.

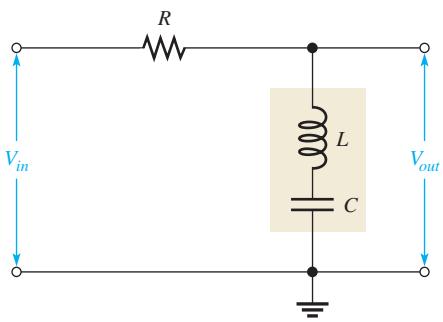

▲ FIGURE 27

A basic series resonant band-stop filter.

The **band-stop filter** rejects signals with frequencies between the lower and upper cutoff frequencies and passes those signals with frequencies below and above the cutoff values, as shown in the response curve of Figure 28. The range of frequencies between the lower and upper cutoff points is called the **stopband**. This type of filter is also referred to as a *band-elimination filter, band-reject filter,* or a *notch filter.*

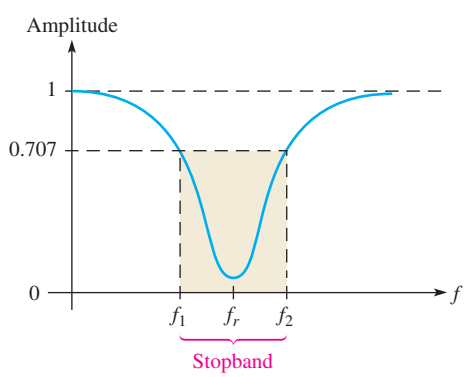

▲ FIGURE 28

Generalized response curve for a band-stop filter.

All the characteristics that have been discussed in relation to the band-pass filter apply equally to the band-stop filter, with the exception that the response curve of the output voltage is opposite. For the band-pass filter, V_{out} is maximum at resonance. For the band-stop filter, V_{out} is minimum at resonance.

At very low frequencies, the *LC* combination appears as a near open due to the high X_C, thus allowing most of the input voltage to pass through to the output. As the frequency increases, the impedance of the *LC* combination decreases until, at resonance, it is zero (ideally). Thus, the input signal is shorted to ground, and there is very little output voltage. As the frequency goes above its resonant value, the *LC* impedance increases, allowing an increasing amount of voltage to be dropped across it. The general frequency response of a series resonant band-stop filter is illustrated in Figure 29.

www.EngineeringBooksPdf.com

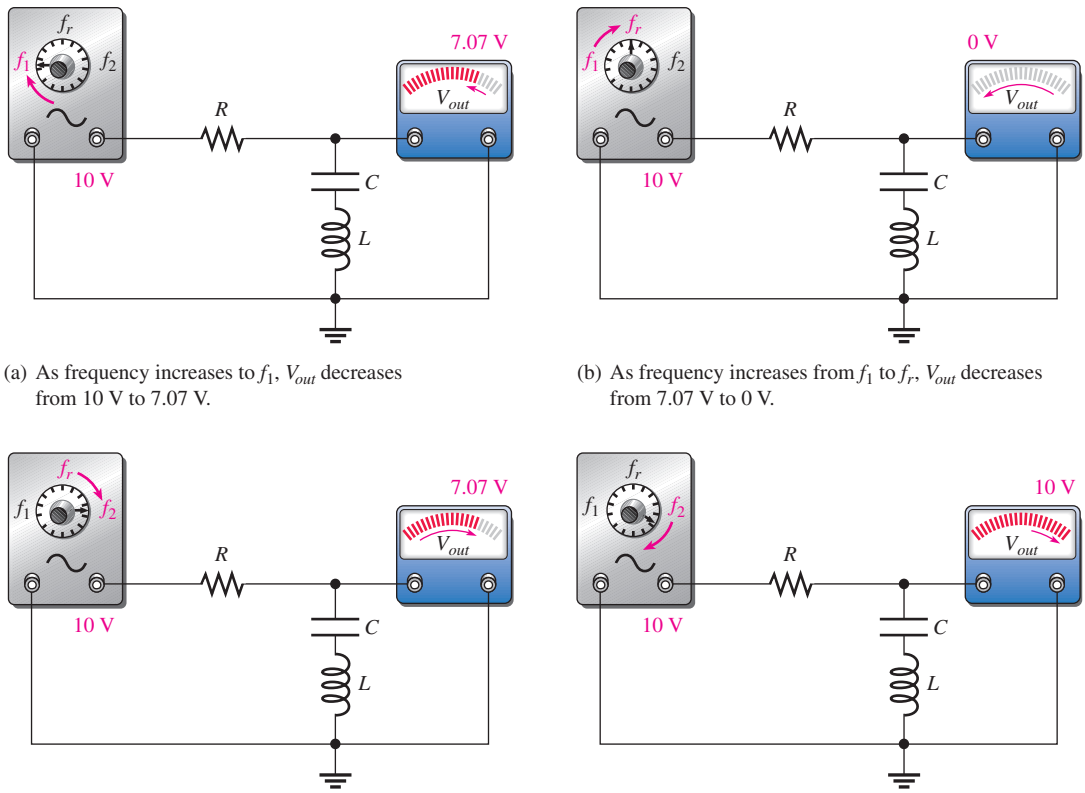

(a) As frequency increases to f_1, V_{out} decreases from 10 V to 7.07 V.

(b) As frequency increases from f_1 to f_r, V_{out} decreases from 7.07 V to 0 V.

(c) As frequency increases from f_r to f_2, V_{out} increases from 0 V to 7.07 V.

(d) As frequency increases above f_2, V_{out} increases toward 10 V.

▲ FIGURE 29

Example of the frequency response of a series resonant band-stop filter with V_{in} at a constant 10 V rms. The winding resistance is neglected.

EXAMPLE 13

Find the output voltage at f_r and the bandwidth in Figure 30.

▶ FIGURE 30

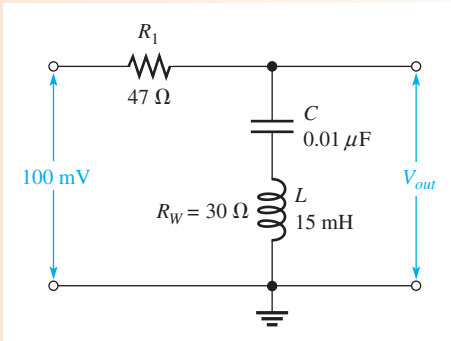

Solution Since $X_L = X_C$ at resonance, we can apply the voltage-divider formula to find V_{out}.

$$V_{out} = \left(\frac{R_W}{R_1 + R_W}\right)V_{in} = \left(\frac{30\ \Omega}{77\ \Omega}\right)100\ \text{mV} = \mathbf{39.0\ mV}$$

www.EngineeringBooksPdf.com

Determine the bandwidth as follows:

$$f_r = \frac{1}{2\pi\sqrt{LC}} = \frac{1}{2\pi\sqrt{(15\text{ mH})(0.01\ \mu\text{F})}} = 13.0\text{ kHz}$$

$$X_L = 2\pi f_r L = 2\pi(13.0\text{ kHz})(15\text{ mH}) = 1.22\text{ k}\Omega$$

$$Q = \frac{X_L}{R} = \frac{X_L}{R_1 + R_W} = \frac{1.22\text{ k}\Omega}{77\ \Omega} = 15.9$$

$$BW = \frac{f_r}{Q} = \frac{1.22\text{ kHz}}{15.9} = \mathbf{810\ Hz}$$

Related Problem What happens to V_{out} if the frequency is increased above resonance? Below resonance?

Open Multisim file E13-13. Verify the calculated value of the resonant frequency and then measure the output voltage at resonance. Determine the bandwidth by measurement.

SECTION 4 CHECKUP

1. The output voltage of a certain band-pass filter is 15 V at the resonant frequency. What is its value at the cutoff frequencies?
2. For a certain band-pass filter, $f_r = 120$ kHz and $Q = 12$. What is the bandwidth of the filter?
3. In a band-stop filter, is the current minimum or maximum at resonance? Is the output voltage minimum or maximum at resonance?

5 PARALLEL *RLC* CIRCUITS

In this section, you will learn how to determine the impedance and phase angle of a parallel *RLC* circuit. Current relationships and series-parallel to parallel conversions are discussed.

After completing this section, you should be able to

- **Analyze parallel *RLC* circuits**
  - Calculate the impedance
  - Calculate the phase angle
  - Determine all currents
  - Convert from a series-parallel *RLC* circuit to an equivalent parallel form

Impedance and Phase Angle

The circuit in Figure 31 consists of the parallel combination of R, L, and C. To find the admittance, add the conductance (G) and the total susceptance (B_{tot}) as phasor quantities. B_{tot} is the difference of the inductive susceptance and the capacitive susceptance.

$$B_{tot} = |B_L - B_C|$$

www.EngineeringBooksPdf.com

▶ FIGURE 31

Parallel *RLC* circuit.

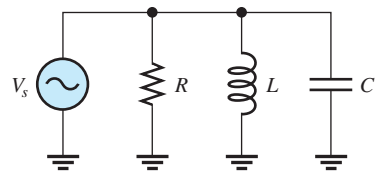

Therefore, the formula for admittance is

Equation 10

$$Y = \sqrt{G^2 + B_{tot}^2}$$

The total impedance is the reciprocal of the admittance.

$$Z_{tot} = \frac{1}{Y}$$

The phase angle of the circuit is given by the following formula:

Equation 11

$$\theta = \tan^{-1}\left(\frac{B_{tot}}{G}\right)$$

When the frequency is above its resonant value ($X_C < X_L$), the impedance of the circuit in Figure 31 is predominantly capacitive because the capacitive current is greater, and the total current leads the source voltage. When the frequency is below its resonant value ($X_L < X_C$), the impedance of the circuit is predominantly inductive, and the total current lags the source voltage.

EXAMPLE 14

Determine the total impedance and the phase angle for the parallel *RLC* circuit in Figure 32.

▶ FIGURE 32

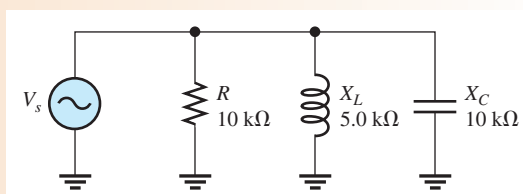

Solution First, determine the admittance as follows:

$$G = \frac{1}{R} = \frac{1}{10\,\text{k}\Omega} = 100\,\mu\text{S}$$

$$B_C = \frac{1}{X_C} = \frac{1}{10\,\text{k}\Omega} = 100\,\mu\text{S}$$

$$B_L = \frac{1}{X_L} = \frac{1}{5.0\,\text{k}\Omega} = 200\,\mu\text{S}$$

$$B_{tot} = |B_L - B_C| = 100\,\mu\text{S}$$

$$Y = \sqrt{G^2 + B_{tot}^2} = \sqrt{(100\,\mu\text{S})^2 + (100\,\mu\text{S})^2} = 141.4\,\mu\text{S}$$

From Y, you can get Z_{tot}.

$$Z_{tot} = \frac{1}{Y} = \frac{1}{141.4\,\mu\text{S}} = \mathbf{7.07\,k\Omega}$$

www.EngineeringBooksPdf.com

The phase angle is

$$\theta = \tan^{-1}\left(\frac{B_{tot}}{G}\right) = \tan^{-1}\left(\frac{100\ \mu S}{100\ \mu S}\right) = \mathbf{45°}$$

Related Problem Is the impedance of the circuit in Figure 32 predominantly inductive or predominantly capacitive?

Current Relationships

In a parallel *RLC* circuit, the current in the capacitive branch and the current in the inductive branch are always 180° out of phase with each other (neglecting any coil resistance). For this reason, I_C and I_L subtract from each other, and thus the total current into the parallel branches of L and C is always less than the largest individual branch current, as illustrated in Figure 33 and in the waveform diagram of Figure 34. Of course, the current in the resistive branch is always 90° out of phase with both reactive currents, as shown in the current phasor diagram of Figure 35. Notice that I_C is plotted on the positive y-axis and that I_L is plotted on the negative y-axis. The total current can be expressed as

$$I_{tot} = \sqrt{I_R^2 + I_{CL}^2} \qquad \text{Equation 12}$$

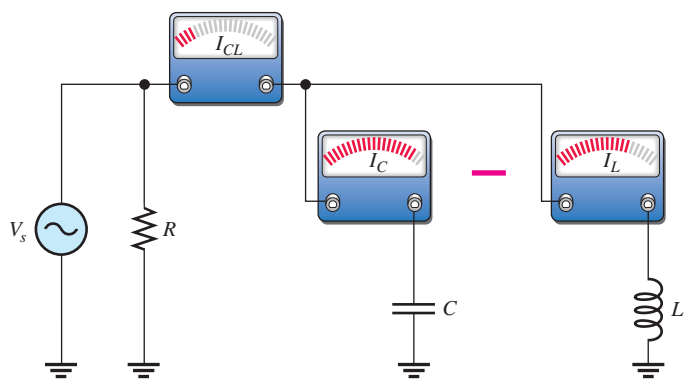

▲ FIGURE 33

The total current into the parallel combination of C and L is the difference of the two branch currents ($I_{CL} = |I_C - I_L|$).

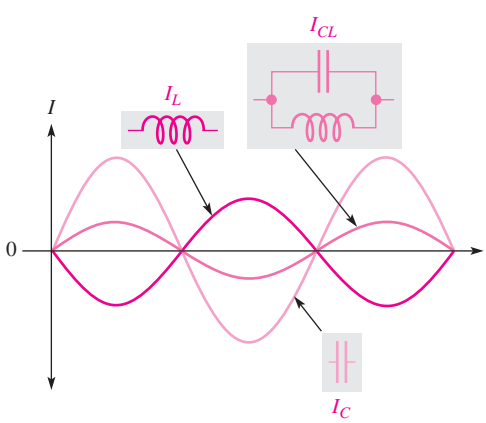

▲ FIGURE 34

I_C and I_L effectively subtract.

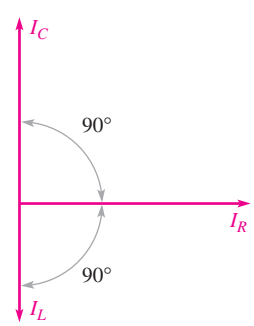

▲ FIGURE 35

Current phasor diagram for a parallel *RLC* circuit.

www.EngineeringBooksPdf.com

where I_{CL} is the absolute value of the difference of the two currents, $|I_C - I_L|$, and is the total current into the L and C branches.

The phase angle can also be expressed in terms of the branch currents as

Equation 13

$$\theta = \tan^{-1}\left(\frac{I_{CL}}{I_R}\right)$$

EXAMPLE 15

Find each branch current and the total current in Figure 36. Draw a diagram of their relationship.

▶ FIGURE 36

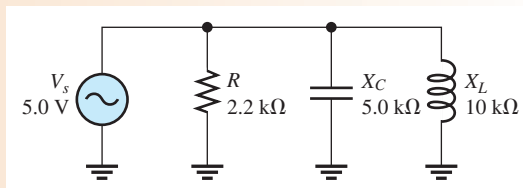

Solution Apply Ohm's law to find each branch current.

$$I_R = \frac{V_s}{R} = \frac{5.0\text{ V}}{2.2\text{ k}\Omega} = \mathbf{2.27\text{ mA}}$$

$$I_C = \frac{V_s}{X_C} = \frac{5.0\text{ V}}{5.0\text{ k}\Omega} = \mathbf{1.0\text{ mA}}$$

$$I_L = \frac{V_s}{X_L} = \frac{5.0\text{ V}}{10\text{ k}\Omega} = \mathbf{0.5\text{ mA}}$$

The total current is the phasor sum of the branch currents.

$$I_{CL} = |I_C - I_L| = 0.5\text{ mA}$$

$$I_{tot} = \sqrt{I_R^2 + I_{CL}^2} = \sqrt{(2.27\text{ mA})^2 + (0.5\text{ mA})^2} = \mathbf{2.32\text{ mA}}$$

The phase angle is

$$\theta = \tan^{-1}\left(\frac{I_{CL}}{I_R}\right) = \tan^{-1}\left(\frac{0.5\text{ mA}}{2.27\text{ mA}}\right) = 12.4°$$

The total current is 2.32 mA, leading V_s by 12.4°. Figure 37 is the current phasor diagram for the circuit.

▶ FIGURE 37

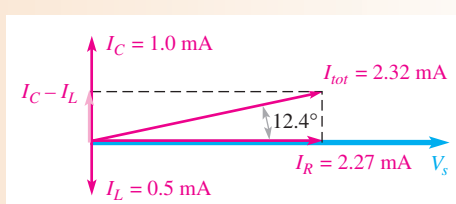

Related Problem Will the total current increase or decrease if the frequency in Figure 36 is increased? Why?

Conversion of Series-Parallel to Parallel

The particular series-parallel configuration shown in Figure 38 is important because it represents a circuit having parallel L and C branches, with the winding resistance of the coil taken into account as a series resistance in the L branch.

www.EngineeringBooksPdf.com

The series-parallel circuit in Figure 38 can be viewed in an equivalent purely parallel form, as indicated in Figure 39. This equivalent form will simplify the analysis of parallel resonant characteristics that will be discussed in Section 6.

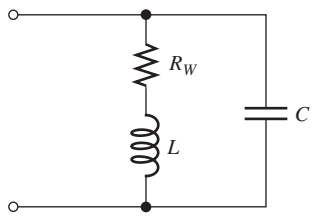

▲ FIGURE 38

A series-parallel *RLC* circuit ($Q = X_L/R_W$).

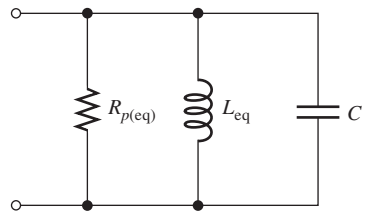

▲ FIGURE 39

Parallel equivalent form of the circuit in Figure 38.

The equivalent inductance, L_{eq}, and the equivalent parallel resistance, $R_{p(eq)}$, are given by the following formulas:

$$L_{eq} = L\left(\frac{Q^2 + 1}{Q^2}\right) \qquad \text{Equation 14}$$

$$R_{p(eq)} = R_W(Q^2 + 1) \qquad \text{Equation 15}$$

where Q is the quality factor of the coil, X_L/R_W. Derivations of these formulas are quite involved and thus are not given here. Notice in the equations that for a $Q \geq 10$, the value of L_{eq} is approximately the same as the original value of L. For example, if $L = 10$ mH and $Q = 10$, then

$$L_{eq} = 10\text{ mH}\left(\frac{10^2 + 1}{10^2}\right) = 10\text{ mH}(1.01) = 10.1\text{ mH}$$

The equivalency of the two circuits means that at a given frequency, when the same value of voltage is applied to both circuits, the same total current is in both circuits and the phase angles are the same. Basically, an equivalent circuit simply makes circuit analysis more convenient.

EXAMPLE 16

Convert the series-parallel circuit in Figure 40 to an equivalent parallel form at the given frequency.

▶ FIGURE 40

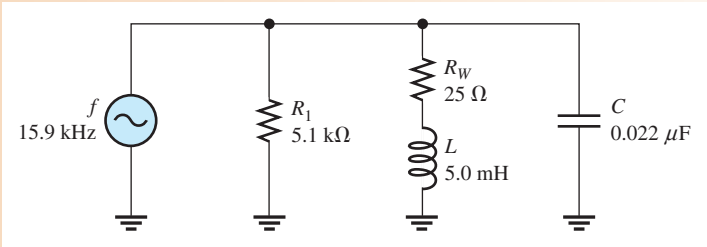

Solution Determine the inductive reactance.

$$X_L = 2\pi fL = 2\pi(15.9\text{ kHz})(5.0\text{ mH}) = 500\ \Omega$$

www.EngineeringBooksPdf.com

The Q of the coil is

$$Q = \frac{X_L}{R_W} = \frac{500\ \Omega}{25\ \Omega} = 20$$

Since $Q > 10$, then $L_{eq} \cong L = 5.0$ mH.

The equivalent parallel resistence is

$$R_{p(eq)} = R_W(Q^2 + 1) = (25\ \Omega)(20^2 + 1) = 10.0\ \text{k}\Omega$$

This equivalent resistance ($R_{p(eq)}$) appears in parallel with R_1 as shown in Figure 41(a). When combined, they give a total parallel resistance ($R_{p(tot)}$) of 3.38 kΩ, as indicated in Figure 41(b).

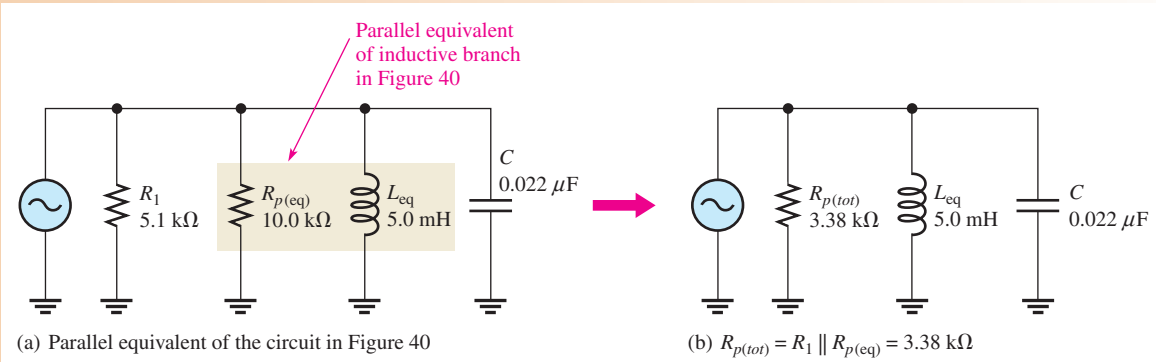

(a) Parallel equivalent of the circuit in Figure 40

(b) $R_{p(tot)} = R_1 \parallel R_{p(eq)} = 3.38\ \text{k}\Omega$

▲ FIGURE 41

Related Problem Find the equivalent parallel circuit if $R_W = 10\ \Omega$ in Figure 40.

SECTION 5 CHECKUP

1. In a three-branch parallel circuit, $R = 1500\ \Omega$, $X_C = 1000\ \Omega$, and $X_L = 500\ \Omega$ at a certain frequency. Determine the current in each branch when $V_s = 12$ V.
2. Is the circuit in Question 1 capacitive or inductive? Why?
3. Find the equivalent parallel inductance and resistance for a 20 mH coil with a winding resistance of 10 Ω at a frequency of 1 kHz.

6 PARALLEL RESONANCE

In this section, we will first look at the resonant condition in an ideal parallel *LC* circuit. Then, we will examine the more realistic case where the resistance of the coil is taken into account.

After completing this section, you should be able to

- **Analyze a circuit for parallel resonance**
  - Describe parallel resonance in an ideal circuit
  - Describe parallel resonance in a nonideal circuit
  - Explain how impedance varies with frequency

www.EngineeringBooksPdf.com

- Determine current and phase angle at resonance
- Determine parallel resonant frequency
- Discuss the effects of loading a parallel resonant circuit

Condition for Ideal Parallel Resonance

Ideally, **parallel resonance** occurs when $X_L = X_C$. The frequency at which resonance occurs is called the *resonant frequency,* just as in the series resonant circuit. When $X_L = X_C$, the two branch currents, I_C and I_L, are equal in magnitude, and, of course, they are always 180° out of phase with each other. Thus, the two currents cancel and the total current is zero, as presented in Figure 42. In this ideal case, the winding resistance of the coil is assumed to be zero.

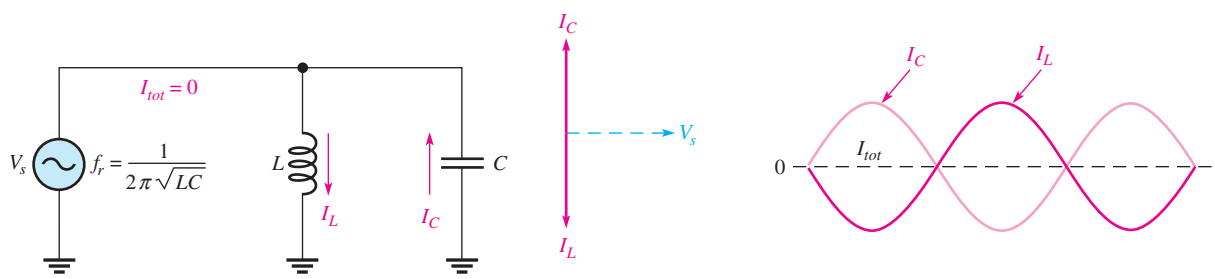

(a) Parallel circuit at resonance ($X_C = X_L$, $Z = \infty$) (b) Current phasors (c) Current waveforms

▲ FIGURE 42

An ideal parallel *LC* circuit at resonance.

Since the total current is zero, the impedance of the parallel *LC* circuit is infinitely large (∞). These ideal resonant conditions are stated as follows:

$$X_L = X_C$$
$$Z_r = \infty$$

Parallel Resonant Frequency

For an ideal parallel resonant circuit, the frequency at which resonance occurs is determined by the same formula as in series resonant circuits.

$$f_r = \frac{1}{2\pi\sqrt{LC}} \qquad \text{Equation 16}$$

Currents in a Parallel Resonant Circuit

The currents in a parallel *LC* circuit vary as the frequency is increased from below the resonant value, through resonance, and then above the resonant value. Figure 43 illustrates the general response of an ideal circuit in terms of changes in the currents.

Below the Resonant Frequency Figure 43(a) indicates the response as the source frequency is increased from zero toward f_r. At very low frequencies, X_C is very high and X_L is very low, so most of the current is through *L*. As the frequency increases, the current

www.EngineeringBooksPdf.com

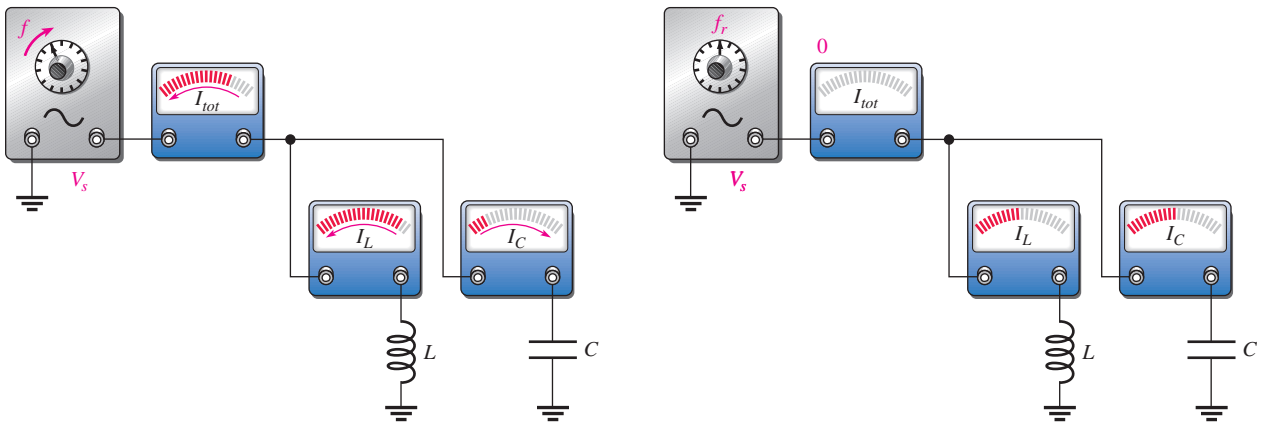

(a) As frequency is increased below resonance: $X_C > X_L$, $I_L > I_C$, I_L decreases, I_C increases, and I_{tot} decreases.

(b) At the resonant frequency: $X_C = X_L$, $I_L = I_C$, and $I_{tot} = 0$.

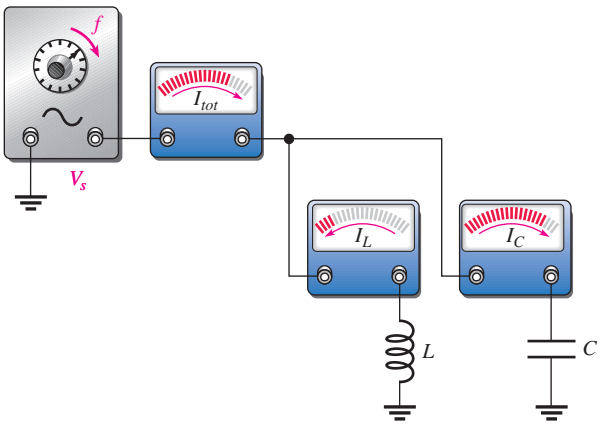

(c) As frequency is increased above resonance: $X_L > X_C$, $I_L < I_C$, I_L decreases, I_C increases, and I_{tot} increases.

▲ **FIGURE 43**

An illustration of how the currents respond in a parallel *LC* circuit as the frequency is varied from below resonance to above resonance. The source voltage amplitude is constant.

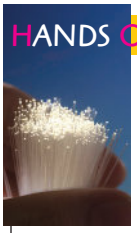

HANDS ON TIP

When you check the resonant frequency of an *LC* circuit using a function generator, the Thevenin resistance of the generator increases the *Q* of the circuit. A generator with an internal resistance of 600 Ω can significantly broaden the bandwidth of the resonant circuit. To reduce the *Q* and obtain a narrower bandwidth, a small parallel resistor can be placed across the generator output. The drawback of this method is that the signal amplitude from the generator is reduced.

through L decreases and the current through C increases, causing the total current to decrease. At all times, I_L and I_C are 180° out of phase with each other, and thus the total current is the difference of the two branch currents. During this time, the impedance is increasing, as indicated by the decrease in total current.

At the Resonant Frequency When the frequency reaches its resonant value, f_r, as shown in Figure 43(b), X_C and X_L are equal, so I_C and I_L cancel because they are equal in magnitude but opposite in phase. At this point the total current is at its minimum value of zero. Since I_{tot} is zero, Z is infinite. Thus, the ideal parallel *LC* circuit appears as an open at f_r.

Above the Resonant Frequency As the frequency is increased above resonance, as indicated in Figure 43(c), X_C continues to decrease and X_L continues to increase, causing the branch currents again to be unequal, with I_C being larger. As a result, total current increases and impedance decreases. As the frequency becomes very high, the impedance becomes very small due to the dominance of a very small X_C in parallel with a very large X_L.

In summary, the current dips to a minimum as the impedance peaks to a maximum at parallel resonance. The expression for the total current into the L and C branches is

Equation 17

$$I_{tot} = |I_L - I_C|$$

www.EngineeringBooksPdf.com

EXAMPLE 17

A resonant circuit in a communication receiver has a 680 μH inductor in parallel with a 180 pF capacitor as shown in Figure 44.

(a) What is the resonant frequency?

(b) If 2.0 V is across the parallel combination, what is the current in each component and the total current?

▶ FIGURE 44

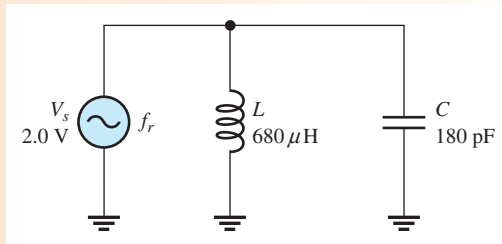

Solution

(a) The resonant frequency is

$$f_r = \frac{1}{2\pi\sqrt{LC}} = \frac{1}{2\pi\sqrt{(680\ \mu\text{H})(180\ \text{pF})}} = \mathbf{455\ kHz}\ \text{(a standard frequency)}$$

(b) $X_L = 2\pi fL = 2\pi(455\ \text{kHz})(680\ \mu\text{H}) = 1.94\ \text{k}\Omega$

$$X_C = X_L = 1.94\ \text{k}\Omega$$

$$I_L = \frac{V_s}{X_L} = \frac{2.0\ \text{V}}{1.94\ \text{k}\Omega} = \mathbf{1.03\ mA}$$

$$I_C = I_L = \mathbf{1.03\ mA}$$

The total current at resonance is

$$I_{tot} = |I_L - I_C| = \mathbf{0\ A}$$

Related Problem Find the current in the inductor and capacitor if the circuit is tuned to 470 kHz.

Open Multisim file E13-17. Determine the resonant frequency by measurement. Determine the currents through L and C at the resonant frequency.

Tank Circuit

The parallel resonant *LC* circuit is often called a **tank circuit**. The term *tank circuit* refers to the fact that the parallel resonant circuit stores energy in the magnetic field of the coil and in the electric field of the capacitor. The stored energy is transferred back and forth between the capacitor and the coil on alternate half-cycles as the current goes first one way and then the other when the inductor deenergizes and the capacitor charges, and vice versa. This concept is illustrated in Figure 45.

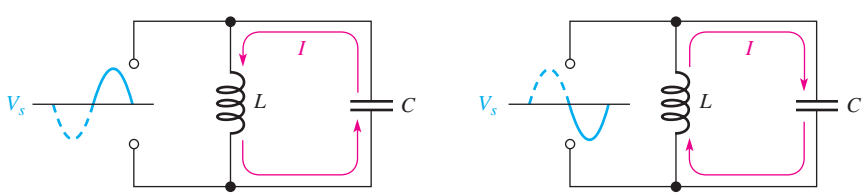

(a) The coil deenergizes as the capacitor charges. (b) The capacitor discharges as the coil energizes.

◀ FIGURE 45

Energy storage in an ideal parallel resonant tank circuit.

www.EngineeringBooksPdf.com

Parallel Resonant Conditions in a Nonideal Circuit

So far, the resonance of an ideal parallel *LC* circuit has been examined. Now let's consider resonance in a tank circuit with the winding resistance taken into account. Figure 46 shows a nonideal tank circuit and its parallel *RLC* equivalent.

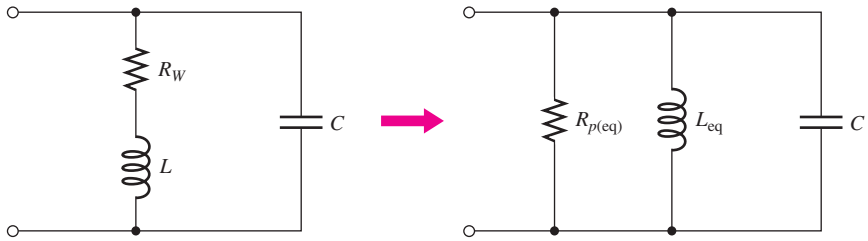

(a) Nonideal tank circuit (b) Parallel *RLC* equivalent

▶ **FIGURE 46**

A practical treatment of parallel resonant circuits includes the winding resistance.

If the winding resistance is the only resistance in the circuit, the quality factor, Q, of the circuit at resonance is simply the Q of the coil.

$$Q = \frac{X_L}{R_W}$$

In terms of circuit component values, the Q can also be expressed as

$$Q = \frac{1}{R_W}\sqrt{\frac{L}{C}}$$

These equations for Q include only the winding resistance, R_W, for the coil and neglect any loading effect due to the source resistance or a load resistor. Additional resistance in the circuit will cause Q to be lower, but this effect can be alleviated by taking the output across a series "sense" resistor. Example 23 will show how to account for loading effects in cases where a sense resistor is not used.

The expressions for the equivalent inductance and the equivalent parallel resistance were given in Equations 14 and 15 as

$$L_{eq} = L\left(\frac{Q^2 + 1}{Q^2}\right)$$

$$R_{p(eq)} = R_W(Q^2 + 1)$$

Recall that for $Q \geq 10$, $L_{eq} \cong L$.

At parallel resonance,

$$X_{L(eq)} = X_C$$

In the parallel equivalent circuit, $R_{p(eq)}$ is in parallel with an ideal coil and a capacitor, so the L and C branches act as an ideal tank circuit that has an infinite impedance at resonance, as shown in Figure 47. Therefore, the total impedance of the nonideal tank circuit at resonance can be expressed as simply the equivalent parallel resistance.

$$Z_r = R_W(Q^2 + 1)$$

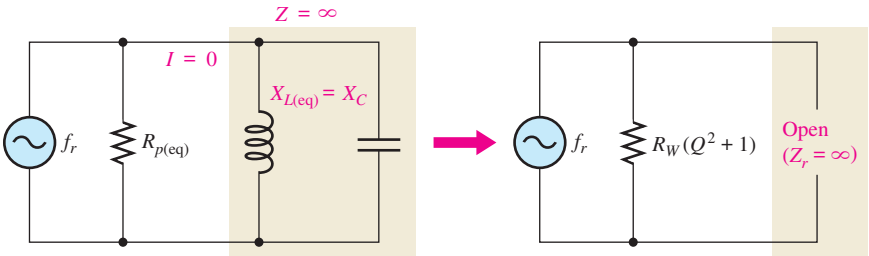

▶ **FIGURE 47**

At resonance, the parallel *LC* portion appears open and the source sees only $R_{p(eq)}$, which equals $R_W(Q^2 + 1)$.

www.EngineeringBooksPdf.com

EXAMPLE 18

Determine the impedance of the circuit in Figure 48 at the resonant frequency ($f_r \cong 17{,}794$ Hz).

▶ FIGURE 48

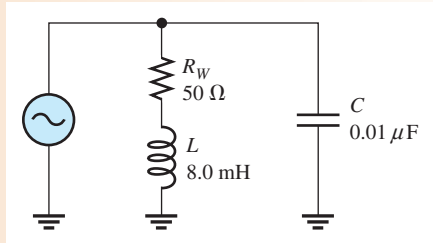

Solution Before you can calculate the impedance, you must find the quality factor. To get Q, first find the inductive reactance.

$$X_L = 2\pi f_r L = 2\pi(17{,}794\text{ Hz})(8.0\text{ mH}) = 894\ \Omega$$

$$Q = \frac{X_L}{R_W} = \frac{894\ \Omega}{50\ \Omega} = 17.9$$

$$Z_r = R_W(Q^2 + 1) = 50\ \Omega(17.9^2 + 1) = \mathbf{16.0\ k\Omega}$$

Related Problem Determine Z_r in Figure 48 if the winding resistance is 10 Ω.

Variation of the Impedance with Frequency

The impedance of a parallel resonant circuit is maximum at the resonant frequency and decreases at lower and higher frequencies, as indicated by the curve in Figure 49.

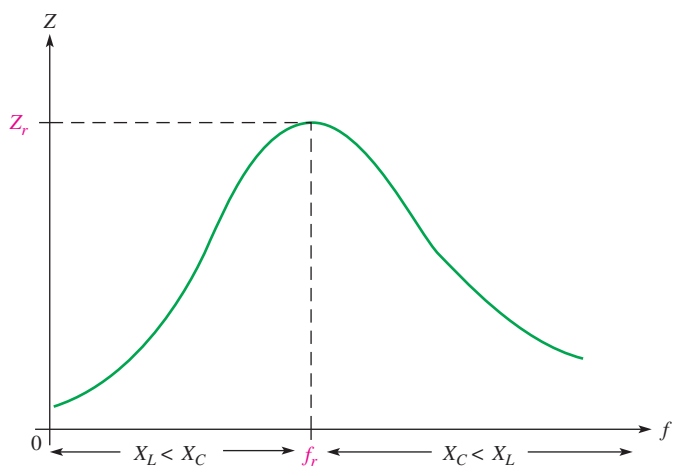

◀ FIGURE 49

Generalized impedance curve for a parallel resonant circuit. The circuit is inductive below f_r, resistive at f_r, and capacitive above f_r.

At very low frequencies, X_L is very small and X_C is very high, so the total impedance is essentially equal to that of the inductive branch. As the frequency goes up, the impedance also increases, and the inductive reactance dominates (because it is less than X_C) until the resonant frequency is reached. At this point, of course, $X_L \cong X_C$ (for $Q > 10$) and the impedance is at its maximum. As the frequency goes above resonance, the capacitive reactance dominates (because it is less than X_L) and the impedance decreases.

www.EngineeringBooksPdf.com

Current and Phase Angle at Resonance

In the ideal tank circuit, the total current from the source at resonance is zero because the impedance is infinite. In the nonideal case, there is some total current at the resonant frequency, and it is determined by the impedance at resonance.

Equation 18

$$I_{tot} = \frac{V_s}{Z_r}$$

The phase angle of the parallel resonant circuit is 0° because the impedance is purely resistive at the resonant frequency.

Parallel Resonant Frequency in a Nonideal Circuit

As you know, when the winding resistance is considered, the resonant condition is

$$X_{L(\text{eq})} = X_C$$

which can be expressed as

$$2\pi f_r L\left(\frac{Q^2 + 1}{Q^2}\right) = \frac{1}{2\pi f_r C}$$

Solving for f_r in terms of Q yields

$$f_r = \frac{1}{2\pi\sqrt{LC}}\sqrt{\frac{Q^2}{Q^2 + 1}}$$

When $Q \geq 10$, the term with the Q factors is approximately 1.

$$\sqrt{\frac{Q^2}{Q^2 + 1}} = \sqrt{\frac{100}{101}} = 0.995 \cong 1$$

Therefore, the parallel resonant frequency is approximately the same as the series resonant frequency as long as Q is equal to or greater than 10.

$$f_r \cong \frac{1}{2\pi\sqrt{LC}} \qquad \text{for } Q \geq 10$$

For the case where the R_W of the coil is the only resistance in the circuit, a precise expression for f_r in terms of the circuit component values is

Equation 19

$$f_r = \frac{\sqrt{1 - (R_W^2 C/L)}}{2\pi\sqrt{LC}}$$

This precise formula is seldom necessary and for most practical situations the simpler equation $f_r = 1/(2\pi\sqrt{LC})$ is sufficient. However, the next example illustrates the use of Equation 19.

EXAMPLE 19

Find the frequency, impedance, and total current at resonance for the circuit in Figure 50 using Equation 19.

▶ FIGURE 50

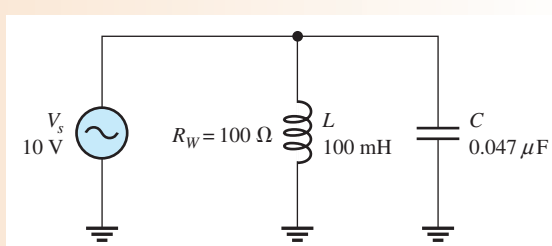

www.EngineeringBooksPdf.com

Solution The precise resonant frequency is

$$f_r = \frac{\sqrt{1 - (R_W^2 C/L)}}{2\pi\sqrt{LC}} = \frac{\sqrt{1 - [(100\,\Omega)^2(0.047\,\mu\text{F})/100\text{ mH}]}}{2\pi\sqrt{(0.047\,\mu\text{F})(100\text{ mH})}} = \mathbf{2.32\text{ kHz}}$$

Calculate impedance as follows:

$$X_L = 2\pi f_r L = 2\pi(2.32\text{ kHz})(100\text{ mH}) = 1.46\text{ k}\Omega$$

$$Q = \frac{X_L}{R_W} = \frac{1.46\text{ k}\Omega}{100\,\Omega} = 14.6$$

$$Z_r = R_W(Q^2 + 1) = 100\,\Omega(14.6^2 + 1) = \mathbf{21.4\text{ k}\Omega}$$

The total current is

$$I_{tot} = \frac{V_s}{Z_r} = \frac{10\text{ V}}{21.4\text{ k}\Omega} = \mathbf{467\ \mu A}$$

Related Problem Repeat this example using the formula $f_r = 1/(2\pi\sqrt{LC})$ and compare the results.

Open Multisim file E13-19. Determine the resonant frequency by measurement. Determine the total current and the currents through L and C at the resonant frequency. How do these results compare with the calculated values?

An External Load Resistance Affects a Tank Circuit

In a basic parallel resonant circuit with no load resistor, the Q of the circuit is determined only by the Q of the coil and some loading due to the source resistance. However, the source loading effect is complicated by frequency dependency. At resonance, the source resistance has a small current, which is due to the nonideal characteristic of the tank circuit. As the circuit moves away from resonance, this current increases due to phase shifts. To simplify the discussion, we will ignore the effect of source loading.

In most practical circuits, as illustrated in Figure 51(a), an external load (R_L) dissipates most of the power delivered by the source. In this case, the load resistor will lower the Q of the circuit—the smaller the load resistor, the lower the Q. The load resistor, R_L, effectively is in parallel with the equivalent parallel resistance of the coil, $R_{p(\text{eq})}$; both are

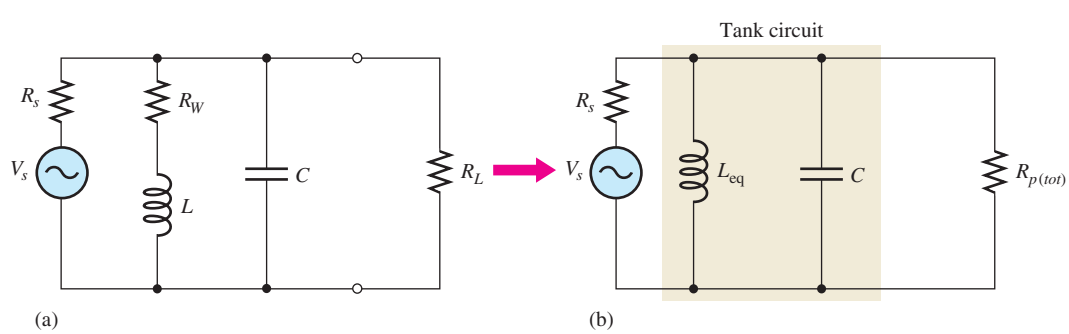

▲ FIGURE 51

Tank circuit with a load resistor and its equivalent circuit.

www.EngineeringBooksPdf.com

combined to determine the total parallel resistance, $R_{p(tot)}$, as indicated in Figure 51(b) and given as

Equation 20

$$R_{p(tot)} = R_L \| R_{p(\text{eq})}$$

Notice that in the case of an unloaded tank circuit, $R_{p(tot)}$ reduces to $R_{p(\text{eq})}$.

The overall Q, designated Q_O, is given by the approximate equation

Equation 21

$$Q_O \cong \frac{R_{p(tot)}}{X_L}$$

Notice that this equation is reversed from the Q of a series circuit or the Q of an inductor alone. However, the unloaded case for a parallel circuit will give the same result as the Q of the inductor alone, so either equation can be used with no load.

SECTION 6 CHECKUP

1. Is the impedance minimum or maximum at parallel resonance?
2. Is the current minimum or maximum at parallel resonance?
3. At ideal parallel resonance, $X_L = 1.5\ \text{k}\Omega$. What is X_C?
4. A tank circuit has the following values: $R_W = 5.0\ \Omega$, $L = 220\ \mu\text{H}$, and $C = 0.10\ \mu\text{F}$. Calculate f_r and Z_r.
5. If $Q = 25$, $L = 50$ mH, and $C = 1000$ pF, what is f_r?
6. In Question 5, if $Q = 2.5$, what is f_r?
7. In a certain tank circuit, the coil resistance is 20 Ω. What is the total impedance at resonance if $Q = 20$?

7 PARALLEL RESONANT FILTERS

Parallel resonant circuits are commonly applied to band-pass and band-stop filters. In this section, we examine these applications.

After completing this section, you should be able to

- **Analyze the operation of parallel resonant filters**
  - Show how a band-pass filter is implemented
  - Define *bandwidth*
  - Explain how loading affects selectivity
  - Show how a band-stop filter is implemented
  - Determine the resonant frequency, bandwidth, and output voltage of band-pass and band-stop parallel resonant filters

www.EngineeringBooksPdf.com

The Band-Pass Filter

A basic parallel resonant band-pass filter is shown in Figure 52. Notice that the output is taken across the tank circuit in this application.

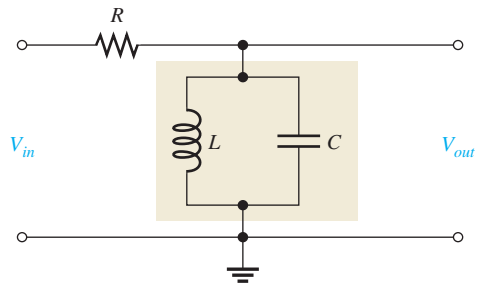

▲ FIGURE 52

A basic parallel resonant band-pass filter.

The bandwidth and cutoff frequencies for a parallel resonant band-pass filter are defined in the same way as for the series resonant circuit, and the formulas given in Section 4 still apply. General band-pass frequency response curves showing both V_{out} and I_{tot} versus frequency are given in Figures 53(a) and 53(b), respectively.

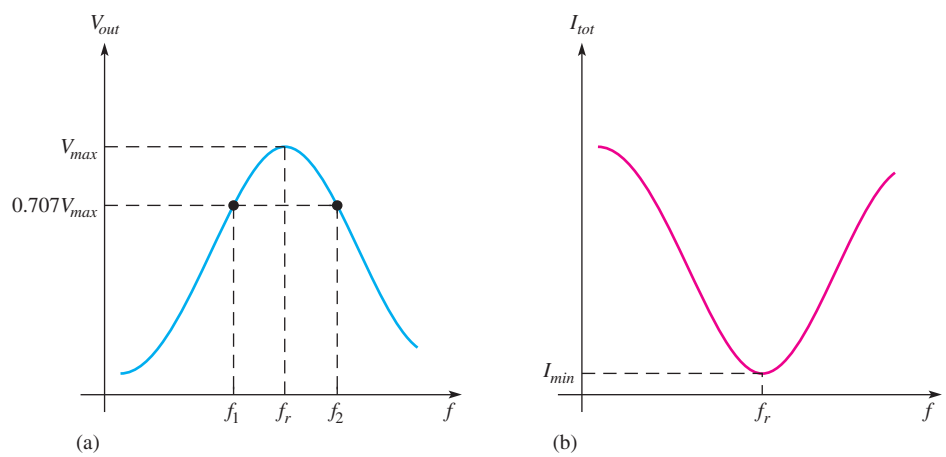

▲ FIGURE 53

Generalized frequency response curves for a parallel resonant band-pass filter.

The filtering action is as follows: At very low frequencies, the impedance of the tank circuit is very low, and therefore only a small amount of the input voltage is dropped across it; the rest is dropped across R. As the frequency increases, the impedance of the tank circuit increases, and, as a result, the output voltage increases. When the frequency reaches its resonant value, the impedance is at its maximum and most of the input voltage is developed across the tank circuit. As the frequency goes above resonance, the impedance begins to decrease, causing the output voltage to decrease. The general response of a parallel resonant band-pass filter is illustrated in Figure 54. This illustration shows how the current and the output voltage change with frequency.

www.EngineeringBooksPdf.com

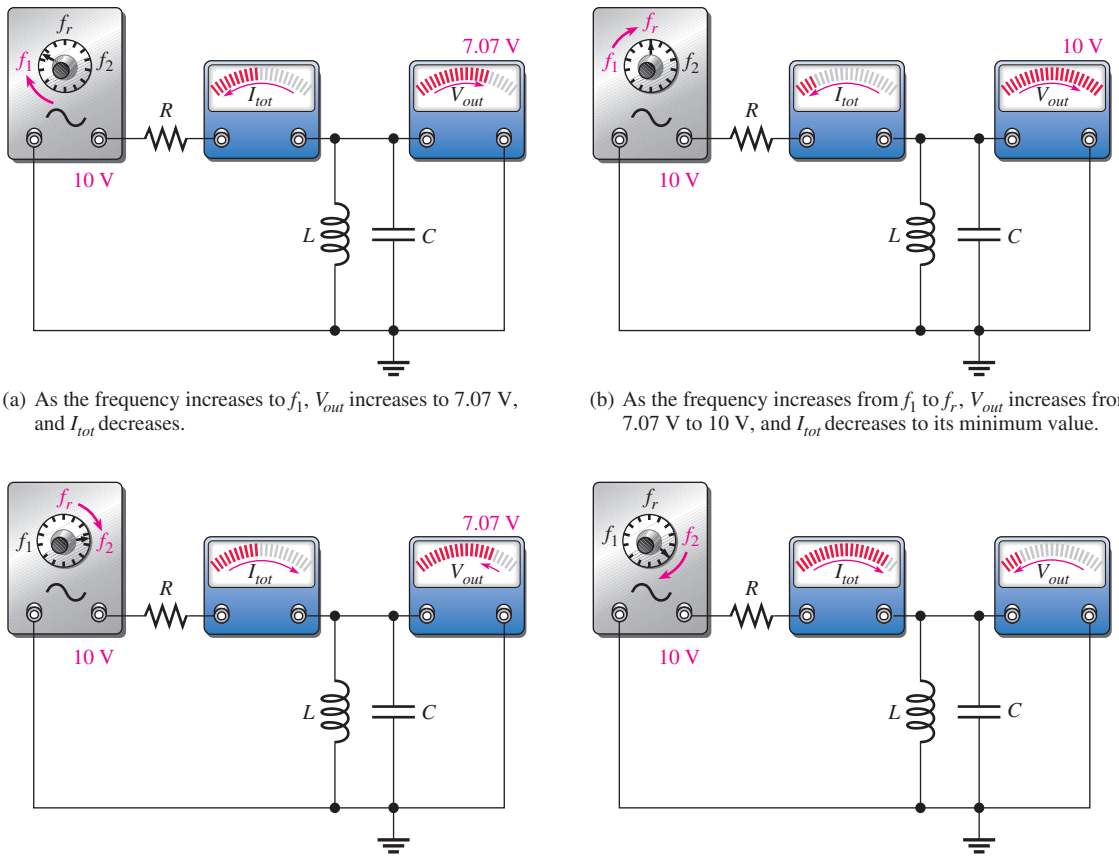

(a) As the frequency increases to f_1, V_{out} increases to 7.07 V, and I_{tot} decreases.

(b) As the frequency increases from f_1 to f_r, V_{out} increases from 7.07 V to 10 V, and I_{tot} decreases to its minimum value.

(c) As the frequency increases from f_r to f_2, V_{out} decreases from 10 V to 7.07 V, and I_{tot} increases from its minimum.

(d) As the frequency increases above f_2, V_{out} decreases below 7.07 V, and I_{tot} continues to increase.

▲ **FIGURE 54**

Example of the response of a parallel resonant band-pass filter with the input voltage at a constant 10 V rms.

EXAMPLE 20

A certain parallel resonant band-pass filter has a maximum output voltage of 4 V at f_r. What is the value of V_{out} at the cutoff frequencies?

Solution V_{out} at the cutoff frequencies is 70.7% of maximum.

$$V_{out(1)} = V_{out(2)} = 0.707V_{out(max)} = 0.707(4\text{ V}) = \mathbf{2.83\ V}$$

Related Problem What is V_{out} at the cutoff frequencies if V_{out} at the resonant frequency is 10 V?

EXAMPLE 21

A parallel resonant circuit has a lower cutoff frequency of 3.5 kHz and an upper cutoff frequency of 6 kHz. What is the bandwidth?

Solution

$$BW = f_2 - f_1 = 6\text{ kHz} - 3.5\text{ kHz} = \mathbf{2.5\ kHz}$$

Related Problem A filter has a lower cutoff frequency of 520 kHz and a bandwidth of 10 kHz. What is the upper cutoff frequency?

www.EngineeringBooksPdf.com

EXAMPLE 22

A certain parallel resonant band-pass filter has a resonant frequency of 12 kHz and a Q of 10. What is its bandwidth?

Solution

$$BW = \frac{f_r}{Q} = \frac{12\text{ kHz}}{10} = \mathbf{1.2\ kHz}$$

Related Problem A certain parallel resonant band-pass filter has a resonant frequency of 100 MHz and a bandwidth of 4 MHz. What is its Q?

Loading Effects When a resistive load is connected across the output of a filter as shown in Figure 55(a), the Q of the filter is reduced. Since $BW = f_r/Q$, the bandwidth is increased, thus reducing the selectivity. Also, the impedance of the filter at resonance is decreased because R_L effectively appears in parallel with $R_{p(\text{eq})}$. Thus, the maximum output voltage is reduced by the voltage-divider effect of $R_{p(tot)}$ and the internal source resistance R_s, as illustrated in Figure 55(b). Figure 55(c) shows the effect of a load on the specific resonant circuit described in Example 23. The effect of a load drops the peak and increases the bandwidth as shown.

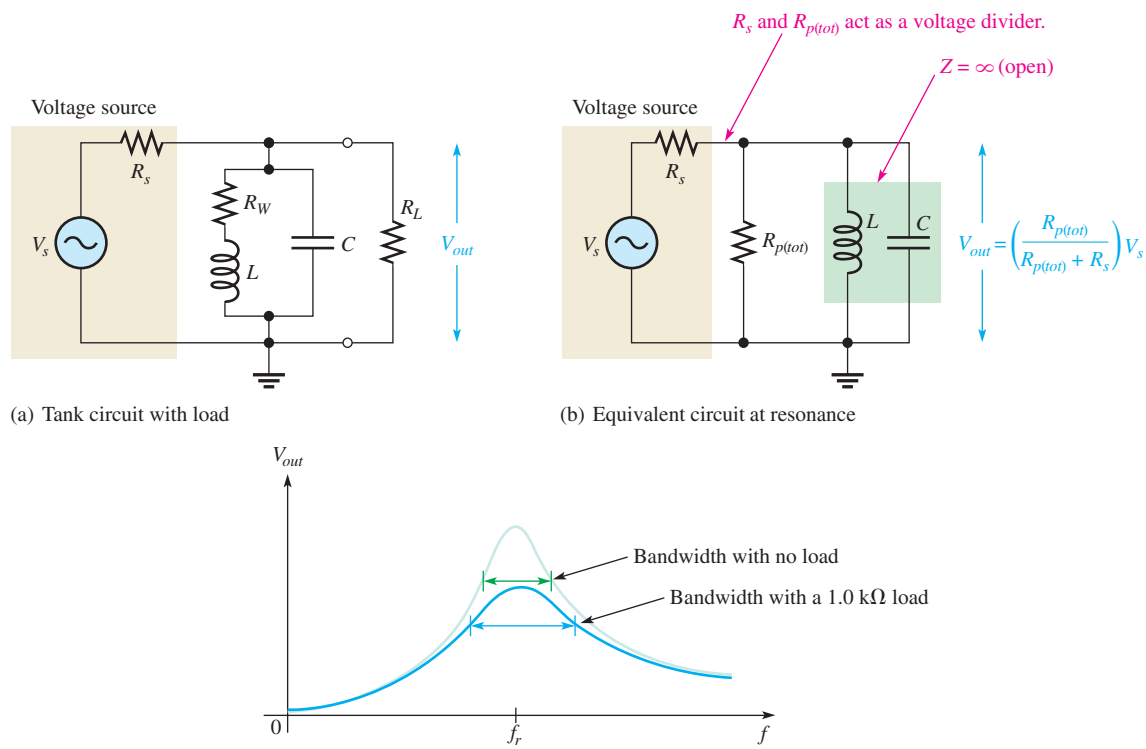

▲ **FIGURE 55**

Effects of loading on a parallel resonant band-pass filter. The resistor, R, in Figure 52 is now represented by the internal source resistance R_s.

EXAMPLE 23

(a) Determine f_r, V_{out}, and BW at resonance for the filter in Figure 56(a). The inductor has a winding resistance of 10.5 Ω. The source resistance is 50 Ω.

(b) Repeat part (a) when the filter is loaded with a 1.0 kΩ resistance and compare the results.

www.EngineeringBooksPdf.com

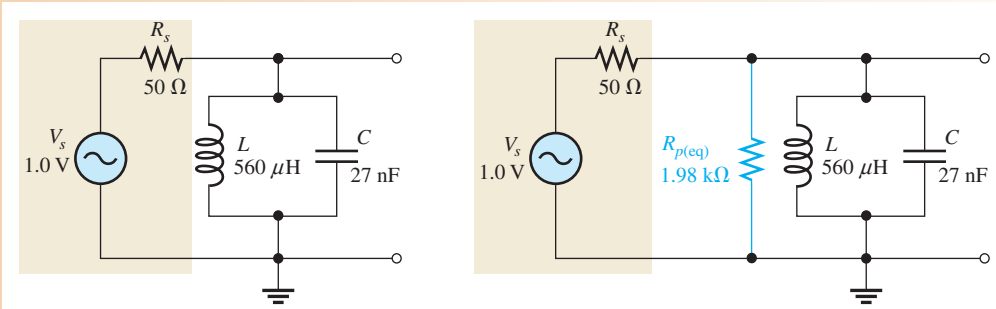

(a) Original circuit

(b) Equivalent circuit with $R_{p(eq)}$ shown in blue

▲ FIGURE 56

Solution **(a)**

$$f_r = \frac{1}{2\pi\sqrt{LC}} = \frac{1}{2\pi\sqrt{(560\ \mu\text{H})(27\ \text{nF})}} = \mathbf{40.9\ kHz}$$

The circuit is unloaded. To calculate the output voltage, begin by finding the Q of the coil and $R_{p(eq)}$.

$$X_L = 2\pi fL = 2\pi(40.9\ \text{kHz})(560\ \mu\text{H}) = 144\ \Omega$$

$$Q = \frac{X_L}{R_W} = \frac{144\ \Omega}{10.5\ \Omega} = 13.7$$

Apply Equation 15 to calculate $R_{p(eq)}$ (parallel equivalent resistance of the coil.).

$$R_{p(eq)} = R_W(Q^2 + 1) = 10.5\ \Omega(13.7 + 1) = 1.98\ \text{k}\Omega$$

Because the circuit is unloaded, $R_{p(tot)} = R_{p(eq)} = 1.98\ \text{k}\Omega$, as shown in Figure 56(b). At resonance, the tank circuit looks like an open, so apply the voltage-divider formula to $R_{p(tot)}$ and R_s to find V_{out}.

$$V_{out} = \left(\frac{R_{p(tot)}}{R_{p(tot)} + R_s}\right)V_s = \left(\frac{1.98\ \text{k}\Omega}{1.98\ \text{k}\Omega + 50\ \Omega}\right)1.0\ \text{V} = \mathbf{975\ mV}$$

To calculate the BW, apply Equation 21.

$$Q_O \cong \frac{R_{p(tot)}}{X_L} \cong \frac{1.98\ \text{k}\Omega}{144\ \Omega} = 13.8$$

Notice that this is the same Q (within round off error) as the inductor alone, because the circuit is unloaded.

$$BW = \frac{f_r}{Q_O} = \frac{40.9\ \text{kHz}}{13.8} = \mathbf{2.96\ kHz}$$

(b) The resonant frequency is not significantly affected by the load and is equal to

$$f_r = \mathbf{40.9\ kHz}$$

The load drops the output voltage because it appears to be in parallel with $R_{p(eq)}$. Apply Equation 20.

$$R_{p(tot)} = R_L \parallel R_{p(eq)} = 1.0\ \text{k}\Omega \parallel 2.07\ \text{k}\Omega = 674\ \Omega$$

Applying the voltage-divider formula,

$$V_{out} = \left(\frac{R_{p(tot)}}{R_{p(tot)} + R_s}\right)V_s = \left(\frac{674\ \Omega}{674\ \Omega + 50\ \Omega}\right)1.0\ \text{V} = \mathbf{930\ mV}$$

www.EngineeringBooksPdf.com

To calculate the BW, apply Equation 21.

$$Q_O = \frac{R_{p(tot)}}{X_L} = \frac{674\ \Omega}{144\ \Omega} = 4.68$$

$$BW = \frac{f_r}{Q_O} = \frac{40.9\ \text{kHz}}{4.68} = \mathbf{8.74\ kHz}$$

The load decreased the output voltage and caused the bandwidth to increase.

Related Problem How is Q_O affected by a larger-value load resistor?

Open the Multisim file E13-23. To view the response, the Bode plotter is connected across a "sense resistor" that acts as a current-to-voltage converter. Compare results in Multisim with the calculated values in this example. View the response on the Bode plotter. Try changing the winding resistance of the coil and see what happens.

The Band-Stop Filter

A basic parallel resonant band-stop filter is shown in Figure 57. The output is taken across a load resistor in series with the tank circuit. The load resistor has only a small effect on Q in this configuration, and generally the effect can be ignored.

The variation of the tank circuit impedance with frequency produces the familiar current response that has been previously discussed; that is, the current is minimum at resonance and increases on both sides of resonance. Since the output voltage is across the series load resistor, the output voltage follows the current, thus creating the band-stop response characteristic, as indicated in Figure 58.

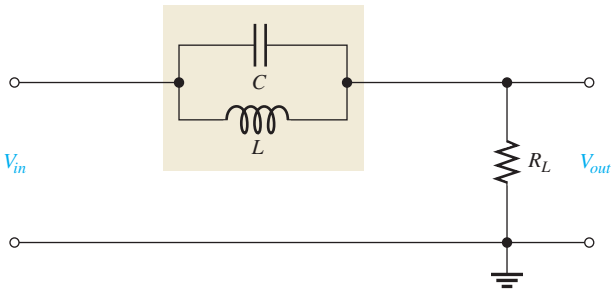

▲ FIGURE 57

A basic parallel resonant band-stop filter.

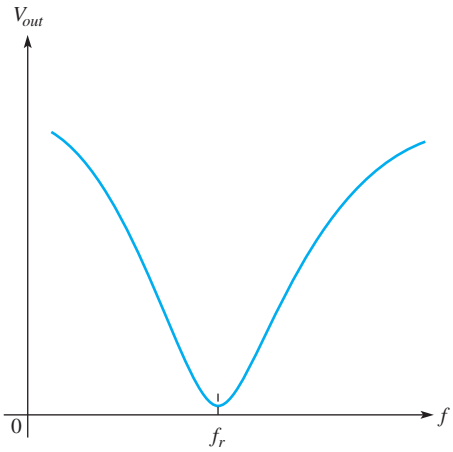

▲ FIGURE 58

Band-stop filter response.

Actually, the band-stop filter in Figure 57 can be viewed as a voltage divider created by Z_r of the tank and the load resistance. Thus, the output voltage at f_r is

$$V_{out} = \left(\frac{R_L}{R_L + Z_r}\right)V_{in}$$

www.EngineeringBooksPdf.com

EXAMPLE 24

Figure 59 shows the tank circuit from Example 23, which is used in a band-stop filter. Determine f_r and V_{out} at resonance. The winding resistance of the inductor is 10.5 Ω.

▶ FIGURE 59

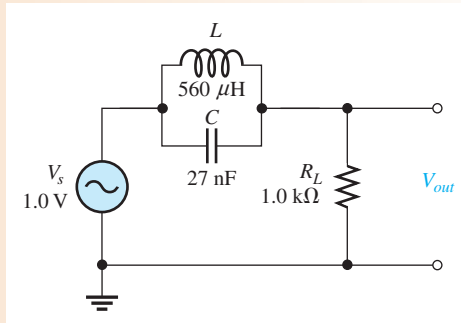

Solution The resonant frequency is

$$f_r = \frac{1}{2\pi\sqrt{LC}} = \frac{1}{2\pi\sqrt{(560\ \mu\text{H})(27\ \text{nF})}} = \mathbf{40.9\ kHz}$$

Determine V_{out} as follows:

$$X_L = 2\pi fL = 2\pi(40.9\ \text{kHz})(560\ \mu\text{H}) = 144\ \Omega$$

$$Q = \frac{X_L}{R_W} = \frac{144\ \Omega}{10.5\ \Omega} = 13.7$$

Applying Equation 15,

$$R_{p(\text{eq})} = R_W(Q^2 + 1) = 10.5\ \Omega(13.7 + 1) = 1.98\ \text{k}\Omega$$

At resonance,

$$V_{out} = \left(\frac{R_L}{R_L + R_{p(\text{eq})}}\right)V_s = \left(\frac{1.0\ \text{k}\Omega}{1.0\ \text{k}\Omega + 1.98\ \text{k}\Omega}\right)1.0\ \text{V} = \mathbf{335\ mV}$$

Related Problem What is the output at the resonant frequency if the load resistor is 470 Ω?

Open the Multisim file E13-24. Compare results in Multisim with the calculations. You can read the resonant frequency and output voltage on the Bode plotter.

SECTION 7 CHECKUP

1. How can the bandwidth of a parallel resonant filter be increased?
2. The resonant frequency of a certain high-Q ($Q > 10$) filter is 5 kHz. If the Q is lowered to 2, does f_r change and, if so, to what value?
3. What is the impedance of a tank circuit at its resonant frequency if $R_W = 75\ \Omega$ and $Q = 25$?

8 APPLICATIONS

Resonant circuits are used in a wide variety of applications, particularly in communication systems. In this section, we will look briefly at a few common communication systems applications to illustrate the importance of resonant circuits in electronic communication.

www.EngineeringBooksPdf.com

After completing this section, you should be able to

- **Discuss some applications of resonant circuits**
  - Describe a tuned amplifier application
  - Describe antenna coupling
  - Describe tuned amplifiers
  - Describe an AM radio receiver

Tuned Amplifiers

A *tuned amplifier* is a circuit that amplifies signals within a specified band. Typically, a parallel resonant circuit is used in conjunction with an amplifier to achieve the selectivity. In terms of the general operation, input signals with frequencies that range over a wide band are accepted on the amplifier's input and are amplified. The resonant circuit allows only a relatively narrow band of those frequencies to be passed on. The variable capacitor allows tuning over the range of input frequencies so that a desired frequency can be selected, as indicated in Figure 60.

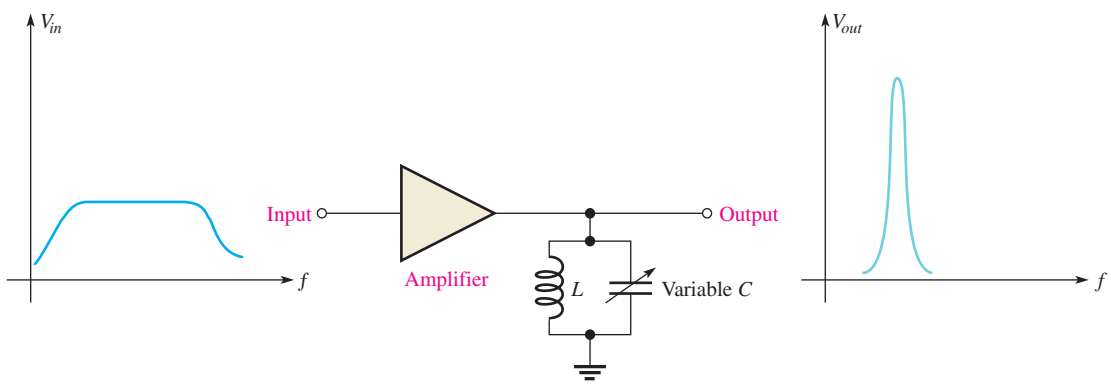

▲ FIGURE 60

A basic tuned band-pass amplifier.

Antenna Input to a Receiver

Radio signals are sent out from a transmitter via electromagnetic waves that propagate through the atmosphere. When the electromagnetic waves cut across the receiving antenna, small voltages are induced. Out of the wide range of electromagnetic frequencies, only one frequency or a limited band of frequencies must be extracted. Figure 61 shows a typical arrangement of an antenna coupled to the receiver input by a transformer. A variable capacitor is connected across the transformer secondary to form a parallel resonant circuit.

Double-Tuned Transformer Coupling in a Receiver

In some types of communication receivers, tuned amplifiers are transformer-coupled together to increase the amplification. Capacitors can be placed in parallel with the primary and secondary windings of the transformer, effectively creating two parallel resonant band-pass filters that are coupled together. This technique, illustrated in Figure 62, can result in a wider bandwidth and steeper slopes on the response curve, thus increasing the selectivity for a desired band of frequencies.

www.EngineeringBooksPdf.com

▶ FIGURE 61

Resonant coupling from an antenna.

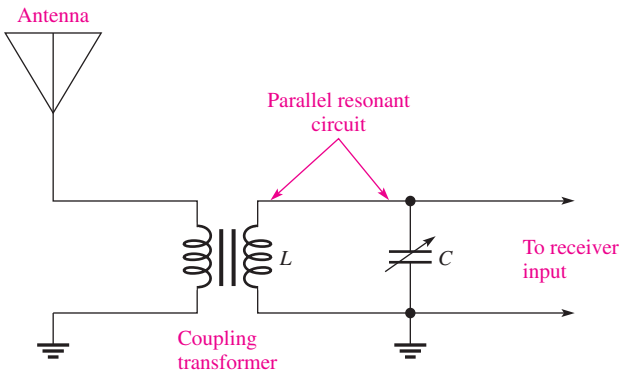

▶ FIGURE 62

Double-tuned amplifiers.

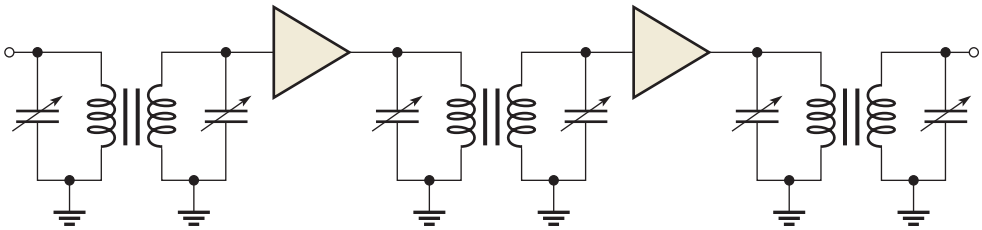

Audio Crossover Networks

Most quality stereo systems have speakers designed for specific parts of the audio frequency spectrum. Audio crossover networks are filter networks that separate the audio signal into different frequency bands for the speakers while maintaining an overall flat response. Crossover networks can be passive (meaning only inductors, capacitors, and resistors are used) or active (meaning transistors and operational amplifiers are used).

A three-way passive network includes a band-pass filter that is essentially a low-Q resonant filter designed to have a broad flat response. The design of passive crossover networks is complicated because of various factors that affect the overall response (such as variations of the speaker's impedance as a function of frequency), but the basic concept is simple. The network separates the audio spectrum into three parts and passes each part to the appropriate speaker, as indicated in Figure 63. The network has three filters: a high-pass filter that passes high frequencies to the tweeter (or high-frequency speaker), a band-pass filter that passes middle frequencies to the mid-range speaker, and a low-pass filter that passes low frequencies to the woofer (or low-frequency speaker).

▶ FIGURE 63

A crossover network uses filters to separate the audio frequency bands.

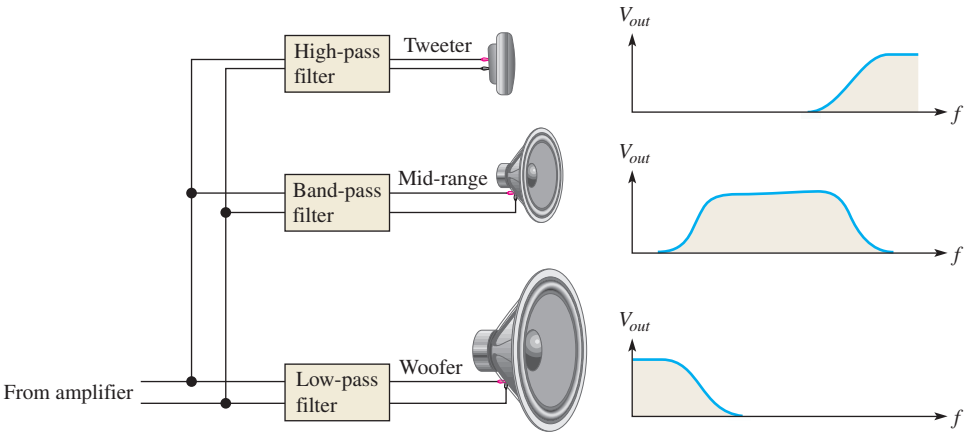

www.EngineeringBooksPdf.com

Superheterodyne Receiver

Another good example of resonant circuit applications is in the common AM (amplitude modulation) receiver. The AM broadcast band ranges from 535 kHz to 1605 kHz. Each AM station is assigned a 10 kHz bandwidth within that range. The tuned circuits are designed to pass only the signals from the desired radio station, rejecting all others. To reject stations outside the one that is tuned, the tuned circuits must be selective, passing on only the signals in the 10 kHz band and rejecting all others. Too much selectivity is not desirable either however. If the bandwidth is too narrow, some of the higher frequency modulated signals will be rejected, resulting in a loss of fidelity. Ideally, the resonant circuit must reject signals that are not in the desired passband. A simplified block diagram of a superheterodyne AM receiver is shown in Figure 64.

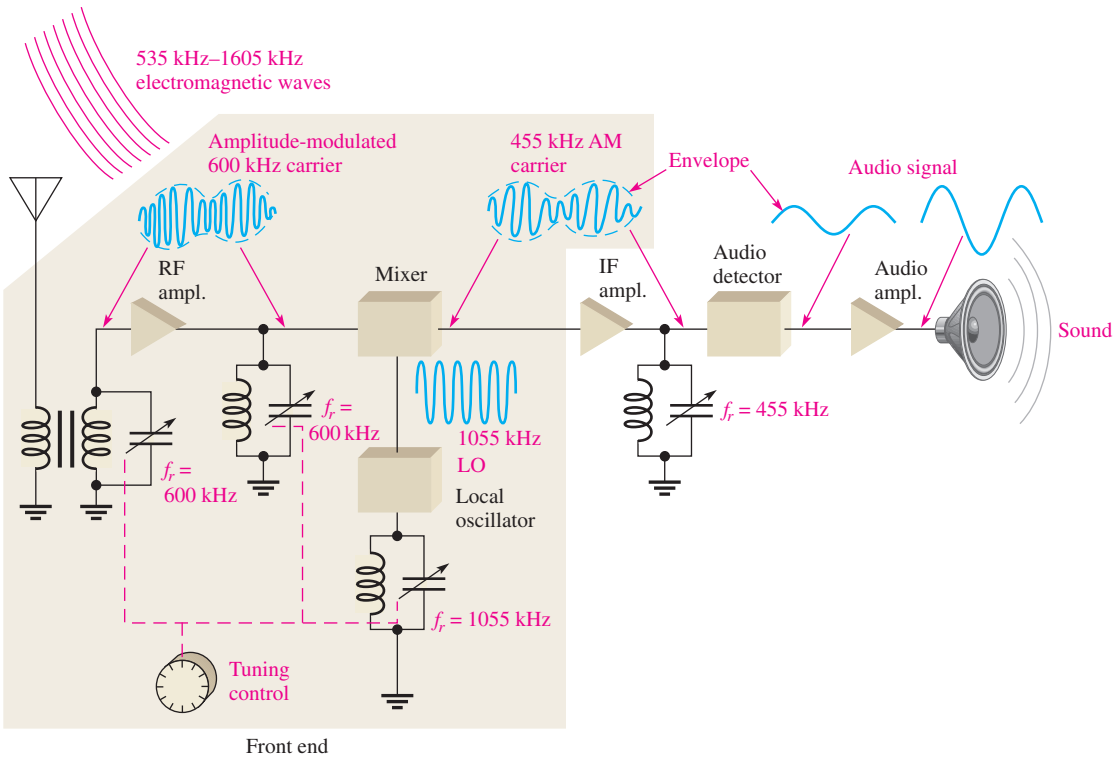

▲ **FIGURE 64**

A simplified diagram of a superheterodyne AM radio broadcast receiver showing the application of tuned resonant circuits.

There are basically three parallel resonant circuits in the front end of the receiver. Each of these resonant circuits is gang-tuned by capacitors; that is, the capacitors are mechanically or electronically linked together so that they change together as a station is selected. The front end is tuned to receive a desired station, for example, one that transmits at 600 kHz. The input resonant circuit from the antenna and the RF (radio frequency) amplifier resonant circuit select only a frequency of 600 kHz out of all the frequencies crossing the antenna.

The actual audio (sound) signal is carried by the 600 kHz carrier frequency by modulating the amplitude of the carrier so that it follows the audio signal as indicated. The variation in the amplitude of the carrier corresponding to the audio signal is called the *envelope.* The 600 kHz is then applied to a circuit called the *mixer.*

The local oscillator (LO) is tuned to a frequency that is 455 kHz above the selected frequency (1055 kHz, in this case). By a process called *heterodyning* or *beating,* the AM signal and the local oscillator signal are mixed together, and the 600 kHz AM signal is converted by the mixer to a 455 kHz AM signal (1055 kHz − 600 kHz = 455 kHz).

www.EngineeringBooksPdf.com

The 455 kHz is the intermediate frequency (IF) for standard AM receivers. No matter which station within the broadcast band is selected, its frequency is always converted to the 455 kHz IF. The amplitude-modulated IF is amplified by the IF amplifier which is tuned to 455 kHz. The output of the IF amplifier is applied to an audio detector which removes the IF, leaving only the envelope which is the audio signal. The audio signal is then amplified and applied to the speaker.

SECTION 8 CHECKUP

1. Generally, why is a tuned resonant circuit necessary when a signal is coupled from an antenna to the input of a receiver?
2. What is the advantage of using an intermediate frequency in an AM radio?
3. What is meant by *ganged tuning?*

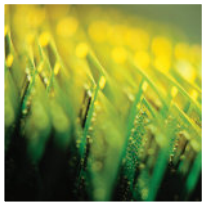

Application Assignment

PUTTING YOUR KNOWLEDGE TO WORK

In this application assignment, you have filter to evaluate, which is some type of resonant filter with no specifications available. Your assignment is to develop a frequency response curve and determine the resonant frequency and the bandwidth.

You will use oscilloscope measurements to determine the frequency response characteristics of the filter. The internal circuitry and component values are of no concern in this case.

Step 1: Measuring the Frequency Response

Based on the series of five oscilloscope measurements in Figure 65, create a frequency response curve (plot of output voltage versus frequency) for the filter.

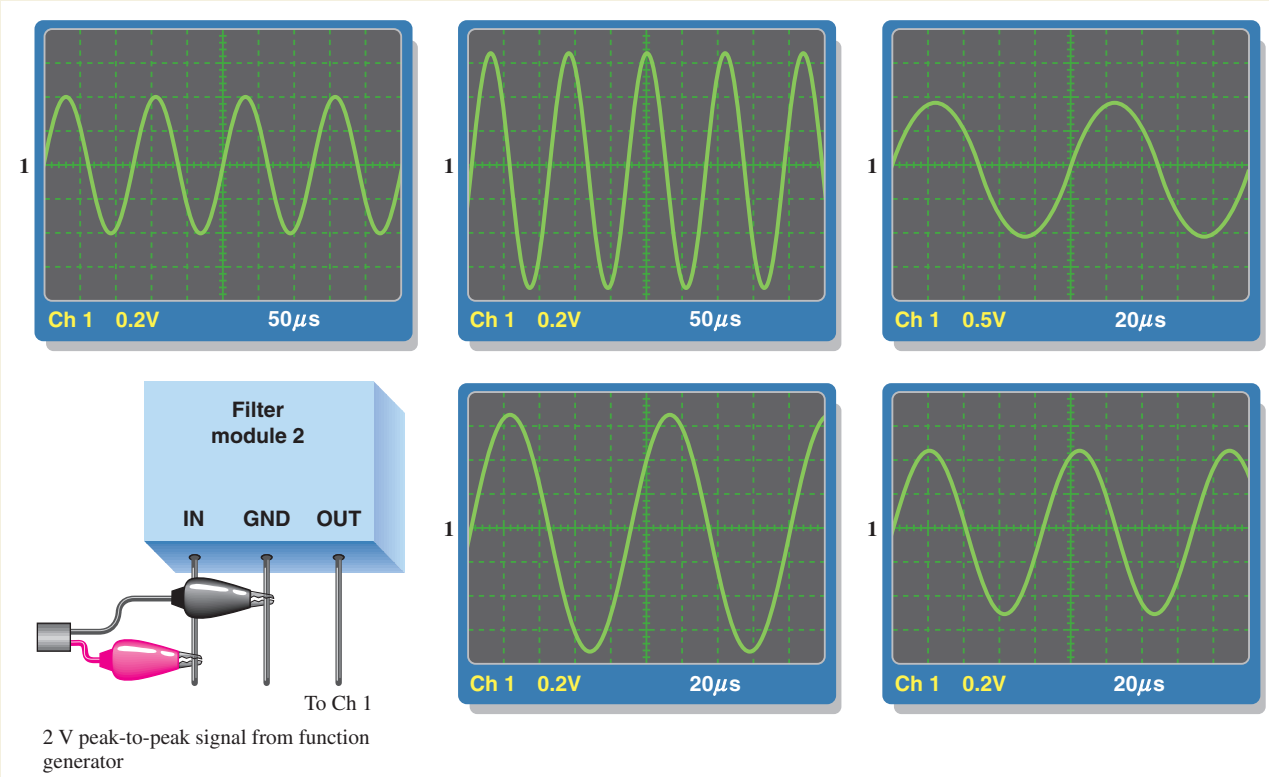

▲ **FIGURE 65**

Frequency response measurements.

www.EngineeringBooksPdf.com

Step 2: Analyzing the Response Curve

Specify the type of filter and determine the resonant frequency and the bandwidth.

Review

1. What are the half-power frequencies for the filter in this assignment?
2. From the measurements in Figure 65, can you determine the circuit arrangement or component values?

SUMMARY

- X_L and X_C have opposing effects in an *RLC* circuit.
- In a series *RLC* circuit, the larger reactance determines the net reactance of the circuit.
- In a parallel *RLC* circuit, the smaller reactance determines the net reactance of the circuit.

Series Resonance

- The reactances are equal.
- The impedance is minimum and equal to the resistance.
- The current is maximum.
- The phase angle is zero.
- The voltages across L and C are equal in magnitude and, as always, 180° out of phase with each other and thus they cancel.

Parallel Resonance

- The reactances are approximately equal for $Q \geq 10$.
- The impedance is maximum.
- The current is minimum and, ideally, equal to zero.
- The phase angle is zero.
- The currents in the L and C branches are equal in magnitude and, as always, 180° out of phase with each other and thus they cancel.
- A band-pass filter passes frequencies between the lower and upper critical frequencies and rejects all others.
- A band-stop filter rejects frequencies between its lower and upper critical frequencies and passes all others.
- The bandwidth of a resonant filter is determined by the quality factor (Q) of the circuit and the resonant frequency.
- Cutoff frequencies are also called −3 dB frequencies or critical frequencies.
- The output voltage is 70.7% of its maximum at the cutoff frequencies.

KEY TERMS

Band-pass filter A resonant circuit that passes a range of frequencies lying between two cutoff frequencies and rejects frequencies above and below the range.

Band-stop filter A resonant circuit that rejects a range of frequencies lying between two cutoff frequencies and passes frequencies above and below the range.

Cutoff frequency (f_c) The frequency at which the output voltage of a filter is 70.7% of the maximum output voltage.

Decibel (dB) A unit of logarithmic expression ten times the logarithm of the ratio of two powers or twenty times the logarithm of the ratio of two voltages measured across equal resistances.

www.EngineeringBooksPdf.com

Half-power frequency The frequency at which the output power of a filter is 50% of the maximum (the output voltage is 70.7% of maximum); another name for *critical frequency* or *cutoff frequency*.

Parallel resonance In a parallel *RLC* circuit, the condition where the impedance is maximum and the reactances are equal.

Resonant frequency The frequency at which a resonant condition occurs in a series or parallel *RLC* circuit.

Selectivity A measure of how effectively a resonant circuit passes certain frequencies and rejects others. The narrower the bandwidth, the greater the selectivity.

Series resonance In a series *RLC* circuit, the condition where the impedance is minimum and the reactances are equal.

FORMULAS

1	$X_{tot} = \lvert X_L - X_C \rvert$	Total series reactance (absolute value)
2	$Z_{tot} = \sqrt{R^2 + X_{tot}^2}$	Total series *RLC* impedance
3	$\theta = \tan^{-1}\left(\frac{X_{tot}}{R}\right)$	Series *RLC* phase angle
4	$f_r = \frac{1}{2\pi\sqrt{LC}}$	Series resonant frequency
5	$BW = f_2 - f_1$	Bandwidth
6	$\text{dB} = 10\log\left(\frac{P_{out}}{P_{in}}\right)$	Decibel formula for voltage ratio
7	$\text{dB} = 20\log\left(\frac{V_{out}}{V_{in}}\right)$	Decibel formula for power ratio
8	$Q = \frac{X_L}{R}$	Series resonant quality factor
9	$BW = \frac{f_r}{Q}$	Bandwidth
10	$Y = \sqrt{G^2 + B_{tot}^2}$	Parallel *RLC* admittance
11	$\theta = \tan^{-1}\left(\frac{B_{tot}}{G}\right)$	Parallel *RLC* phase angle
12	$I_{tot} = \sqrt{I_R^2 + I_{CL}^2}$	Total parallel *RLC* current
13	$\theta = \tan^{-1}\left(\frac{I_{CL}}{I_R}\right)$	Parallel *RLC* phase angle
14	$L_{eq} = L\left(\frac{Q^2 + 1}{Q^2}\right)$	Equivalent parallel inductance
15	$R_{p(eq)} = R_W(Q^2 + 1)$	Equivalent parallel resistance
16	$f_r = \frac{1}{2\pi\sqrt{LC}}$	Ideal parallel resonant frequency
17	$I_{tot} = \lvert I_L - I_C \rvert$	Total parallel *LC* current (absolute value)
18	$I_{tot} = \frac{V_s}{Z_r}$	Total current at parallel resonance
19	$f_r = \frac{\sqrt{1 - (R_W^2 C/L)}}{2\pi\sqrt{LC}}$	Parallel resonant frequency (exact)
20	$R_{p(tot)} = R_L \parallel R_{p(eq)}$	Total parallel resistance
21	$Q_O \cong \frac{R_{p(tot)}}{X_{L(eq)}}$	Overall Q of a parallel *RLC* circuit

www.EngineeringBooksPdf.com

TRUE/FALSE QUIZ

Answers are at the end of the chapter.

1. A series *RLC* circuit can have a higher voltage than the source voltage across the resistor.
2. The impedance of a series *RLC* circuit is dependent on the source voltage.
3. Above the resonant frequency, a series resonant circuit will look inductive and current will lag the voltage.
4. A band-pass filter can be constructed from a *RLC* circuit.
5. A parallel resonant band-stop filter has minimum impedance at the resonant frequency.
6. The upper and lower cutoff frequencies of a band-stop filter determine the bandwidth.
7. The Q of an inductor is dependent on the frequency at which it is measured.
8. The Q of a band-pass filter does not affect the bandwidth.
9. In a parallel *RLC* circuit, the total impedance is always greater than the resistance.
10. At resonance, the current in a parallel resonant circuit is the same in all components.

SELF-TEST

Answers are at the end of the chapter.

1. The total reactance of a series *RLC* circuit at resonance is
   (a) zero **(b)** equal to the resistance **(c)** infinity **(d)** capacitive
2. The phase angle of a series *RLC* circuit at resonance is
   (a) $-90°$ **(b)** $+90°$ **(c)** $0°$ **(d)** dependent on the reactance
3. The impedance at the resonant frequency of a series *RLC* circuit with $L = 15$ mH, $C = 0.015\ \mu$F, and $R_W = 80\ \Omega$ is
   (a) 15 kΩ **(b)** 80 Ω **(c)** 30 Ω **(d)** 0 Ω
4. In a series *RLC* circuit that is operating below the resonant frequency, the current
   (a) is in phase with the source voltage
   (b) lags the source voltage
   (c) leads the source voltage
5. If the value of C in a series *RLC* circuit is increased, the resonant frequency
   (a) is not affected **(b)** increases
   (c) remains the same **(d)** decreases
6. In a certain series resonant circuit, $V_C = 150$ V, $V_L = 150$ V, and $V_R = 50$ V. The value of the source voltage is
   (a) 150 V **(b)** 300 V **(c)** 50 V **(d)** 350 V
7. A certain series resonant band-pass filter has a bandwidth of 1 kHz. If the existing coil is replaced with one having a lower value of Q, the bandwidth will
   (a) increase **(b)** decrease **(c)** remain the same **(d)** be more selective
8. At frequencies below resonance in a parallel *RLC* circuit, the current
   (a) leads the source voltage
   (b) lags the source voltage
   (c) is in phase with the source voltage
9. The total current into the L and C branches of a parallel circuit at resonance is ideally
   (a) maximum **(b)** low **(c)** high **(d)** zero
10. To tune a parallel resonant circuit to a lower frequency, the capacitance should be
    (a) increased **(b)** decreased **(c)** left alone **(d)** replaced with inductance
11. The resonant frequency of a parallel circuit is the same as a series circuit using the same components when
    (a) the Q is very low **(b)** the Q is very high **(c)** there is no resistance
12. If the resistance in parallel with a parallel resonant filter is reduced, the bandwidth
    (a) disappears **(b)** decreases **(c)** becomes sharper **(d)** increases

www.EngineeringBooksPdf.com

PROBLEMS

Answers to odd-numbered problems are at the end of the chapter.

BASIC PROBLEMS

SECTION 1 Impedance and Phase Angle of Series *RLC* Circuits

1. A certain series *RLC* circuit operates at a frequency of 5 kHz and has the following values: $R = 10\,\Omega$, $C = 0.047\,\mu$F, and $L = 5$ mH. Determine the impedance and phase angle. What is the total reactance?
2. Find the impedance in Figure 66.
3. If the frequency of the source voltage in Figure 66 is doubled from the value that produces the indicated reactances, how does the impedance change?

▶ FIGURE 66

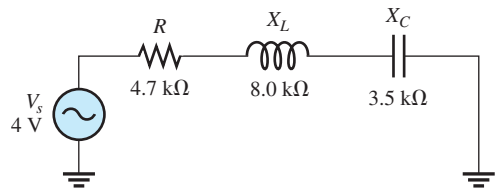

SECTION 2 Analysis of Series *RLC* Circuits

4. For the circuit in Figure 66, find I_{tot}, V_R, V_L, and V_C.
5. Draw the voltage phasor diagram for the circuit in Figure 66.
6. Analyze the circuit in Figure 67 for the following ($f = 25$ kHz):
   (a) I_{tot} **(b)** P_{true} **(c)** P_r **(d)** P_a

▶ FIGURE 67

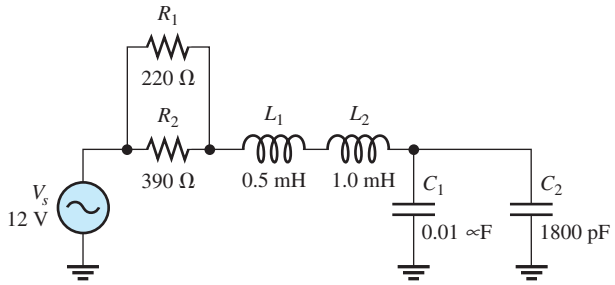

SECTION 3 Series Resonance

7. For the circuit in Figure 66, is the resonant frequency higher or lower than the value indicated by the reactances?
8. For the circuit in Figure 68, determine the voltage across *R* at resonance.

▶ FIGURE 68

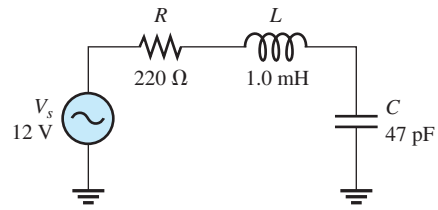

9. Find X_L, X_C, Z, and I at the resonant frequency in Figure 68.
10. A certain series resonant circuit has a maximum current of 50 mA and a V_L of 100 V. The source voltage is 10 V. What is Z? What are X_L and X_C?

www.EngineeringBooksPdf.com

11. For the *RLC* circuit in Figure 69, determine the resonant frequency and the cutoff frequencies.

▶ FIGURE 69

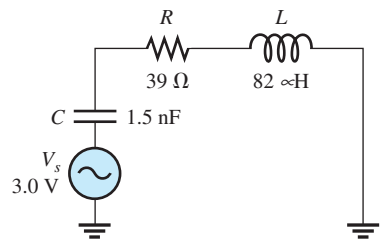

12. What is the value of the current at the half-power points in Figure 69?

SECTION 4 Series Resonant Filters

13. Determine the resonant frequency for each filter in Figure 70. Are these filters band-pass or band-stop types?

▶ FIGURE 70

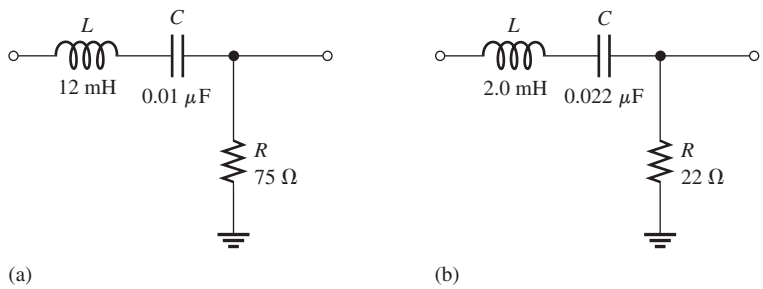

14. Assuming that the coils in Figure 70 have a winding resistance of 10 Ω, find the bandwidth for each filter.

15. Determine f_r and BW for each filter in Figure 71.

▶ FIGURE 71

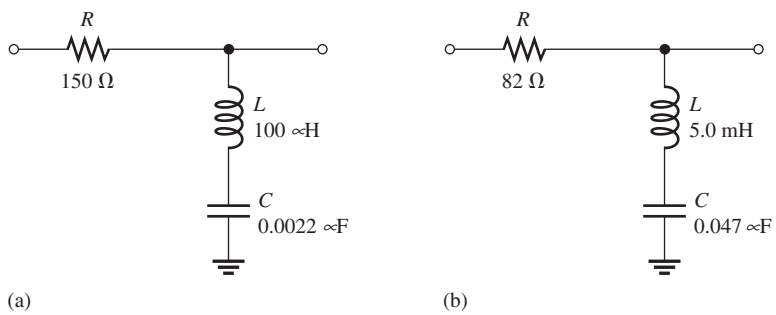

SECTION 5 Parallel *RLC* Circuits

16. Find the total impedance of the circuit in Figure 72.

▶ FIGURE 72

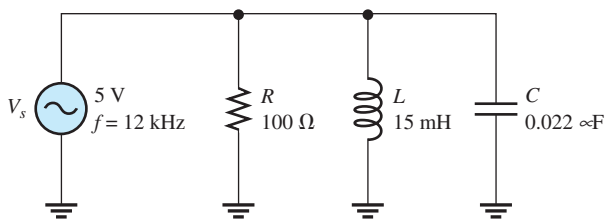

www.EngineeringBooksPdf.com

17. Is the circuit in Figure 72 capacitive or inductive? Explain.

18. For the circuit in Figure 72, find all the currents and voltages.

19. Find the total impedance for the circuit in Figure 73.

▶ FIGURE 73

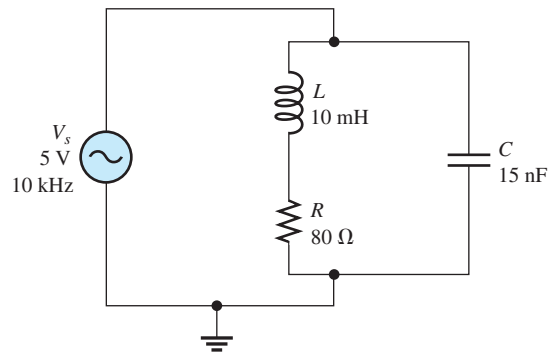

SECTION 6 Parallel Resonance

20. What is the impedance of an ideal parallel resonant circuit (no resistance in either branch)?

21. Find Z at resonance and f_r for the tank circuit in Figure 74.

22. How much current is drawn from the source in Figure 74 at resonance? What are the inductive current and the capacitive current at the resonant frequency?

▶ FIGURE 74

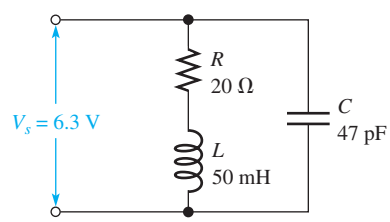

SECTION 7 Parallel Resonant Filters

23. At resonance, $X_L = 2\ \text{k}\Omega$ and $R_W = 25\ \Omega$ in a parallel resonant band-pass filter. The resonant frequency is 5 kHz. Determine the bandwidth.

24. If the lower cutoff frequency is 2400 Hz and the upper cutoff frequency is 2800 Hz, what is the bandwidth?

25. In a certain resonant circuit, the power to the load at resonance is 2.75 W. What is the power at the lower and upper cutoff frequencies?

26. What values of L and C should be used in a tank circuit to obtain a resonant frequency of 8 kHz? The bandwidth must be 800 Hz. The winding resistance of the coil is 10 Ω.

27. A parallel resonant circuit has a Q of 50 and a BW of 400 Hz. If Q is doubled, what is the bandwidth for the same f_r?

28. A parallel resonant band-stop filter is needed to reject 60 Hz power line noise. What size should the inductor be if the capacitor is 200 μF?

29. Draw the circuit described in Problem 28 if the output is taken across a 220 Ω resistor.

ADVANCED PROBLEMS

30. For each following case, express the voltage ratio in decibels:

(a) $V_{in} = 1\ \text{V}, V_{out} = 1\ \text{V}$ **(b)** $V_{in} = 5\ \text{V}, V_{out} = 3\ \text{V}$

(c) $V_{in} = 10\ \text{V}, V_{out} = 7.07\ \text{V}$ **(d)** $V_{in} = 25\ \text{V}, V_{out} = 5\ \text{V}$

www.EngineeringBooksPdf.com

31. Find the current through each component in Figure 75. Find the voltage across each component.

32. Determine whether there is a value of C that will make $V_{ab} = 0$ V in Figure 76. If not, explain.

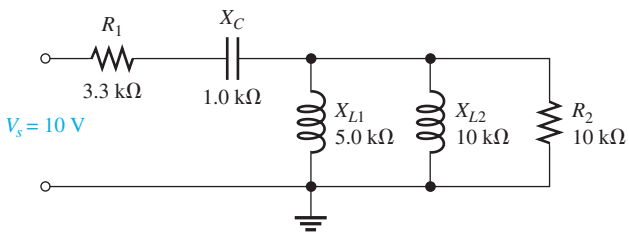

▲ FIGURE 75

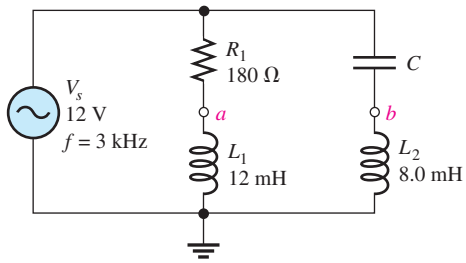

▲ FIGURE 76

33. If the value of C is $0.22\ \mu$F, how much current is through each branch in Figure 76? What is the total current?

34. Determine the resonant frequencies in Figure 77 and find V_{out} at each resonant frequency.

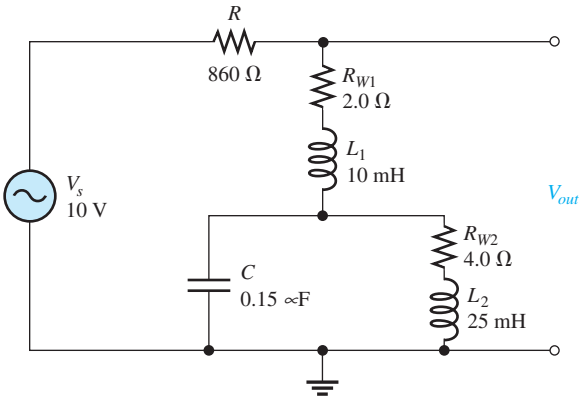

▲ FIGURE 77

35. Design a band-pass filter using a parallel resonant circuit to meet the following specifications: $BW = 500$ Hz, $Q = 40$, $I_{C(max)} = 20$ mA, $V_{C(max)} = 2.5$ V.

36. Design a circuit in which the following series resonant frequencies are switch-selectable: 500 kHz, 1000 kHz, 1500 kHz, 2000 kHz.

37. Design a parallel-resonant network using a single coil and switch-selectable capacitors to produce the following resonant frequencies: 8 MHz, 9 MHz, 10 MHz, and 11 MHz. Assume a $10\ \mu$H coil with a winding resistance of 5 Ω.

MULTISIM TROUBLESHOOTING PROBLEMS

38. Open file P13-38; files are found at www.pearsonhighered.com/floyd/. Determine if there is a fault and, if so, identify it.

39. Open file P13-39. Determine if there is a fault and, if so, identify it.

40. Open file P13-40. Determine if there is a fault and, if so, identify it.

41. Open file P13-41. Determine if there is a fault and, if so, identify it.

42. Open file P13-42. Determine if there is a fault and, if so, identify it.

43. Open file P13-43. Determine if there is a fault and, if so, identify it.

www.EngineeringBooksPdf.com

ANSWERS

SECTION CHECKUPS

SECTION 1 Impedance and Phase Angle of Series *RLC* Circuits

1. The circuit is inductive if $X_L > X_C$ and capacitive if $X_C > X_L$.
2. $X_{tot} = |X_L - X_C| = 70\ \Omega$; The circuit is capacitive.
3. $Z = \sqrt{R^2 + X_{tot}^2} = 83.2\ \Omega$; $\theta = \tan^{-1}(X_{tot}/R) = 57.3°$; Current is leading V_s.

SECTION 2 Analysis of Series *RLC* Circuits

1. $V_s = \sqrt{V_R^2 + (V_C - V_L)^2} = 38.4\ V$
2. Current leads V_s because the circuit is capacitive.
3. $X_{tot} = |X_L - X_C| = 6\ \text{k}\Omega$

SECTION 3 Series Resonance

1. Series resonance occurs when $X_L = X_C$.
2. The current is maximum because the impedance is minimum.
3. $f_r = 1/(2\pi\sqrt{LC}) = 159\ \text{kHz}$
4. It is capacitive because $X_C > X_L$.

SECTION 4 Series Resonant Filters

1. $V_{out} = 0.707(15\ \text{V}) = 10.6\ \text{V}$
2. $BW = f_r/Q = 10\ \text{kHz}$
3. Current is maximum; output voltage is minimum.

SECTION 5 Parallel *RLC* Filters

1. $I_R = V_s/R = 8.0\ \text{mA}$; $I_C = V_s/X_C = 12.0\ \text{mA}$; $I_L = V_s/X_L = 24.0\ \text{mA}$
2. The circuit is inductive ($X_L < X_C$).
3. $L_{\text{eq}} = L[(Q^2 + 1)/Q^2] = 20.1\ \text{mH}$; $R_{p(\text{eq})} = R_W(Q^2 + 1) = 1589\ \Omega$

SECTION 6 Parallel Resonance

1. The impedance is maximum.
2. The current is minimum.
3. At ideal parallel resonance, $X_C = X_L = 1.5\ \text{k}\Omega$.
4. $f_r = \sqrt{1 - (R_W^2C/L)}/2\pi\sqrt{LC} = 33.7\ \text{kHz}$; $Z_r = R_W(Q^2 + 1) = 440\ \Omega$
5. $f_r = 1/(2\pi\sqrt{LC}) = 22.5\ \text{kHz}$
6. $f_r = \sqrt{Q^2/(Q^2 + 1)}/2\pi\sqrt{LC} = 20.9\ \text{kHz}$
7. $Z_r = R_W(Q^2 + 1) = 8.02\ \text{k}\Omega$

SECTION 7 Parallel Resonant Filters

1. The bandwidth can be increased by reducing the parallel resistance.
2. f_r changes to 4.47 kHz.
3. $Z_r = R_W(Q^2 + 1) = 47.0\ \text{k}\Omega$

SECTION 8 Applications

1. A tuned resonant circuit is used to select a narrow band of frequencies.
2. The same tuned circuits can be used no matter what station is selected.
3. Several variable capacitors (or inductors) whose values can be varied simultaneously with a common control is an example of ganged tuning.

www.EngineeringBooksPdf.com

RELATED PROBLEMS FOR EXAMPLES

1 1.25 kΩ; 63.4°
2 4.71 kΩ
3 Current increases, reaches a maximum at resonance, and then decreases.
4 More capacitive
5 67.3 kHz
6 2.27 mA
7 Z increases; Z increases
8 No
9 200 kHz
10 −14 dB
11 7.48
12 322 Hz
13 V_{out} increases; V_{out} increases
14 Inductive
15 Increase. X_C will decrease and approach 0.
16 $R_{p(\text{eq})} = 25\ \text{k}\Omega$; $L_{\text{eq}} = 5\ \text{mH}$; $C = 0.022\ \mu\text{F}$, $R_{p(tot)} = 4.24\ \text{k}\Omega$
17 $I_L = 0.996\ \text{mA}$, $I_C = 1.06\ \text{mA}$
18 80.0 kΩ
19 The differences are negligible.
20 7.07 V
21 530 kHz
22 25
23 A larger-value load resistor has less effect on Q_O.
24 185 mV

TRUE/FALSE QUIZ

1. T **2.** F **3.** T **4.** T **5.** F **6.** T **7.** T **8.** F **9.** F **10.** F

SELF-TEST

1. (a) **2.** (c) **3.** (b) **4.** (c) **5.** (d) **6.** (c)
7. (a) **8.** (b) **9.** (d) **10.** (a) **11.** (b) **12.** (d)

PROBLEMS – ODD-NUMBERED ANSWERS

1. 520 Ω, 88.9° (V_s lagging I); 520 Ω capacitive
3. Impedance increases.
5. See Figure P–17.

▶ **FIGURE P–17**

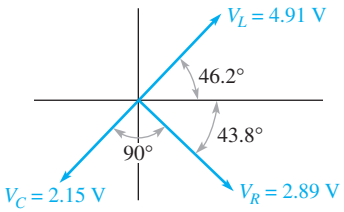

www.EngineeringBooksPdf.com

7. f_r is lower.

9. $X_L = 4.61\ \text{k}\Omega$; $X_C = 4.61\ \text{k}\Omega$; $Z = 220\ \Omega$; $I = 54.5\ \text{mA}$

11. $f_r = 454\ \text{kHz}$; $f_1 = 416\ \text{kHz}$; $f_2 = 492\ \text{kHz}$

13. **(a)** 14.5 kHz; band-pass **(b)** 24.0 kHz; band-pass

15. **(a)** $f_r = 339\ \text{kHz}$, $BW = 239\ \text{kHz}$ **(b)** $f_r = 10.4\ \text{kHz}$, $BW = 2.61\ \text{kHz}$

17. Capacitive, $X_C < X_L$.

19. $1.47\ \text{k}\Omega$

21. $53.1\ \text{M}\Omega$; 104 kHz

23. 62.5 Hz

25. 1.38 W

27. 200 Hz

29. See Figure P–18.

▶ **FIGURE P–18**

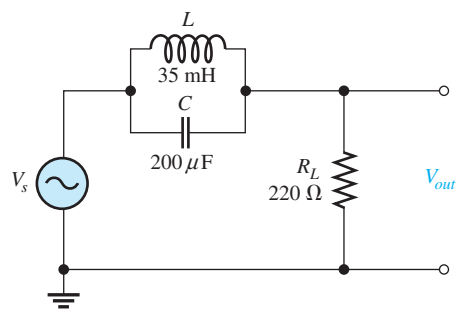

31. $I_{R1} = I_C = 2.11\ \text{mA}$; $I_{L1} = 1.33\ \text{mA}$; $I_{L2} = 667\ \mu\text{A}$;
$I_{R2} = 667\ \mu\text{A}$; $V_{R1} = 6.96\ \text{V}$; $V_C = 2.11\ \text{V}$;
$V_{L1} = V_{L2} = V_{R2} = 6.67\ \text{V}$

33. $I_{R1} = I_{L1} = 41.5\ \text{mA}$; $I_C = I_{L2} = 133\ \text{mA}$; $I_{tot} = 104\ \text{mA}$

35. $L = 989\ \mu\text{H}$; $C = 0.064\ \mu\text{F}$

37. Neglecting R_W, 8 MHz: $C = 40\ \text{pF}$; 9 MHz: $C = 31\ \text{pF}$; 10 MHz: $C = 25\ \text{pF}$;
11 MHz: $C = 21\ \text{pF}$

39. No fault

41. L is shorted.

43. L is shorted.

PHOTO CREDITS FOR REOCCURRING IMAGES

CD Icon: Stockbyte/Getty Images; **Computer Chips:** Photodisc/Thinkstock; **Computer:** Jeff Maloney/Photodisc/Getty Images; **Fiber Optic:** discpicture/Shutterstock.

www.EngineeringBooksPdf.com

Time Response of Reactive Circuits

CHAPTER OUTLINE

1 The *RC* Integrator
2 Response of *RC* Integrators to a Single Pulse
3 Response of *RC* Integrators to Repetitive Pulses
4 Response of *RC* Differentiators to a Single Pulse
5 Response of *RC* Differentiators to Repetitive Pulses
6 Response of *RL* Integrators to Pulse Inputs
7 Response of *RL* Differentiators to Pulse Inputs
8 Applications
9 Troubleshooting
Application Assignment: Putting Your Knowledge to Work

CHAPTER OBJECTIVES

- Explain the operation of an *RC* integrator
- Analyze an *RC* integrator with a single-pulse input
- Analyze an *RC* integrator with a repetitive-pulse input
- Analyze an *RC* differentiator with a single-pulse input
- Analyze an *RC* differentiator with a repetitive-pulse input
- Analyze the operation of an *RL* integrator
- Analyze the operation of an *RL* differentiator
- Discuss some applications of integrators and differentiators
- Troubleshoot *RC* integrators and *RC* differentiators

KEY TERMS

- Integrator
- Transient time
- Steady state
- Differentiator

APPLICATION ASSIGNMENT PREVIEW

For the application assignment in this chapter, you will determine the component values required to meet certain specifications in a time-delay circuit. You will also determine how to test the circuit for proper operation using a pulse generator and an oscilloscope. After studying this chapter, you should be able to complete the application assignment.

VISIT THE COMPANION WEBSITE

Study aids for this chapter are available at http://www.pearsonhighered.com/floyd/

INTRODUCTION

In this chapter, the time response of *RC* and *RL* circuits with pulse inputs is examined.

Before starting this chapter, you should review particular concepts. Understanding exponential changes in voltages and currents in capacitors and inductors is crucial to the study of the time response of reactive circuits. Exponential formulas are used throughout this chapter.

With pulse inputs, the time response of the circuits is of primary importance. In the areas of pulse and digital circuits, technicians are often concerned with how a circuit responds over an interval of time to rapid changes in voltage or current. The relationship of the circuit time constant to the input pulse characteristics, such as pulse width and period, determines the wave shapes of the voltages in the circuit.

The terms *integrator* and *differentiator* refer to circuits that can, under certain conditions, approximate the mathematical process of integration and differentiation. Mathematical integration is a summation process. Under certain conditions, integrators are capable of averaging a waveform, as you will see in this chapter. Mathematical differentiation refers to the process of finding the rate of change of a quantity. Differentiator circuits produce an output that represents the rate of change of the input.

Streeter Photography/Alamy

From Chapter 15 of *Electronics Fundamentals: Circuits, Devices, and Applications*, Eighth Edition, Thomas L. Floyd, David M. Buchla. Copyright © 2010 by Pearson Education, Inc. Published by Pearson Prentice Hall. All rights reserved.

www.EngineeringBooksPdf.com

1 THE *RC* INTEGRATOR

In terms of time response, a series *RC* circuit in which the output voltage is taken across the capacitor is known as an **integrator**. Recall that in terms of frequency response, this particular series *RC* circuit is a low-pass filter. The term, *integrator,* is derived from a mathematical function which this type of circuit approximates under certain conditions.

After completing this section, you should be able to

- **Explain the operation of an *RC* integrator**
  - Describe how the capacitor charges and discharges
  - Explain how a capacitor reacts to an instantaneous change in voltage or current
  - Describe the basic output voltage waveform

Charging and Discharging of a Capacitor

When a pulse generator is connected to the input of an *RC* integrator, as shown in Figure 1, the capacitor will charge and discharge in response to the pulses. When the input goes from its low level to its high level, the capacitor charges toward the high level of the pulse through the resistor. This charging action is analogous to connecting a battery through a switch to the *RC* circuit, as illustrated in Figure 2(a). When the pulse goes from its high level back to its low level, the capacitor discharges back through the source. Compared to the resistance of the resistor, *R*, the resistance of the source is assumed to be negligible. This discharging action is analogous to replacing the source with a closed switch, as illustrated in Figure 2(b).

▶ FIGURE 1

An *RC* integrator with a pulse generator connected.

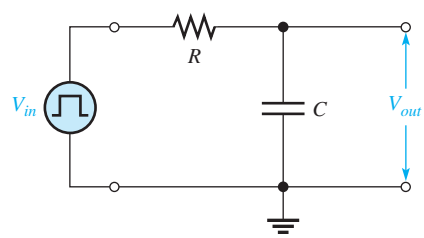

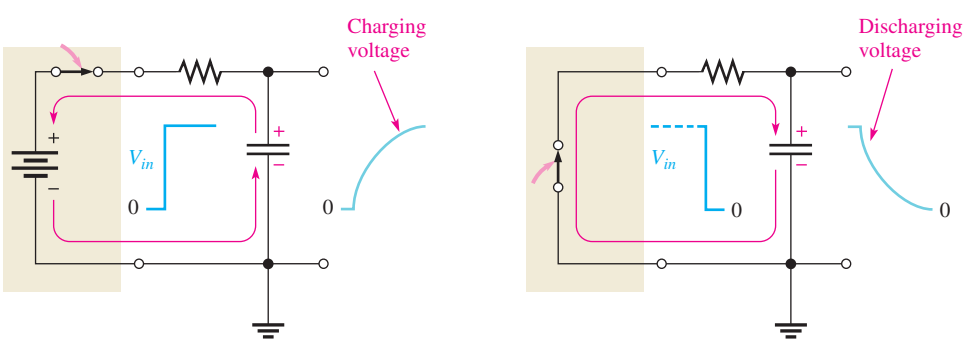

(a) When the input pulse goes HIGH, the source effectively acts as a battery in series with a closed switch, thereby charging the capacitor.

(b) When the input pulse goes back LOW, the source effectively acts as a closed switch, providing a discharge path for the capacitor.

▲ FIGURE 2

The equivalent action when a pulse source charges and discharges the capacitor.

This icon indicates selected websites for further information on topics in this section. See the Companion Website provided with this text.

www.EngineeringBooksPdf.com

A capacitor will charge and discharge following an exponential curve. Its rate of charging and discharging depends on the *RC* **time constant**, a fixed time interval determined by *R* and *C* ($\tau = RC$).

For an ideal pulse, both edges are considered to be instantaneous. Two basic rules of capacitor behavior help in understanding the response of *RC* circuits to pulse inputs.

1. The capacitor appears as a short to an instantaneous change in current and as an open to dc.
2. The voltage across the capacitor cannot change instantaneously—it can change only exponentially.

Capacitor Voltage

In an *RC* integrator, the output is the capacitor voltage. The capacitor charges during the time that the input pulse is high. If the pulse is at its high level long enough, the capacitor will fully charge to the voltage amplitude of the pulse, as illustrated in Figure 3. The capacitor discharges during the time that the pulse is low. If the low time between pulses is long enough, the capacitor will fully discharge to zero, as shown in the figure. Then when the next pulse occurs, it will charge again.

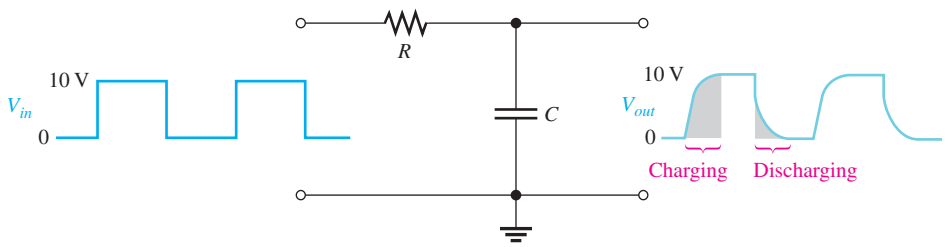

FIGURE 3

Illustration of a capacitor fully charging and discharging in response to a pulse input. A pulse generator is connected to the input, but the symbol is not shown, only the waveform.

SECTION 1 CHECKUP
Answers are at the end of the chapter.

1. Define the term *integrator* in relation to an *RC* circuit.
2. What causes a capacitor in an *RC* circuit to charge and discharge?

2 RESPONSE OF *RC* INTEGRATORS TO A SINGLE PULSE

From the previous section, you have a general idea of how an *RC* integrator responds over time to a pulse input. In this section, the time response to a single pulse is examined in detail.

After completing this section, you should be able to

- **Analyze an *RC* integrator with a single-pulse input**
  - Discuss the importance of the circuit time constant
  - Define *transient time*
  - Determine the response when the pulse width is equal to or greater than five time constants
  - Determine the response when the pulse width is less than five time constants

www.EngineeringBooksPdf.com

Two conditions of response to a single-pulse input must be considered:

1. When the input pulse width (t_W) is equal to or greater than five time constants ($t_W \geq 5\tau$)
2. When the input pulse width is less than five time constants ($t_W < 5\tau$)

Recall that five time constants is accepted as the time a capacitor needs to fully charge or fully discharge; this time is often called the **transient time**. A capacitor will fully charge if the pulse width is equal to or greater than five time constants (5τ). This condition is expressed as $t_W \geq 5\tau$. At the end of the pulse, the capacitor fully discharges back through the source.

Figure 4 illustrates the output waveforms for various *RC* transient times and a fixed input pulse width. Notice that as the transient time becomes shorter, compared to the pulse width, the shape of the output pulse approaches that of the input. In each case, the output reaches the full amplitude of the input.

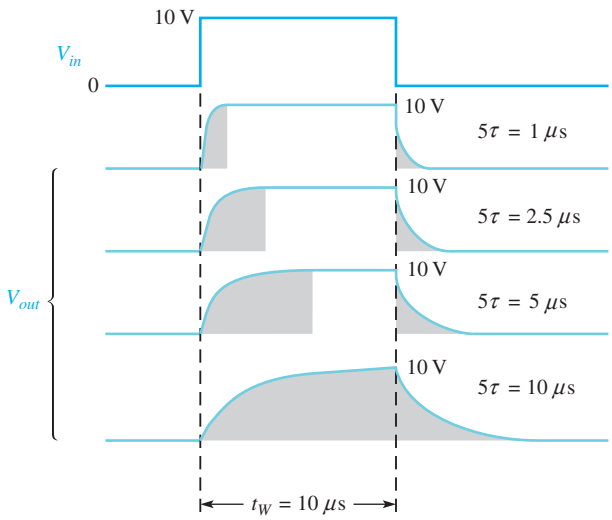

▶ **FIGURE 4**

Variation of an integrator's output pulse shape with transient time. The shaded areas indicate when the capacitor is charging and discharging.

Figure 5 shows how a fixed time constant and a variable input pulse width affect the integrator output. Notice that as the pulse width is increased, the shape of the output pulse approaches that of the input. Again, this means that the transient time is short compared to the pulse width. The rise and fall times of the output remain constant.

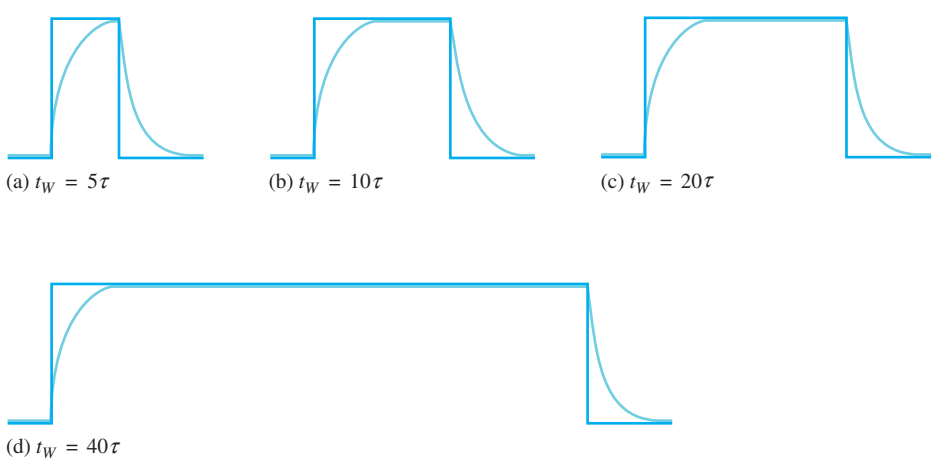

▶ **FIGURE 5**

Variation of an integrator's output pulse shape with input pulse width (the time constant is fixed). Dark blue is input and light blue is output.

www.EngineeringBooksPdf.com

Now let's examine the case in which the width of the input pulse is less than five time constants of the *RC* integrator. This condition is expressed as $t_W < 5\tau$. As you know, a capacitor charges for the duration of the pulse and the pulse width is the time it has for charging. However, because the pulse width is less than the time the capacitor needs to fully charge (5τ), the output voltage will *not* reach the full input voltage before the end of the pulse. The capacitor only partially charges, as illustrated in Figure 6 for several values of *RC* time constants. Notice that for longer time constants, the output reaches a lower voltage because the capacitor cannot charge as much during the pulse width. Of course, in the examples with a single-pulse input, the capacitor fully discharges after the pulse ends.

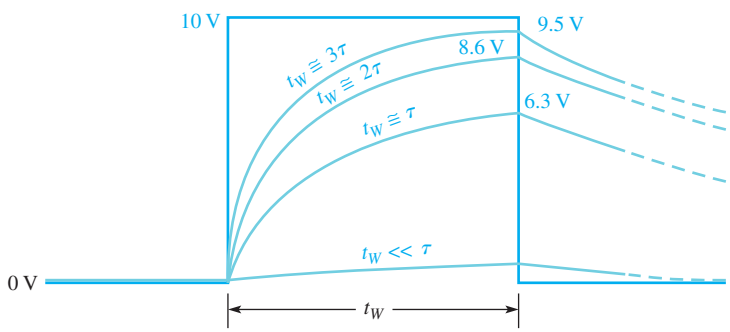

▲ **FIGURE 6**

Capacitor voltage for various time constants that are longer than the input pulse width. Dark blue is input and light blue is output.

When the time constant is much greater than the input pulse width, the capacitor charges very little, and, as a result, the output voltage becomes a very small almost constant value, as indicated in Figure 6.

Figure 7 illustrates the effect of reducing the input pulse width for a fixed time constant value. As the pulse width is reduced, the output voltage becomes smaller because the capacitor has less time to charge. However, it takes the capacitor the same length of time (5τ) to discharge back to zero for each condition after the pulse is removed.

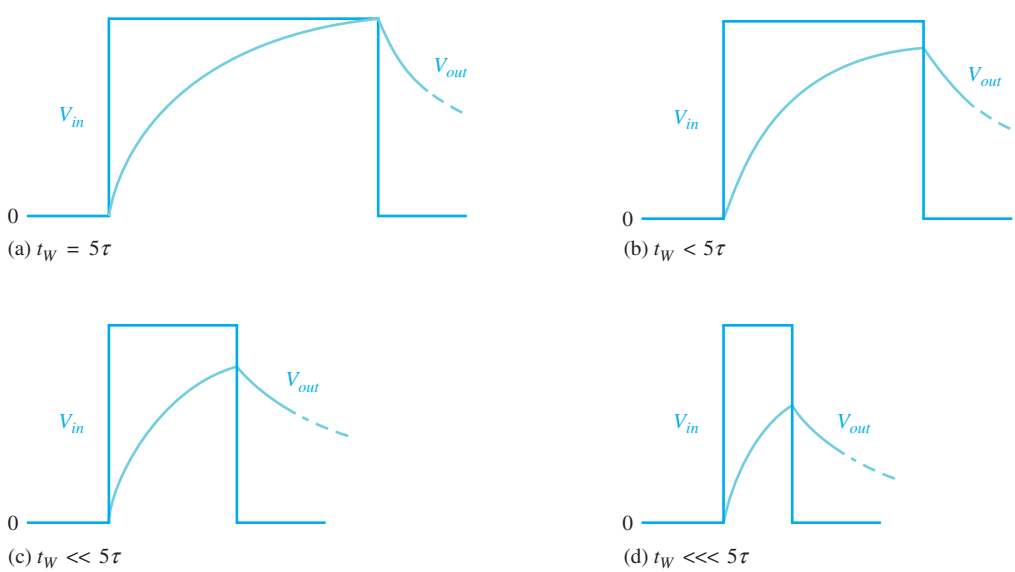

▲ **FIGURE 7**

The capacitor charges less and less as the input pulse width is reduced. The time constant is fixed.

www.EngineeringBooksPdf.com

EXAMPLE 1

A single 10 V pulse with a width of 100 μs is applied to the *RC* integrator in Figure 8. The source resistance is assumed to be zero.

(a) To what voltage will the capacitor charge?

(b) How long will it take the capacitor to discharge?

(c) Show the output voltage waveform.

▶ **FIGURE 8**

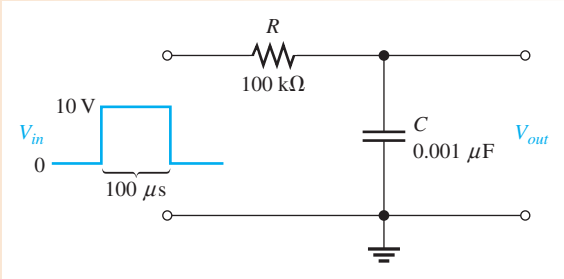

Solution

(a) The circuit time constant is

$$\tau = RC = (100\,\text{k}\Omega)(0.001\,\mu\text{F}) = 100\,\mu\text{s}$$

Notice that the pulse width is exactly equal to one time constant. Thus, the capacitor will charge approximately 63% of the full input amplitude in one time constant, so the output will reach a maximum voltage of

$$V_{out} = (0.63)10\text{ V} = \mathbf{6.3\ V}$$

(b) The capacitor discharges back through the source when the pulse ends. The total discharge time is

$$5\tau = 5(100\,\mu\text{s}) = \mathbf{500\ \mu s}$$

(c) The output charging and discharging curve is shown in Figure 9.

▶ **FIGURE 9**

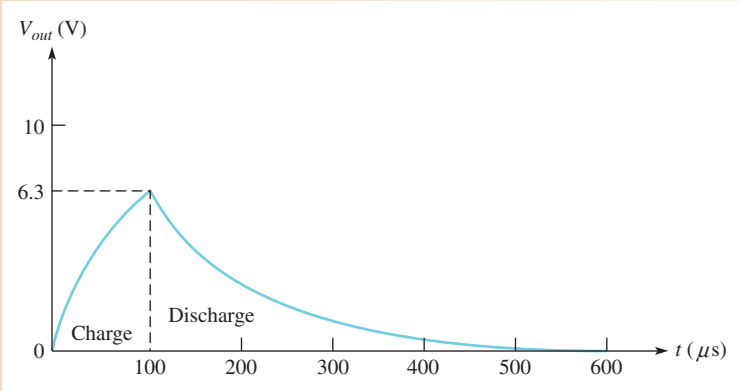

*Related Problem**

If the input pulse width in Figure 8 is increased to 200 μs, to what voltage will the capacitor charge?

Open Multisim file E15-01; files are found at www.pearsonhighered.com/floyd/. Verify the calculated results in this example and the related problem.

*Answers are at the end of the chapter.

www.EngineeringBooksPdf.com

EXAMPLE 2

Determine to what voltage the capacitor in Figure 10 will charge when a single pulse is applied to the input. Assume C is initially uncharged and the source resistance is zero.

▶ **FIGURE 10**

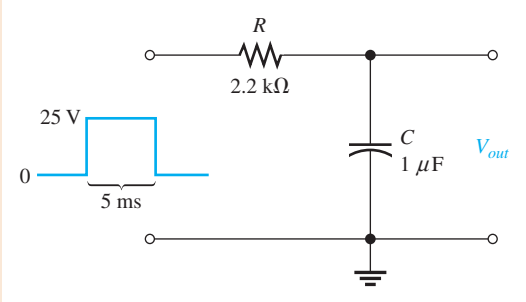

Solution Calculate the time constant.

$$\tau = RC = (2.2\ \text{k}\Omega)(1\ \mu\text{F}) = 2.2\ \text{ms}$$

Because the pulse width is 5 ms, the capacitor charges for approximately 2.27 time constants (5 ms/2.2 ms = 2.27). Use the exponential formula, to find the voltage to which the capacitor will charge. With $V_F = 25$ V and $t = 5$ ms, the calculation is as follows:

$$v = V_F(1 - e^{-t/RC}) = (25\ \text{V})(1 - e^{-5\text{ms}/2.2\text{ms}}) = \mathbf{22.4\ V}$$

These calculations show that the capacitor charges to 22.4 V during the 5 ms duration of the input pulse. It will discharge back to zero when the pulse goes back to zero.

Related Problem Determine how much C will charge if the pulse width is increased to 10 ms.

SECTION 2 CHECKUP

1. When an input pulse is applied to an RC integrator, what condition must exist in order for the output voltage to reach the full amplitude of the input?
2. For the circuit in Figure 11, which has a single-pulse input, find the maximum output voltage and determine how long the capacitor will discharge.
3. For Figure 11, draw the approximate shape of the output voltage with respect to the input pulse.

▶ **FIGURE 11**

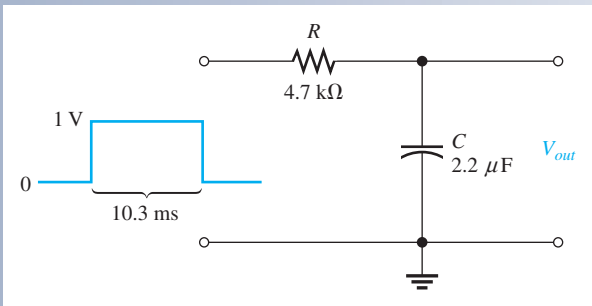

4. If an integrator time constant equals the input pulse width, will the capacitor fully charge?
5. Describe the condition in an integrator under which the output voltage has the approximate shape of a rectangular input pulse.

www.EngineeringBooksPdf.com

3 RESPONSE OF *RC* INTEGRATORS TO REPETITIVE PULSES

In electronic systems, you will encounter waveforms with repetitive pulses much more often than with single pulses. However, an understanding of the integrator's response to single pulses is necessary in order to understand how these circuits respond to repeated pulses.

After completing this section, you should be able to

- **Analyze an *RC* integrator with a repetitive-pulse input**
  - Determine the response when the capacitor does not fully charge or discharge
  - Define *steady state*
  - Describe the effect of a change in time constant on circuit response

If a periodic pulse waveform is applied to an *RC* integrator, as shown in Figure 12, the output waveshape depends on the relationship of the circuit time constant and the frequency of the input pulses. The capacitor, of course, charges and discharges in response to a pulse input. The amount of charge and discharge of the capacitor depends both on the circuit time constant and on the input frequency, as mentioned.

If the pulse width and the time between pulses are each equal to or greater than five time constants, the capacitor will fully charge and fully discharge during each period of the input waveform. This case is shown in Figure 12.

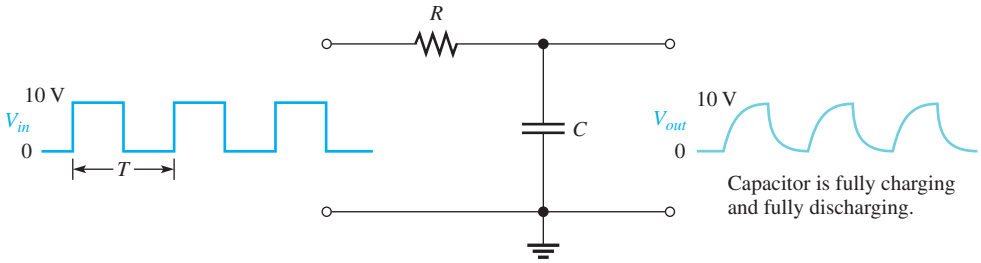

▲ **FIGURE 12**

RC integrator with a repetitive-pulse waveform input.

When the pulse width and the time between pulses are shorter than 5 time constants, as illustrated in Figure 13 for a square wave, the capacitor will *not* completely charge or discharge. We will now examine the effects of this situation on the output voltage of the *RC* integrator.

▶ **FIGURE 13**

Input waveform that does not allow full charge or discharge of the integrator capacitor.

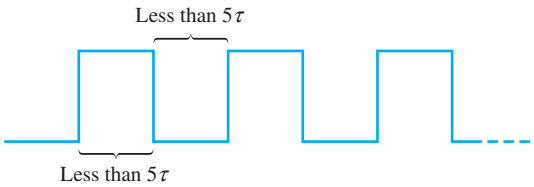

For illustration, let's use an *RC* integrator with a charging and discharging time constant equal to the pulse width of a 10 V square wave input, as in Figure 14. This choice will simplify the analysis and will demonstrate the basic action of the integrator under these conditions. At this point, you really do not care what the exact time constant value is because an *RC* circuit charges 63.2% during one time constant interval.

www.EngineeringBooksPdf.com

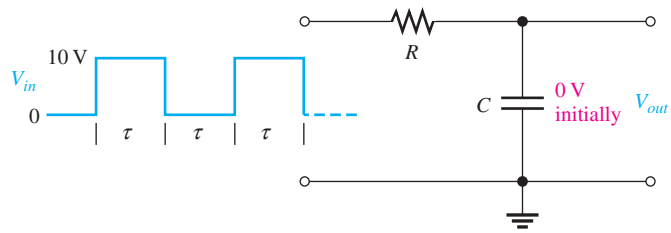

FIGURE 14

Integrator with a square wave input having a period equal to two time constants ($T = 2\tau$).

Let's assume that the capacitor in Figure 14 begins initially uncharged and examine the output voltage on a pulse-by-pulse basis. The results of this analysis are shown in Figure 15.

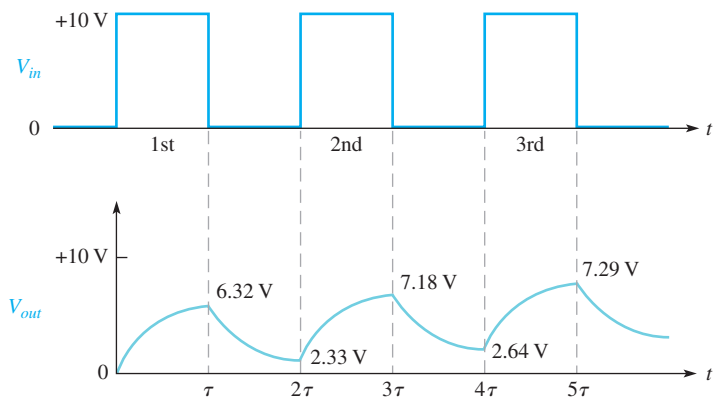

FIGURE 15

Input and output for the initially uncharged integrator in Figure 14.

First pulse During the first pulse, the capacitor charges. The output voltage reaches 6.32 V, which is 63.2% of 10 V, as shown in Figure 15.

Between first and second pulses The capacitor discharges, and the voltage decreases to 36.8% of the voltage at the beginning of this interval: 0.368(6.32 V) = 2.33 V.

Second pulse The capacitor voltage begins at 2.33 V and increases 63.2% of the way to 10 V. The total charging range is 10 V − 2.33 V = 7.67 V. The capacitor voltage will increase an additional 63.2% of 7.67 V, which is 4.85 V. Thus, at the end of the second pulse, the output voltage is 2.33 V + 4.85 V = 7.18 V, as indicated in Figure 15. Notice that the average is building up.

Between second and third pulses The capacitor discharges during this time, and therefore the voltage decreases to 36.8% of the initial voltage by the end of the second pulse: 0.368(7.18 V) = 2.64 V.

Third pulse At the start of the third pulse, the capacitor voltage is 2.64 V. The capacitor charges 63.2% of the way from 2.64 V to 10 V: 0.632(10 V − 2.64 V) = 4.65 V. Therefore, the voltage at the end of the third pulse is 2.64 V + 4.65 V = 7.29 V.

Steady-State Time Response

In the preceding discussion, the output voltage gradually built up and then began leveling off. It takes approximately 5τ for the output voltage to build up to 99% of its final value, regardless of the number of pulses that may occur during that time interval. This interval is the transient time of the circuit. Once the output voltage reaches the average value of the input voltage, a **steady-state** condition is reached, which continues as long as the periodic input continues. This condition is illustrated in Figure 16 based on the approximate values obtained after the first three pulses.

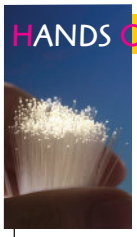

HANDS ON TIP

When you view pulse waveforms on an oscilloscope, set the scope to be DC coupled, not AC coupled. The reason is that AC coupling places a capacitor in series and can cause distortion in low-frequency pulse signals. Also, DC coupling allows you to observe the dc level of the pulse.

www.EngineeringBooksPdf.com

▶ **FIGURE 16**

Output reaches steady state after 5τ and stabilizes at the values indicated.

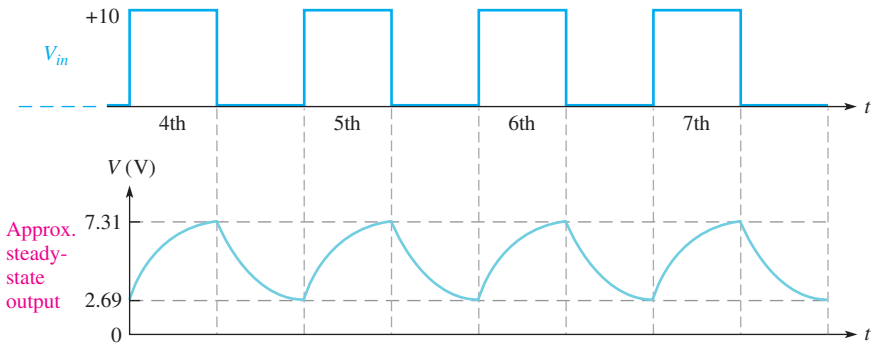

The transient time for our example circuit is the time from the beginning of the first pulse to the end of the third pulse. The capacitor voltage at the end of the third pulse is 7.29 V, which is about 99% of its final value.

The Effect of an Increase in Time Constant

What happens to the output voltage if the *RC* time constant of the integrator is increased with a variable resistor, as indicated in Figure 17? As the time constant is increased, the capacitor charges less during a pulse and discharges less between pulses. The result is a smaller fluctuation in the output voltage for increasing values of time constant, as shown in Figure 18.

As the time constant becomes extremely long compared to the pulse width, the output voltage approaches a constant dc voltage, as shown in Figure 18(c). This value is the average value of the input. For a square wave, it is one-half the amplitude.

▶ **FIGURE 17**

Integrator with a variable time constant.

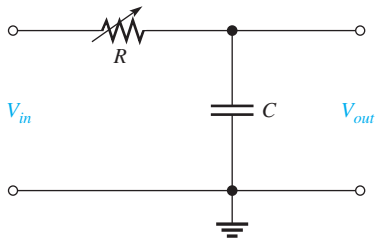

▶ **FIGURE 18**

Effect of increasing time constants on the output of an integrator ($\tau_3 > \tau_2 > \tau_1$).

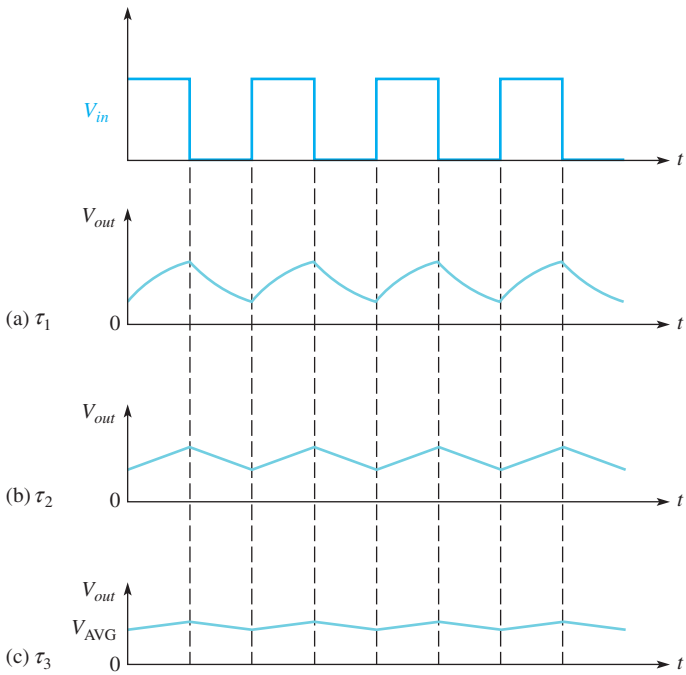

www.EngineeringBooksPdf.com

EXAMPLE 3

Determine the output voltage waveform for the first two pulses applied to the integrator circuit in Figure 19. Assume that the capacitor is initially uncharged.

▶ **FIGURE 19**

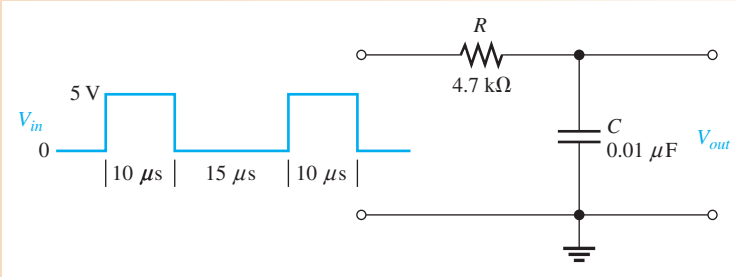

Solution First, calculate the circuit time constant.

$$\tau = RC = (4.7\ \text{k}\Omega)(0.01\ \mu\text{F}) = 47\ \mu\text{s}$$

Obviously, the time constant is much longer than the input pulse width or the interval between pulses (notice that the input is not a square wave). Thus, in this case, the exponential formulas must be applied, and the analysis is relatively difficult. Follow the solution carefully.

1. *Calculation for first pulse:* Use the equation for an increasing exponential because C is charging. Note that V_F is 5 V, and t equals the pulse width of 10 μs. Therefore,

$$v_C = V_F(1 - e^{-t/RC}) = (5\ \text{V})(1 - e^{-10\mu\text{s}/47\mu\text{s}}) = 958\ \text{mV}$$

This result is plotted in Figure 20(a).

▶ **FIGURE 20**

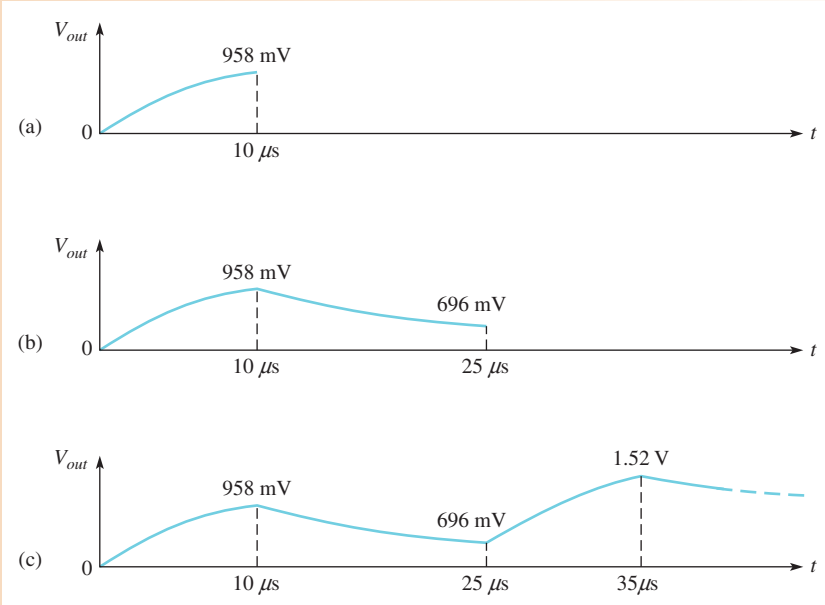

2. *Calculation for interval between first and second pulse:* Use the equation for a decreasing exponential because C is discharging. Note that V_i is 958 mV because C begins to discharge from this value at the end of the first pulse. The discharge time is 15 μs. Therefore,

$$v_C = V_i e^{-t/RC} = (958\ \text{mV})e^{-15\mu\text{s}/47\mu\text{s}} = 696\ \text{mV}$$

This result is shown in Figure 20(b).

www.EngineeringBooksPdf.com

3. *Calculation for second pulse:* At the beginning of the second pulse, the output voltage is 696 mV. During the second pulse, the capacitor will again charge. In this case it does not begin at zero volts. It already has 696 mV from the previous charge and discharge. To handle this situation, you must use the general exponential formula.

$$v = V_F + (V_i - V_F)e^{-t/\tau}$$

Using this equation, you can calculate the voltage across the capacitor at the end of the second pulse.

$$v_C = V_F + (V_i - V_F)e^{-t/RC} = 5\text{ V} + (696\text{ mV} - 5\text{ V})e^{-10\mu s/47\mu s} = 1.52\text{ V}$$

This result is shown in Figure 20(c).

Notice that the output waveform builds up on successive input pulses. After approximately 5τ, it will reach its steady state and will fluctuate between a constant maximum and a constant minimum, with an average equal to the average value of the input. You can demonstrate this pattern by carrying the analysis in this example further.

Related Problem Determine V_{out} at the beginning of the third pulse.

Open Multisim file E15-03. Measure the steady-state output waveform in terms of its minimum, maximum, and average values.

SECTION 3 CHECKUP

1. What conditions allow an *RC* integrator capacitor to fully charge and discharge when a periodic pulse waveform is applied to the input?
2. What will the output waveform look like if the circuit time constant is extremely small compared to the pulse width of a square wave input?
3. What is the time called that is required for the output voltage to build up to a constant average value when 5τ is greater than the pulse width of an input square wave?
4. Define *steady-state response.*
5. Describe the output of an *RC* integrator when the input is a square wave that has a period that is much less than 1τ.

4 RESPONSE OF *RC* DIFFERENTIATORS TO A SINGLE PULSE

In terms of time response, a series *RC* circuit in which the output voltage is taken across the resistor is known as a **differentiator**. Recall that in terms of frequency response, this particular series *RC* circuit is a high-pass filter. The term, *differentiator,* is derived from a mathematical function which this type of circuit approximates under certain conditions.

After completing this section, you should be able to

- **Analyze an *RC* differentiator with a single-pulse input**
  - Describe the response at the rising edge of the input pulse
  - Determine the response during and at the end of a pulse for various pulse width–time constant relationships

www.EngineeringBooksPdf.com

Figure 21 shows an *RC* differentiator with a pulse input. The same action occurs in the differentiator as in the integrator, except the output voltage is taken across the resistor rather than the capacitor. The capacitor charges exponentially at a rate depending on the *RC* time constant. The shape of the differentiator's resistor voltage is determined by the charging and discharging action of the capacitor.

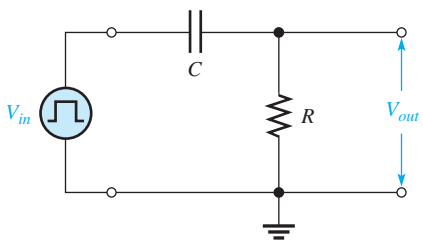

◀ **FIGURE 21**

An *RC* differentiator with a pulse generator connected.

Pulse Response

To understand how the output voltage is shaped by a differentiator, you must consider the following:

1. The response to the rising pulse edge
2. The response between the rising and falling edges
3. The response to the falling pulse edge

Let's assume that the capacitor is initially uncharged prior to the rising pulse edge. Prior to the pulse, the input is zero volts. Thus, there are zero volts across the capacitor and also zero volts across the resistor, as indicated in Figure 22(a).

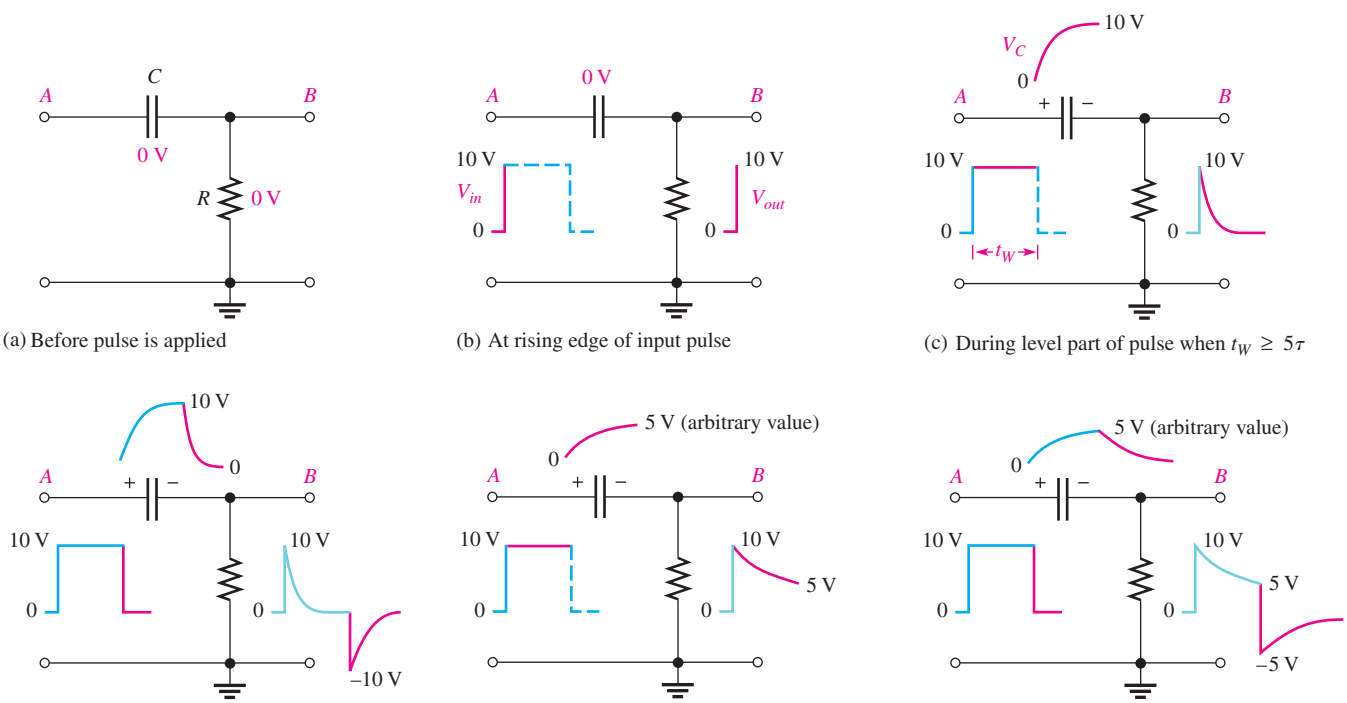

(a) Before pulse is applied

(b) At rising edge of input pulse

(c) During level part of pulse when $t_W \geq 5\tau$

(d) At falling edge of pulse when $t_W \geq 5\tau$

(e) During level part of pulse when $t_W < 5\tau$

(f) At falling edge of pulse when $t_W < 5\tau$

▲ **FIGURE 22**

Examples of the response of a differentiator to a single-pulse input under two conditions: $t_W \geq 5\tau$ and $t_W < 5\tau$. A pulse generator is connected to the input, but the symbol is not shown, only the pulses.

www.EngineeringBooksPdf.com

Response to the Rising Edge of the Input Pulse Let's also assume that a 10 V pulse is applied to the input. When the rising edge occurs, the voltage at point *A* goes to +10 V. Recall that the voltage across a capacitor cannot change instantaneously, and thus the capacitor appears instantaneously as a short. Therefore, if the voltage at point *A* goes instantly to +10 V, then the voltage at point *B* *must* also go instantly to +10 V, keeping the capacitor voltage zero for the instant of the rising edge. The capacitor voltage is the voltage from point *A* to point *B*.

The voltage at point *B* with respect to ground is the voltage across the resistor (and the output voltage). Thus, the output voltage suddenly goes to +10 V in response to the rising pulse edge, as indicated in Figure 22(b).

Response During Pulse When $t_W \geq 5\tau$ While the pulse is at its high level between the rising edge and the falling edge, the capacitor is charging. When the pulse width is equal to or greater than five time constants ($t_W \geq 5\tau$), the capacitor has time to fully charge.

As the voltage across the capacitor builds up exponentially, the voltage across the resistor decreases exponentially until it reaches zero volts at the time the capacitor reaches full charge (+10 V in this case). This decrease in the resistor voltage occurs because the sum of the capacitor voltage and the resistor voltage at any instant must be equal to the source voltage, in compliance with Kirchhoff's voltage law ($v_C + v_R = v_{in}$). This part of the response is illustrated in Figure 22(c).

Response to Falling Edge When $t_W \geq 5\tau$ Let's examine the case in which the capacitor is fully charged at the end of the pulse ($t_W \geq 5\tau$). Refer to Figure 22(d). On the falling edge, the input pulse suddenly goes from +10 V back to zero. An instant before the falling edge, the capacitor is charged to 10 V, so the voltage at point *A* is +10 V and the voltage at point *B* is 0 V. The voltage across a capacitor cannot change instantaneously, so when the voltage at point *A* makes a transition from +10 V to zero on the falling edge, the voltage at point *B* *must* also make a 10 V transition from zero to −10 V. This keeps the voltage across the capacitor at 10 V for the instant of the falling edge.

The capacitor now begins to discharge exponentially. As a result, the resistor voltage goes from −10 V to zero in an exponential curve, as indicated in Figure 22(d).

Response During Pulse When $t_W < 5\tau$ When the pulse width is less than five time constants ($t_W < 5\tau$), the capacitor does not have time to fully charge. Its partial charge depends on the relation of the time constant and the pulse width.

Because the capacitor does not reach the full +10 V, the resistor voltage will not reach zero volts by the end of the pulse. For example, if the capacitor charges to +5 V during the pulse interval, the resistor voltage will decrease to +5 V, as illustrated in Figure 22(e).

Response to Falling Edge When $t_W < 5\tau$ Now, let's examine the case in which the capacitor is only partially charged at the end of the pulse ($t_W < 5\tau$). For example, if the capacitor charges to +5 V, the resistor voltage at the instant before the falling edge is also +5 V because the capacitor voltage plus the resistor voltage must add up to +10 V, as illustrated in Figure 22(e).

When the falling edge occurs, the voltage at point *A* goes from +10 V to zero. As a result, the voltage at point *B* goes from +5 V to −5 V, as illustrated in Figure 22(f). This decrease occurs, of course, because the capacitor voltage cannot change at the instant of the falling edge. Immediately after the falling edge, the capacitor begins to discharge to zero. As a result, the resistor voltage goes from −5 V to zero, as shown.

Summary of *RC* Differentiator Response to a Single Pulse

A good way to summarize this section is to look at the general output waveforms of a differentiator as the time constant is varied from one extreme, when 5τ is much less than the pulse width, to the other extreme, when 5τ is much greater than the pulse width. These situations are illustrated in Figure 23. In part (a), the output consists of narrow positive and negative "spikes." In part (e), the output approaches the shape of the input. Various conditions between these extremes are illustrated in parts (b), (c), and (d).

www.EngineeringBooksPdf.com

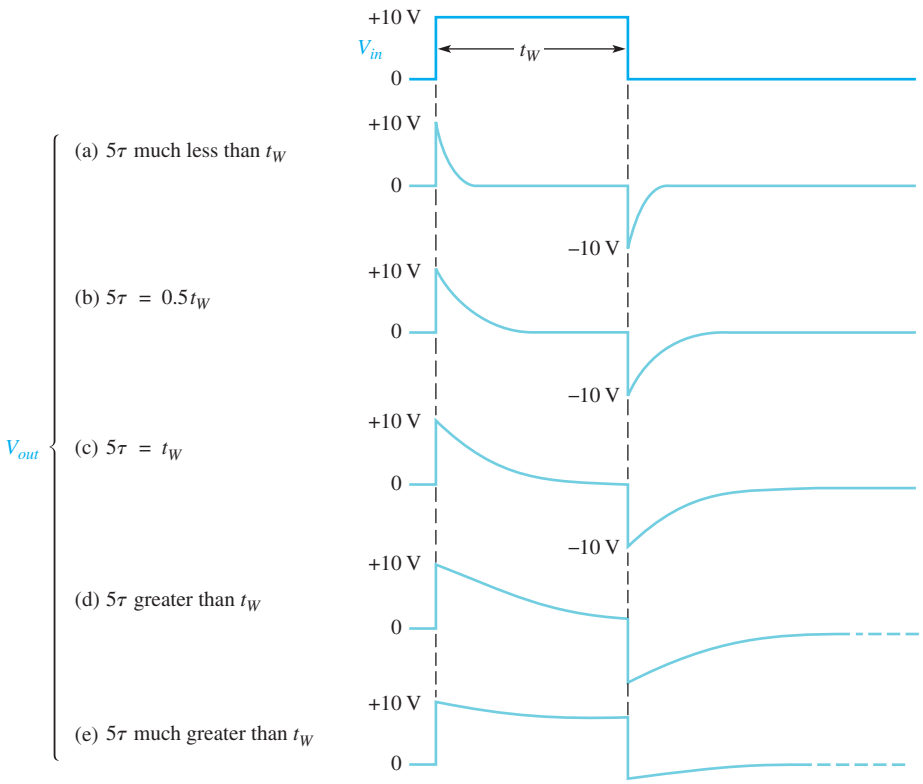

▲ **FIGURE 23**

Effects of a change in time constant on the shape of the output voltage of an *RC* differentiator.

EXAMPLE 4

Show the output voltage for the circuit in Figure 24.

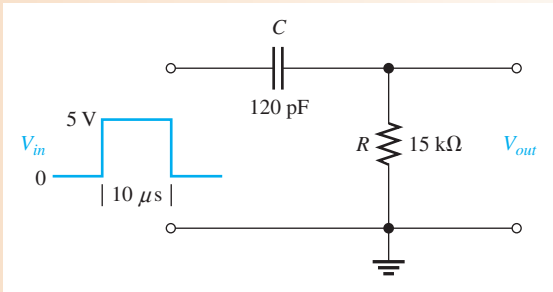

▲ **FIGURE 24**

Solution First , calculate the time constant.

$$\tau = RC = (15\,\text{k}\Omega)(120\,\text{pF}) = 1.8\,\mu\text{s}$$

In this case, $t_W > 5\tau$, so the capacitor reaches full charge in 9 μs (before the end of the pulse).

On the rising edge, the resistor voltage jumps to +5 V and then decreases exponentially to zero before the end of the pulse. On the falling edge, the resistor voltage jumps to −5 V and then goes back to zero exponentially. The resistor voltage is, of course, the output, and its shape is shown in Figure 25.

www.EngineeringBooksPdf.com

▶ FIGURE 25

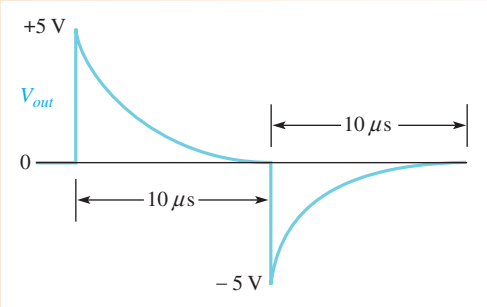

Related Problem Show the output voltage if $R = 18\ \text{k}\Omega$ and $C = 47$ pF in Figure 24.

EXAMPLE 5

Determine the output voltage waveform for the differentiator in Figure 26.

▶ FIGURE 26

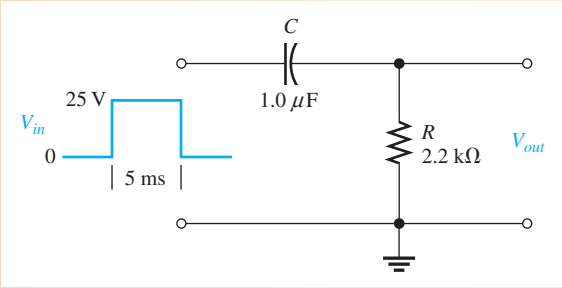

Solution First, calculate the time constant.

$$\tau = (2.2\ \text{k}\Omega)(1.0\ \mu\text{F}) = 2.2\ \text{ms}$$

On the rising edge, the resistor voltage immediately jumps to +25 V. Because the pulse width is 5 ms, the capacitor charges for approximately 2.27 time constants during the pulse, and therefore does not reach full charge. Thus, you must use the formula for a decreasing exponential in order to calculate to what voltage the output decreases by the end of the pulse.

$$v_{out} = V_i e^{-t/RC} = (25\ \text{V})e^{-5\text{ms}/2.2\text{ms}} = 2.58\ \text{V}$$

where $V_i = 25$ V and $t = 5$ ms. This calculation gives the resistor voltage at the end of the 5 ms pulse width interval.

On the falling edge, the resistor voltage immediately jumps from +2.58 V down to −22.4 V (a 25 V transition). The resulting waveform of the output voltage is shown in Figure 27.

▶ FIGURE 27

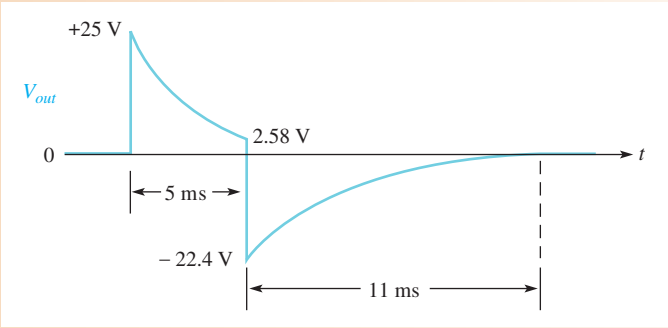

Related Problem Determine the voltage at the end of the pulse in Figure 26 if R is 1.5 kΩ.

www.EngineeringBooksPdf.com

SECTION 4 CHECKUP

1. Show the output of a differentiator for a 10 V input pulse when $5\tau = 0.5t_W$.
2. Under what condition does the output pulse shape most closely resemble the input pulse for a differentiator?
3. What does the differentiator output look like when 5τ is much less than the pulse width of the input?
4. If the resistor voltage in a differentiating circuit is down to +5 V at the end of a 15 V input pulse, to what negative value will the resistor voltage go in response to the falling edge of the input?

5 RESPONSE OF *RC* DIFFERENTIATORS TO REPETITIVE PULSES

The *RC* differentiator response to a single pulse, covered in the last section, is extended in this section to repetitive pulses.

After completing this section, you should be able to

- **Analyze an *RC* differentiator with a repetitive-pulse input**
  - Determine the response when the pulse width is less than five time constants

If a periodic pulse waveform is applied to an *RC* differentiating circuit, two conditions again are possible: $t_W \geq 5\tau$ or $t_W < 5\tau$. Figure 28 shows the output when $t_W = 5\tau$. As the time constant is reduced, both the positive and the negative portions of the output become narrower. Notice that the average value of the output is zero; the waveform has equal positive and negative portions. The average value of a waveform is its **dc component**. Because a capacitor blocks dc, the dc component of the input is prevented from passing through to the output.

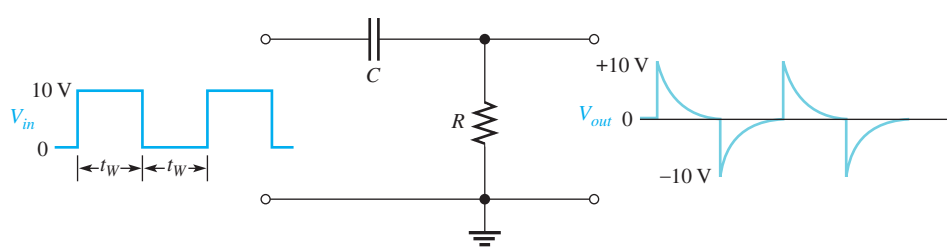

FIGURE 28

Example of differentiator response when $t_W = 5\tau$.

Figure 29 shows the steady-state output when $t_W < 5\tau$. As the time constant is increased, the positively and negatively sloping portions become flatter. For a very long time constant, the output approaches the shape of the input, but with an average value of zero.

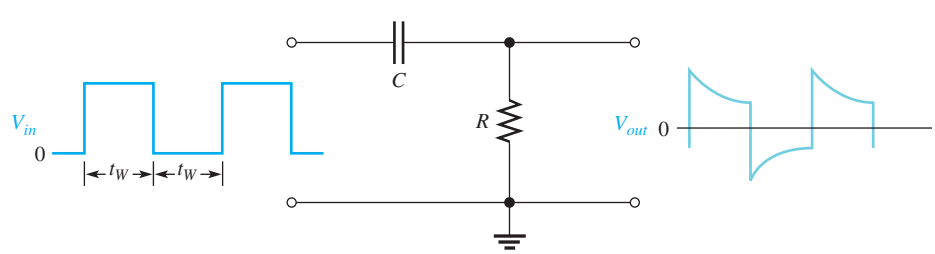

FIGURE 29

Example of differentiator response when $t_W < 5\tau$.

www.EngineeringBooksPdf.com

Analysis of a Repetitive Waveform

Like the integrator, the differentiator output takes time (5τ) to reach steady state. To illustrate the response, let's take an example in which the time constant equals the input pulse width. At this point, we do not care what the value of the circuit time constant is because we know that the resistor voltage will decrease to 36.8% of its maximum value during one pulse (1τ). Let's assume that the capacitor in Figure 30 begins initially uncharged and examine the output voltage on a pulse-by-pulse basis. The results of this analysis are shown in Figure 31.

▶ **FIGURE 30**

RC differentiator with $T = 2\tau$.

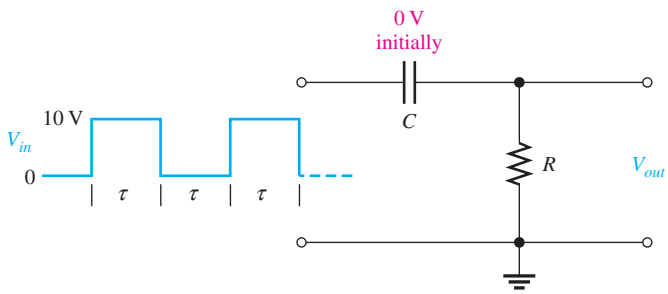

▶ **FIGURE 31**

Differentiator output waveform during transient time for the circuit in Figure 30.

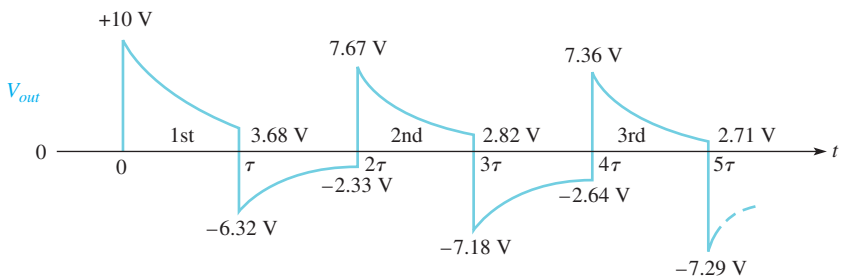

First pulse On the rising edge, the output instantaneously jumps to +10 V. Then the capacitor partially charges to 63.2% of 10 V, which is 6.32 V. Thus, the output voltage must decrease to 3.68 V, as shown in Figure 31.

On the falling edge, the output instantaneously makes a negative-going 10 V transition to −6.32 V because 3.68 V − 10 V = −6.32 V.

Between first and second pulses The capacitor discharges to 36.8% of 6.32 V, which is 2.33 V. Thus, the resistor voltage, which starts at −6.32 V, must increase to −2.33 V. Why? Because at the instant prior to the next pulse, the input voltage is zero. Therefore, the sum of v_C and v_R must be zero (+2.33 V − 2.33 V = 0). Remember that $v_C + v_R = v_{in}$ at all times, in accordance with Kirchhoff's voltage law.

Second pulse On the rising edge, the output makes an instantaneous, positive-going, 10 V transition from −2.33 V to 7.67 V. Then by the end of the pulse the capacitor charges 0.632 (10 V − 2.33 V) = 4.85 V. Thus, the capacitor voltage increases from 2.33 V to 2.33 V + 4.85 V = 7.18 V. The output voltage drops to 0.368(7.67 V) = 2.82 V.

On the falling edge, the output instantaneously makes a negative-going transition from 2.82 V to −7.18 V, as shown in Figure 31.

Between second and third pulses The capacitor discharges to 36.8% of 7.18 V, which is 2.64 V. Thus, the output voltage starts at −7.18 V and increases to −2.64 V because the capacitor voltage and the resistor voltage must add up to zero at the instant prior to the third pulse (the input is zero).

Third pulse On the rising edge, the output makes an instantaneous 10 V transition from −2.64 V to +7.36 V. Then the capacitor charges 0.632(10 V − 2.64 V) = 4.65 V to 2.64 V + 4.65 V = +7.29 V. As a result, the output voltage drops to 0.368(7.36 V) = 2.71 V. On the falling edge, the output instantly goes from +2.71 V down to −7.29 V.

www.EngineeringBooksPdf.com

After the third pulse, five time constants have elapsed, and the output voltage is close to its steady state. Thus, the waveform in Figure 31 will continue to vary from a positive maximum of about +7.3 V to a negative maximum of about −7.3 V, with an average value of zero.

SECTION 5 CHECKUP

1. What conditions allow an *RC* differentiator to fully charge and discharge when a periodic pulse waveform is applied to the input?
2. What will the output waveform look like if the circuit time constant is extremely small compared to the pulse width of a square wave input?
3. What does the average value of the differentiator output voltage equal during steady state?

6 RESPONSE OF *RL* INTEGRATORS TO PULSE INPUTS

A series *RL* circuit in which the output voltage is taken across the resistor is known as an integrator in terms of time response. The response to a single pulse is discussed but can be extended to repetitive pulses as was done for the case of *RC* integrators. Although the *RL* integrator has waveforms similar to the *RC* integrator, the *RL* integrator is not as commonly used; inductors tend to be more expensive than capacitors and have winding resistance that can adversely affect the circuit.

After completing this section, you should be able to

- **Analyze the operation of an *RL* integrator**
  - Determine the response to a single-pulse input

Figure 32 shows an *RL* integrator. The output waveform is taken across the resistor and, under equivalent conditions, is the same shape as that for the *RC* integrator. Recall that in the *RC* case, the output was across the capacitor.

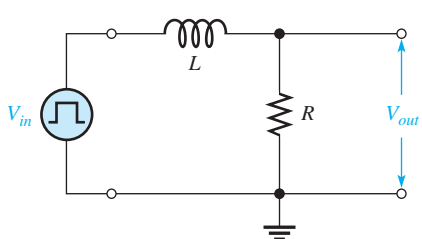

FIGURE 32

An *RL* integrator with a pulse generator connected.

As you know, each edge of an ideal pulse is considered to occur instantaneously. Two basic rules for inductor behavior will aid in analyzing *RL* circuit responses to pulse inputs:

1. The inductor appears as an open to an instantaneous change in current and as a short (ideally) to dc.
2. The current in an inductor cannot change instantaneously—it can change only exponentially.

Response of the *RL* Integrator to a Single Pulse

When a pulse generator is connected to the input of an *RL* integrator and the voltage pulse goes from its low level to its high level, the inductor prevents a sudden change in current. As a result, the inductor acts as an open, and all the input voltage is across it at the instant of the rising pulse edge. This situation is indicated in Figure 33(a).

After the rising edge, the current builds up, and the output voltage follows the current as it increases exponentially, as shown in Figure 33(b). The current can reach a maximum

www.EngineeringBooksPdf.com

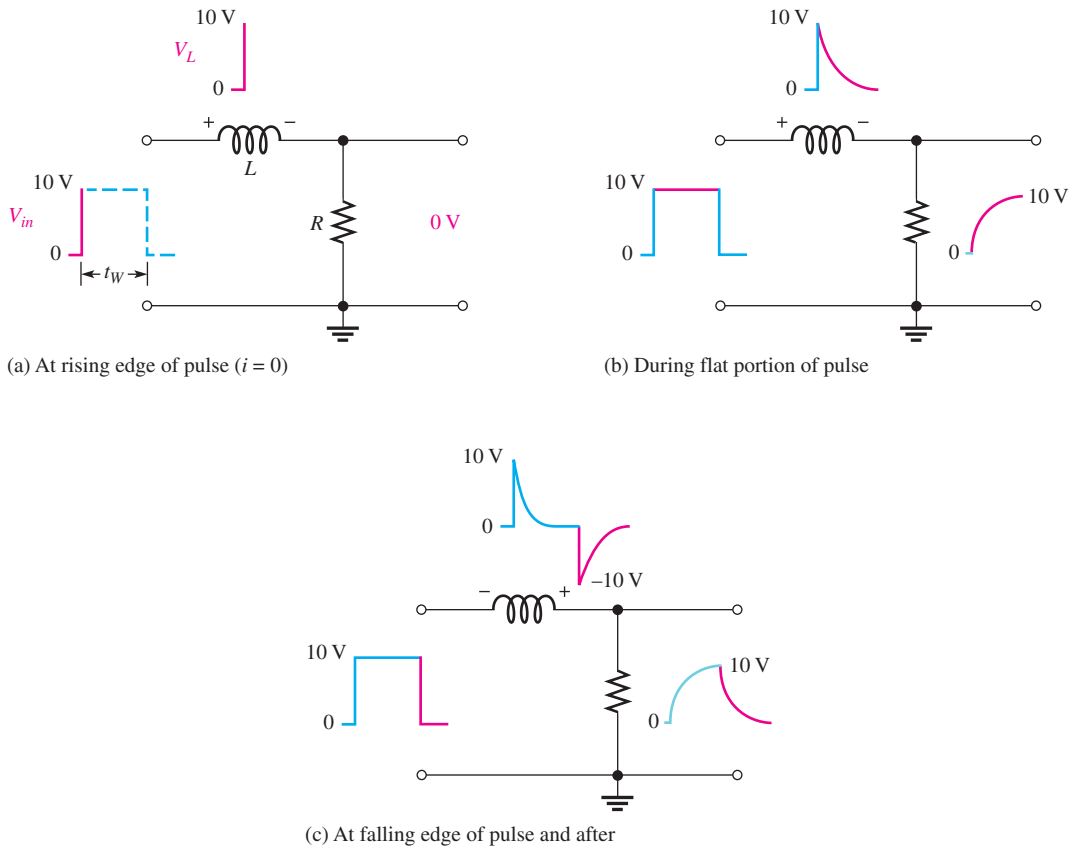

(a) At rising edge of pulse ($i = 0$)

(b) During flat portion of pulse

(c) At falling edge of pulse and after

▲ FIGURE 33

Illustration of the pulse response of an *RL* integrator ($t_W > 5\tau$). A pulse generator is connected to the input but its symbol is not shown, only the pulses.

of V_p/R if the transient time is shorter than the pulse width ($V_p = 10$ V in this example where V_p is pulse amplitude).

When the pulse goes from its high level to its low level, an induced voltage with reversed polarity is created across the coil in an effort to keep the current equal to V_p/R. The output voltage begins to decrease exponentially, as shown in Figure 33(c).

The exact shape of the output depends on the L/R time constant as summarized in Figure 34 for various relationships between the time constant and the pulse width. You should note that the response of this *RL* circuit in terms of the shape of the output is identical to that of

▶ FIGURE 34

Illustration of the variation in integrator output pulse shape with time constant.

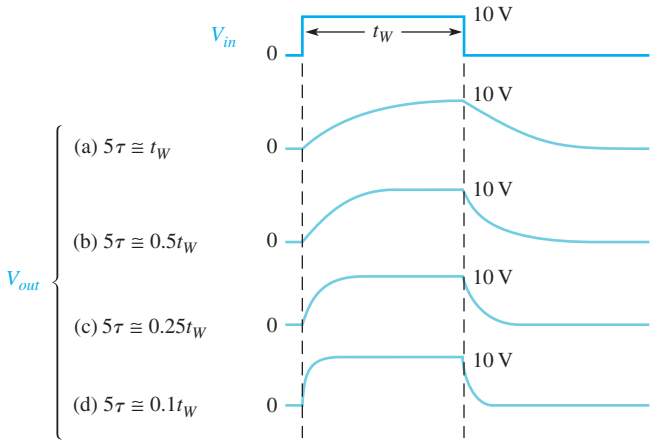

www.EngineeringBooksPdf.com

the *RC* integrator. The relationship of the *L*/*R* time constant to the input pulse width has the same effect as the *RC* time constant that we discussed earlier in this chapter. For example, when $t_W < 5\tau$, the output voltage will not reach its maximum possible value.

EXAMPLE 6

Determine the maximum output voltage for the integrator in Figure 35 when a single pulse is applied as shown.

▶ **FIGURE 35**

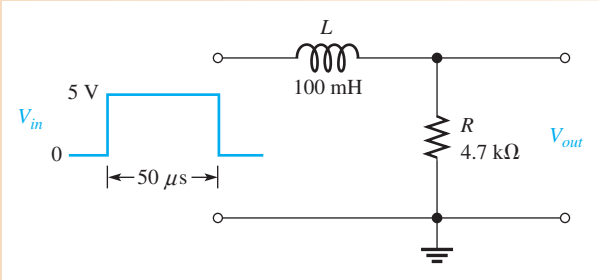

Solution Calculate the time constant.

$$\tau = \frac{L}{R} = \frac{100\text{ mH}}{4.7\text{ k}\Omega} = 21.3\ \mu\text{s}$$

Because the pulse width is 50 μs, the inductor's magnetic field increases (energizes) for approximately 2.35τ; ($50\ \mu\text{s}/21.3\ \mu\text{s} = 2.35$). Use the following exponential equation to calculate the voltage.

$$v = V_F + (V_i - V_F)e^{-Rt/L}$$

V_i is zero. The maximum output voltage occurs at the end of the pulse. Therefore,

$$v_L = V_F(1 - e^{-t/\tau}) = 5\text{ V}(1 - e^{-50\ \mu\text{s}/21.3\ \mu\text{s}}) = \mathbf{4.52\ V}$$

Related Problem What value must *R* be for the output voltage to reach 5 V by the end of the pulse?

Open the file E15-06. Use the space bar to trigger the pulse generator. Confirm the calculations shown in the solution.

EXAMPLE 7

A pulse is applied to the *RL* integrator in Figure 36. Determine the waveforms and the values for I, V_R, and V_L.

▶ **FIGURE 36**

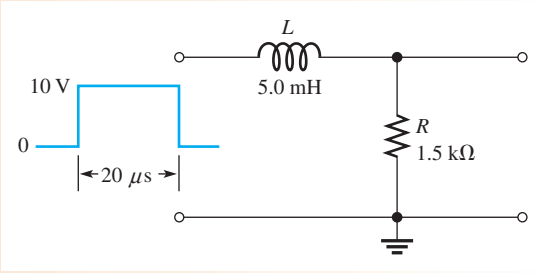

Solution The circuit time constant is

$$\tau = \frac{L}{R} = \frac{5.0\text{ mH}}{1.5\text{ k}\Omega} = 3.33\ \mu\text{s}$$

www.EngineeringBooksPdf.com

Since $5\tau = 16.7\ \mu s$ is less than t_W, the current will reach its maximum value and remain there until the end of the pulse.

At the rising edge of the pulse,

$$i = 0\ \text{A}$$
$$v_R = 0\ \text{V}$$
$$v_L = 10\ \text{V}$$

The inductor appears as an open, so all of the input voltage appears across L.

During the pulse,

$$i \text{ increases exponentially to } \frac{V_p}{R} = \frac{10\ \text{V}}{1.5\ \text{k}\Omega} = 6.67\ \text{mA in } 16.7\ \mu\text{s}$$

v_R increases exponentially to 10 V in 16.7 μs

v_L increases exponentially to zero in 16.7 μs

At the falling edge of the pulse,

$$i = 6.67\ \text{mA}$$
$$v_R = 10\ \text{V}$$
$$v_L = -10\ \text{V}$$

After the pulse,

i decreases exponentially to zero in 16.7 μs

v_R decreases exponentially to zero in 16.7 μs

v_L decreases exponentially to zero in 16.7 μs

The waveforms are shown in Figure 37.

▶ FIGURE 37

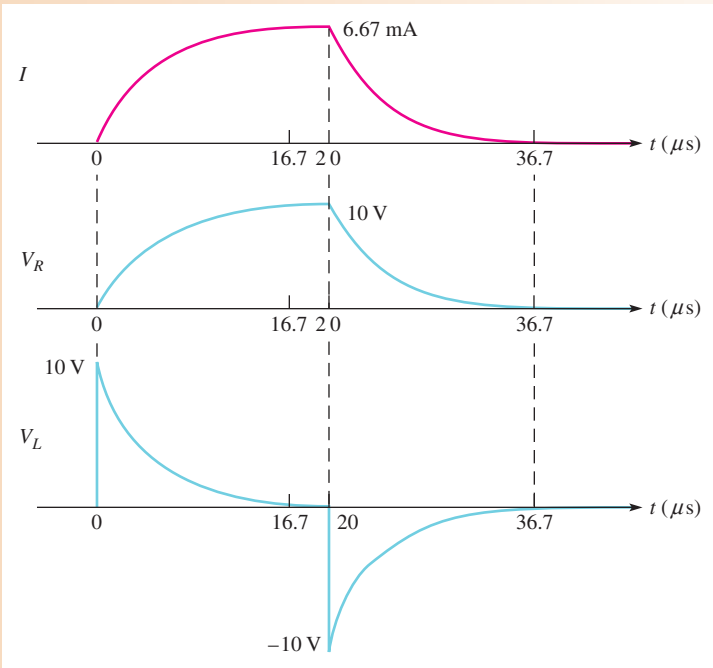

Related Problem What will be the maximum output voltage if the amplitude of the input pulse is increased to 20 V in Figure 36?

www.EngineeringBooksPdf.com

EXAMPLE 8

A 10 V pulse with a width of 10 μs is applied to the integrator in Figure 38. Determine the voltage level that the output will reach during the pulse. If the source has an internal resistance of 300 Ω, how long will it take the output to decrease to zero? Show the output voltage waveform.

▶ **FIGURE 38**

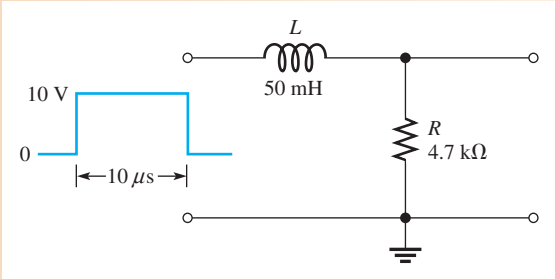

Solution

The coil energizes through the 300 Ω source resistance plus the 4.7 kΩ external resistor. The time constant is

$$\tau = \frac{L}{R_{tot}} = \frac{50\text{ mH}}{4700\,\Omega + 300\,\Omega} = \frac{50\text{ mH}}{5.0\text{ k}\Omega} = 10\ \mu\text{s}$$

Notice that in this case the pulse width is exactly equal to τ. Thus, the output V_R will reach approximately 63% of the full input amplitude in 1τ. Therefore, the output voltage gets to **6.3 V** at the end of the pulse.

After the pulse is gone, the inductor de-energizes back through the 300 Ω source resistance and the 4.7 kΩ resistor. The output voltage takes 5τ to completely decrease to zero.

$$5\tau = 5(10\ \mu\text{s}) = \mathbf{50\ \mu s}$$

The output voltage is shown in Figure 39.

▶ **FIGURE 39**

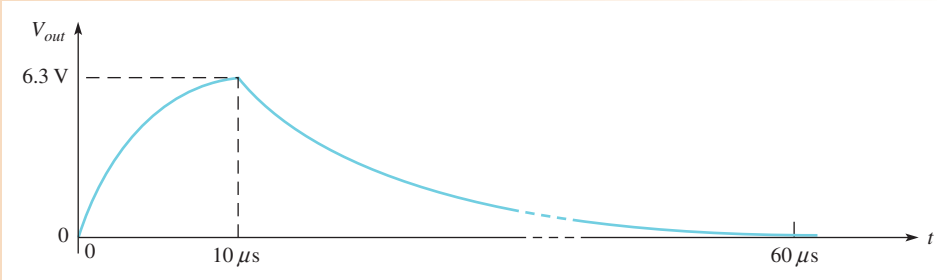

Related Problem

To what approximate maximum value must R be changed in Figure 38 to allow the output voltage to reach the input level during the pulse?

SECTION 6 CHECKUP

1. In an *RL* integrator, across which component is the output voltage taken?
2. When a pulse is applied to an *RL* integrator, what condition must exist in order for the output voltage to reach the amplitude of the input?
3. Under what condition will the output voltage have the approximate shape of the input pulse?

www.EngineeringBooksPdf.com

7 RESPONSE OF *RL* DIFFERENTIATORS TO PULSE INPUTS

A series *RL* circuit in which the output voltage is taken across the inductor is known as a differentiator in terms of time response. The response to a single pulse is discussed but can be extended to repetitive pulses as was done for the case of *RC* differentiators.

After completing this section, you should be able to

- **Analyze the operation of an *RL* differentiator**
  - Determine the response to a single-pulse input

Response of the *RL* Differentiator to a Single Pulse

Figure 40 shows an *RL* differentiator with a pulse generator connected to the input.

▶ FIGURE 40

An *RL* differentiator with a pulse generator connected.

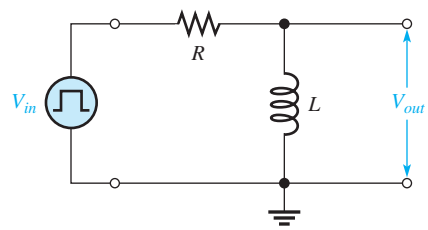

Initially, before the pulse, there is no current in the circuit. When the input pulse goes from its low level to its high level, the inductor prevents a sudden change in current. It does this, as you know, with an induced voltage equal and opposite to the input. As a result, *L* looks like an open, and all of the input voltage appears across it at the instant of the rising edge, as shown in Figure 41(a) with a 10 V pulse.

During the pulse, the current exponentially builds up. As a result, the inductor voltage decreases, as shown in Figure 41(b). The rate of decrease, as you know, depends on the

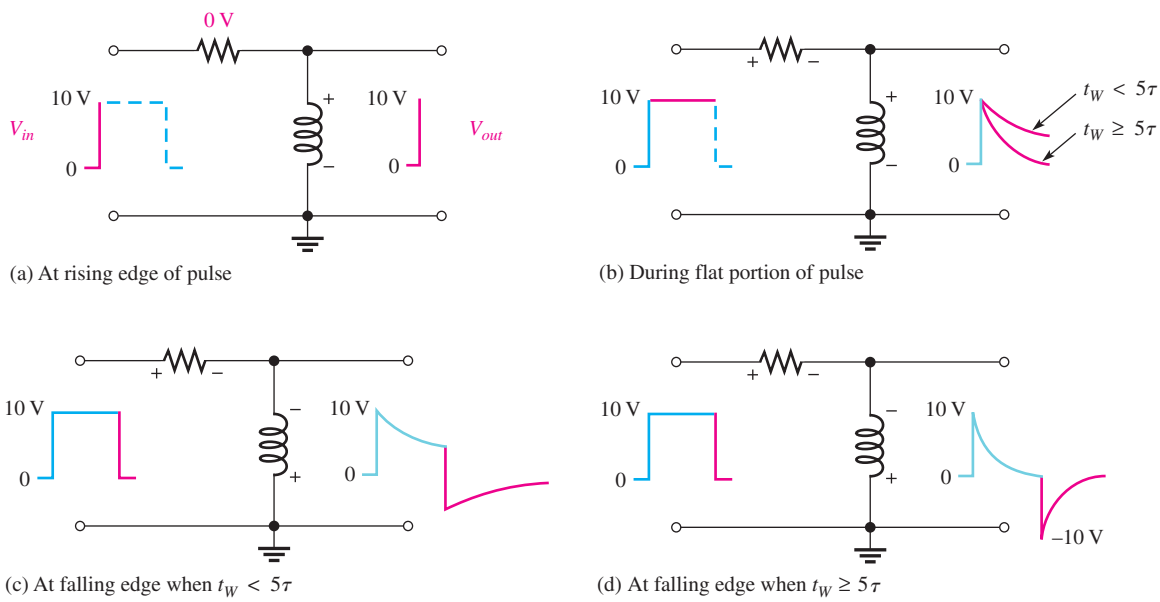

▲ FIGURE 41

Illustration of the response of an *RL* differentiator for both time constant conditions. The pulse generator is connected to the input, but its symbol is not shown, only the pulses.

www.EngineeringBooksPdf.com

L/*R* time constant. When the falling edge of the input occurs, the inductor reacts to keep the current as is, by creating an induced voltage in a direction as indicated in Figure 41(c). This reaction is seen as a sudden negative-going transition of the inductor voltage, as indicated in parts (c) and (d).

Two conditions are possible, as indicated in Figure 41(c) and (d). In part (c), 5τ is greater than the input pulse width, and the output voltage does not have time to decrease to zero. In part (d), 5τ is less than or equal to the pulse width, and so the output decreases to zero before the end of the pulse. In this case a full -10 V transition occurs at the falling edge.

Keep in mind that as far as the input and output waveforms are concerned, the *RL* integrator and differentiator perform the same as their *RC* counterparts.

A summary of the *RL* differentiator response for relationships of various time constants and pulse widths is shown in Figure 42. Compare this figure to Figure 23 for an *RC* differentiator and you will see that the responses are identical.

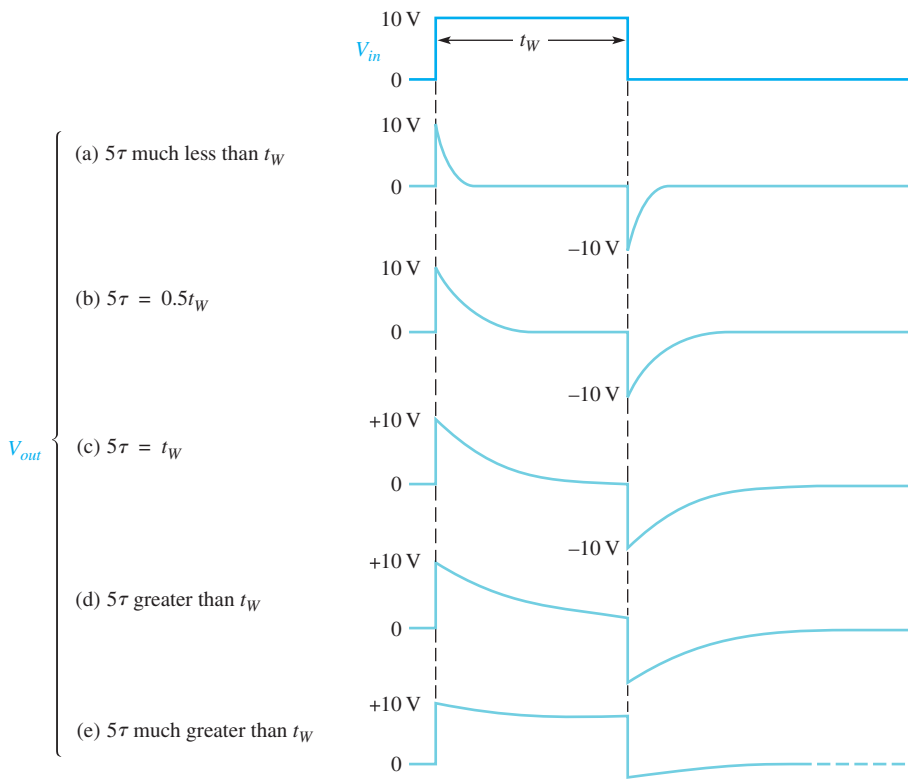

FIGURE 42

Illustration of the variation in output pulse shape with the time constant.

EXAMPLE 9

Show the output voltage waveform for the *RL* differentiator in Figure 43.

FIGURE 43

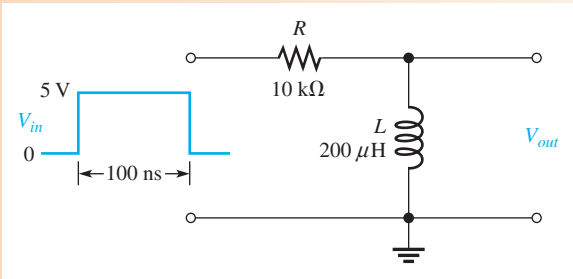

www.EngineeringBooksPdf.com

Solution First, calculate the time constant.

$$\tau = \frac{L}{R} = \frac{200\ \mu\text{H}}{10\ \text{k}\Omega} = 20\ \text{ns}$$

In this case, $t_W = 5\tau$, so the output will decay to zero at the end of the pulse.

On the rising edge, the inductor voltage jumps to +5 V and then decays exponentially to zero. It reaches approximately zero at the instant of the falling edge. On the falling edge of the input, the inductor voltage jumps to −5 V and then goes back to zero. The output waveform is shown in Figure 44.

▶ FIGURE 44

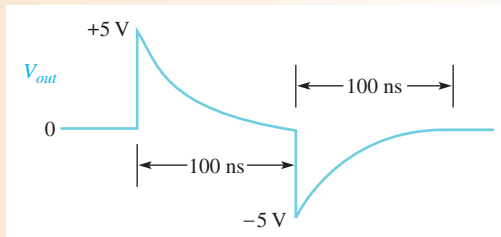

Related Problem Show the output voltage if the input pulse width is reduced to 50 ns in Figure 43.

EXAMPLE 10

Determine the output voltage waveform for the *RL* differentiator in Figure 45.

▶ FIGURE 45

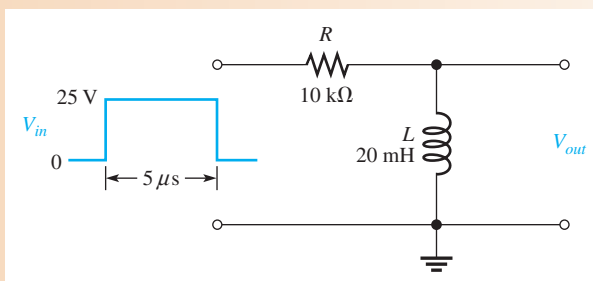

Solution First, calculate the time constant.

$$\tau = \frac{L}{R} = \frac{20\ \text{mH}}{10\ \text{k}\Omega} = 2\ \mu\text{s}$$

On the rising edge, the inductor voltage immediately jumps to +25 V, which is the initial value for the exponential decay. The final value is zero (assuming it could continue to decay). The exponential formula for the voltage at any instant on an inductor is

$$v = V_F + (V_i - V_F)e^{-Rt/L}$$

Substituting 0 for the final value gives the exponential decay formula:

$$v_L = V_i e^{-t/\tau} = (25\ \text{V})e^{-5\mu\text{s}/2/\mu\text{s}} = (25\ \text{V})e^{-2.5} = 2.05\ \text{V}$$

This result is the inductor voltage at the end of the 5 μs input pulse.

On the falling edge, the output immediately drops from +2.05 V to −22.95 V (a 25 V negative-going transition). The complete output waveform is shown in Figure 46.

www.EngineeringBooksPdf.com

▶ FIGURE 46

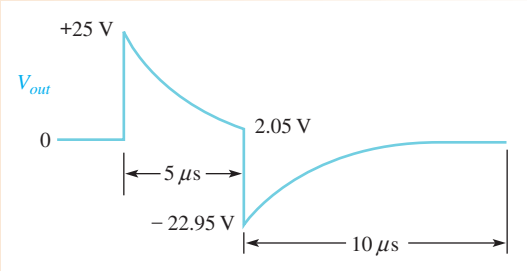

Related Problem What must be the value of R for V_{out} to reach zero by the end of the input pulse in Figure 45?

SECTION 7 CHECKUP

1. In an *RL* differentiator, across which component is the output taken?
2. Under what condition does the output pulse shape most closely resemble the input pulse?
3. If the inductor voltage in an *RL* differentiator is down to +2 V at the end of a +10 V input pulse, to what negative voltage will the output voltage go in response to the falling edge of the input?

8 APPLICATIONS

Although integrators and differentiators are found in many different kinds of applications, only three basic ones are discussed in this section.

After completing this section, you should be able to

- **Discuss some applications of integrators and differentiators**
  - Describe how *RC* integrators are used in timing circuits
  - Describe how an integrator can be used for converting pulse waveforms to dc
  - Describe how a differentiator can be used as a trigger pulse generator

Timing Circuits

RC integrators can be used in timing circuits to set a specified time interval for various purposes. By changing the time constant, the interval can be adjusted. For example, the *RC* integrator circuit in Figure 47(a) is used to provide a delay between the time a power-on switch is closed and the time a certain event is activated by a threshold circuit. The threshold circuit is designed to respond to the input voltage only when the input reaches a certain specified level. Don't worry how the threshold circuit works at this point; you will learn about this type of circuit in a later course.

When the switch is thrown, the capacitor begins to charge at a rate set by the *RC* time constant. After a certain time, the capacitor voltage reaches the threshold value and triggers (turns on) the circuit to activate a device such as a motor, relay, or lamp, depending on the particular application. This action is illustrated by the waveforms in Figure 47(b).

www.EngineeringBooksPdf.com

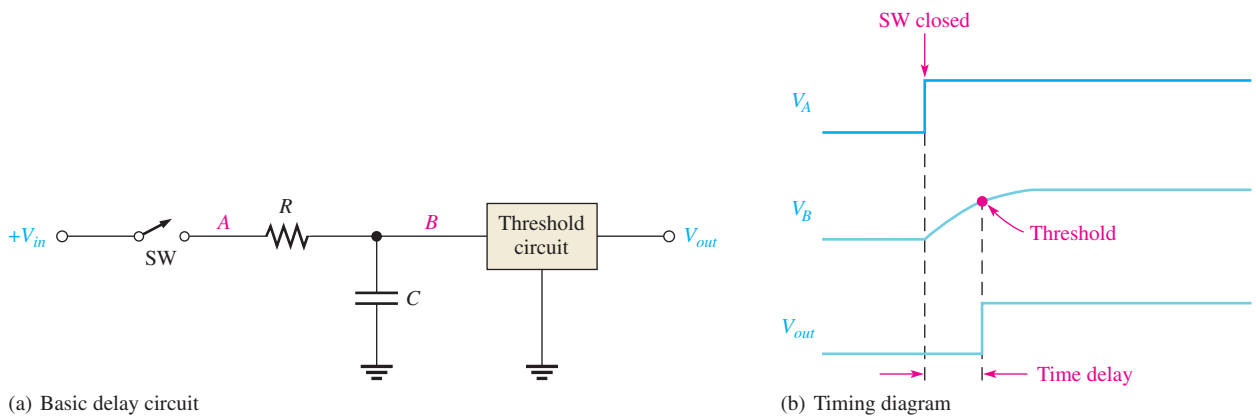

(a) Basic delay circuit

(b) Timing diagram

▲ **FIGURE 47**

A basic time delay application of an *RC* integrator.

EXAMPLE 11

What is the time delay in the circuit of Figure 47(a) with $V_{in} = 9\text{ V}$, $R = 10\text{ M}\Omega$, and $C = 0.47\ \mu\text{F}$? Assume the threshold voltage is 5 V.

Solution Use the exponential formula and solve for time as follows:

$$v = V_F(1 - e^{-t/RC}) = V_F - V_F e^{-t/RC}$$
$$V_F - v = V_F e^{-t/RC}$$
$$e^{-t/RC} = \frac{V_F - v}{V_F}$$

Taking the natural log (ln) of both sides of the equation yields

$$-\frac{t}{RC} = \ln\left(\frac{V_F - v}{V_F}\right)$$
$$t = -RC\ln\left(\frac{V_F - v}{V_F}\right)$$

V_F is the final voltage to which C will charge and equals V_{in}. Substituting values and solving for t yields

$$t = -(10\text{ M}\Omega)(0.47\ \mu\text{F})\ln\left(\frac{9\text{ V} - 5\text{ V}}{9\text{ V}}\right) = -(10\text{ M}\Omega)(0.47\ \mu\text{F})\ln\left(\frac{4\text{ V}}{9\text{ V}}\right) = \mathbf{3.8\ s}$$

Related Problem Find the time delay for the circuit in Figure 47 for $V_{in} = 24\text{ V}$, $R = 10\text{ k}\Omega$, and $C = 1500\text{ pF}$.

A Pulse Waveform-to-DC Converter

An integrating circuit can be used to convert a pulse waveform to a constant dc value equal to the average of the waveform. This is accomplished by using a time constant that is extremely long compared to the period of the pulse waveform, as illustrated in Figure 48(a). Actually, there will be a slight ripple on the output as the capacitor charges and discharges a little. This ripple becomes less as the time constant becomes longer and can approach a constant level, as shown in Figure 48(b). In terms of sinusoidal response, this circuit is a low-pass filter.

A Positive and Negative Trigger Pulse Generator

A differentiator circuit can be used to produce very short duration pulses (spikes) with both positive and negative polarities, as illustrated in Figure 49(a). When the time constant is

www.EngineeringBooksPdf.com

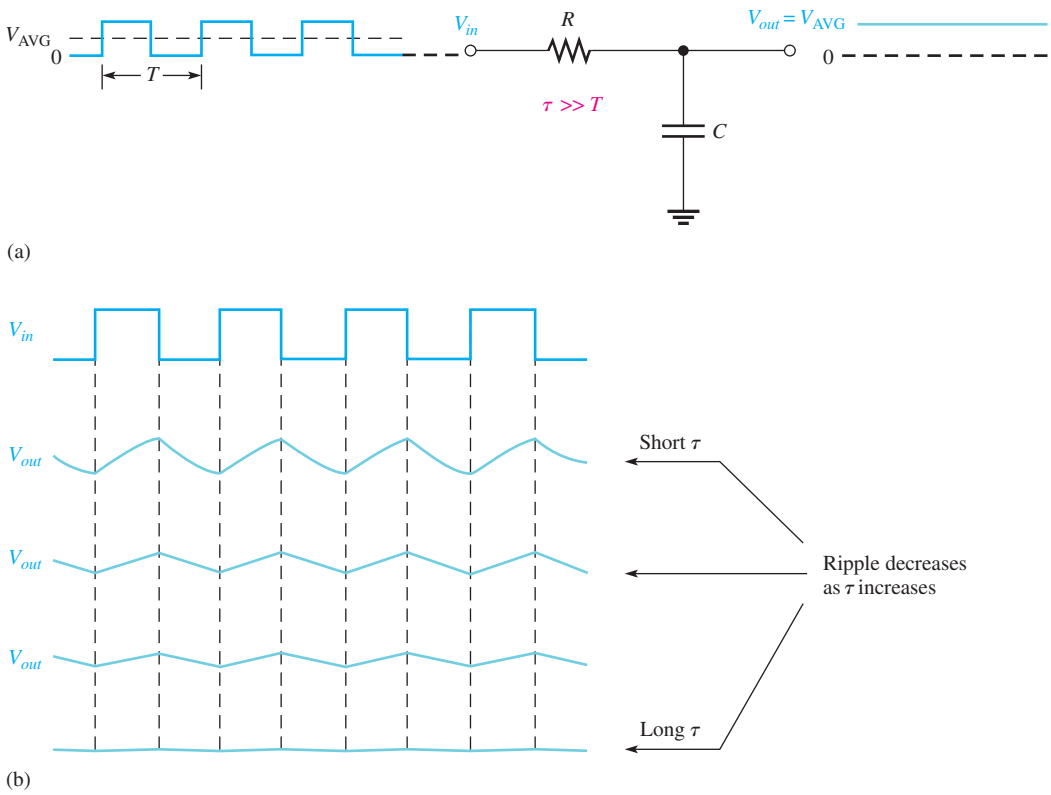

▲ **FIGURE 48**

A long time constant integrator acts as a pulse-to-dc converter.

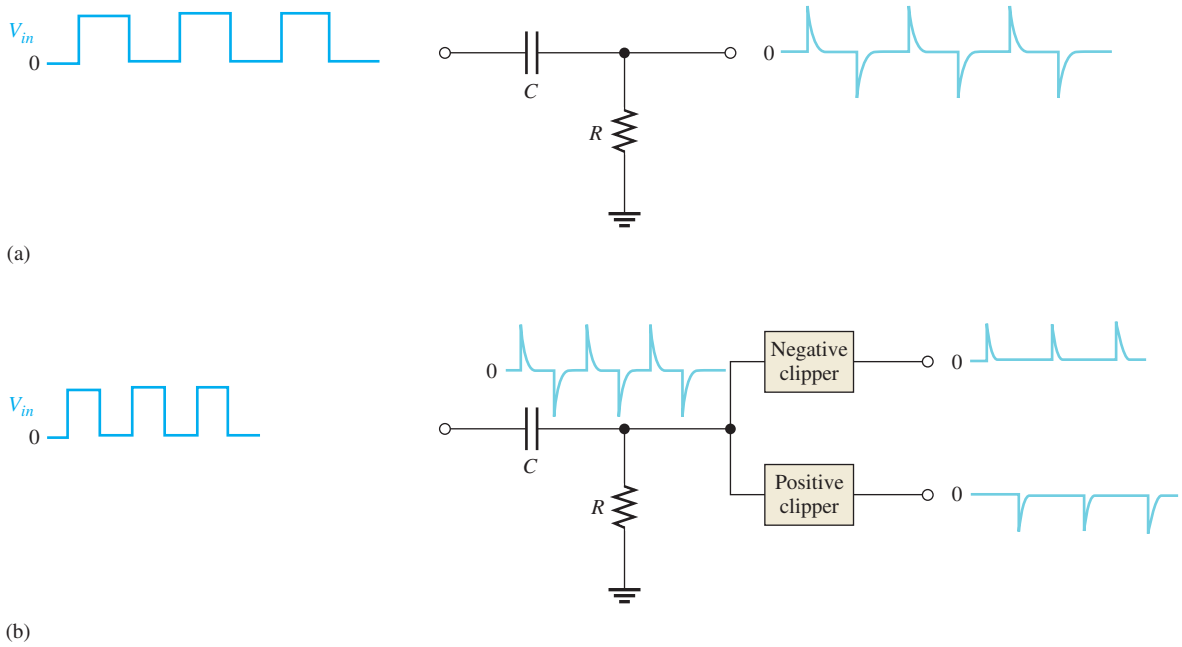

▲ **FIGURE 49**

A very short time constant differentiator generates positive and negative spikes.

www.EngineeringBooksPdf.com

short compared to the pulse width of the input, the differentiator produces a positive spike on each positive-going edge of the input and a negative spike on each negative-going edge.

To separate the positive and negative spikes, two clipping circuits are used, as shown in Figure 49(b). Each clipping circuit consists of a diode, which is a semiconductor device. The negative clipper removes the negative spike and passes the positive spike. The positive clipper does just the opposite.

SECTION 8 CHECKUP

1. How can the delay time in the circuit of Figure 47 be increased?
2. Reducing the value of *R* in Figure 48 will (increase, decrease) the amount of ripple on the output.
3. What characteristic must the differentiator in Figure 49 have in order to produce very short duration spikes on its output?

9 TROUBLESHOOTING

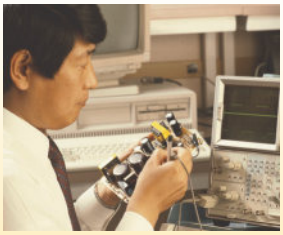

In this section, *RC* circuits with pulse inputs are used to demonstrate the effects of common component failures in selected cases. The concepts can then be easily related to *RL* circuits.

After completing this section, you should be able to

- **Troubleshoot *RC* integrators and *RC* differentiators**
  - Recognize the effect of an open capacitor
  - Recognize the effect of a shorted capacitor
  - Recognize the effect of an open resistor

Open Capacitor

If the capacitor in an *RC* integrator opens, the output has the same waveshape as the input, as shown in Figure 50(a). If the capacitor in an *RC* differentiator opens, the output is zero because it is held at ground through the resistor, as illustrated in part (b).

▶ **FIGURE 50**

Examples of the effect of an open capacitor.

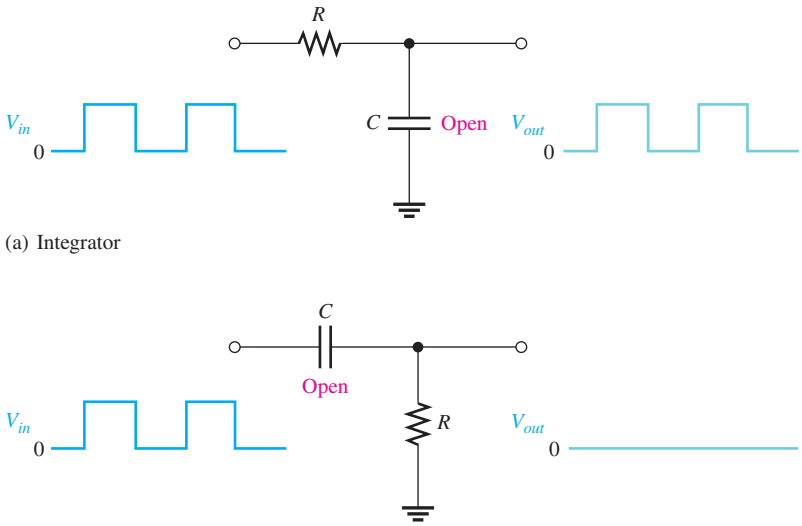

www.EngineeringBooksPdf.com

Shorted Capacitor

If the capacitor in an *RC* integrator shorts, the output is at ground as shown in Figure 51(a). If the capacitor in an *RC* differentiator shorts, the output is the same as the input, as shown in part (b).

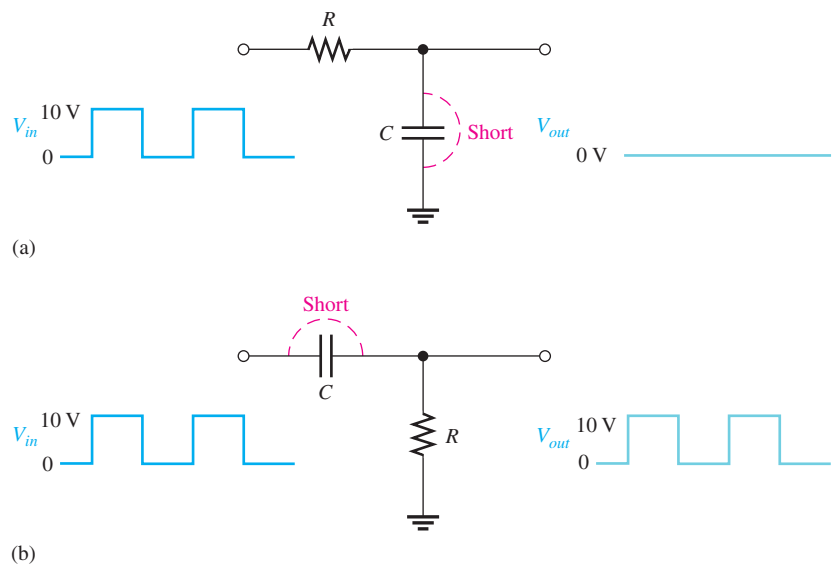

◀ **FIGURE 51**

Examples of the effect of a shorted capacitor.

Open Resistor

If the resistor in an *RC* integrator opens, the capacitor has no discharge path, and, ideally, it will hold any charge it may have. In an actual situation, any charge will gradually leak off or the capacitor will discharge slowly through a measuring instrument connected to the output. This is illustrated in Figure 52(a).

If the resistor in an *RC* differentiator opens, the output looks like the input except for the dc level because the capacitor now must charge and discharge through the extremely high resistance of the oscilloscope, as shown in Figure 52(b).

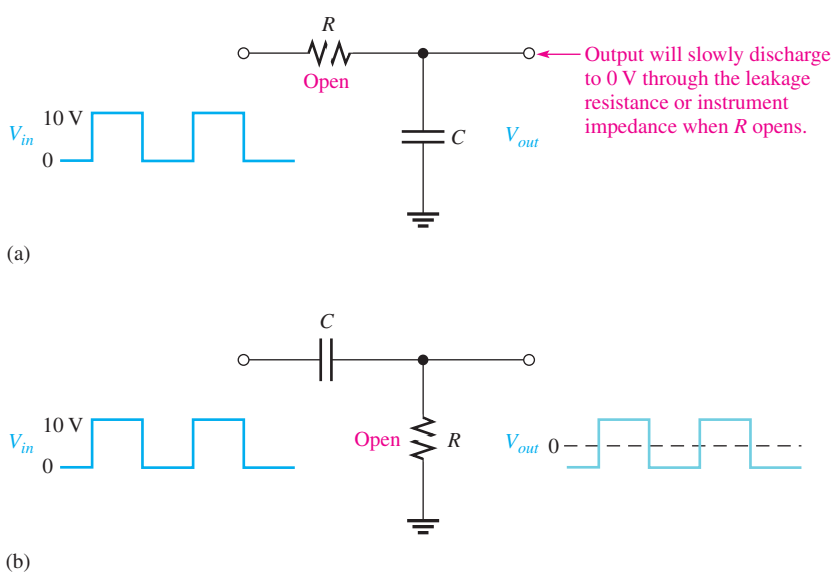

◀ **FIGURE 52**

Examples of the effect of an open resistor.

www.EngineeringBooksPdf.com

SECTION 9 CHECKUP

1. An *RC* integrator has a zero output with a square wave input. What are the possible causes of this problem?
2. If the integrator capacitor is open, what is the output for a square wave input?
3. If the capacitor in a differentiator is shorted, what is the output for a square wave input?

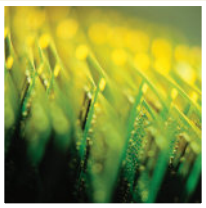

Application Assignment

PUTTING YOUR KNOWLEDGE TO WORK

You have been given the assignment of breadboarding and testing a time-delay circuit that will provide five switch-selectable delay times. An *RC* integrator is selected for this application. The input is a 5 V pulse of long duration which begins the time delay. The exponential output voltage goes to a threshold trigger circuit that is used to turn the power on to a portion of a system after any one of the five selectable time delays.

A schematic of the selectable time-delay integrator is shown in Figure 53. The *RC* integrator is driven by a positive pulse input, and the output is the exponential voltage across the selected capacitor. The output voltage triggers a threshold circuit at the 3.5 V level, which then turns on the power to a portion of a system. The basic concept of operation is shown in Figure 54. In this application, the delay time of the integrator is specified as the time from the rising edge of the input pulse to the point where the output voltage reaches 3.5 V. The specified time delays are listed in Table 1.

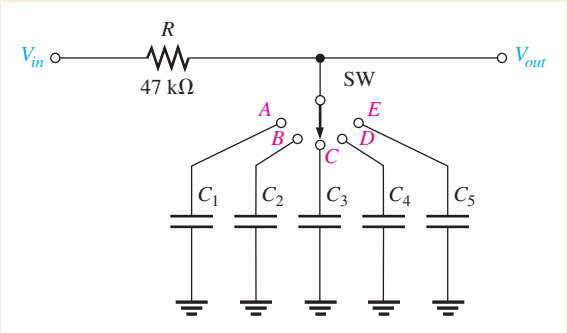

▶ **FIGURE 53**

Integrator delay circuit.

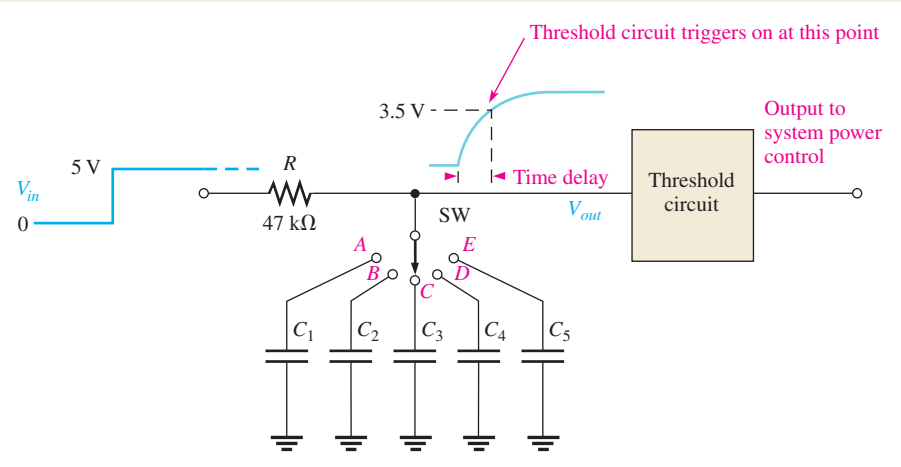

▲ **FIGURE 54**

Illustration of the time-delay operation.

www.EngineeringBooksPdf.com

▼ TABLE 1

SWITCH POSITION	DELAY TIME
A	10 ms
B	25 ms
C	40 ms
D	65 ms
E	85 ms

Step 1: Capacitor Values

Determine a value for each of the five capacitors in the time-delay circuit that will provide a delay time within 10% of the specified delay time. Select from the following list of standard values (all are in μF): 0.1, 0.12, 0.15, 0.18, 0.22, 0.27, 0.33, 0.39, 0.47, 0.56, 0.68, 0.82, 1.0, 1.2, 1.5, 1.8, 2.2, 2.7, 3.3, 3.9, 4.7, 5.6, 6.8, and 8.2.

Step 2: Circuit Connections

Refer to Figure 55. The components for the time-delay circuit are assembled, but not connected, on the breadboard. Using

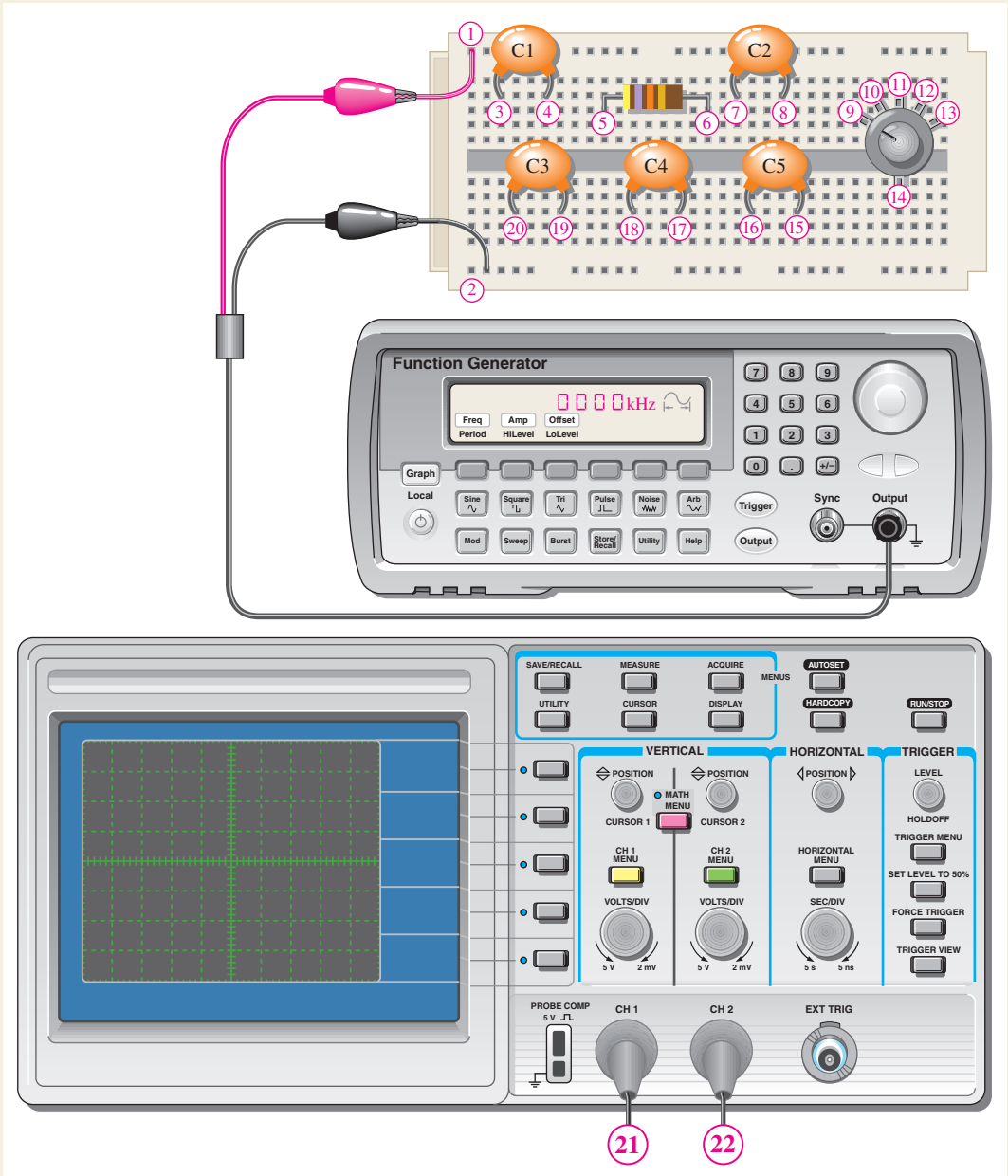

▲ FIGURE 55

Time-delay circuit breadboard and test instruments.

www.EngineeringBooksPdf.com

the circled numbers, develop a point-to-point wiring list to show how the circuit and measurement instruments should be connected.

Step 3: Test Procedure and Instrument Settings

Develop a procedure for fully testing the time-delay circuit. Specify the amplitude, frequency, and duty cycle settings for the function generator in order to test each delay time. Specify the oscilloscope sec/div settings for measuring each of the five specified delay times.

Step 4: Measurement

Explain how you will verify that each switch setting produces the proper output delay time.

Review

1. Explain why the input pulse to the time-delay circuit must be of sufficiently long duration.
2. Indicate how you would modify the time-delay circuit so that each selected time delay had some adjustment range.

SUMMARY

- In an *RC* integrator, the output voltage is taken across the capacitor.
- In an *RC* differentiator, the output voltage is taken across the resistor.
- In an *RL* integrator, the output voltage is taken across the resistor.
- In an *RL* differentiator, the output voltage is taken across the inductor.
- In an integrator, when the pulse width (t_W) of the input is much less than the transient time, the output voltage approaches a constant level equal to the average value of the input.
- In an integrator, when the pulse width of the input is much greater than the transient time, the output voltage approaches the shape of the input.
- In a differentiator, when the pulse width of the input is much less than the transient time, the output voltage approaches the shape of the input but with an average value of zero.
- In a differentiator, when the pulse width of the input is much greater than the transient time, the output voltage consists of narrow, positive-going and negative-going spikes occurring on the leading and trailing edges of the input pulses.
- *RC* integrators can be used to set up a specified time delay.

KEY TERMS

Differentiator A circuit producing an output that approaches the mathematical derivative of the input.

Integrator A circuit producing an output that approaches the mathematical integral of the input.

Steady state The equilibrium condition of a circuit that occurs after an initial transient time.

Transient time An interval equal to approximately five time constants.

TRUE/FALSE QUIZ

Answers are at the end of the chapter.

1. Transient time for an *RC* circuit is the same as the time constant.
2. The capacitor in a pulsed *RC* circuit will fully charge if the pulse width is equal or greater than 5τ.
3. If the source voltage is increased in a pulsed *RC* circuit, the time constant will increase.
4. Under certain conditions, the output of an *RC* integrator can have the same maximum and minimum voltage as the input.
5. Under certain conditions, the output of an *RC* integrator can be equal to the average voltage of the input.
6. The instant after a pulse is applied to an *RC* differentiator circuit, the output will be approximately equal to the peak value of the pulse.
7. In an *RL* integrator, the output is taken across the inductor.
8. If the inductor in an *RL* differentiator is open, the output will be zero.
9. The time constant for an *RL* differentiator is inversely proportional to the resistance.
10. A circuit that can develop positive and negative triggers from a square wave is a differentiator.

www.EngineeringBooksPdf.com

SELF-TEST

Answers are at the end of the chapter.

1. The output of an *RC* integrator is taken across the
   (a) resistor **(b)** capacitor **(c)** source **(d)** coil
2. When a 10 V input pulse with a width equal to one time constant is applied to an *RC* integrator, the capacitor charges to
   (a) 10 V **(b)** 5 V **(c)** 6.3 V **(d)** 3.7 V
3. When a 10 V input pulse with a width equal to one time constant is applied to an *RC* differentiator, the capacitor charges to
   (a) 6.3 V **(b)** 10 V **(c)** 5 V **(d)** 3.7 V
4. In an *RC* integrator, the output pulse closely resembles the input pulse when
   (a) τ is much larger than the pulse width
   (b) τ is equal to the pulse width
   (c) τ is less than the pulse width
   (d) τ is much less than the pulse width
5. In an *RC* differentiator, the output pulse closely resembles the input when
   (a) τ is much larger than the pulse width
   (b) τ is equal to the pulse width
   (c) τ is less than the pulse width
   (d) τ is much less than the pulse width
6. The positive and negative portions of a differentiator's output voltage are maximum when
   (a) $5\tau < t_W$ **(b)** $5\tau > t_W$ **(c)** $5\tau = t_W$ **(d)** $5\tau > 0$
7. The output of an *RL* integrator is taken across the
   (a) resistor **(b)** coil **(c)** source **(d)** capacitor
8. The maximum current in an *RL* differentiator is
   (a) $I = \dfrac{V_p}{X_L}$ **(b)** $I = \dfrac{V_p}{Z}$ **(c)** $I = \dfrac{V_p}{R}$
9. The current in an *RL* differentiator reaches its maximum possible value when
   (a) $5\tau = t_W$ **(b)** $5\tau < t_W$ **(c)** $5\tau > t_W$ **(d)** $\tau = 0.5t_W$
10. If you have an *RC* and an *RL* differentiator with equal time constants sitting side-by-side and you apply the same input pulse to both,
    (a) the *RC* has the widest output pulse
    (b) the *RL* has the most narrow spikes on the output
    (c) the output of one is an increasing exponential and the output of the other is a decreasing exponential
    (d) you can't tell the difference by observing the output waveforms

PROBLEMS

Answers to odd-numbered problems are at the end of the chapter.

BASIC PROBLEMS

SECTION 1 The *RC* Integrator

1. An integrator has $R = 2.2\,\text{k}\Omega$ in series with $C = 0.047\,\mu\text{F}$. What is the time constant?
2. Determine how long it takes the capacitor in an integrating circuit to reach full charge for each of the following series *RC* combinations:
   (a) $R = 47\,\Omega, C = 47\,\mu\text{F}$
   (b) $R = 3300\,\Omega, C = 0.015\,\mu\text{F}$
   (c) $R = 22\,\text{k}\Omega, C = 100\,\text{pF}$
   (d) $R = 4.7\,\text{M}\Omega, C = 10\,\text{pF}$

www.EngineeringBooksPdf.com

3. It is required that an integrator have a time constant of approximately 6 ms. If $C = 0.22\ \mu F$, what standard value of R must be used?
4. For the capacitor in the integrator of Problem 3 to fully charge during a pulse, what must be the minimum width of the pulse?

SECTION 2 Response of *RC* Integrators to a Single Pulse

5. A 20 V pulse is applied to an *RC* integrator. The pulse width equals one time constant. To what voltage does the capacitor charge during the pulse? Assume that it is initially uncharged.
6. Repeat Problem 5 for the following values of t_W:
   (a) 2τ **(b)** 3τ **(c)** 4τ **(d)** 5τ
7. Show the approximate shape of an integrator output voltage where 5τ is much less than the pulse width of a 10 V square wave input. Repeat for the case in which 5τ is much larger than the pulse width.
8. Determine the output voltage for an integrator with a single-pulse input, as shown in Figure 56. For repetitive pulses, how long will it take this circuit to reach steady state?

▶ FIGURE 56

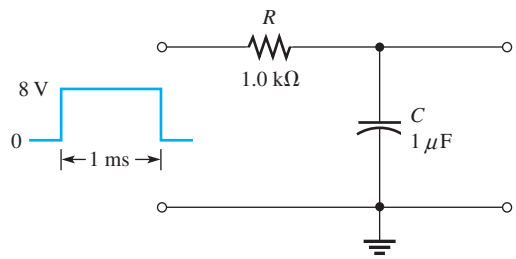

SECTION 3 Response of *RC* Integrators to Repetitive Pulses

9. Draw the integrator output in Figure 57 showing maximum voltages.

▶ FIGURE 57

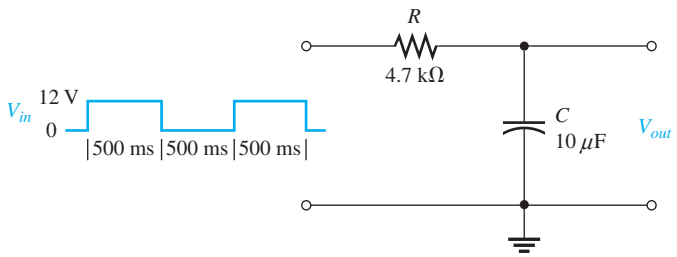

10. A 1 V, 10 kHz pulse waveform with a duty cycle of 25% is applied to an integrator with $\tau = 25\ \mu s$. Graph the output voltage for three initial pulses. C is initially uncharged.
11. What is the steady-state output voltage of the *RC* integrator with a square wave input shown in Figure 58?

▶ FIGURE 58

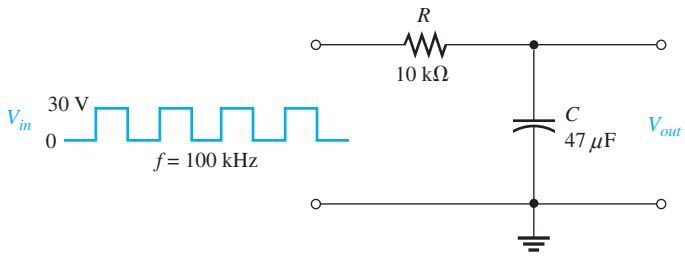

www.EngineeringBooksPdf.com

SECTION 4 Response of *RC* Differentiators to a Single Pulse

12. Repeat Problem 7 for an *RC* differentiator.

13. Redraw the circuit in Figure 56 to make it a differentiator, and repeat Problem 8.

SECTION 5 Response of *RC* Differentiators to Repetitive Pulses

14. Draw the differentiator output in Figure 59, showing maximum voltages.

▶ FIGURE 59

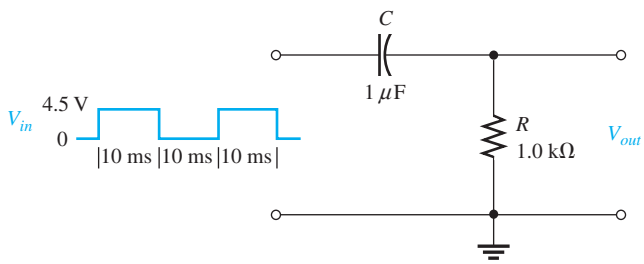

15. What is the steady-state output voltage of the differentiator with the square wave input shown in Figure 60?

▶ FIGURE 60

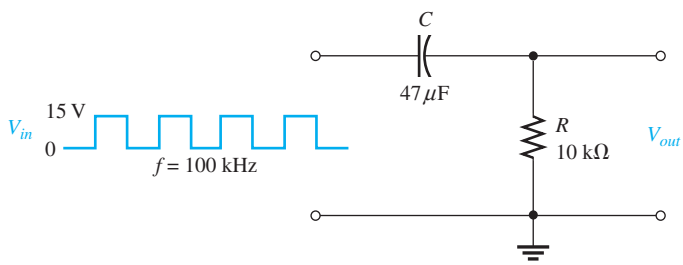

SECTION 6 Response of *RL* Integrators to Pulse Inputs

16. Determine the output voltage for the circuit in Figure 61. A single-pulse input is applied as shown.

17. Draw the integrator output in Figure 62, showing maximum voltages.

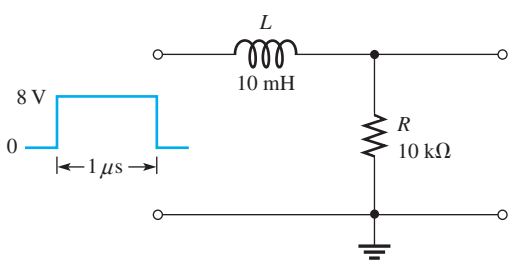

▲ FIGURE 61

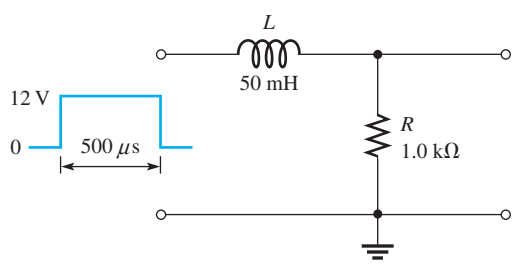

▲ FIGURE 62

SECTION 7 Response of *RL* Differentiators to Pulse Inputs

18. **(a)** What is τ in Figure 63?

(b) Draw the output voltage.

19. Draw the output waveform if a periodic pulse waveform with $t_W = 250$ ns and $T = 600$ ns is applied to the circuit in Figure 63.

www.EngineeringBooksPdf.com

▶ FIGURE 63

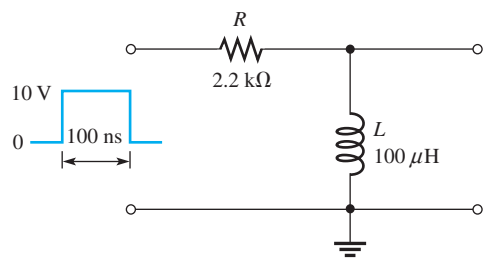

SECTION 8 Applications

20. What is the instantaneous voltage at point *B* in Figure 47 440 μs after the switch is closed for $R = 22\,\text{k}\Omega$ and $C = 0.001\,\mu\text{F}$? $V_{in} = 10\,\text{V}$.

21. Ideally, what is the output of an *RC* integrator when the input is a square wave with an amplitude of 12 V? Assume that the time constant is much greater than the period of the input signal?

SECTION 9 Troubleshooting

22. Determine the most likely fault(s) in the circuit of Figure 64(a) for each set of waveforms in parts (b) and (c). V_{in} is a square wave with a period of 8 ms.

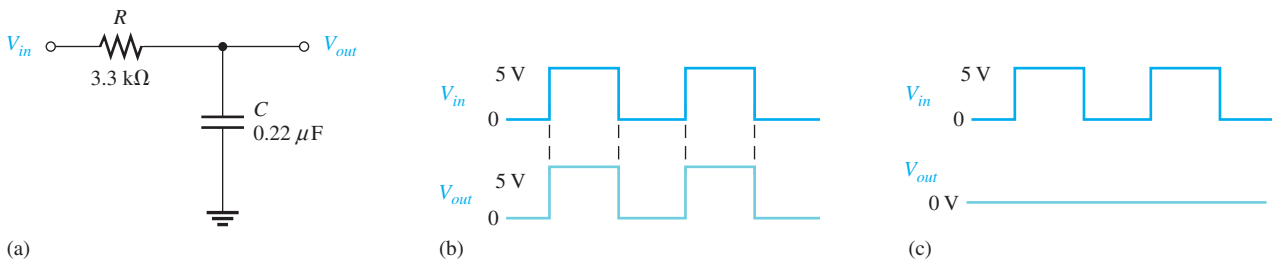

▲ FIGURE 64

23. Determine the most likely fault(s), if any, in the circuit of Figure 65(a) for each set of waveforms in parts (b) and (c). V_{in} is a square wave with a period of 8 ms.

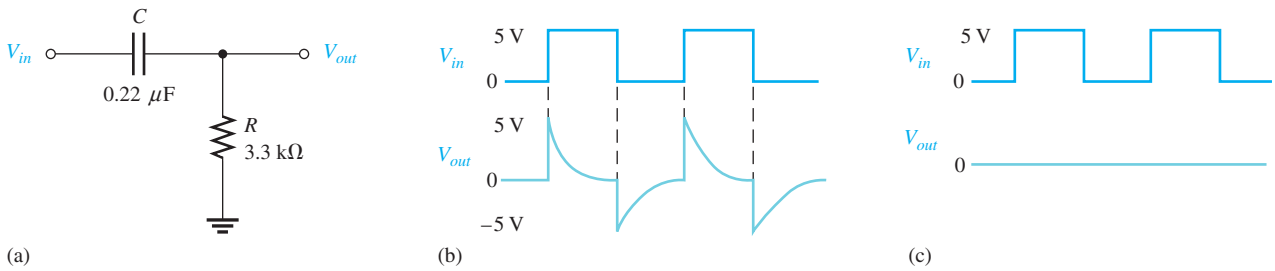

▲ FIGURE 65

ADVANCED PROBLEMS

24. **(a)** What is τ in Figure 66?

(b) Draw the output voltage.

▶ FIGURE 66

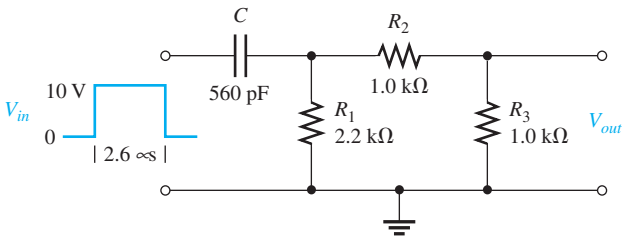

www.EngineeringBooksPdf.com

25. **(a)** What is τ in Figure 67?

(b) Draw the output voltage.

▶ FIGURE 67

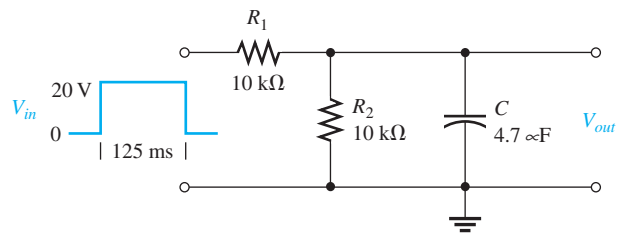

26. Determine the time constant in Figure 68. Is this circuit an integrator or a differentiator?

▶ FIGURE 68

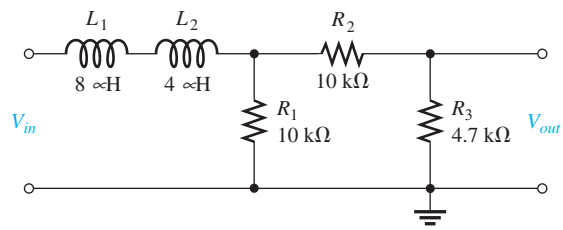

27. In a time-delay circuit like that of Figure 47, what time constant will produce a 1 s delay if the threshold of the circuit is 2.5 V and the amplitude of the input is 5 V?

28. Draw the schematic for the circuit in Figure 69 and determine if the oscilloscope presentation is correct.

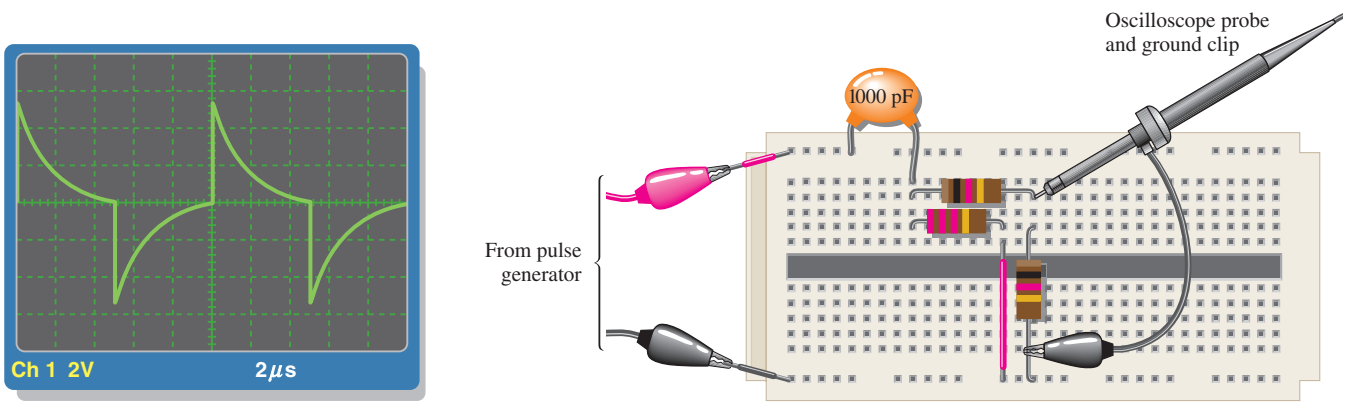

(a) Oscilloscope display

(b) Circuit board with instrument leads connected

▲ FIGURE 69

MULTISIM TROUBLESHOOTING PROBLEMS

29. Open file P15-29; files are found at www.pearsonhighered.com/floyd/. Test the circuit. If there is a fault, identify it.

30. Open file P15-30 and test the circuit. If there is a fault, identify it.

31. Determine if there is a fault in the circuit in file P15-31. If so, identify it.

32. Identify any faulty component in the circuit in file P15-32.

www.EngineeringBooksPdf.com

ANSWERS

SECTION CHECKUPS

SECTION 1 The *RC* Integrator

1. An integrator is a series *RC* circuit with a pulse input in which the output is across the capacitor.
2. A voltage applied to the input causes the capacitor to charge. Zero volts across the input causes the capacitor to discharge.

SECTION 2 Response of *RC* Integrators to a Single Pulse

1. The output of an integrator reaches full amplitude when $5\tau \leq t_W$.
2. $V_{out} = (0.632)1\text{ V} = 0.632\text{ V}$; $t_{disch} = 5\tau = 51.7\text{ ms}$.
3. See Figure 70.

▶ FIGURE 70

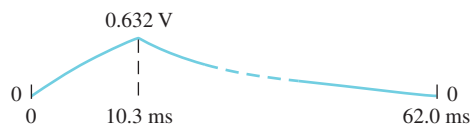

4. No, *C* will not fully charge.
5. The output is approximately the shape of the input when $5\tau \ll t_W$ (5τ much less than t_W).

SECTION 3 Response of *RC* Integrators to Repetitive Pulses

1. An integrator capacitor will fully charge and discharge when $5\tau \leq t_W$ and $5\tau \leq$ time between pulses.
2. The output looks like the input.
3. transient time
4. Steady state is the response after the transient time has passed.
5. The output is a dc voltage that is the average of the input.

SECTION 4 Response of *RC* Differentiators to a Single Pulse

1. See Figure 71.

▶ FIGURE 71

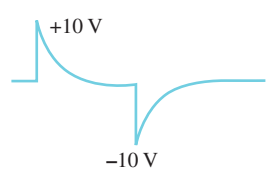

2. The output approximates the input when $5\tau \gg t_W$.
3. The output consists of a positive and a negative spike.
4. $V_R = +5\text{ V} - 15\text{ V} = -10\text{ V}$

SECTION 5 Response of *RC* Differentiators to Repetitive Pulses

1. *C* fully charges and discharges when $5\tau \leq t_W$ and $5\tau \leq$ time between pulses.
2. The output consists of positive and negative spikes.
3. $V_{out} = 0\text{ V}$

www.EngineeringBooksPdf.com

SECTION 6 Response of *RL* Integrators to Pulse Inputs

1. The output is across the resistor.
2. The output reaches the input amplitude when $5\tau \leq t_W$.
3. The output approximates the input when $5\tau \ll t_W$.

SECTION 7 Response of *RL* Differentiators to Pulse Inputs

1. The output is across the inductor.
2. The output approximates the input when $5\tau \gg t_W$.
3. $V_{out} = 2\text{ V} - 10\text{ V} = -8\text{ V}$

SECTION 8 Applications

1. Increase the time constant to increase delay time.
2. Reducing R will increase ripple.
3. A very short time constant produces very short duration spikes.

SECTION 9 Troubleshooting

1. Zero output of *RC* integrator indicates shorted capacitor, open resistor, no source voltage, or open contact.
2. An open integrator capacitor results in an output exactly like the input.
3. A shorted differentiator capacitor results in an output exactly like the input.

RELATED PROBLEMS FOR EXAMPLES

1 8.65 V

2 24.7 V

3 1.10 V

4 See Figure 72.

▶ FIGURE 72

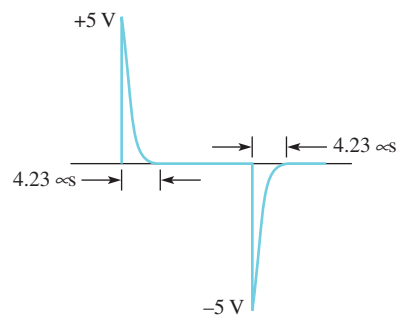

5 892 mV

6 10 kΩ

7 20 V

8 24.7 kΩ (assuming $R_s = 300\ \Omega$)

9 See Figure 73.

▶ FIGURE 73

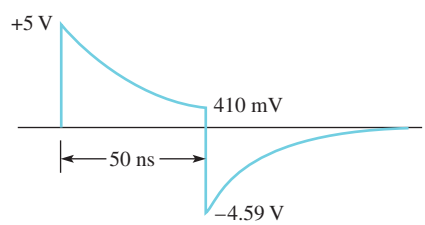

www.EngineeringBooksPdf.com

10 20 kΩ

11 3.5 μs

TRUE/FALSE QUIZ

1. F	**2.** T	**3.** F	**4.** T	**5.** T
6. T	**7.** F	**8.** F	**9.** T	**10.** T

SELF-TEST

1. (b)	**2.** (c)	**3.** (a)	**4.** (d)	**5.** (a)
6. (a)	**7.** (a)	**8.** (c)	**9.** (b)	**10.** (d)

PROBLEMS – ODD-NUMBERED ANSWERS

1. 103 μs

3. 27 kΩ

5. 12.6 V

7. See Figure P–19.

▶ FIGURE P–19

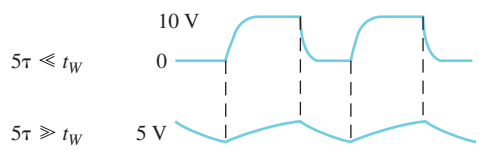

9. See Figure P–20.

▶ FIGURE P–20

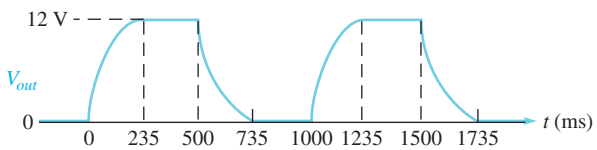

11. 15 V dc level with a very small charge/discharge fluctuation

13. Exchange positions of *R* and *C*. See Figure P–21 for the output voltage. $5\tau = 5$ ms (repeating Problem 8)

▶ FIGURE P–21

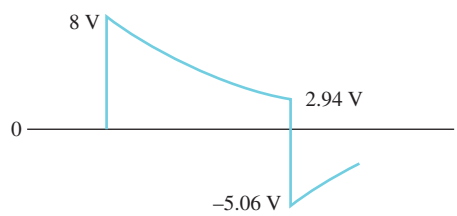

15. Approximately the same shape as input, but with an average value of 0 V

17. See Figure P–22.

▶ FIGURE P–22

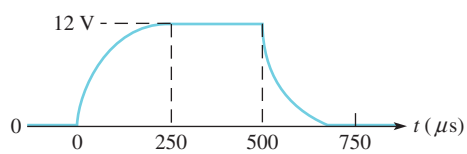

www.EngineeringBooksPdf.com

19. See Figure P–23.

▶ **FIGURE P–23**

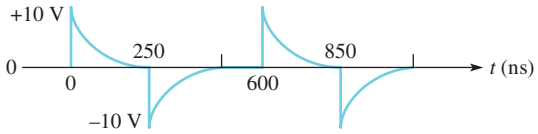

21. A 6 V dc level

23. **(b)** No fault

(c) Open *C* or shorted *R*

25. **(a)** 23.5 ms

(b) See Figure P–24.

▶ **FIGURE P–24**

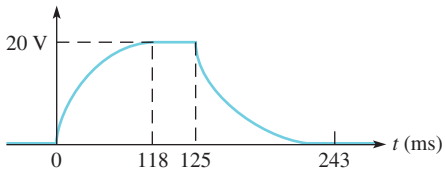

27. 1.44 s

29. Capacitor is open.

31. No fault

PHOTO CREDITS FOR REOCCURRING IMAGES

CD Icon: Stockbyte/Getty Images; **Computer Chips:** Photodisc/Thinkstock; **Computer:** Jeff Maloney/Photodisc/Getty Images; **Fiber Optic:** discpicture/Shutterstock.

www.EngineeringBooksPdf.com

This page intentionally left blank

www.EngineeringBooksPdf.com

Diodes and Applications

CHAPTER OUTLINE

1 Introduction to Semiconductors
2 The Diode
3 Diode Characteristics
4 Diode Rectifiers
5 Power Supplies
6 Special-Purpose Diodes
7 Troubleshooting
Application Assignment: Putting Your Knowledge to Work

CHAPTER OBJECTIVES

- Understand the basic structure of semiconductors and how they conduct current
- Describe the characteristics and biasing of a diode
- Describe the basic diode characteristics
- Analyze the operation of a half-wave rectifier and a full-wave rectifier
- Describe the operation of power supplies
- Understand the basic operation of four special-purpose diodes and describe some applications
- Troubleshoot power supplies and diode circuits, using the APM approach

KEY TERMS

- Silicon
- Hole
- Intrinsic semiconductor
- Doping
- Majority carrier
- Minority carrier
- *PN* junction
- Diode
- Barrier potential
- Forward bias
- Reverse bias
- Reverse breakdown
- Half-wave rectifier
- PIV
- Full-wave rectifier
- Bridge rectifier
- DC power supply
- Regulator
- Capacitor-input filter
- Integrated circuit (IC)
- Line regulation
- Load regulation
- Zener diode
- Varactor
- LED
- Photodiode

Streeter Photography/Alamy

APPLICATION ASSIGNMENT PREVIEW

As a technician in an industrial manufacturing facility, you are responsible for maintaining and troubleshooting all of the automated production equipment. One particular system is used to count objects on a conveyor for control and inventory purposes. In order to check out and troubleshoot this system you must have a knowledge of power supply rectifiers, zener diodes, light-emitting diodes (LEDs), and photodiodes. After studying this chapter, you should be able to complete the application assignment.

VISIT THE COMPANION WEBSITE

Study aids for this chapter are available at http://www.pearsonhighered.com/floyd/

INTRODUCTION

To understand electronic devices you need a basic knowledge of the structure of atoms. In this chapter, the semiconductive materials used in manufacturing diodes as well as transistors and integrated circuits are discussed. An important concept is that of the *pn* junction that is formed when two different types of semiconductive material are joined. The *pn* junction is fundamental to the operation of a diode as well as certain types of transistors. The function of the *pn* junction is an essential factor in making electronic circuits operate properly. Also, diode characteristics are introduced, and you will learn how to properly use a diode in a circuit and some basic applications.

From Chapter 16 of *Electronics Fundamentals: Circuits, Devices, and Applications*, Eighth Edition, Thomas L. Floyd, David M. Buchla. Copyright © 2010 by Pearson Education, Inc. Published by Pearson Prentice Hall. All rights reserved.

www.EngineeringBooksPdf.com

1 INTRODUCTION TO SEMICONDUCTORS

In this section, atomic theory is discussed in relation to semiconductors that are used in devices such as diodes and transistors.

After completing this section, you should be able to

- **Understand the basic structure of semiconductors and how they conduct current**
  - Describe the atomic structure of silicon and germanium
  - Discuss covalent bonding in silicon
  - Explain how current occurs with electrons and holes in a semiconductor
  - Describe the properties of *n*-type and *p*-type semiconductors

Silicon and Germanium Atoms

Two types of semiconductive materials are **silicon** and germanium. Both the silicon and the germanium atoms have four valence electrons. These atoms differ in that silicon has 14 protons in its nucleus and germanium has 32. Figure 1 shows a representation of the atomic structure for both materials.

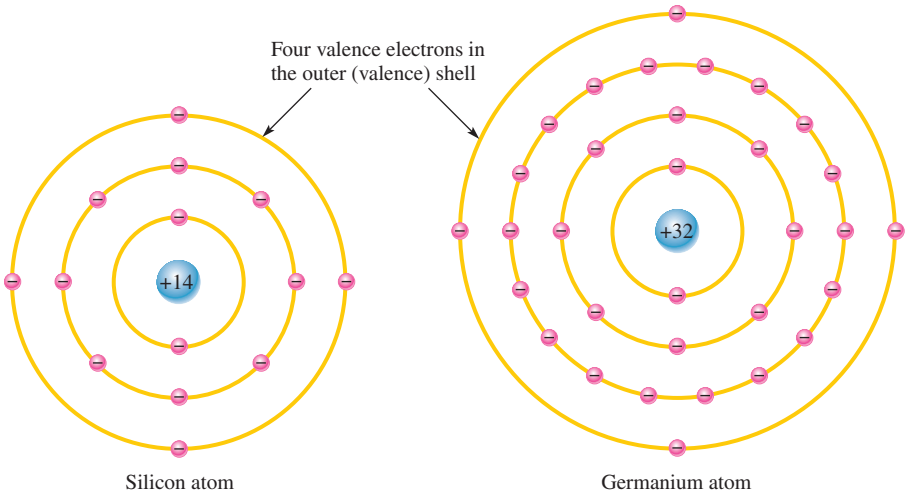

▶ FIGURE 1

Diagrams of the silicon and germanium atoms.

The valence electrons in germanium are in the fourth shell while the ones in silicon are in the third shell, closer to the nucleus. This means that the germanium valence electrons are at higher energy levels than those in silicon and, therefore, require a smaller amount of additional energy to escape from the atom. This property makes germanium more unstable than silicon at high temperatures, which is the main reason silicon by far is the most widely used semiconductive material.

Although silicon is used in virtually all integrated circuits, there are some limited applications for germanium. Recent advances have created a "porous germanium" that has a nanoscale honeycombed lattice arrangement of germanium atoms with a huge surface area for a given amount of material. This has opened some interesting possibilities for applications of germanium in sensitive detectors and solar cells. Because germanium has

This icon indicates selected websites for further information on topics in this section. See the Companion Website provided with this text.

www.EngineeringBooksPdf.com

only limited applications, we will assume silicon is the semiconductor used in discussions of electronic devices in this text.

Atomic Bonding

When certain atoms combine to form a solid material, they arrange themselves in a fixed pattern called a **crystal**. The atoms within the silicon crystal structure are held together by **covalent** bonds, which are created by the sharing of the valence electrons of each atom.

Figure 2 shows how each silicon (Si) atom positions itself with four adjacent atoms to form a silicon crystal. A silicon atom with its four valence electrons shares an electron with each of its four neighbors. This effectively creates eight valence electrons for each atom and produces a state of chemical stability. Also, this sharing of valence electrons produces the covalent bonds that hold the atoms together; each shared electron is attracted equally by two adjacent atoms. An **intrinsic** crystal is one that has no impurities.

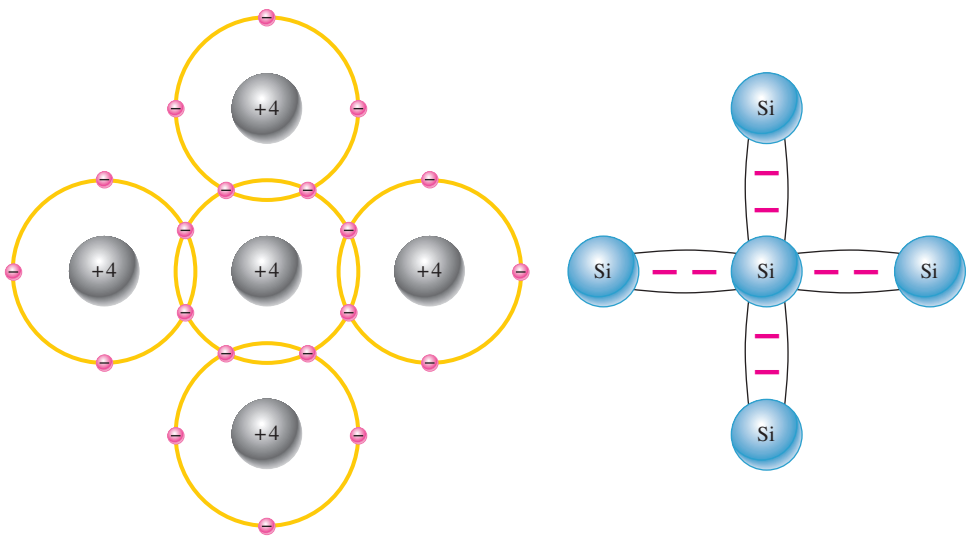

(a) The center silicon atom shares an electron with each of the four surrounding silicon atoms, creating a covalent bond with each. The surrounding atoms are in turn bonded to other atoms, and so on.

(b) Bonding diagram. The red negative signs represent the shared valence electrons.

◀ **FIGURE 2**

Covalent bonds in a silicon crystal. The actual crystal is three-dimensional.

Conduction Electrons and Holes

An energy band diagram is shown in Figure 3 for a silicon crystal with only unexcited atoms (no external energy such as heat). This condition occurs *only* at a temperature of absolute 0 Kelvin.

An intrinsic (pure) silicon crystal at room temperature has sufficient heat (thermal) energy for some valence electrons to jump the gap from the valence band into the conduction band, becoming free electrons. This situation is illustrated in the energy diagram of Figure 4(a) and in the bonding diagram of Figure 4(b).

When an electron jumps to the conduction band, a vacancy is left in the valence band within the crystal. This vacancy is called a **hole**. For every electron raised to the conduction band by external energy, there is one hole left in the valence band, creating what is called an *electron-hole pair*. **Recombination** occurs when a conduction-band electron loses energy and falls back into a hole in the valence band.

To summarize, a piece of intrinsic silicon at room temperature has, at any instant, a number of conduction-band (free) electrons that are unattached to any atom and are essentially drifting randomly throughout the material. Also, an equal number of holes are created in the valence band when these electrons jump into the conduction band. This is illustrated in Figure 5.

www.EngineeringBooksPdf.com

▶ **FIGURE 3**

Energy band diagram for a pure silicon crystal with unexcited atoms. There are no electrons in the conduction band.

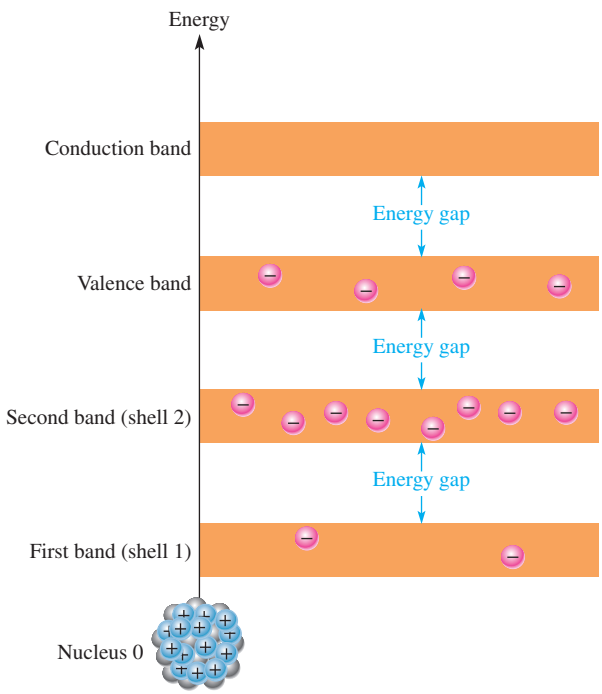

▶ **FIGURE 4**

Creation of electron-hole pairs in a silicon crystal. Electrons in the conduction band are free electrons.

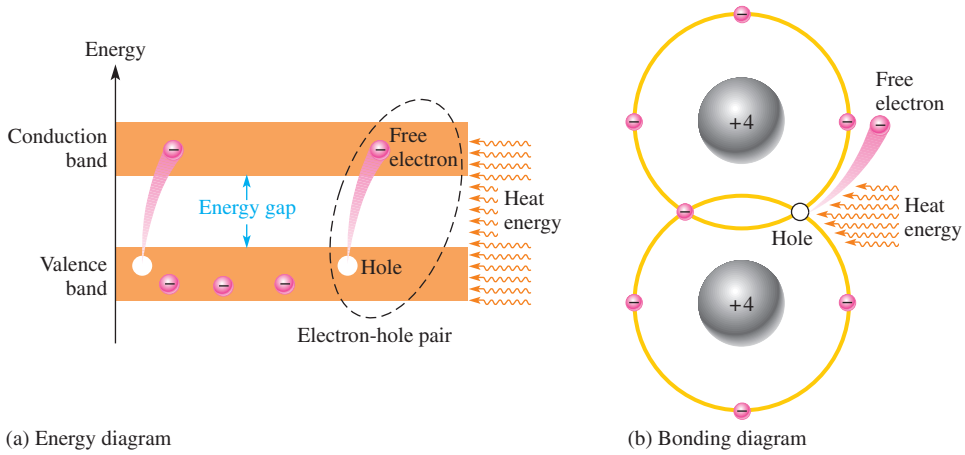

(a) Energy diagram (b) Bonding diagram

▶ **FIGURE 5**

Electron-hole pairs in a silicon crystal. Free electrons are being generated continuously while some recombine with holes.

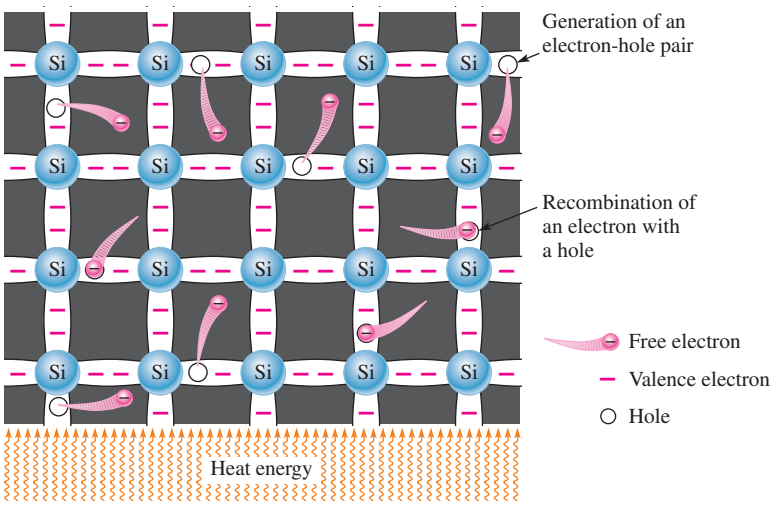

www.EngineeringBooksPdf.com

Electron and Hole Current

When a voltage is applied across a piece of silicon, as shown in Figure 6, the thermally generated free electrons in the conduction band, which are free to move randomly in the crystal structure, are now easily attracted toward the positive end. This movement of free electrons is one type of current in a semiconductive material and is called *electron current.*

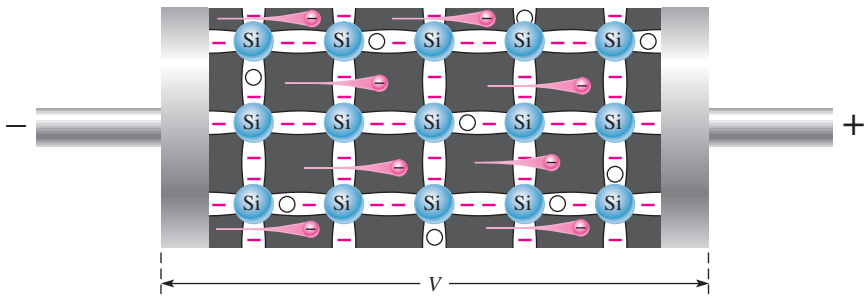

◀ FIGURE 6

Free electron current in intrinsic silicon is produced by the movement of thermally generated free electrons in the conduction band.

Another type of current occurs at the valence level, where the holes created by the free electrons exist. Electrons remaining in the valence band are still attached to their atoms and are not free to move randomly in the crystal structure. However, a valence electron can move into a nearby hole, with little change in its energy level, thus leaving another hole where it came from. The hole has effectively, although not physically, moved from one place to another in the crystal structure, as illustrated in Figure 7. This current is called *hole current.*

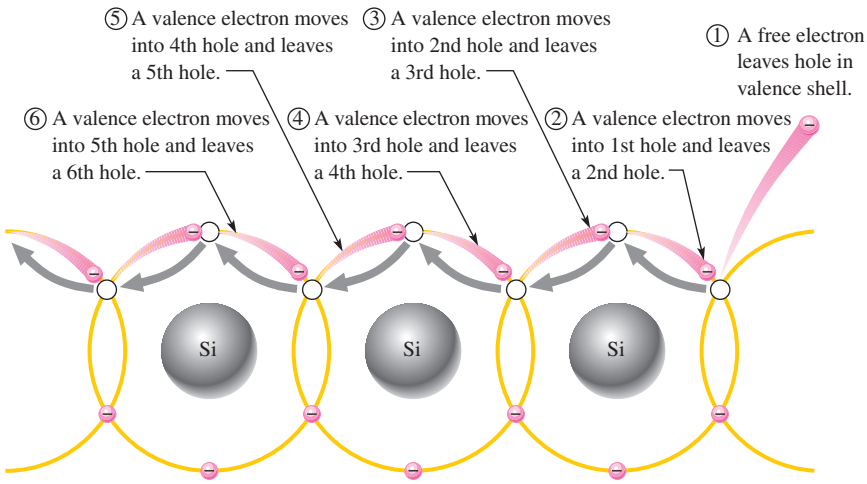

◀ FIGURE 7

Hole current in intrinsic silicon.

When a valence electron moves left to right to fill a hole while leaving another hole behind, the hole has effectively moved from right to left. Gray arrows indicate effective movement of a hole.

Comparison of Semiconductors to Conductors and Insulators

In an **intrinsic semiconductor**, there are relatively few free electrons, so semiconductors are not very useful in their intrinsic states. Pure semiconductive materials are neither insulators nor good conductors because current in a material depends directly on the number of free electrons.

A comparison of the energy bands in Figure 8 for insulators, semiconductors and conductors shows the essential differences among them regarding conduction. The energy gap for an insulator is so wide that hardly any electrons acquire enough energy to jump into the conduction band. The valence band and the conduction band in a conductor (such as copper) overlap so that there are always many conduction electrons, even without the application of external energy. A semiconductor, as Figure 8(b) shows, has an energy gap that is much narrower than that in an insulator.

www.EngineeringBooksPdf.com

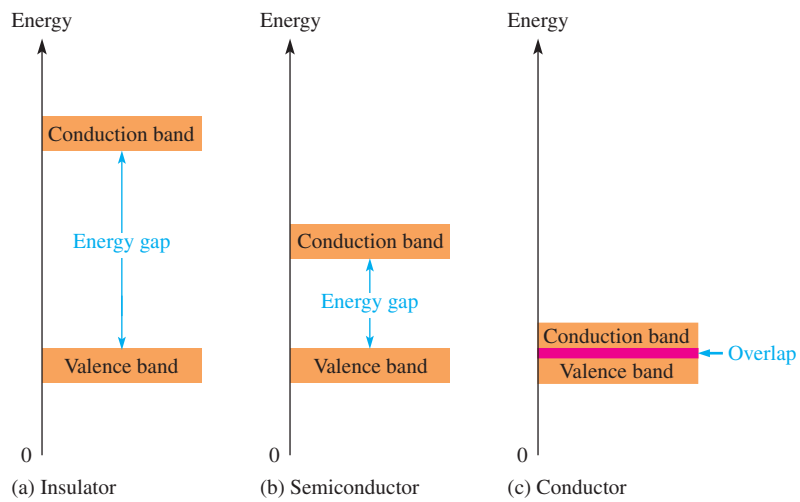

▲ FIGURE 8

Energy diagrams for the three types of materials.

N-Type and *P*-Type Semiconductors

Semiconductive materials do not conduct current well and are of little value in their intrinsic state. This is because of the limited number of free electrons in the conduction band and holes in the valence band. Intrinsic silicon must be modified by increasing the free electrons and holes to increase its conductivity and make it useful in electronic devices. This is done by adding impurities to the intrinsic material as you will learn in this section. Two types of extrinsic (impure) semiconductive materials, *n*-type and *p*-type, are the key building blocks for all types of electronic devices.

Doping The conductivities of silicon can be drastically increased and controlled by the addition of impurities to the intrinsic (pure) semiconductive material. This process, called **doping**, increases the number of current carriers (electrons or holes). The two categories of impurities are *n-type* and *p-type.*

N-Type Semiconductor To increase the number of conduction-band electrons in intrinsic silicon, **pentavalent** impurity atoms are added. These are atoms with five valence electrons, such as arsenic (As), phosphorus (P), and antimony (Sb) and are known as donor atoms because they provide an extra electron to the semiconductor's crystal structure.

As illustrated in Figure 9(a), each pentavalent atom (antimony, in this case) forms covalent bonds with four adjacent silicon atoms. Four of the antimony atom's valence electrons are used to form the covalent bonds with silicon atoms, leaving one extra electron. This extra electron becomes a conduction electron because it is not attached to any atom. The number of conduction electrons can be controlled by the number of impurity atoms added to the silicon.

Since most of the current carriers are electrons, silicon doped in this way is an *n*-type semiconductor (the *n* stands for the negative charge on an electron). The electrons are called the **majority carriers** in *n*-type material. Although the majority of current carriers in *n*-type material are electrons, there are some holes. These holes are *not* produced by the addition of the pentavalent impurity atoms. Holes in an *n*-type material are called **minority carriers**.

P-Type Semiconductor To increase the number of holes in intrinsic silicon, **trivalent** impurity atoms are added. These are atoms with three valence electrons, such as aluminum (Al), boron (B), and gallium (Ga) and are known as acceptor atoms because they leave a hole in the semiconductor's crystal structure.

www.EngineeringBooksPdf.com

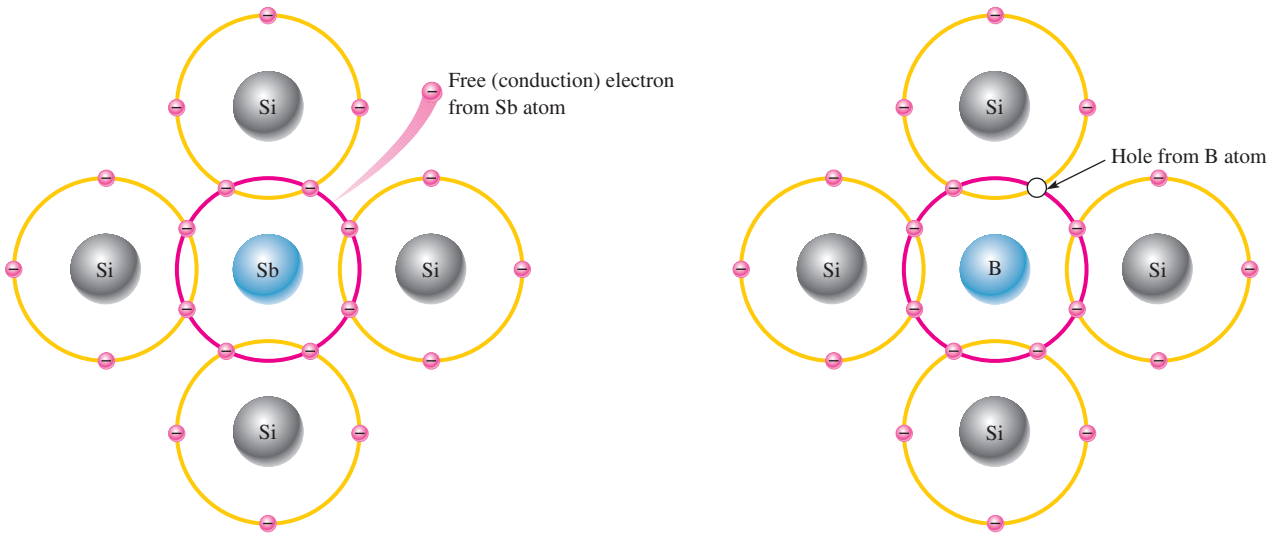

(a) Pentavalent impurity atom in a silicon crystal. An antimony (Sb) impurity atom is shown in the center. The extra electron from the Sb atom becomes a free electron.

(b) Trivalent impurity atom in a silicon crystal. A boron (B) impurity atom is shown in the center.

▲ **FIGURE 9**

Impurity atoms.

As illustrated in Figure 9(b), each trivalent atom (boron, in this case) forms covalent bonds with four adjacent silicon atoms. All three of the boron atom's valence electrons are used in the covalent bonds; and, since four electrons are required, a hole is formed with each trivalent atom. The number of holes can be controlled by the amount of trivalent impurity added to the silicon.

Since most of the current carriers are holes, silicon doped with trivalent atoms is a *p*-type semiconductor. Holes can be thought of as positive charges. The holes are the majority carriers in *p*-type material. Although the majority of current carriers in *p*-type material are holes, there are also a few free electrons that are created when electron-hole pairs are thermally generated. These few free electrons are *not* produced by the addition of trivalent impurity atoms. Electrons in *p*-type material are the minority carriers.

SECTION 1 CHECKUP

Answers are at the end of the chapter.

1. How are covalent bonds formed?
2. What is meant by the term *intrinsic*?
3. What is a crystal?
4. Effectively, how many valence electrons are there in each atom within a silicon crystal?
5. In the atomic structure of a semiconductor, within which energy band do free electrons exist? Within which energy band do valence electrons exist?
6. How are holes created in an intrinsic semiconductor?
7. Why is current established more easily in a semiconductor than in an insulator?
8. How is an *n*-type semiconductor formed?
9. How is a *p*-type semiconductor formed?
10. What are majority carriers?

www.EngineeringBooksPdf.com

2 THE DIODE

If you take a block of silicon and dope half of it with a trivalent impurity and the other half with a pentavalent impurity, a boundary called the ***pn* junction** is formed between the resulting *p*-type and *n*-type portions of a semiconduction diode.

After completing this section, you should be able to

- **Describe the characteristics and biasing of a diode**
  - Define *pn* junction
  - Discuss the depletion region in a diode
  - Define *barrier potential*
  - Discuss forward bias
  - Discuss reverse bias
  - Define *reverse breakdown*

There is no movement of electrons (current) through a diode at equilibrium. The primary usefulness of the diode is its ability to allow current in only one direction and to prevent current in the other direction as determined by the bias. In electronics, **bias** refers to the use of a dc voltage to establish certain operating conditions for an electronic device. There are two practical bias conditions for a diode: forward and reverse. Either of these conditions is created by application of a sufficient external voltage of the proper polarity across the *pn* junction.

Formation of the Depletion Region in a Diode

A **diode** consists of an *n* region and a *p* region separated by a *pn* junction, as illustrated in Figure 10. The *n* region has many conduction electrons, and the *p* region has many holes. With no external voltage, the conduction electrons in the *n* region are randomly drifting in all

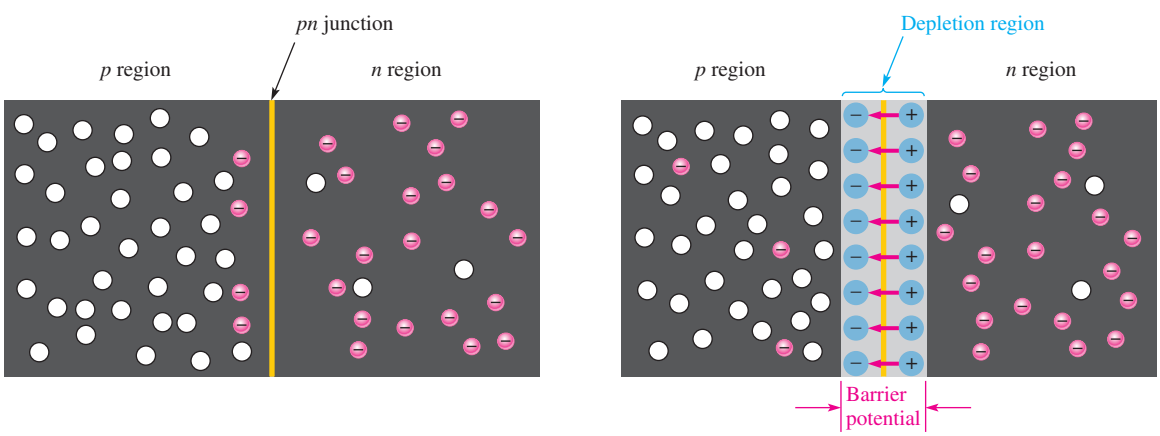

(a) At the instant of junction formation, free electrons in the *n* region near the *pn* junction begin to diffuse across the junction and fall into holes near the junction in the *p* region.

(b) For every electron that diffuses across the junction and combines with a hole, a positive charge is left in the *n* region and a negative charge is created in the *p* region, forming a barrier potential. This action continues until the voltage of the barrier repels further diffusion.

▲ FIGURE 10

Formation of the depletion region in a diode.

www.EngineeringBooksPdf.com

directions. At the instant of junction formation, some of the electrons near the junction drift across into the *p* region and recombine with holes near the junction, as shown in part (a).

For each electron that crosses the junction and recombines with a hole, a pentavalent atom is left with a net positive charge in the *n* region near the junction, making it a positive ion. Also, when the electron recombines with a hole in the *p* region, a trivalent atom acquires net negative charge, making it a negative ion.

As a result of this recombination process, a large number of positive and negative ions builds up near the *pn* junction. As this buildup occurs, the electrons in the *n* region must overcome both the attraction of the positive ions and the repulsion of the negative ions in order to migrate into the *p* region. Thus, as the ion layers build up, the area on both sides of the junction becomes essentially depleted of any conduction electrons or holes and is known as the *depletion region.* This condition is illustrated in Figure 10(b). When an equilibrium condition is reached, the depletion region has widened to a point where no more electrons can cross the *pn* junction.

The existence of the positive and negative ions on opposite sides of the *pn* junction creates a barrier potential across the depletion region, as indicated in Figure 10(b). The **barrier potential**, V_B, is the amount of voltage required to move electrons through the depletion region. At 25°C, it is approximately 0.7 V for silicon and 0.3 V for germanium. As the junction temperature increases, the barrier potential decreases, and vice versa.

Biasing a Diode

Forward Bias **Forward bias** is the condition that permits current through a diode. Figure 11 shows a dc voltage connected in a direction to forward-bias the *pn* junction. Notice that the negative terminal of the V_{BIAS} source is connected to the *n* region, and the positive terminal is connected to the *p* region.

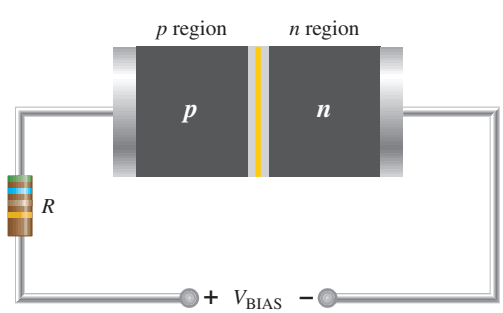

◀ **FIGURE 11**

Forward-bias connection. The resistor limits the forward current in order to prevent damage to the diode.

A discussion of the basic operation of forward bias follows: The negative terminal of the bias-voltage source pushes the conduction-band electrons in the *n* region toward the *pn* junction, while the positive terminal pushes the holes in the *p* region also toward the *pn* junction. Recall that like charges repel each other.

When it overcomes the barrier potential (V_B), the external voltage source provides the *n*-region electrons with enough energy to penetrate the depletion region and move through the junction, where they combine with the *p*-region holes. As electrons leave the *n*-region, more flow in from the negative terminal of the bias-voltage source. Thus, current through the *n* region is formed by the movement of conduction electrons (majority carriers) toward the *pn* junction.

Once the conduction electrons enter the *p* region and combine with holes, they become valence electrons. Then they move as valence electrons from hole to hole toward the positive connection of the bias-voltage source. The movement of these valence electrons is the same as the movement of holes in the opposite direction. Thus, current in the *p* region is formed by the movement of holes (majority carriers) toward the *pn* junction. Figure 12 illustrates current in a forward-biased diode.

www.EngineeringBooksPdf.com

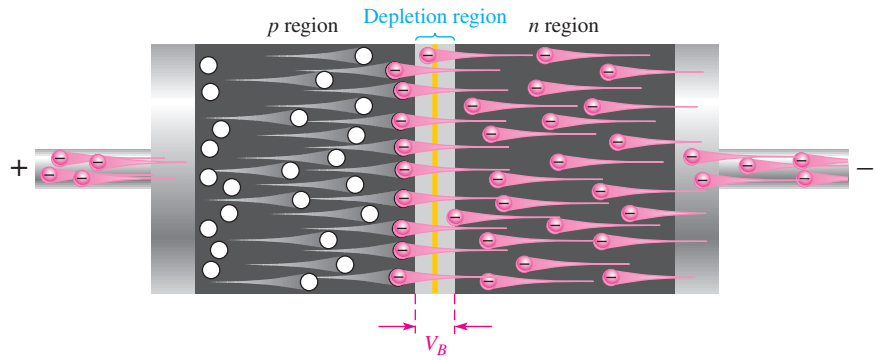

▲ FIGURE 12

Current in a forward-biased diode.

The effect of the barrier potential in the depletion region is to oppose forward bias. This is because the negative ions near the junction in the *p* region tend to prevent electrons from moving through the junction into the *p* region. You can think of the barrier potential effect as simulating a small battery connected in a direction to oppose the forward-bias voltage, as shown in Figure 13. The resistances R_p and R_n represent the dynamic resistances of the *p* and *n* materials.

▶ FIGURE 13

Barrier potential and dynamic resistance equivalent for a diode.

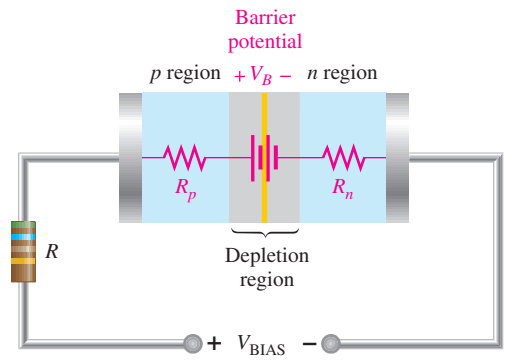

The external bias voltage must overcome the effect of the barrier potential before the diode conducts, as illustrated in Figure 14. Conduction occurs at approximately 0.7 V for silicon. Once the diode is conducting in the forward direction, the voltage drop across it remains at approximately the barrier potential and changes very little with changes in forward current (I_F), as illustrated in Figure 14.

Reverse Bias **Reverse bias** is the condition that prevents current through the diode. Figure 15(a) shows a dc voltage source connected to reverse-bias the diode. Notice that the negative terminal of the V_{BIAS} source is connected to the *p* region and the positive terminal is connected to the *n* region.

A discussion of the basic operation for reverse bias follows: The negative terminal of the bias-voltage source attracts holes in the *p* region away from the *pn* junction, while the positive terminal also attracts electrons away from the *pn* junction. As electrons and holes move away from the *pn* junction, the depletion region widens; more positive ions are created in the *n* region, and more negative ions are created in the *p* region, as shown in Figure 15(b). The initial flow of majority carriers away from the *pn* junction is called *transient current* and lasts only for a very short time upon application of reverse bias.

The depletion region widens until the potential difference across it equals the external bias voltage. At this point, the holes and electrons stop moving away from the *pn* junction, and majority current ceases, as indicated in Figure 15(c).

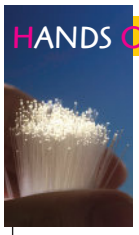

HANDS ON TIP

A special type of diode that makes use of the depletion-region capacitance is the *varactor*. It is used as a variable capacitor in which the capacitance is controlled by the reverse-bias voltage. By increasing or decreasing the reverse voltage, you can increase or decrease the capacitance.

www.EngineeringBooksPdf.com

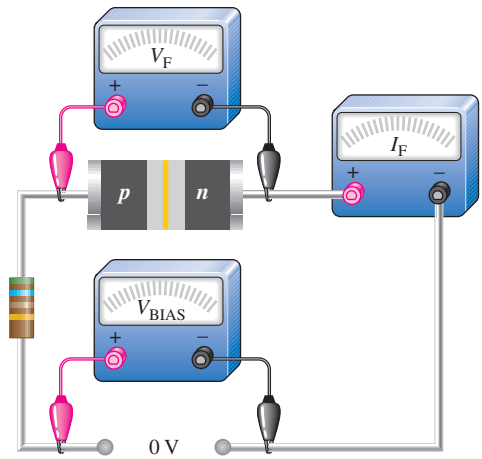

(a) No bias voltage. The *pn* junction of the diode is at equilibrium.

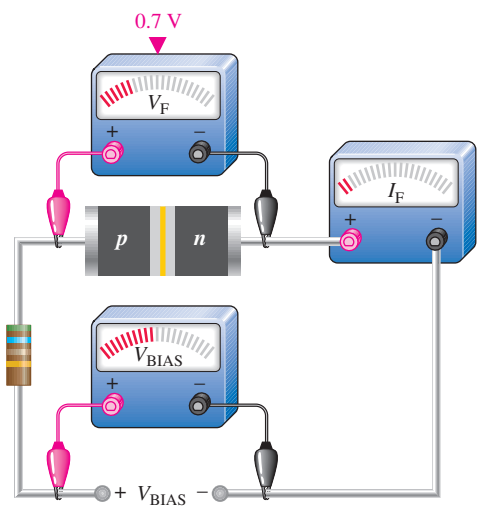

(b) Small forward-bias voltage ($V_F < 0.7$ V), very small forward current.

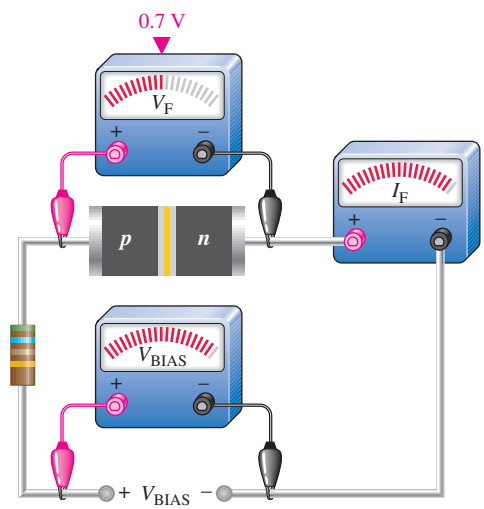

(c) Forward voltage reaches and remains at approximately 0.7 V. Forward current continues to increase as the bias voltage is increased.

▲ **FIGURE 14**

Illustration of diode operation under forward-bias conditions.

When the diode is reverse-biased, the depletion region effectively acts as an insulator between the layers of oppositely charged ions, forming an effective capacitance. Since the depletion region widens with increased reverse-biased voltage, the capacitance decreases, and vice versa. This internal capacitance is called the *depletion-region capacitance.*

As you have learned, majority current very quickly becomes zero when reverse bias is applied. There is, however, a very small current produced by minority carriers during reverse bias. This current is typically in the μA or nA range. A relatively small number of thermally produced electron-hole pairs exist in the depletion region. Under the influence of the external voltage, some electrons manage to diffuse across the *pn* junction before recombination. This process establishes a small minority carrier current throughout the material.

The reverse current is dependent primarily on the junction temperature and not on the amount of reverse-biased voltage. A temperature increase causes an increase in reverse current.

www.EngineeringBooksPdf.com

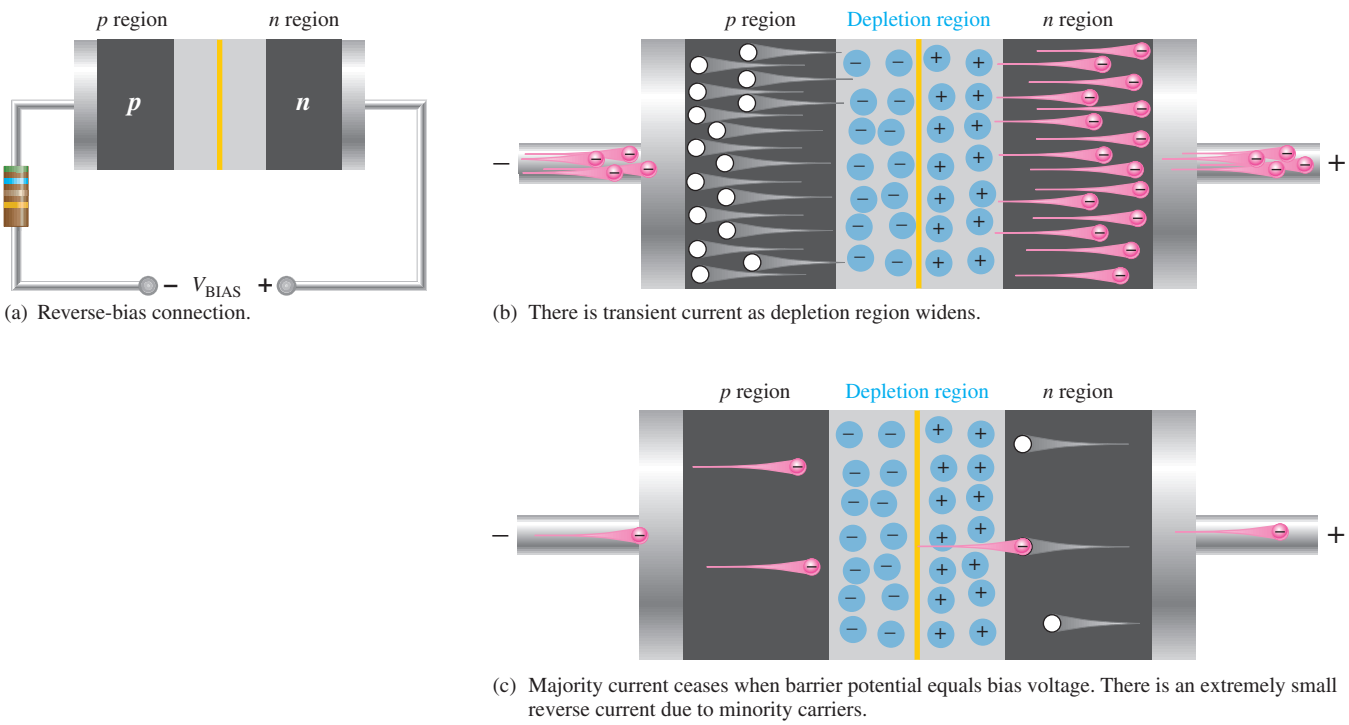

(a) Reverse-bias connection.

(b) There is transient current as depletion region widens.

(c) Majority current ceases when barrier potential equals bias voltage. There is an extremely small reverse current due to minority carriers.

▲ **FIGURE 15**

Illustration of reverse bias.

Reverse Breakdown If the external reverse-bias voltage is increased to a large enough value, **reverse breakdown** occurs. The following describes what happens: Assume that one minority conduction-band electron acquires enough energy from the external source to accelerate it toward the positive end of the diode. During its travel, it collides with an atom and imparts enough energy to knock a valence electron into the conduction band. There are now two conduction-band electrons. Each will collide with an atom, knocking two more valence electrons into the conduction band. There are now four conduction-band electrons which, in turn, knock four more into the conduction band. This rapid multiplication of conduction-band electrons, known as an *avalanche effect,* results in a rapid buildup of reverse current.

Most diodes normally are not operated in reverse breakdown and can be damaged if they are. However, a particular type of diode known as a zener diode (discussed in Section 6) is specially designed for reverse-breakdown operation.

SECTION 2 CHECKUP

1. What is a *pn* junction?
2. When *p* and *n* regions are joined, a depletion region forms. Describe the characteristics of the depletion region.
3. The barrier potential for silicon is greater than for germanium. (True or False)
4. What is the barrier potential for silicon at 25°C?
5. Name the two bias conditions.
6. Which bias condition produces majority carrier current?
7. Which bias condition produces a widening of the depletion region?
8. Minority carriers produce the current during reverse breakdown. (True or False)

www.EngineeringBooksPdf.com

3 DIODE CHARACTERISTICS

As you learned in the last section, a diode is a semiconductive device made with a single *pn* junction. A diode conducts current when it is forward-biased when the bias voltage exceeds the barrier potential. A diode prevents current when it is reverse-biased at less than the breakdown voltage.

After completing this section, you should be able to

- **Describe the basic diode characteristics**
  - Explain the diode *V-I* characteristic curve
  - Recognize the standard diode symbol
  - Test a diode with an ohmmeter
  - Describe three diode approximations

Diode Characteristic Curve

Figure 16 is a graph of diode voltage versus current, known as a *V-I* characteristic curve. The upper right quadrant of the graph represents the forward-biased condition. As you can see, there is very little forward current (I_F) for forward voltages (V_F) below the barrier potential. As the forward voltage approaches the value of the barrier potential, the current begins to increase. Once the forward voltage reaches the barrier potential, the current increases drastically and must be limited by a series resistor. *The voltage across the forward-biased diode remains approximately equal to the barrier potential.*

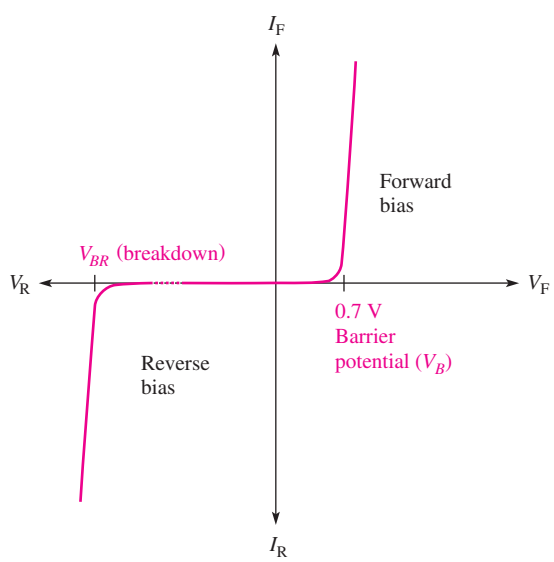

▲ FIGURE 16

General diode *V-I* characteristic curve.

The lower left quadrant of the graph represents the reverse-biased condition. As the reverse voltage (V_R) increases to the left, the current remains near zero until the breakdown voltage (V_{BR}) is reached. When breakdown occurs, there is a large reverse current which, if not limited,

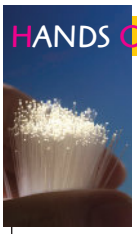

HANDS ON TIP

The diode forward *V-I* characteristic curve can be plotted on the oscilloscope using the circuit shown below. Channel 1 senses the voltage across the diode and channel 2 senses a signal that is proportional to the current. The scope must be in the *X-Y* mode. The signal generator provides a 5 Vpp sawtooth or triangular waveform at 50 Hz, and its ground must not be the same as the scope ground. Channel 2 (the Y channel) must be inverted for the displayed curve to be properly oriented.

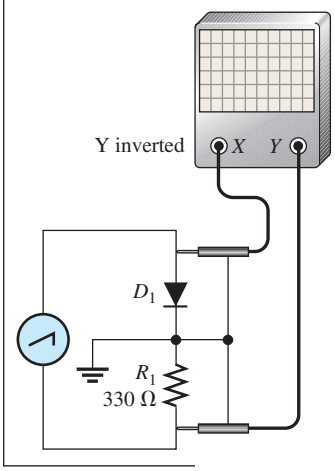

www.EngineeringBooksPdf.com

can destroy the diode. Typically, the breakdown voltage is greater than 50 V for most rectifier diodes. Remember that most diodes should not be operated in reverse breakdown.

Diode Symbol

Figure 17(a) shows the basic diode structure and the standard schematic symbol for a general-purpose diode. The "arrowhead" in the symbol points in the direction opposite the electron flow. The two terminals of the diode are the anode (A) and cathode (K). The **anode** is the *p* region and the **cathode** is the *n* region.

When the anode is positive with respect to the cathode, the diode is forward-biased and current (I_F) is from cathode to anode, as shown in Figure 17(b). Remember that when the diode is forward-biased, the barrier potential, V_B, always appears between the anode and cathode, as indicated in the figure. When the anode is negative with respect to the cathode, the diode is reverse-biased, as shown in Figure 17(c) and there is no current. A resistor is not necessary in reverse bias but it is shown for consistency.

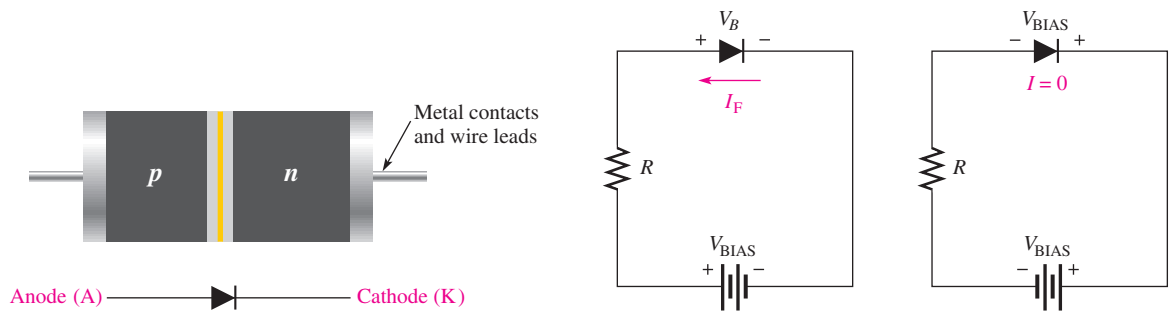

(a) Basic diode structure and symbol (b) Forward bias (c) Reverse bias

▲ **FIGURE 17**

Diode structure, schematic symbol, and bias circuits. V_{BIAS} is the bias voltage, and V_B is the barrier potential.

Some typical diodes and their terminal identifications are shown in Figure 18 to illustrate the variety of physical structures.

▶ **FIGURE 18**

Typical diode packages and terminal identification. A is anode and K is cathode.

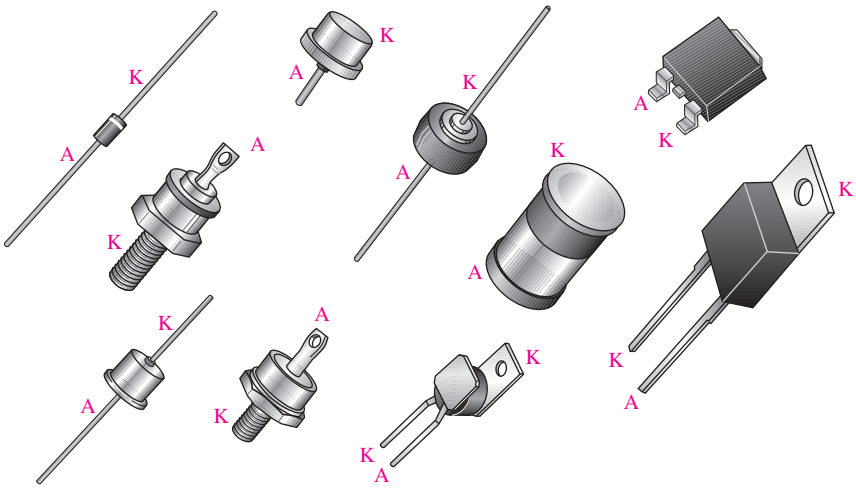

www.EngineeringBooksPdf.com

Diode Approximations

The Ideal Diode Model The simplest way to visualize diode operation is to think of it as a switch. When forward-biased, the diode ideally acts as a closed (on) switch; and when reverse-biased, it acts as an open (off) switch, as shown in Figure 19. The *V-I* characteristic curve for this model is also shown in part (c). Note that the forward voltage (V_F) and the reverse current (I_R) are always zero in the ideal case.

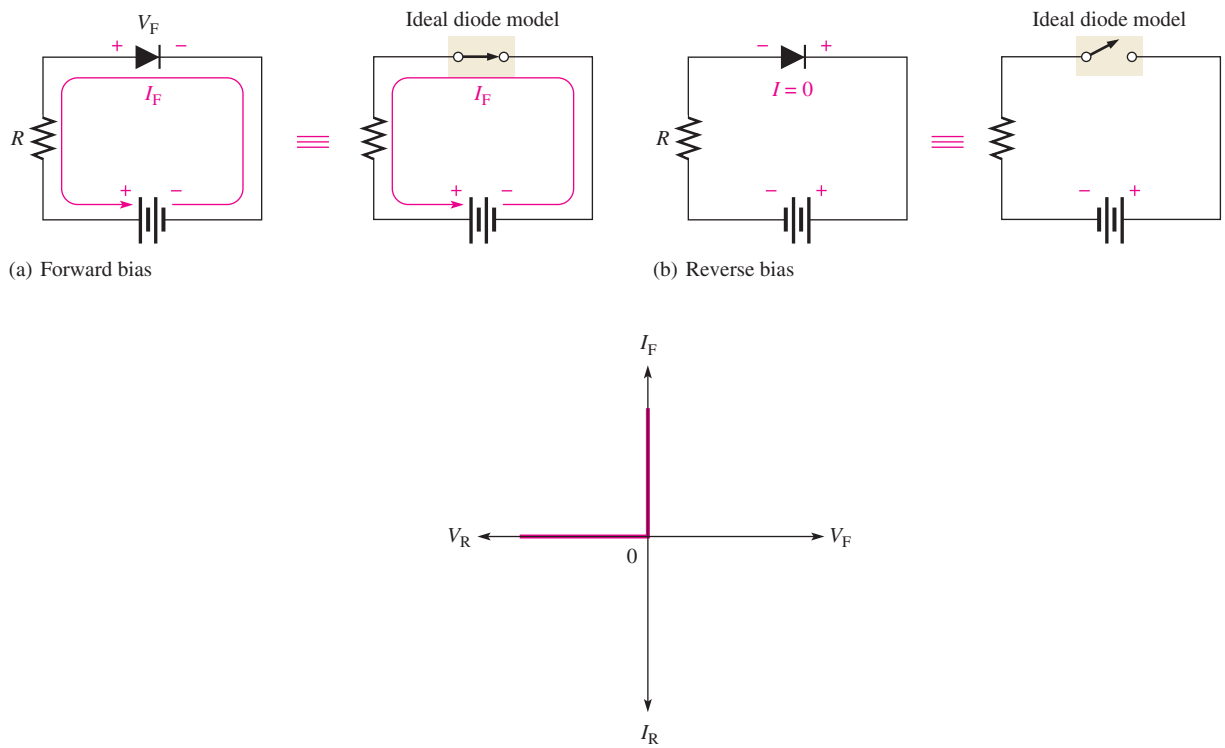

(c) Ideal *V-I* characteristic curve (red)

▲ **FIGURE 19**

Ideal model of the diode as a switch.

This ideal model, of course, neglects the effect of the barrier potential, the internal resistances, and other parameters. You may want to use the ideal model when you are troubleshooting or trying to figure out the operation of a circuit and are not concerned with more exact values of voltage or current.

The Practical Diode Model The next higher level of accuracy includes the barrier potential in the diode model. In this approximation, the forward-biased diode is represented as a closed switch in series with a small "battery" equal to the barrier potential V_B (0.7 V for Si), as shown in Figure 20(a). The positive end of the battery is toward the anode. *Keep in mind that the barrier potential only has the effect of a battery when forward bias is applied because the forward bias voltage, V_{BIAS}, must overcome the barrier potential before the diode begins to conduct current.* The reverse-biased diode is represented by an open switch, as in the ideal case, because the barrier potential does not affect reverse bias, as shown in Figure 20(b). The *V-I* characteristic curve for this model is shown in Figure 20(c).

www.EngineeringBooksPdf.com

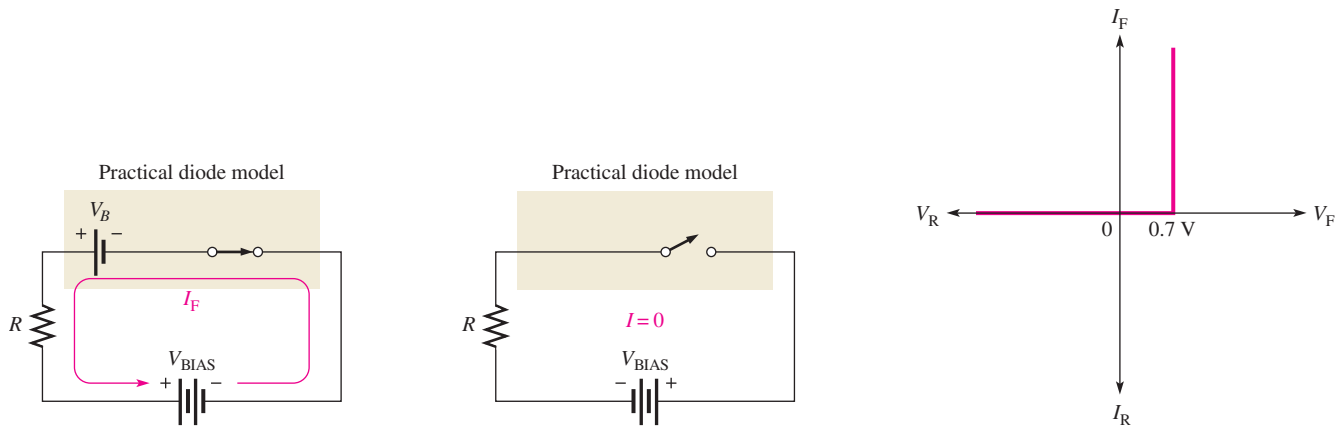

(a) Forward bias (b) Reverse bias (c) *V-I* characteristic curve

▲ **FIGURE 20**

The practical model of a diode.

The Complete Diode Model One more level of accuracy will be considered at this point. Figure 21(a) shows the forward-biased diode model with both the barrier potential and the low forward dynamic resistance. Figure 21(b) shows how the high internal reverse resistance affects the reverse-biased model. The characteristic curve is shown in Figure 21(c).

▶ **FIGURE 21**

The complete diode model includes barrier potential, forward resistance, and reverse resistance.

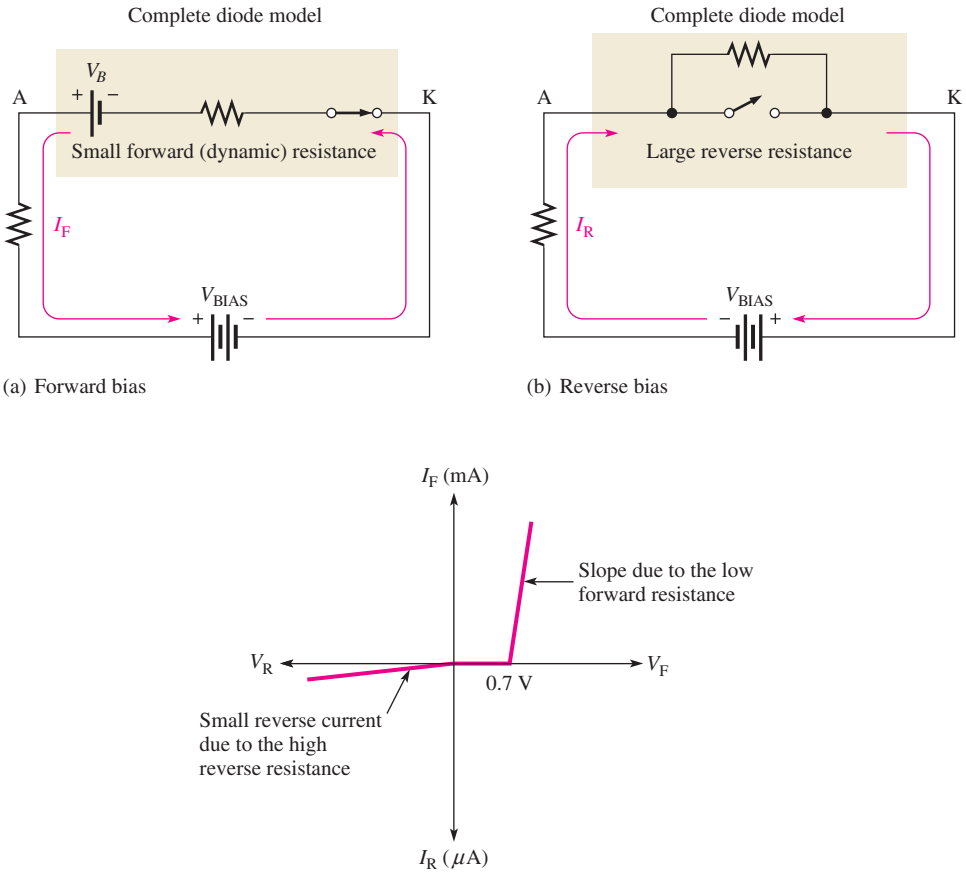

(a) Forward bias (b) Reverse bias

(c) *V-I* characteristic curve

www.EngineeringBooksPdf.com

Other parameters such as depletion-region capacitance and breakdown voltage become important only under certain operating conditions and will be considered only where appropriate.

SECTION 3 CHECKUP

1. Draw a rectifier diode symbol and label the terminals.
2. For a normal diode, the forward resistance is quite low and the reverse resistance is very high. (True or False)
3. An open switch ideally represents a _____-biased diode. A closed switch ideally represents a _____-biased diode.
4. How does the practical model of a diode differ from the ideal model?

4 DIODE RECTIFIERS

Because of their ability to conduct current in one direction and block current in the other direction, diodes are used in circuits called **rectifiers** that convert ac voltage into dc voltage. Rectifiers are found in all dc power supplies that operate from an ac voltage source.

After completing this section, you should be able to

- **Analyze the operation of a half-wave rectifier and a full-wave rectifier**
  - Describe a basic dc power supply
  - Explain the processes of half-wave and full-wave rectification
  - Describe how the diode functions in a rectifier
  - Determine the average value of a half-wave rectified voltage
  - Determine the average value of a full-wave rectified voltage
  - Define *peak inverse voltage (PIV)*

The Half-Wave Rectifier

Figure 22 illustrates the process called *half-wave rectification.* In part (a), a diode is connected to an ac source that provides the input voltage, V_{in}, and to a load resistor, R_L, forming a **half-wave rectifier**. Keep in mind that all ground symbols represent the same point electrically. Let's examine what happens during one cycle of the input voltage using the ideal model for the diode. When the sinusoidal input voltage goes positive, the diode is forward-biased and conducts current through the load resistor, as shown in part (b). The current produces an output voltage across the load, which has the same shape as the positive half-cycle of the input voltage.

When the input voltage goes negative during the second half of its cycle, the diode is reverse-biased. There is no current, so the voltage across the load resistor is zero, as shown in Figure 22(c). The net result is that only the positive half-cycles of the ac input voltage appear across the load. Since the output does not change polarity, it is a pulsating dc voltage, as shown in part (d).

Average Value of the Half-Wave Rectified Output Voltage The average value of a half-wave rectified output voltage is the value you would measure on a dc voltmeter. It can be calculated with the following equation where $V_{p(out)}$ is the peak value of the half-wave rectified output voltage:

$$V_{AVG} = \frac{V_{p(out)}}{\pi} \qquad \text{Equation 1}$$

www.EngineeringBooksPdf.com

▶ **FIGURE 22**

Operation of a half-wave rectifier.

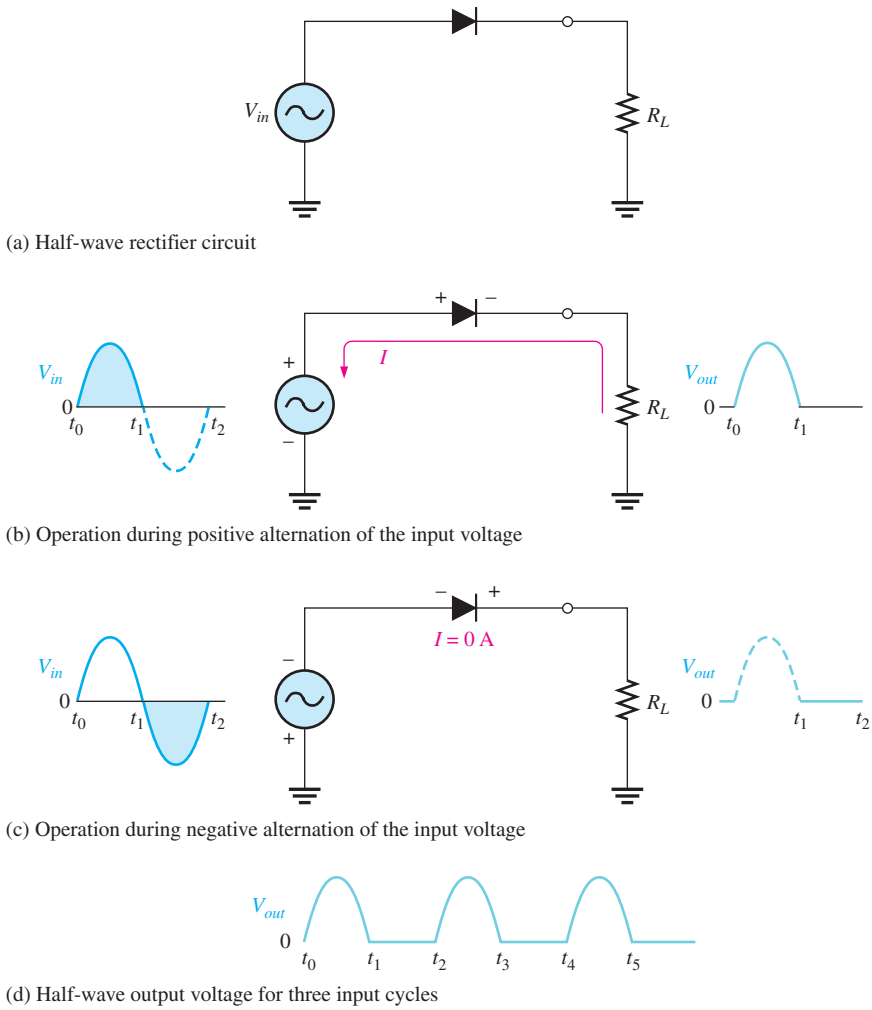

Figure 23 shows the half-wave voltage with its average value indicated by the red dashed line.

▶ **FIGURE 23**

Average value of the half-wave rectified signal.

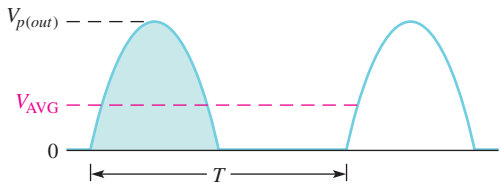

EXAMPLE 1

What is the average (dc) value of the half-wave rectified output voltage waveform in Figure 24?

▶ **FIGURE 24**

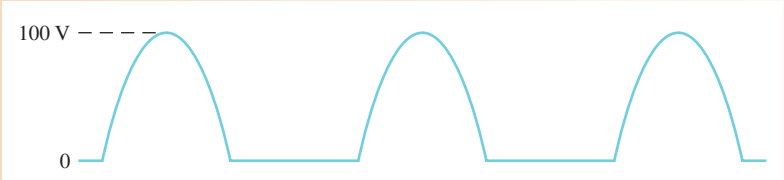

www.EngineeringBooksPdf.com

Solution

$$V_{AVG} = \frac{V_{p(out)}}{\pi} = \frac{100\text{ V}}{\pi} = \mathbf{31.8\ V}$$

*Related Problem** Determine the average value of the half-wave rectified output voltage if its peak amplitude is 12 V.

*Answers are at the end of the chapter.

Effect of Diode Barrier Potential on Half-Wave Rectifier Output Voltage In the previous discussion, the diode was considered ideal. When the diode barrier potential is taken into account as in the practical model discussed in Section 3, here is what happens: During the positive half-cycle, the input voltage must overcome the barrier potential before the diode becomes forward-biased. This results in a half-wave output voltage with a peak value that is 0.7 V less than the peak value of the input voltage, as shown in Figure 25. The expression for peak output voltage is

$$V_{p(out)} = V_{P(in)} - 0.7\text{ V} \qquad \text{Equation 2}$$

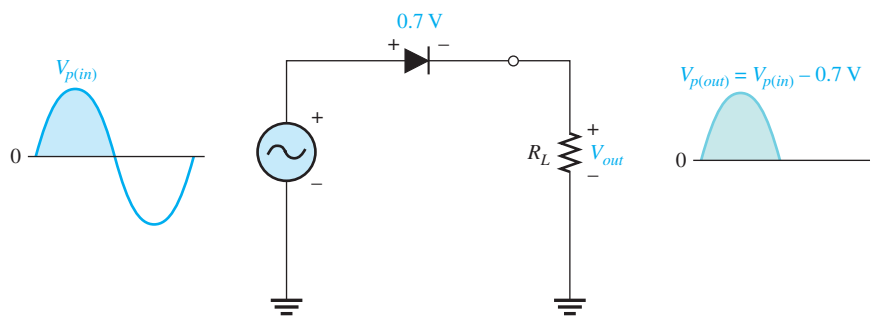

FIGURE 25

Effect of barrier potential on half-wave rectified output voltage.

When you work with diode circuits, it is often practical to neglect the effect of barrier potential when the peak value of the applied voltage is much greater (at least ten times) than the barrier potential.

EXAMPLE 2

Determine the peak output voltage and the average value of the output voltage of the rectifier in Figure 26 for the indicated input voltage.

FIGURE 26

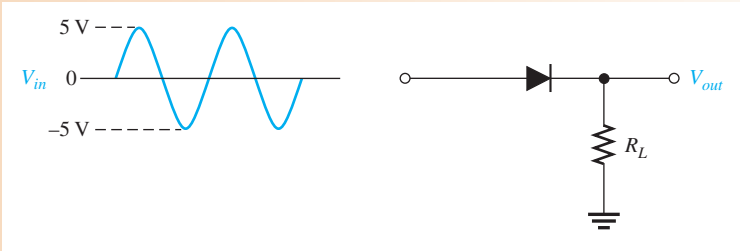

Solution

$$V_{p(out)} = V_{p(in)} - 0.7\text{ V} = 5\text{ V} - 0.7\text{ V} = \mathbf{4.3\ V}$$

$$V_{AVG} = \frac{V_{p(out)}}{\pi} = \frac{4.3\text{ V}}{\pi} = \mathbf{1.37\ V}$$

Related Problem Determine the peak output voltage for the rectifier in Figure 26 if the peak input is 3 V.

www.EngineeringBooksPdf.com

Peak Inverse Voltage (PIV) The maximum value of reverse voltage, sometimes designated as **PIV** (peak inverse voltage), occurs at the peak of each negative alternation of the input cycle when the diode is reverse-biased. This condition is illustrated in Figure 27. The PIV equals the peak value of the input voltage, and the diode must be capable of withstanding this amount of repetitive reverse voltage.

▶ FIGURE 27

The PIV occurs at the peak of each half-cycle of the input voltage when the diode is reverse-biased. In this circuit, the PIV occurs at the time (t_p) of the peak of each negative half-cycle.

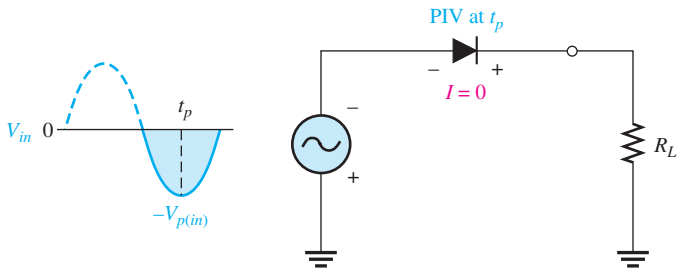

The Full-Wave Rectifier

The difference between full-wave and half-wave rectification is that a **full-wave rectifier** allows unidirectional current to the load during the entire input cycle and the half-wave rectifier allows this only during one-half of the cycle. The result of full-wave rectification is a dc output voltage that pulsates every half-cycle of the input, as shown in Figure 28.

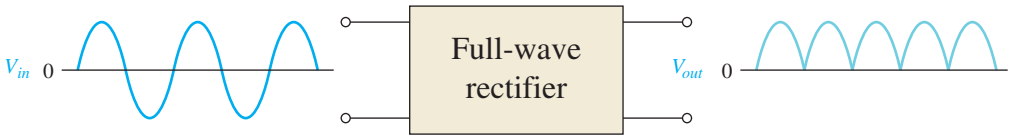

▲ FIGURE 28

Full-wave rectification.

The average value for a full-wave rectified output voltage is twice that of the half-wave rectified output voltage, expressed as follows:

Equation 3

$$V_{AVG} = \frac{2V_{p(out)}}{\pi}$$

Since $2/\pi = 0.637$, you can calculate V_{AVG} as $0.637V_{p(out)}$.

EXAMPLE 3

Find the average value of the full-wave rectified output voltage in Figure 29.

▶ FIGURE 29

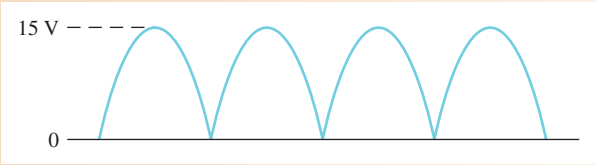

Solution

$$V_{AVG} = \frac{V_{p(out)}}{\pi} = \frac{2(15\text{ V})}{\pi} = \mathbf{9.55\ V}$$

Related Problem Find V_{AVG} for the full-wave rectified voltage if its peak is 155 V.

www.EngineeringBooksPdf.com

Center-Tapped Full-Wave Rectifier

The center-tapped (CT) full-wave rectifier uses two diodes connected to the secondary of a center-tapped transformer, as shown in Figure 30. The input signal is coupled through the transformer to the secondary. Half of the secondary voltage appears between the center tap and each end of the secondary winding as shown.

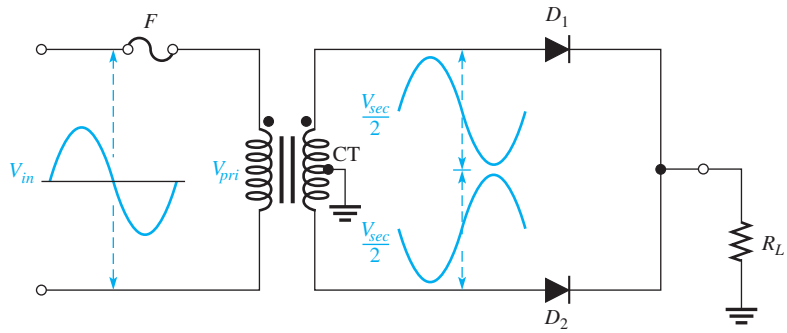

◀ **FIGURE 30**

A center-tapped full-wave rectifier. $V_{pri} = V_{in}$.

For a positive half-cycle of the input voltage, the polarities of the secondary voltages are as shown in Figure 31(a). This condition forward-biases the upper diode D_1 and reverse-biases the lower diode D_2. The current path is through D_1 and the load resistor R_L, as indicated. For a negative half-cycle of the input voltage, the voltage polarities on the secondary are as shown in Figure 31(b). This condition reverse-biases D_1 and forward-biases D_2. The current path is through D_2 and R_L, as indicated. Because the current during both the positive and the negative portions of the input cycle is in the same direction through the load, the output voltage developed across the load is a full-wave rectified dc voltage.

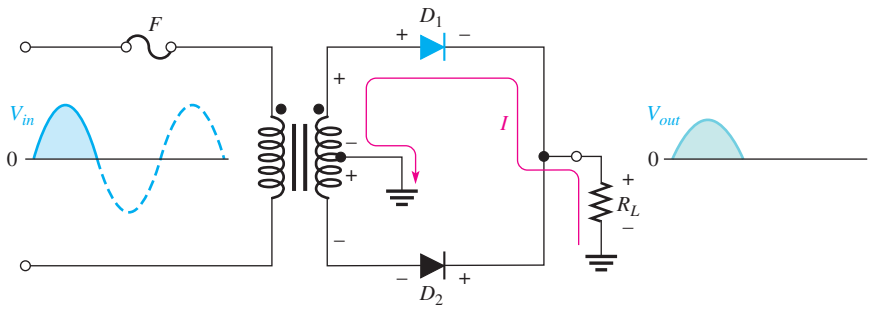

(a) During positive half-cycles, D_1 is forward-biased and D_2 is reverse-biased.

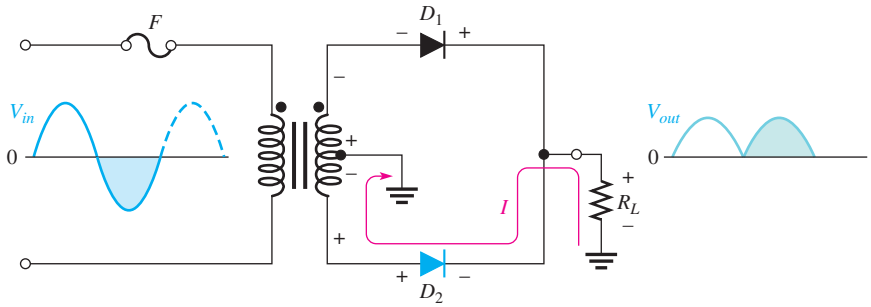

(b) During negative half-cycles, D_2 is forward-biased and D_1 is reverse-biased.

▲ **FIGURE 31**

Basic operation of a center-tapped full-wave rectifier. Note that the current through the load resistor is in the same direction during the entire input cycle.

HANDS ON TIP

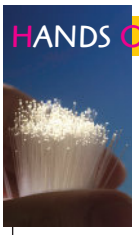

A diode is sometimes used to isolate two power sources such as in the case of a battery backup for a computer system. The power from the power supply is connected through a series diode to the power input point on the system. A battery backup system is connected to the same point through its own series diode. The battery backup is set for a slightly lower voltage so that it does not discharge the battery during normal operation. When a power failure occurs, the battery backup system takes over and the diodes prevent the two power sources from affecting each other.

www.EngineeringBooksPdf.com

Effect of the Turns Ratio on Full-Wave Output Voltage The output voltage is determined by the turns ratio, n, of the transformer. Most transformers will have the output voltage written on the transformer, but keep in mind that the reference for the full-wave rectifier is the center-tap, which means that the peak output voltage is one-half the peak secondary voltage. If you do not know the voltage, but do know the turns ratio of the transformer, you can calculate the peak output voltage for a full-wave rectifier from the following equation:

Equation 4

$$V_{p(out)} = \frac{nV_{p(in)}}{2}$$

Assuming the fuse drops no voltage, the primary voltage is the same as the input voltage. To obtain an output voltage with a peak value approximately equal to the input peak, use a step-up transformer with a turns ratio of 2. In this case, the total secondary voltage is twice the primary voltage, so the voltage across each half of the secondary is equal to the input (primary) voltage.

EXAMPLE 4

Frequently, you will need to specify a transformer based on an rms input voltage and a peak output voltage. Specify the turns ratio and type of transformer required for a full-wave rectifier if the input voltage is 120 V rms and the required output is 17 V peak?

Solution The input peak voltage is

$$V_{p(in)} = \frac{V_{rms(in)}}{0.707} = \frac{120\text{ V}}{0.707} = 170\text{ V}$$

Rearranging Equation 4 and substituting,

$$n = \frac{2V_{p(out)}}{V_{p(in)}} = \frac{2(17\text{ V})}{170\text{ V}} = \mathbf{0.200}$$

Thus, a **center-tapped step-down** transformer with a turns ratio of 0.2 is required.

Related Problem What is the peak output if the turns ratio is 0.15?

Peak Inverse Voltage (PIV) For simplicity, ideal diodes are used to illustrate PIV in a full-wave rectifier. Each diode in the full-wave rectifier is alternately forward-biased and then reverse-biased. The maximum reverse voltage that each diode must withstand is the peak value of the total secondary voltage ($V_{p(sec)}$), as illustrated in Figure 32. When the total secondary voltage $V_{p(sec)}$ has the polarity shown, the anode of D_1 is $+V_{p(sec)}/2$ and the anode of D_2 is $-V_{p(sec)}/2$. Since D_1 is forward-biased, its cathode is the same as its

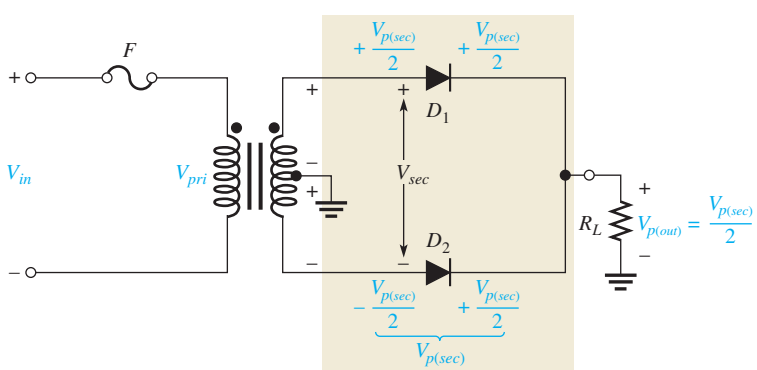

▶ **FIGURE 32**

Diode D_1 is shown forward-biased and D_2 is reverse-biased with PIV across it. The PIV across either diode is equal to the peak secondary voltage, which is twice the peak output voltage.

www.EngineeringBooksPdf.com

anode ($V_{p(sec)}/2$); this is also the voltage on the cathode of D_2. The total reverse voltage across D_2 is

$$V_{D2} = \frac{V_{p(sec)}}{2} - \frac{-V_{p(sec)}}{2} = V_{p(sec)}$$

Since $V_{p(out)} = V_{p(sec)}/2$,

$$V_{p(sec)} = 2V_{p(out)}$$

For either diode, the PIV in terms of the peak secondary voltage is

$$\text{PIV} = V_{p(sec)}$$

Combining the two preceding equations, the peak inverse voltage across either diode in the center-tapped full-wave rectifier in terms of the output voltage is

$$\mathbf{PIV = 2V_{p(out)}}$$ **Equation 5**

EXAMPLE 5

(a) For ideal diodes, show the voltage waveforms across the secondary winding and across R_L when a 120 V rms sine wave is applied to the primary winding in Figure 33.

(b) What minimum PIV rating must the diodes have?

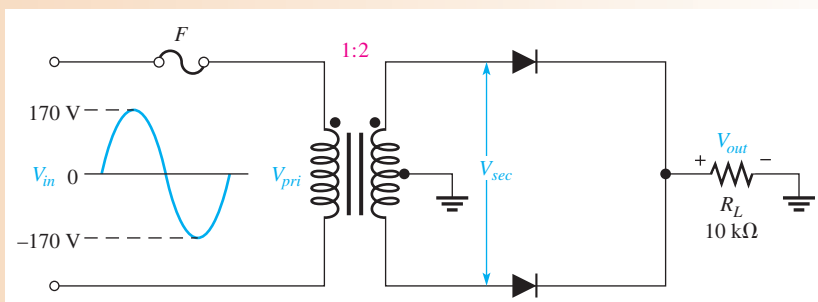

▲ FIGURE 33

Solution **(a)** The peak input voltage is

$$V_{in} = V_{p(pri)} = \frac{120\text{ V}}{0.707} = 170\text{ V}$$

Apply the secondary voltage equation to calculate the peak secondary voltage. The equation can be applied as long as both voltages are in the same form. To emphasize this, the letter p is added to the subscripts, indicating peak values.

$$V_{(p)sec} = nV_{(p)pri} = 2(170\text{ V}) = 340\text{ V}$$

Apply Equation 4 to calculate the peak output voltage.

$$V_{p(out)} = \frac{nV_{p(in)}}{2} = \frac{2(170\text{ V})}{2} = 170\text{ V}$$

Notice that $V_{(p)out}$ is referenced to ground, but $V_{(p)sec}$ is not. The waveforms are shown in Figure 34.

www.EngineeringBooksPdf.com

▶ FIGURE 34

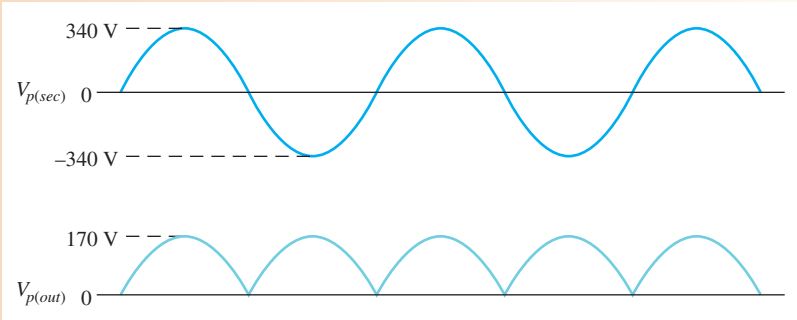

(b) Calculate the minimum PIV for each diode by applying Equation 5.

$$\text{PIV} = 2V_{p(out)} = 2(170\text{ V}) = \mathbf{340\ V}$$

Related Problem What diode PIV rating is required to handle a peak input of 185 V in Figure 33?

Open Multisim file E16-05; files are found at www.pearsonhighered.com/floyd/. Use the oscilloscope to display the output voltage waveform and compare to the output waveform in Figure 34.

Full-Wave Bridge Rectifier

The full-wave **bridge rectifier** uses four diodes, as shown in Figure 35. When the input cycle is positive as in part (a), diodes D_1 and D_2 are forward-biased and conduct current in the direction shown. A voltage is developed across R_L that looks like the positive half of the input cycle. During this time, diodes D_3 and D_4 are reverse-biased.

▶ FIGURE 35

Operation of full-wave bridge rectifier.

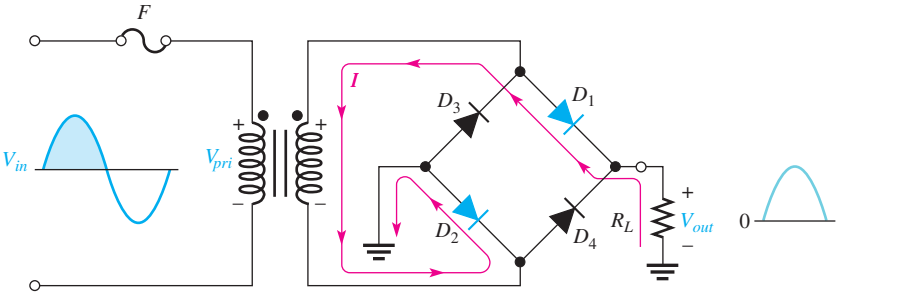

(a) During positive half-cycle of the input, D_1 and D_2 are forward-biased and conduct current. D_3 and D_4 are reverse-biased.

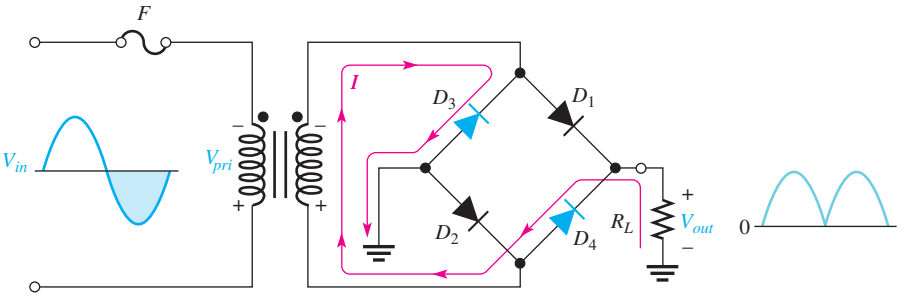

(b) During negative half-cycle of the input, D_3 and D_4 are forward-biased and conduct current. D_1 and D_2 are reverse-biased.

www.EngineeringBooksPdf.com

When the input cycle is negative, as in Figure 35(b), diodes D_3 and D_4 are forward-biased and conduct current in the same direction through R_L as during the positive half-cycle. During the negative half-cycle, D_1 and D_2 are reverse-biased. A full-wave rectified output voltage appears across R_L as a result of this action.

Bridge Output Voltage From transformer theory, the secondary voltage is equal to the primary voltage times the turns ratio as stated by the equation:

$$V_{sec} = nV_{pri}$$

This equation can be applied because both V_{sec} and V_{pri} are peak values. Because V_{in} is the same as the primary voltage (as long as the fuse is good), the peak secondary voltage can be expressed as $V_{p(sec)} = nV_{p(in)}$.

As you can see in Figure 35, two diodes are always in series with the load resistor during both the positive and the negative half-cycles. Neglecting the barrier potentials of the two diodes, the output voltage is a full-wave rectified voltage with a peak value equal to the peak secondary voltage.

$$V_{p(out)} = V_{p(sec)} \qquad \text{Equation 6}$$

Peak Inverse Voltage (PIV) Let's assume that the input is in its positive half-cycle when D_1 and D_2 are forward-biased and examine the reverse voltage across D_3 and D_4. In Figure 36, you can see that D_3 and D_4 have a peak inverse voltage equal to the peak secondary voltage, $V_{p(sec)}$. Since the peak secondary voltage is equal to the peak output voltage, the peak inverse voltage is

$$\text{PIV} = V_{p(out)} \qquad \text{Equation 7}$$

The PIV rating of the bridge diodes is half that required for the center-tapped configuration for the same output voltage.

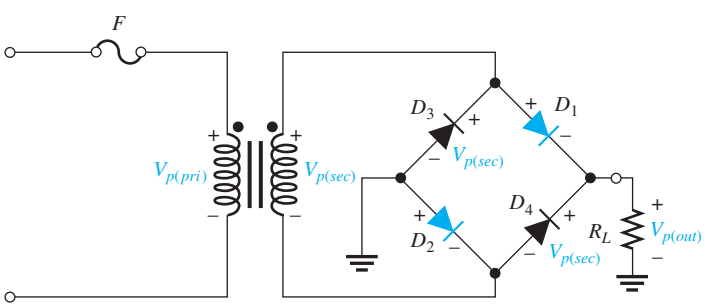

FIGURE 36

PIV across diodes D_3 and D_4 in a bridge rectifier during the positive half-cycle of the input voltage.

EXAMPLE 6

(a) Determine the peak output voltage for the bridge rectifier in Figure 37.

(b) What minimum PIV rating is required for the diodes?

FIGURE 37

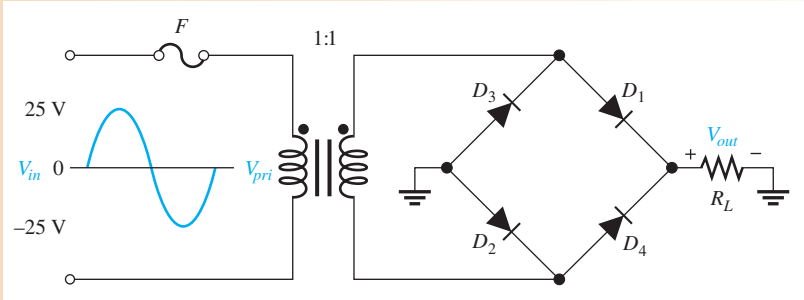

www.EngineeringBooksPdf.com

Solution **(a)** The peak output voltage is

$$V_{p(out)} = V_{p(sec)} = nV_{p(in)} = (1)25\text{ V} = \mathbf{25\ V}$$

(b) The PIV for each diode is

$$\text{PIV} = V_{p(out)} = \mathbf{25\ V}$$

Related Problem Determine the peak output voltage for the bridge rectifier in Figure 37 if the peak primary voltage is 170 V. What is the PIV rating for the diodes?

Open Multisim file E16-06. Measure the peak output voltage using the oscilloscope and compare to the calculated value.

SECTION 4 CHECKUP

1. At what point on the input cycle of a positive half-wave rectifier does the PIV occur?
2. For a half-wave rectifier, there is current through the load for approximately what percentage of the input cycle?
3. What is the average value of the output voltage shown in Figure 38?

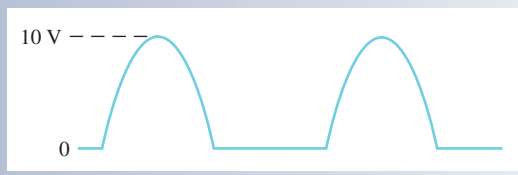

▶ FIGURE 38

4. What is the average value of a full-wave rectified voltage with a peak value of 60 V?
5. Which type of full-wave rectifier has the greater output voltage for the same input voltage and transformer turns ratio?
6. For a given output voltage, the PIV for bridge rectifier diodes is less than for center-tapped rectifier diodes. (True or False)

5 POWER SUPPLIES

Power supplies are an essential part of all electronic systems from the simplest to the most complex. A basic power supply consists of a rectifier, a filter, and a regulator. A power supply filter greatly reduces the fluctuations in the output voltage of a half-wave or full-wave rectifier and produces a nearly constant-level dc voltage. Filtering is necessary because electronic circuits require a constant source of dc voltage and current to provide power and biasing for proper operation. Filtering is accomplished using capacitors, as you will see in this section. **Voltage regulation** is usually accomplished with integrated circuit voltage regulators. A voltage regulator prevents changes in the filtered dc voltage due to variations in line voltage or load.

www.EngineeringBooksPdf.com

After completing this section, you should be able to

- **Describe the operation of power supplies**
  - Explain the operation of a capacitor-input filter
  - Determine the PIV for the diode in a filtered rectifier
  - Define *ripple voltage* and discuss its cause
  - Calculate the ripple factor
  - Discuss surge current in a capacitor-input filter
  - Discuss voltage regulation
  - Describe a typical IC regulator

The Basic DC Power Supply

The **dc power supply** converts the standard 120 V, 60 Hz ac available at wall outlets into a constant dc voltage. It is one of the most common electronic circuits that you will find. The dc voltage produced by a power supply is used to power all types of electronic circuits, such as television receivers, stereo systems, VCRs, computers, and laboratory equipment.

As you know, a rectifier can be either a half-wave rectifier or a full-wave rectifier. The rectifier converts the ac input voltage to a pulsating dc voltage, which is half-wave rectified, as shown in the block diagram in Figure 39(a), or full-wave rectified, as shown in part (b). A block diagram for a power supply is shown in part (c). When connected to the rectifier,

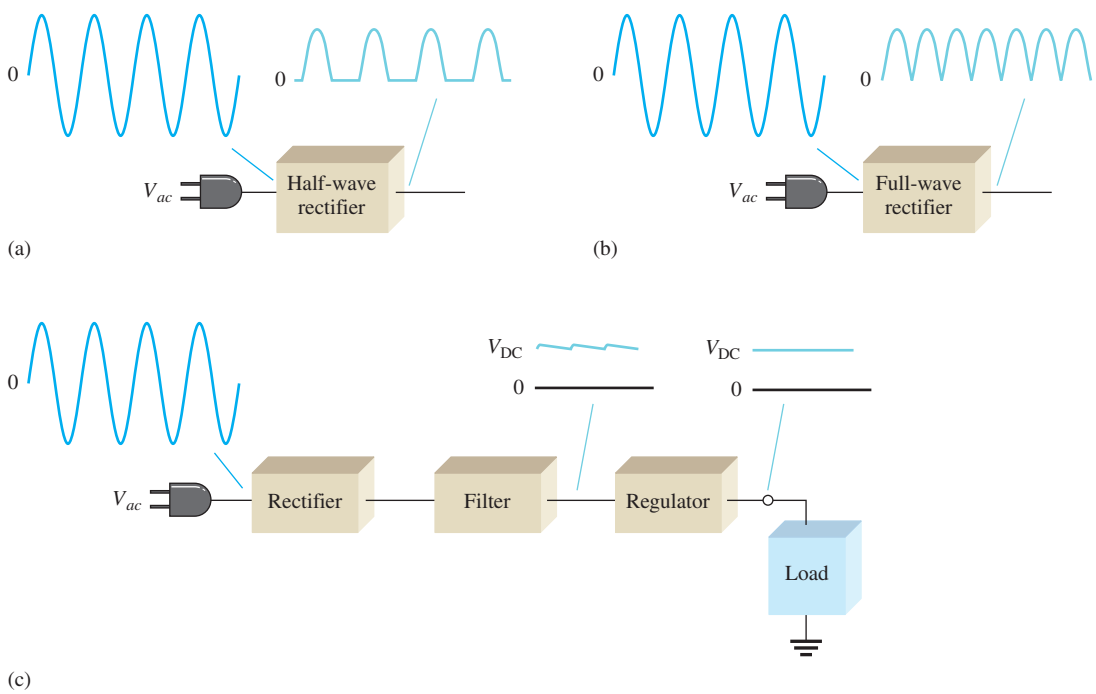

▲ FIGURE 39

Block diagrams showing basic operation of rectifiers and a regulated dc power supply.

www.EngineeringBooksPdf.com

a capacitor **filter** eliminates the fluctuations in the rectified voltage and produces a relatively smooth dc voltage.

The **regulator** is a circuit that maintains a constant dc voltage for variations in the input line voltage or in the load. Regulators vary from a single device to more complex integrated circuits. The load block is usually a circuit for which the power supply is producing the dc voltage and load current.

Capacitor-Input Filter

A half-wave rectifier with a **capacitor-input filter** is shown in Figure 40. The half-wave rectifier is used to illustrate the filtering principle; then the concept is expanded to the full-wave rectifier.

During the positive first quarter-cycle of the input, the diode is forward-biased, allowing the capacitor to charge to approximately the diode drop of the input peak, as illustrated in Figure 40(a). When the input begins to decrease below its peak, as shown in part (b), the capacitor retains its charge and the diode becomes reverse-biased. During the remaining part

▶ **FIGURE 40**

Operation of a half-wave rectifier with a capacitor-input filter.

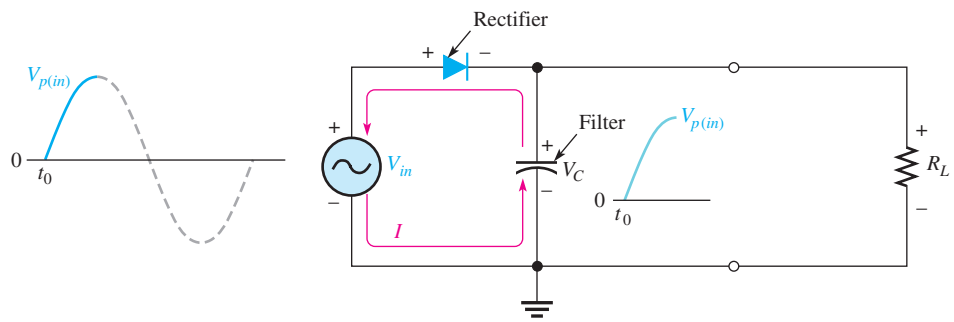

(a) Initial charging of capacitor (diode is forward-biased) happens only once when power is turned on.

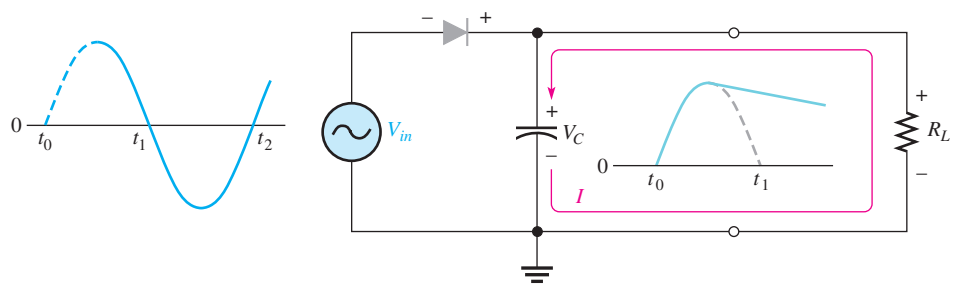

(b) The capacitor discharges through R_L after peak of positive alternation when the diode is reverse-biased. This discharging occurs during the portion of the input voltage indicated by the solid dark blue curve.

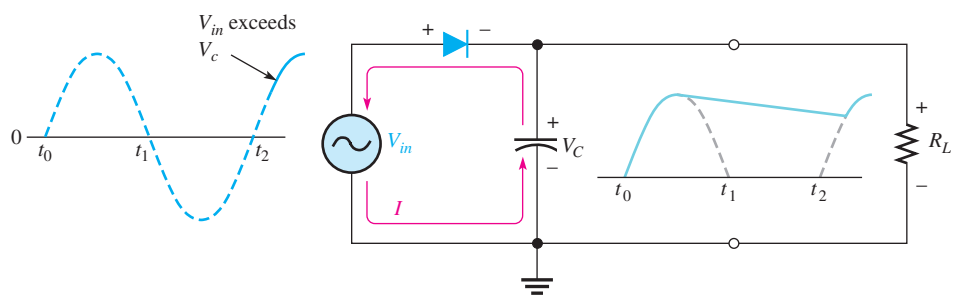

(c) The capacitor charges back to peak of input when the diode becomes forward-biased. This charging occurs during the portion of the input voltage indicated by the solid dark blue curve.

www.EngineeringBooksPdf.com

of the cycle, the capacitor can discharge only through the load resistance at a rate determined by the R_LC time constant. The larger the time constant, the less the capacitor will discharge.

Because the capacitor charges to a peak value equal to $V_{p(in)}$, the peak inverse voltage of the diode in this application is

$$\mathbf{PIV} = 2V_{p(in)}$$ **Equation 8**

During the first quarter of the next cycle, as illustrated in Figure 40(c), the diode again will become forward-biased when the input voltage exceeds the capacitor voltage.

Ripple Voltage As you have seen, the capacitor quickly charges at the beginning of a cycle and slowly discharges after the positive peak (when the diode is reverse-biased). The variation in the output voltage due to the charging and discharging is called the **ripple voltage**. The smaller the ripple, the better the filtering action, as illustrated in Figure 41.

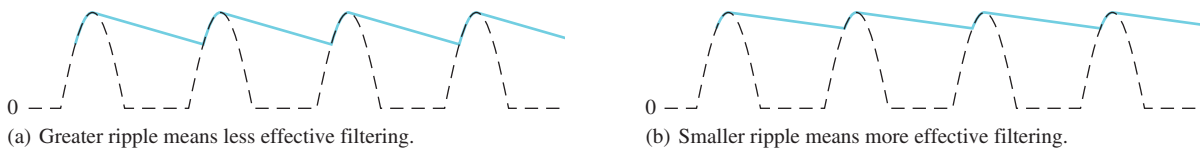

(a) Greater ripple means less effective filtering. (b) Smaller ripple means more effective filtering.

▲ **FIGURE 41**

Half-wave ripple voltage (blue line).

For a given input frequency, the output frequency of a full-wave rectifier is twice that of a half-wave rectifier. As a result, a full-wave rectifier is easier to filter. When filtered, the full-wave rectified voltage has a smaller ripple than does a half-wave signal for the same load resistance and capacitor values. A smaller ripple occurs because the capacitor discharges less during the shorter interval between full-wave pulses, as shown in Figure 42. A good rule of thumb for effective filtering is to make $R_LC \geq 10T$, where T is the period of the rectified voltage.

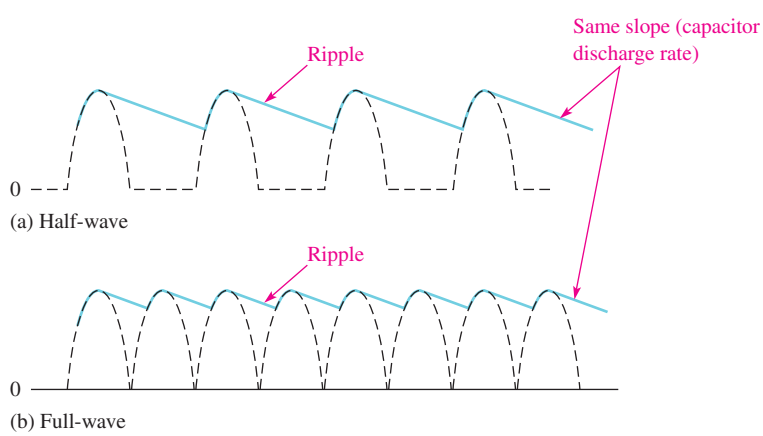

▲ **FIGURE 42**

Comparison of ripple voltages for half-wave and full-wave signals with same filter and same input frequency. For clarity, the amount of ripple showed is exaggerated.

The ripple factor (r) is an indication of the effectiveness of the filter and is defined as the ratio of the ripple voltage (V_r) to the dc (average) value of the filter output voltage (V_{DC}). These parameters are illustrated in Figure 43.

$$r = \left(\frac{V_r}{V_{DC}}\right)100\%$$ **Equation 9**

www.EngineeringBooksPdf.com

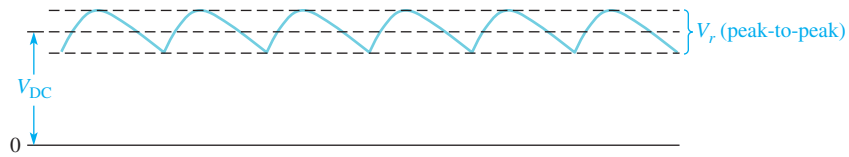

▲ FIGURE 43

V_r and V_{DC} determine the ripple factor.

The lower the ripple factor, the better the filter. The ripple factor can be decreased by increasing the value of the filter capacitor.

IC Regulated Power Supplies

While filters can reduce the ripple from power supplies to a low value, the most effective filter is a combination of a capacitor-input filter used with an integrated circuit (IC) voltage regulator. An **integrated circuit** regulator is a device that is connected to the output of a filtered rectifier and maintains a constant output voltage despite changes in the input, the load current, or the temperature. The capacitor-input filter reduces the input ripple to the regulator to an acceptable level. The combination of a large capacitor and an IC regulator is inexpensive and helps produce an excellent small power supply.

The most popular IC regulators have three terminals: an input terminal, an output terminal, and a reference (or adjust) terminal. The input to the regulator is first filtered with a capacitor to reduce the ripple to less than 10%. The regulator further reduces the ripple to a negligible amount. In addition, most regulators have an internal voltage reference, short-circuit protection, and thermal shutdown circuitry. They are available in a variety of voltages, including positive and negative outputs, and can be designed for variable outputs with a minimum of external components. Typically, IC regulators can furnish a constant output of one or more amps of current with high ripple rejection. IC regulators are available that can supply load currents of over 5 A.

Three-terminal regulators designed for a fixed output voltage require only external capacitors to complete the regulation portion of the power supply, as shown in Figure 44(a). Filtering is accomplished by a large-value capacitor between the input voltage and ground. Sometimes a second smaller-value input capacitor is connected in parallel, especially if the filter capacitor is not close to the IC, to prevent oscillation. This capacitor needs to be located close to the IC. Finally, an output capacitor (typically 0.1 μF to 1.0 μF) is placed in parallel with the output to improve the transient response.

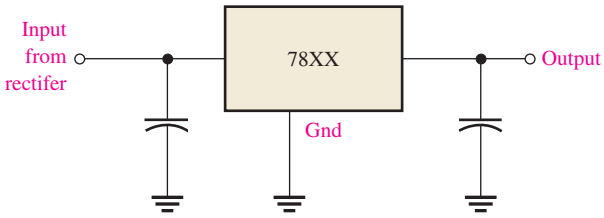

(a) Standard configuration

Type number	Output voltage
7805	+5.0 V
7806	+6.0 V
7808	+8.0 V
7809	+9.0 V
7812	+12.0 V
7815	+15.0 V
7818	+18.0 V
7824	+24.0 V

(b) The 7800 series

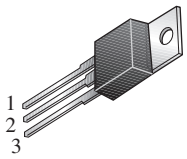

(Heatsink surface connected to Pin 2)

(c) Typical package

▲ FIGURE 44

The 7800 series regulator.

www.EngineeringBooksPdf.com

Examples of three-terminal regulators are the 78XX series of positive regulators (and the corresponding 79XX series of negative regulators.) The last two digits in the number stand for the output voltage; thus, the 7812 is a positive regulator with a +12 V output, and the 7912 is a negative regulator with a −12 V output. Figure 44(b) lists available voltages for the 78XX series. These regulators can supply up to 1 A of load current with adequate heat sinking and can hold the output voltage nearly constant in spite of changes to the input voltage or output load. They are available in various packages; the most common type is the TO-220 package shown in Figure 44(c). Other packages are shown on manufacturers' specification sheets. On the 78XX series with the TO-220 package, the metal tab is usually connected to a heat sink. The size of the heat sink is dependent on the power dissipation in the regulator and the allowable temperature rise. These regulators also have built-in current limiting, thermal shutdown, and safe-operating area protection.

A basic fixed power supply with a 7805 regulator is shown in Figure 45. The schematic combines the elements just discussed. The output of the bridge is filtered by a relatively large electrolytic capacitor to reduce ripple and present a dc to the input of the regulator. This voltage should be about 2.5 V larger than the output voltage for the 7805 regulator to be able to hold regulation—or at least 7.5 V out of the bridge. The schematic shows a standard 12.6 V transformer, but for the 7805, a lower voltage can be supplied by the transformer and still work nicely, as long as the peak secondary voltage is at least 9 V (to allow for diode drops and head room for the regulator). Generally, heat sinking is required to prevent the regulator from overheating.

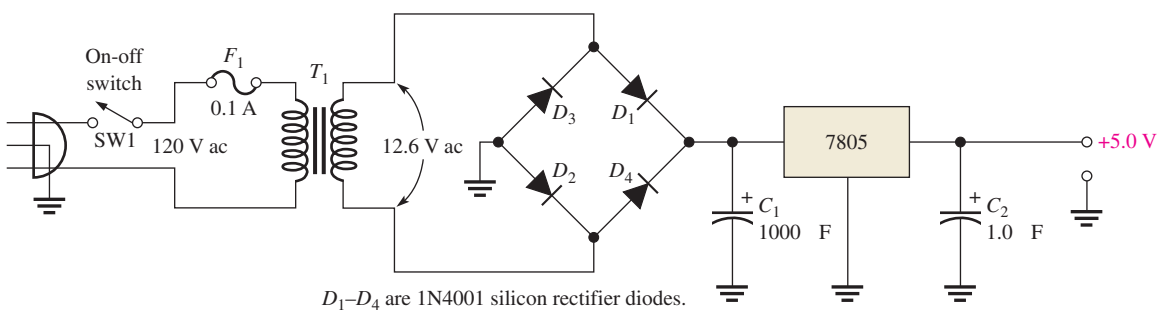

▲ **FIGURE 45**

A basic +5.0 V regulated power supply.

Another type of three-terminal regulator is the adjustable regulator. One of the most popular adjustable regulators is the LM117/LM317 series of adjustable positive regulators and the negative counterpart, the LM137/LM337 series of adjustable negative regulators. These regulators only require two external resistors to set the output voltage, which can range from 1.2 V to 37 V for the positive regulator and up to 1.5 A output. These regulators include features such a overload and short-circuit protection and have better specifications than most fixed regulators.

Figure 46 shows a power supply circuit with an adjustable output, controlled by the variable resistor, R_2. Note that R_2 is adjustable from zero to 1.0 kΩ. The LM317 regulator keeps a constant 1.25 V between the output and adjust terminals. This produces a constant current in R_1 of 1.25 V/240 Ω = 52 mA. Neglecting the very small current through the adjust terminal, the current in R_2 is the same as the current in R_1. The output is taken across both R_1 and R_2 and is found from the equation,

$$V_{out} = 1.25\text{ V}\left(\frac{R_1 + R_2}{R_1}\right)$$

www.EngineeringBooksPdf.com

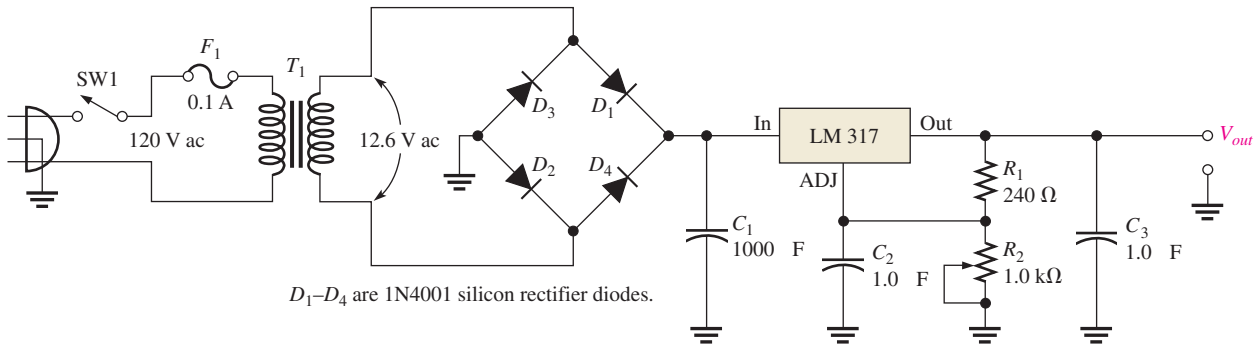

▲ **FIGURE 46**

A basic power supply with a variable output voltage (from 1.25 V to 6.5 V).

Notice that the output voltage from the power supply is the regulator's 1.25 V multiplied by a ratio of resistances. For the case shown in Figure 46, when R_2 is set to the minimum (zero) resistance, the output is 1.25 V. When R_2 is set to the maximum, the output is nearly 6.5 V.

Percent Regulation

The regulation expressed as a percentage is a figure of merit used to specify the performance of a voltage regulator. It can be in terms of input (line) regulation or load regulation. **Line regulation** specifies how much change occurs in the output voltage for a given change in the input voltage. It is typically defined as a ratio of a change in output voltage for a corresponding change in the input voltage expressed as a percentage.

Equation 10

$$\textbf{Line regulation} = \left(\frac{\Delta V_{OUT}}{\Delta V_{IN}}\right)100\%$$

Load regulation specifies how much change occurs in the output voltage over a certain range of load current values, usually from minimum current (no load, NL) to maximum current (full load, FL). It is normally expressed as a percentage and can be calculated with the following formula:

Equation 11

$$\textbf{Load regulation} = \left(\frac{V_{NL} - V_{FL}}{V_{FL}}\right)100\%$$

where V_{NL} is the output voltage with no load and V_{FL} is the output voltage with full (maximum) load.

EXAMPLE 7

Assume a certain 7805 regulator has a measured no-load output voltage of 5.18 V and a full-load output of 5.15 V. What is the load regulation expressed as a percentage?

Solution

$$\text{Load regulation} = \left(\frac{V_{NL} - V_{FL}}{V_{FL}}\right)100\% = \left(\frac{5.18\text{ V} - 5.15\text{ V}}{5.15\text{ V}}\right)100\% = \mathbf{0.58\%}$$

Related Problem

If the no-load output voltage of a regulator is 24.8 V and the full-load output is 23.9 V, what is the load regulation expressed as a percentage?

www.EngineeringBooksPdf.com

SECTION 5 CHECKUP

1. What causes the ripple voltage on the output of a capacitor-input filter?
2. The load resistance of a capacitor-filtered full-wave rectifier is reduced. What effect does this reduction have on the ripple voltage?
3. What advantages are offered by a three-terminal regulator?
4. What is the difference between input (line) regulation and load regulation?

6 SPECIAL-PURPOSE DIODES

In addition to the general-purpose rectifier diode previously covered, other diodes are used for special purposes. These include the zener diode, the varactor diode, the light-emitting diode (LED), and the photodiode. The zener diode is used to regulate voltages for reference purposes, the varactor diode is used as a voltage-variable capacitor, the LED emits light when forward-biased, and the photodiode is used to control the amount of reverse current with light.

After completing this section, you should be able to

- **Understand the basic operation of four special-purpose diodes and describe some applications**
  - Discuss some of the characteristics and applications of zener diodes
  - Describe the operation of varactor diodes
  - Describe the operation and application of LEDs
  - Discuss the operation and application of photodiodes

The Zener Diode

A major application for the zener diode is to provide an output reference voltage that is stable despite changes in input voltage. Reference voltages are used in power supplies, voltmeters, and many other instruments.

Figure 47 shows the schematic symbol for a zener diode. The **zener diode** is a silicon *pn* junction device that differs from the rectifier diode in that it is designed for operation in the reverse breakdown region. The breakdown voltage of a zener diode is set by carefully controlling the doping level during the manufacturing process. From the discussion of the diode characteristic curve in Section 3, recall that when a diode reaches reverse breakdown, its voltage remains almost constant even though the current may change drastically. This volt-ampere (*V-I*) characteristic is shown again in Figure 48 with normal operating regions for rectifier diodes and for zener diodes shown as shaded areas. If a zener diode is forward-biased, it operates the same as a rectifier diode.

▲ FIGURE 47

Zener diode symbol.

Zener Breakdown Two types of reverse breakdown in a zener diode are *avalanche* and *zener*. The avalanche breakdown also occurs in rectifier diodes at a sufficiently high reverse voltage. **Zener breakdown** occurs in a zener diode at low reverse voltages. A zener diode is heavily doped to reduce the breakdown voltage, causing a vary narrow depletion region. As a result, an intense electric field exists within the depletion region. Near the breakdown voltage (V_Z), the field is intense enough to pull electrons from their valence bands and create current.

Zener diodes with breakdown voltages of less than approximately 5 V operate predominantly in zener breakdown. Those with breakdown voltages greater than approximately

www.EngineeringBooksPdf.com

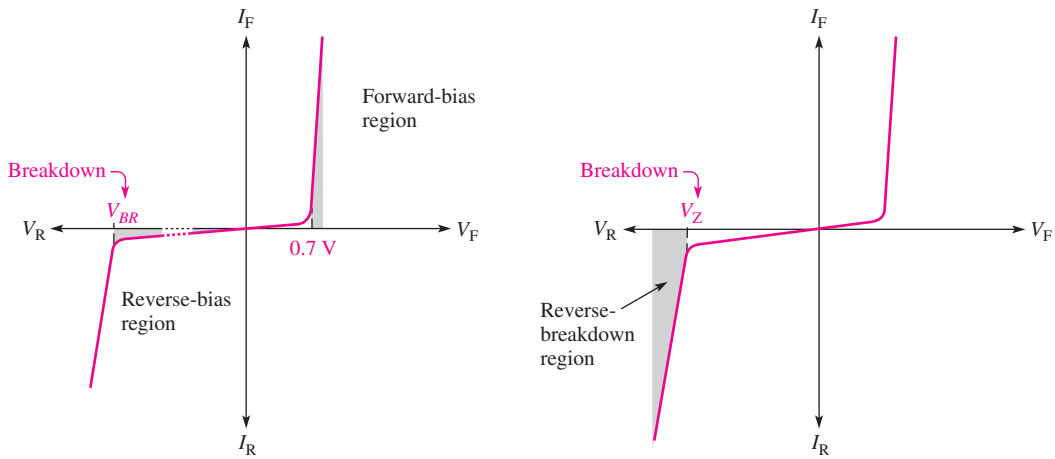

(a) The normal operating regions for a rectifier diode are shown as shaded areas.

(b) The normal operating region for a zener diode is shaded.

▲ **FIGURE 48**

Diode *V-I* characteristic illustrating the operation of a zener diode compared to a rectified diode. The slope of the reverse-breakdown region is exaggerated to show detail.

5 V operate predominantly in avalanche breakdown. Both types, however, are called *zener diodes.* Zeners with breakdown voltages of 1.8 V to over 300 V are generally available.

Figure 49 shows the reverse portion of the characteristic curve of a zener diode. Notice that as the reverse voltage (V_R) is increased, the reverse current (I_R) remains extremely small up to the "knee" of the curve. At this point, the breakdown effect begins; the zener impedance (Z_Z) begins to decrease as the current (I_Z) increases rapidly. From the bottom of the knee, the breakdown voltage (V_Z) remains essentially constant. This regulating ability is the key feature of the zener diode: *A zener diode maintains an essentially constant voltage across its terminals over a specified range of reverse current values.*

▶ **FIGURE 49**

Reverse characteristic of a zener diode. V_Z is usually specified at the zener test current, I_{ZT}, and is designated V_{ZT}.

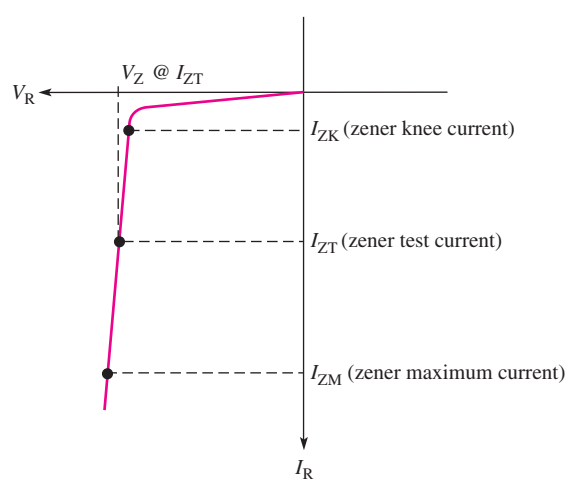

A minimum value of reverse current, I_{ZK}, must be maintained in order to keep the diode in regulation. You can see on the curve that when the reverse current is reduced below the knee of the curve, the voltage changes drastically and regulation is lost. Also, there is a maximum current, I_{ZM}, above which the diode may be damaged.

Thus, basically, the zener diode maintains a nearly constant voltage across its terminals for values of reverse current ranging from I_{ZK} to I_{ZM}. A nominal zener test voltage, V_{ZT},

www.EngineeringBooksPdf.com

is usually specified on a data sheet at a value of reverse current called the *zener test current,* I_{ZT}.

Zener Equivalent Circuit Figure 50(a) shows the ideal model of a zener diode in reverse breakdown. It simply acts as a battery having a value equal to the zener voltage. Figure 50(b) represents the practical equivalent of a zener, where the zener impedance (Z_Z) is included. The zener impedance is actually an ac resistance because it is dependent on the ratio of a change in voltage to a change in current and can be different for different portions of the characteristic curve. Since the voltage curve is not ideally vertical, a change in zener current (ΔI_Z) produces a small change in zener voltage (ΔV_Z), as illustrated in Figure 50(c).

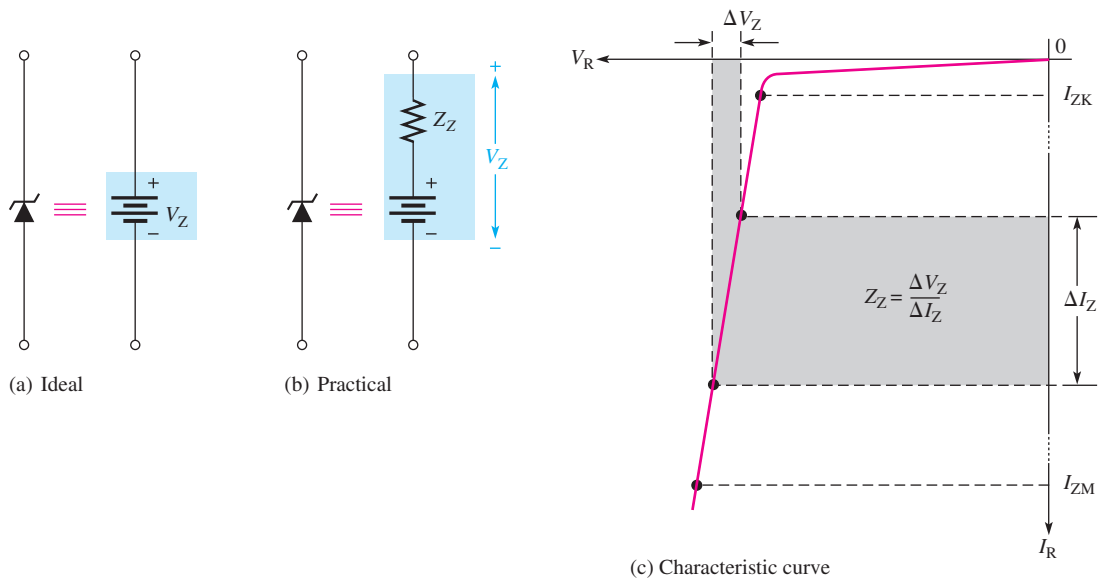

(a) Ideal (b) Practical (c) Characteristic curve

▲ **FIGURE 50**

Zener equivalent circuits. The slope is exaggerated to clarify the definition of Z_Z.

The ratio of ΔV_Z to ΔI_Z is the zener impedance, expressed as follows:

$$Z_Z = \frac{\Delta V_Z}{\Delta I_Z}$$ **Equation 12**

Normally, Z_Z is specified at I_{ZT}, the zener test current. In most cases, this value of Z_Z is nearly constant over the full range of reverse-current values.

EXAMPLE 8 A certain zener diode exhibits a 50 mV change in V_Z for a 2 mA change in I_Z. What is the zener impedance?

Solution

$$Z_Z = \frac{\Delta V_Z}{\Delta I_Z} = \frac{50\text{ mV}}{2\text{ mA}} = \mathbf{25\ \Omega}$$

Related Problem Calculate the zener impedance if the zener voltage changes 100 mV for a 20 mA change in zener current.

www.EngineeringBooksPdf.com

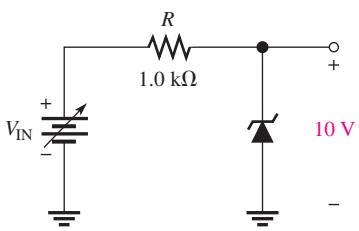

▲ FIGURE 51

Zener Voltage Regulation Although inexpensive 3-terminal integrated circuit voltage regulators provide better performance, zener diodes can be used for voltage regulation in noncritical low-current applications such as providing reference voltages. A basic circuit is shown in Figure 51.

As the input voltage varies (within limits), the zener diode maintains an essentially constant voltage across the output terminals. However, as V_{IN} changes, I_Z will change proportionally, and therefore the limitations on the input variation are set by the minimum and maximum current values within which the zener can operate and on the condition that $V_{IN} > V_Z$. Resistor R is the series current-limiting resistor.

Suppose that the 10 V zener diode in Figure 51 can maintain regulation over a range of current values from 4 mA to 40 mA. For the minimum current, the voltage across the 1.0 kΩ resistor is

$$V_R = (4\text{ mA})(1.0\text{ k}\Omega) = 4\text{ V}$$

Since

$$V_R = V_{IN} - V_Z$$

then

$$V_{IN} = V_R + V_Z = 4\text{ V} + 10\text{ V} = 14\text{ V}$$

For the maximum current, the voltage across the 1.0 kΩ resistor is

$$V_R = (40\text{ mA})(1.0\text{ k}\Omega) = 40\text{ V}$$

Therefore,

$$V_{IN} = 40\text{ V} + 10\text{ V} = 50\text{ V}$$

As you can see, this zener diode can regulate an input voltage from 14 V to 50 V and maintain approximately a 10 V output with no load or a very high impedance load. The output will vary some because of the zener impedance.

SAFETY NOTE

Zener diodes are important in intrinsically safe (IS) circuits, which are used in instrumentation and control circuits that are in hazardous environments (such as around propane tanks). Zeners limit the voltage to a level that is intrinsically safe, which is normally 24 Vdc or less. Thus, potential sparks with enough energy to initiate an explosion, are avoided.

Varactor Diodes

Varactor diodes are also known as variable-capacitance diodes because the junction capacitance varies with the amount of reverse-bias voltage. Varactor diodes are specifically designed to take advantage of this variable-capacitance characteristic. The capacitance can be changed by changing the reverse voltage. These devices are commonly used in electronic tuning circuits used in communications systems.

A **varactor** is basically a reverse-biased *pn* junction diode that utilizes the inherent capacitance of the depletion region. The depletion region, created by the reverse bias, acts as a capacitor dielectric because of its nonconductive characteristics. The *p* and *n* regions are conductive and act as the capacitor plates, as illustrated in Figure 52.

▶ FIGURE 52

The reverse-biased varactor diode acts as a variable capacitor.

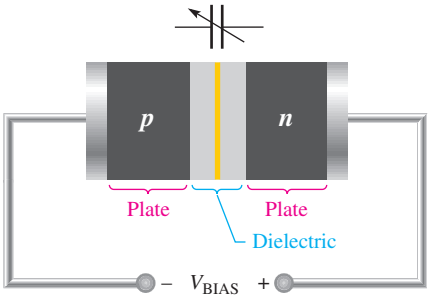

When the reverse-bias voltage increases, the depletion region widens, effectively increasing the dielectric thickness (d) and thus decreasing the capacitance. When the reverse-bias voltage decreases, the depletion region narrows, thus increasing the capacitance. This

www.EngineeringBooksPdf.com

action is shown in Figure 53(a) and 53(b). A typical curve of capacitance versus voltage is shown in part(c). The typical varactor can tune over a 10:1 range of capacitances. Varactors are available for various capacitances from approximately 1 pF to 200 pF.

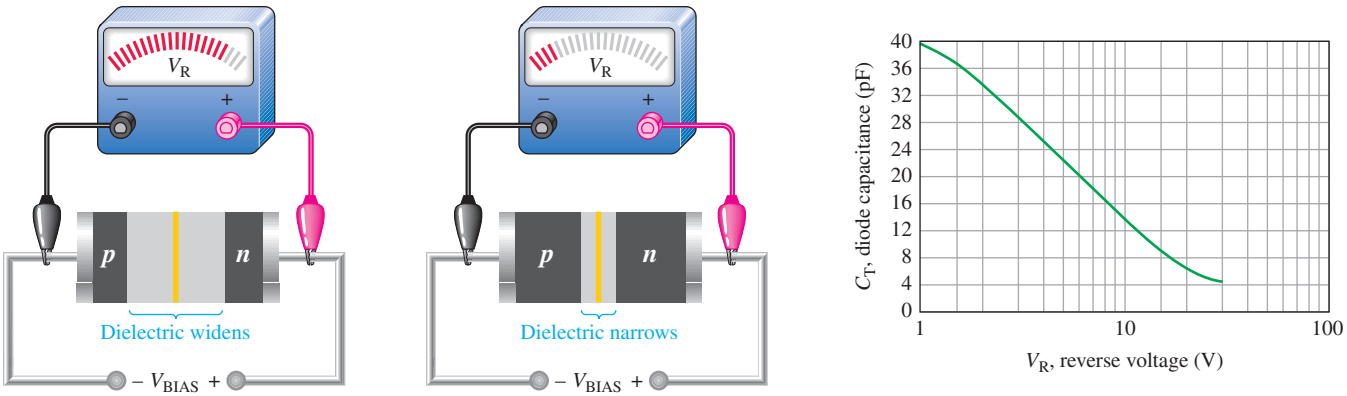

(a) Greater reverse bias, less capacitance (b) Less reverse bias, greater capacitance (c) Graph of diode capacitance versus reverse voltage

▲ **FIGURE 53**

Varactor diode capacitance varies with reverse voltage.

Recall that capacitance is determined by the plate area (A), dielectric constant (ε), and dielectric thickness (d), as expressed in the following formula:

$$C = \frac{A\varepsilon}{d}$$

Equation 13

In a varactor diode, the capacitance parameters are controlled by the method of doping in the depletion region and the size and geometry of the diode's construction.

Figure 54(a) shows a common symbol for a varactor, and part (b) shows a simplified equivalent circuit. R_S is the reverse series resistance, and C_V is the variable capacitance.

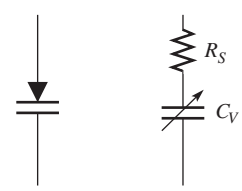

(a) Symbol (b) Equivalent circuit

▲ **FIGURE 54**

Varactor diode.

Applications A major application of varactors is as a part of a tuned circuit in communication devices. An example is the fm modulator. In an fm modulator, the output frequency is varied by a modulating voltage on the varactor. Frequency modulation (fm) is the process of varying a higher frequency signal (the carrier) with a lower frequency signal (the modulation signal.) As the modulating signal goes more negative, the output frequency decreases. The result is a simple and reliable method of changing the output frequency by a modulating signal.

A second application is in tuned (resonant) circuits. The varactor acts as a voltage controlled capacitor where the frequency that is desired is selected by changing the bias voltage on the varactor. This is useful for tuning a communication receiver to a predetermined frequency. A related application is in voltage-controlled oscillators, where the output frequency is determined by the reverse bias. They can be used over a very wide range of frequencies (including microwave frequencies).

The Light-Emitting Diode (LED)

The basic operation of an **LED** (light-emitting diode) is as follows: When the device is forward-biased, electrons cross the *pn* junction from the *n*-type material and recombine with holes in the *p*-type material. Recall that these free electrons are in the conduction band and at a higher energy level than the holes in the valence band. When recombination takes place, the recombining electrons release energy in the form of heat and light. A large exposed surface area on one layer of the semiconductor permits the photons to be emitted as visible light. Figure 55 illustrates this process, called *electroluminescence.*

www.EngineeringBooksPdf.com

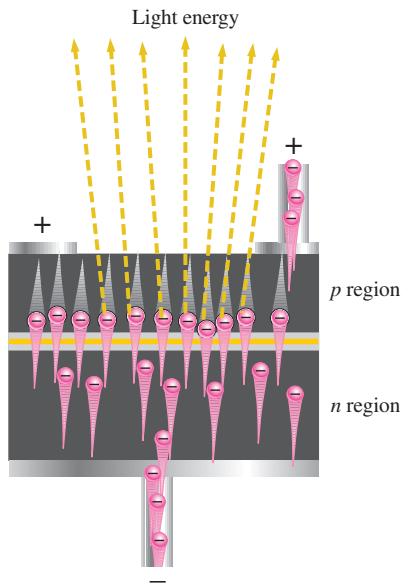

▶ FIGURE 55

Electroluminescence in a forward-biased LED.

▲ FIGURE 56

Symbol for an LED.

LED Semiconductor Materials The semiconductor gallium arsenide (GaAs) was used in early LEDs. The first visible red LEDs were produced using gallium arsenide phosphide (GaAsP) on a GaAs substrate. The efficiency was increased using a gallium phosphide (GaP) substrate, resulting in brighter red LEDs and also allowing orange LEDs. GaAs LEDs emit infrared (IR) radiation, which is invisible. The symbol for an LED is shown in Figure 56.

Later, GaP was used as the light-emitter to achieve pale green light. By using a red and a green chip, LEDs were able to produce yellow light. The first super-bright red, yellow, and green LEDs were produced using gallium aluminum arsenide phosphide (GaAlAsP). By the early 1990s ultrabright LEDs using indium gallium aluminum phosphide (InGaAlP) were available in red, orange, yellow, and green.

Blue LEDs using silicon carbide (SiC) and ultrabright blue LEDs made of gallium nitride (GaN) became available. High intensity LEDs that produce green and blue are also made using indium gallium nitride (InGaN). High-intensity white LEDs are formed using ultrabright blue GaN coated with fluorescent phosphors that absorb the blue light and reemit it as white light.

The LED emits light in response to a sufficient forward current, as shown in Figure 57(a). The amount of light output is directly proportional to the forward current, as indicated in Figure 57(b). Typical LEDs are shown in part (c).

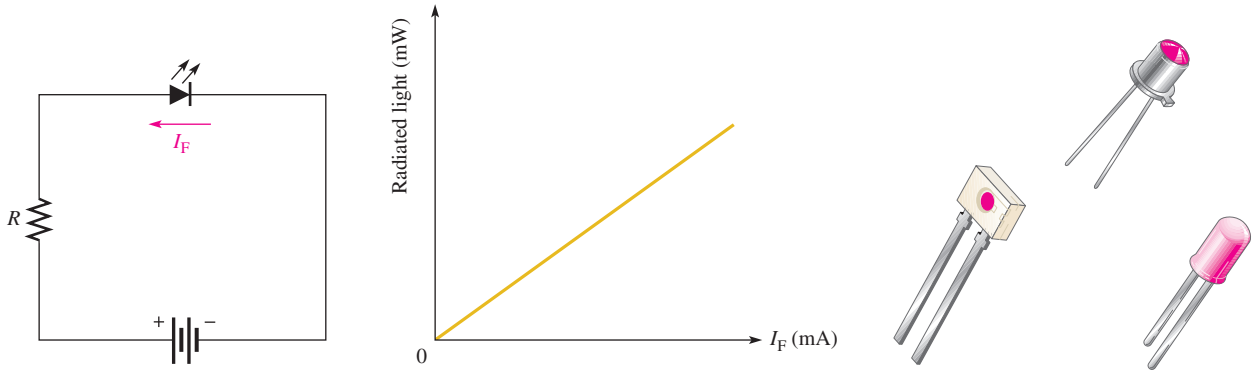

(a) Forward-biased operation (b) Typical light output versus forward current (c) Typical LEDs

▲ FIGURE 57

Light-emitting diodes (LEDs).

www.EngineeringBooksPdf.com

Applications Low-power LEDs are commonly used for indicator lamps and readouts such as the familiar 7-segment LED displays widely used in clocks and similar products. Recent advances in ultra-bright LEDs have greatly expanded the applications for LEDs to include traffic signals, automotive lighting, signs, and general lighting. LEDs are very efficient, which results in low heat and lower operating cost compared to conventional bulbs; in addition they have very long lives. Bright LEDs are available with various bases, including standard 120 V screw-type bases, to enable direct replacement of incandescent bulbs with LEDs.

The Photodiode

The **photodiode** is a *pn* junction device that operates in reverse bias, as shown in Figure 58(a). Note the schematic symbol for the photodiode. The photodiode has a small transparent window that allows light to strike the *pn* junction. Typical photodiodes are shown in Figure 58(b), and an alternate symbol is shown in part (c).

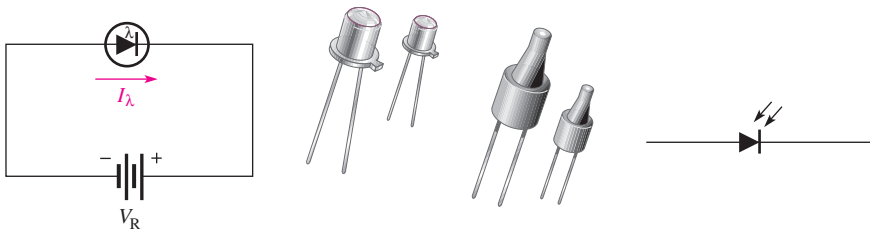

(a) Reverse-bias operation (b) Typical devices (c) Alternate symbol

FIGURE 58

Photodiode.

Recall that when reverse-biased, a rectifier diode has a very small reverse leakage current. The same is true for the photodiode. The reverse-biased current is produced by thermally generated electron hole pairs in the depletion region, which are swept across the junction by the electric field created by the reverse voltage. In a rectifier diode, the reverse current increases with temperature due to an increase in the number of electron hole pairs.

In a photodiode, the reverse current increases with the light intensity at the exposed *pn* junction. When there is no incident light, the reverse current (I_λ) is almost negligible and is called the *dark current.* An increase in the amount of light intensity, expressed as irradiance (mW/cm^2), produces an increase in the reverse current, as shown by the graph in Figure 59.

FIGURE 59

General graph of reverse current versus irradiance for a photodiode.

An Application A simple photodiode application is depicted in Figure 60. Here a beam of light continuously passes across a conveyor belt and into a transparent window behind which is a photodiode circuit. When the light beam is interrupted by an object passing by on the conveyor belt, the sudden reduction in diode current activates a control circuit that advances a counter by one. The total count of objects that have passed that point is displayed by the counter. This basic concept can be extended and used for production control, shipping, and monitoring of activity on production lines.

www.EngineeringBooksPdf.com

▶ FIGURE 60

A photodiode circuit used in a system that counts objects as they pass on a conveyor belt.

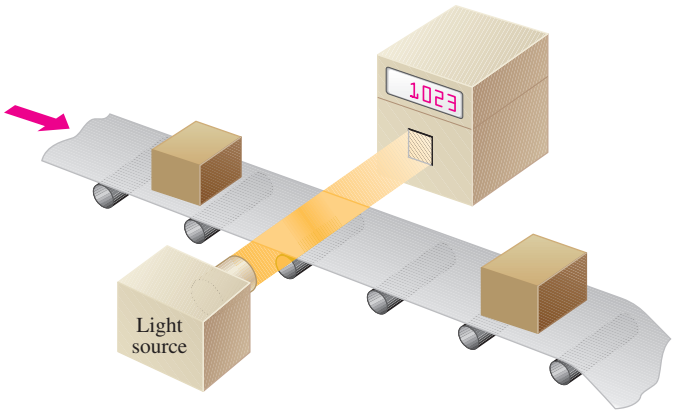

SECTION 6 CHECKUP

1. Zener diodes are normally operated in the breakdown region. (True or False)
2. A certain 10 V zener diode has a resistance of 8 Ω at 30 mA of reverse current. What is the terminal voltage?
3. What is the purpose of a varactor diode?
4. Based on the general curve in Figure 53(c), what happens to the diode capacitance when the reverse voltage is increased?
5. How does an LED differ from a photodiode?
6. There is a very small reverse current in a photodiode under no-light conditions. What is this current called?

7 TROUBLESHOOTING

This section provides a general review and application of the APM (analysis, planning, and measurement) approach to troubleshooting. Specific troubleshooting examples of the power supply and diode circuits are covered.

After completing this section, you should be able to

- **Troubleshoot power supplies and diode circuits using the APM approach**
  - Use analysis to evaluate a problem based on symptoms
  - Eliminate basic problems that can be detected by observation
  - Plan an approach to determining what the fault is in a circuit or system
  - Make appropriate measurements to isolate a fault
  - Recognize symptoms caused by certain types of component failures

As you know, you can approach the troubleshooting of a defective circuit or system using the APM method. A defective circuit or system is one with a known good input but with no output or an incorrect output. For example, in Figure 61(a), a properly functioning dc power supply is represented by a single block with a known input voltage and a correct output voltage. A defective dc power supply is represented in part (b) as a block with an input voltage and an incorrect output voltage.

www.EngineeringBooksPdf.com

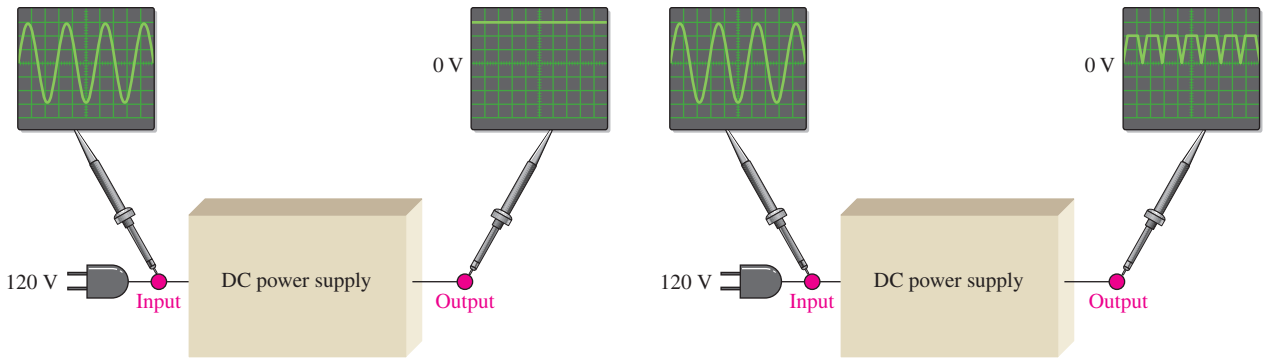

(a) The correct dc output voltage is measured.

(b) An incorrect voltage is measured at the output. The input voltage is correct.

▲ FIGURE 61

Block representations of functioning and nonfunctioning power supplies.

Analysis

The first step in troubleshooting a defective circuit or system is to analyze the problem, which includes identifying the symptom and eliminating as many causes as possible. In the case of the power supply example illustrated in Figure 61(b), the symptom is that the output voltage is not a constant regulated dc voltage. This symptom does not tell you much about what the specific cause may be. In other situations, however, a particular symptom may point to a given area where a fault is most likely.

The first thing you should do in analyzing the problem is to try to eliminate any obvious causes. In general, you should start by making sure the power cord is plugged into an active outlet and that the fuse is not blown. In the case of a battery-powered system, make sure the battery is good. Something as simple as this is sometimes the cause of a problem. However, in this case, there must be power because there is an output voltage.

Beyond the power check, use your senses to detect obvious defects, such as a burned resistor, broken wire, loose connection, or an open fuse. Since some failures are temperature dependent, you can sometimes find an overheated component by touch. However, be very cautious in a live circuit to avoid possible burn or shock. For intermittent failures, the circuit may work properly for awhile and then fail due to heat buildup. As a rule, you should always do a sensory check as part of the analysis phase before proceeding.

Planning

In this phase, you must consider how you will attack the problem. There are three possible approaches to troubleshooting most circuits or systems.

1. Start at the input where there is a known input voltage and work toward the output until you get an incorrect measurement. When you find no voltage or an incorrect voltage, you have narrowed the problem to the part of the circuit between the last test point where the voltage was good and the present test point. In all troubleshooting approaches, you must know what the voltage is supposed to be at each point in order to recognize an incorrect measurement when you see it.

2. Start at the output of a circuit and work toward the input. Check for voltage at each test point until you get a correct measurement. At this point, you have isolated the problem to the part of the circuit between the last test point and the current test point where the voltage is correct.

www.EngineeringBooksPdf.com

3. Use the half-splitting method and start in the middle of the circuit. If this measurement shows a correct voltage, you know that the circuit is working properly from the input to that test point. This means that the fault is between the current test point and the output point, so begin tracing the voltage from that point toward the output. If the measurement in the middle of the circuit shows no voltage or an incorrect voltage, you know that the fault is between the input and that test point. Therefore, begin tracing the voltage from the test point toward the input.

For illustration, let's say that you decide to apply the half-splitting method using an oscilloscope.

Measurement

The half-splitting method is illustrated in Figure 62 with the measurements indicating a particular fault (open filter capacitor in this case). At test point 3 (TP3) you observe a full-wave rectified voltage that indicates that the transformer and rectifier are working properly. This measurement also indicates that the filter capacitor is open, which is verified by the full-wave voltage at TP4. If the filter were working properly, you would measure a dc voltage at both TP3 and TP4. If the filter capacitor were shorted, you would observe no voltage at all of the test points except TP1 because the fuse would most likely be blown. A short anywhere in the system is very difficult to isolate because, if the system is properly fused, the fuse will blow immediately when a short to ground develops.

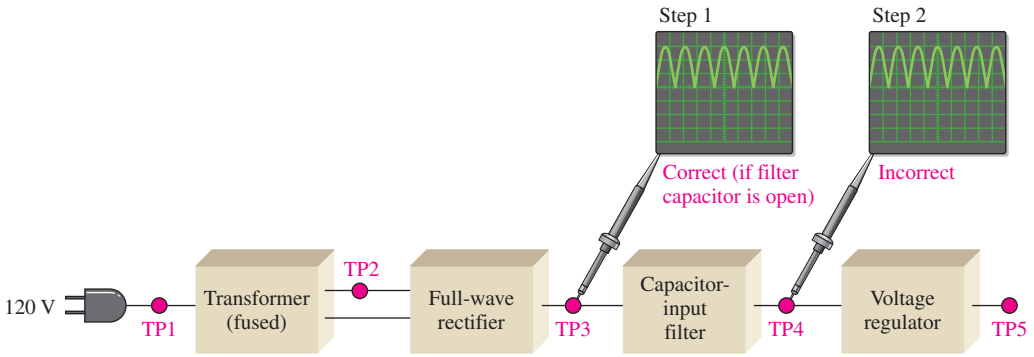

▲ FIGURE 62

Example of the half-splitting approach. An open filter capacitor is indicated.

For the case illustrated in Figure 62, the half-splitting method took two measurements to isolate the fault to the open filter capacitor. If you had started from the power supply input, it would have taken four measurements; and if you had started at the final output, it would have taken three measurements, as illustrated in Figure 63.

Fault Analysis

In some cases, after isolating a fault to a particular circuit, it may be necessary to isolate the problem to a single component in the circuit. In this event, you have to apply logical thinking and your knowledge of the symptoms caused by certain component failures. Some typical component failures and the symptoms they produce are now discussed.

Effect of an Open Diode in a Half-Wave Rectifier A half-wave filtered rectifier with an open diode is shown in Figure 64. The resulting symptom is zero output voltage as indicated. This is obvious because the open diode breaks the current path from the transformer secondary winding to the filter and load resistor and there is no load current.

www.EngineeringBooksPdf.com

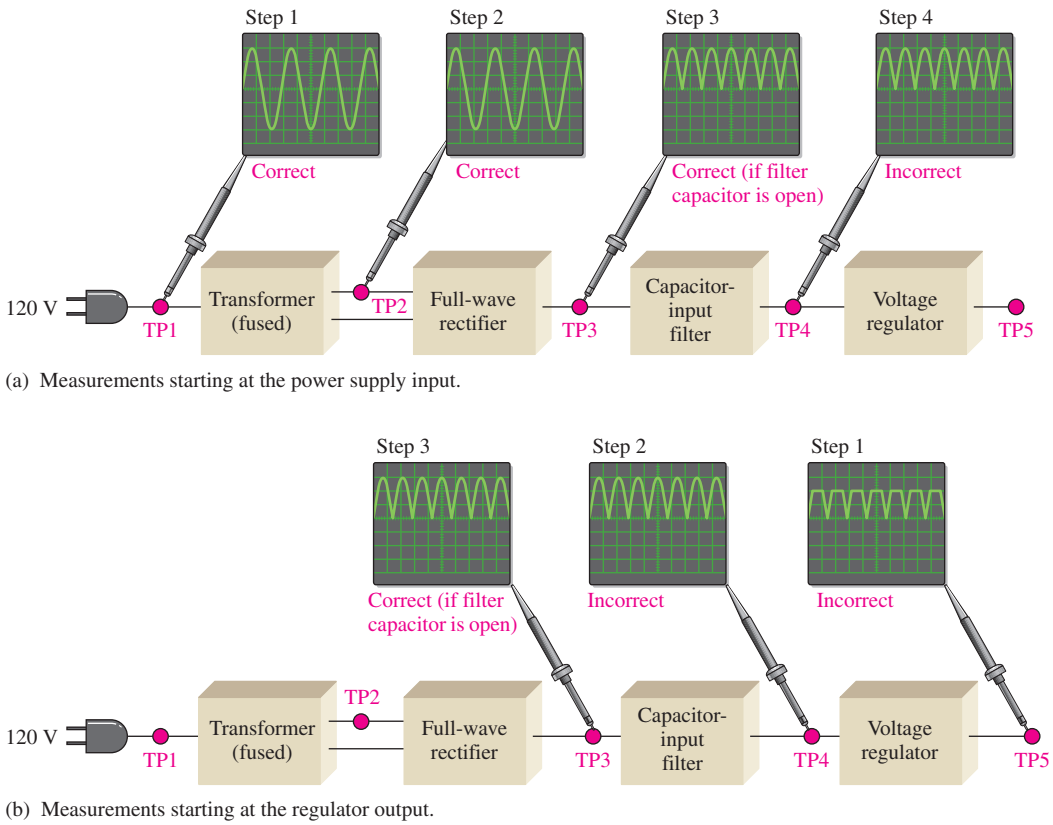

(a) Measurements starting at the power supply input.

(b) Measurements starting at the regulator output.

▲ **FIGURE 63**

In this particular case, the two other approaches require more measurements than the half-splitting approach in Figure 62.

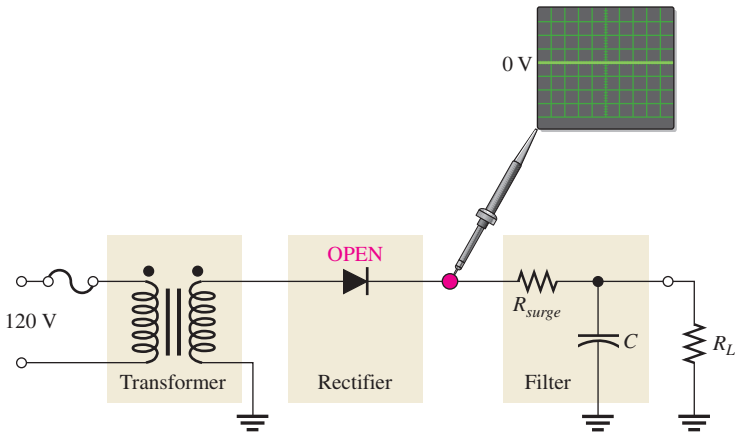

◀ **FIGURE 64**

The effect of an open diode in a half-wave rectifier is an output of 0 V.

Other faults that will cause the same symptom in this circuit are an open transformer winding, an open fuse, or no input voltage.

Effect of an Open Diode in a Full-Wave Rectifier A full-wave center-tapped filtered rectifier is shown in Figure 65. If either of the two diodes is open, the output voltage will have a larger than normal ripple voltage at 60 Hz rather than at 120 Hz, as indicated.

Another fault that will cause the same symptom is an open in one of the halves of the transformer secondary winding.

www.EngineeringBooksPdf.com

▶ **FIGURE 65**

The effect of an open diode in a center-tapped rectifier is half-wave rectification and a larger ripple voltage at 60 Hz.

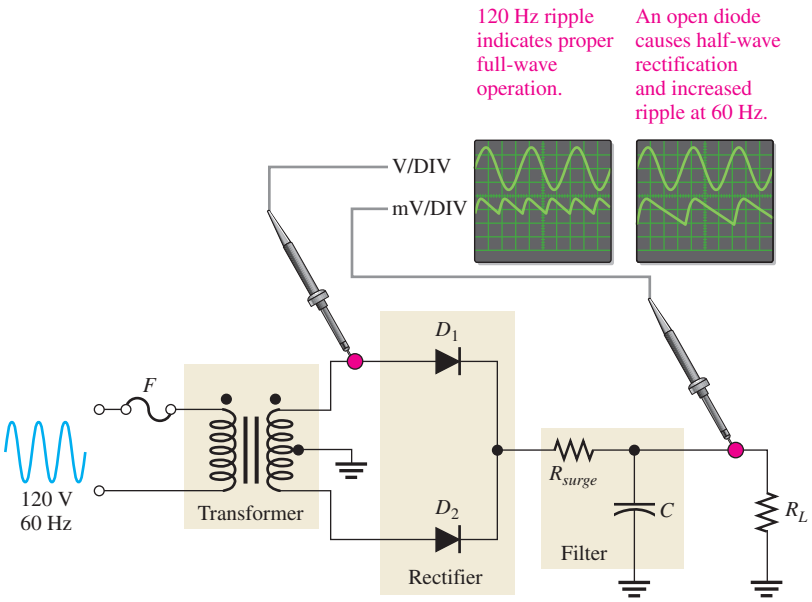

The reason for the increased ripple at 60 Hz rather than at 120 Hz is as follows. If one of the diodes in Figure 65 is open, there is current through R_L only during one half-cycle of the input voltage. During the other half-cycle of the input, the open path caused by the open diode prevents current through R_L. The result is half-wave rectification, as shown in Figure 65, which produces the larger ripple voltage with a frequency of 60 Hz.

An open diode in a full-wave bridge rectifier will produce the same symptom as in the center-tapped circuit, as shown in Figure 66. The open diode prevents current through R_L during half of the input voltage cycle. The result is half-wave rectification, which produces an increase in ripple voltage at 60 Hz.

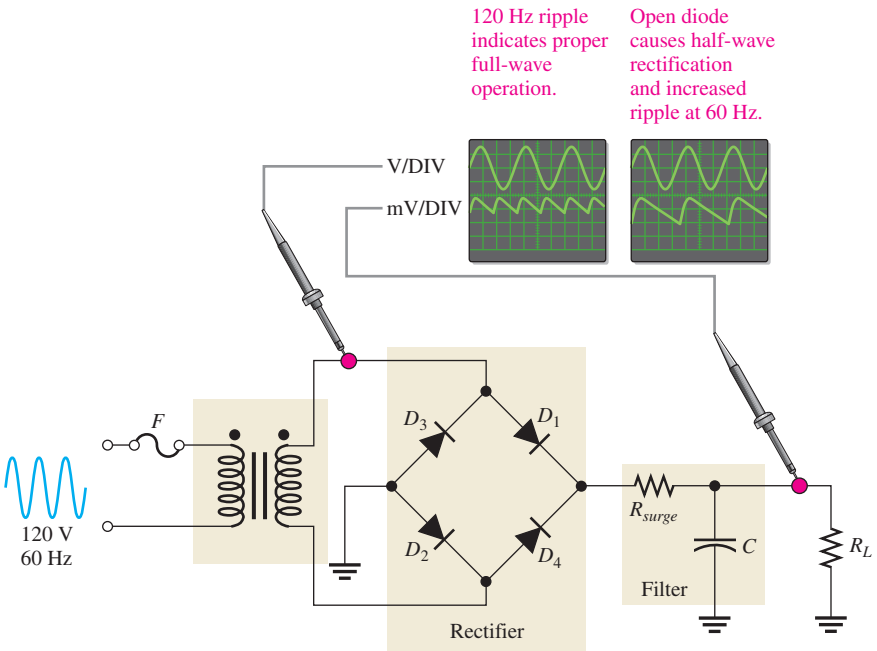

▲ **FIGURE 66**

Effect of an open diode in a bridge rectifier.

www.EngineeringBooksPdf.com

Effects of a Faulty Filter Capacitor Three types of defects of a filter capacitor are illustrated in Figure 67.

- *Open* If the filter capacitor for a full-wave rectifier opens, the output is a full-wave rectified voltage.
- *Shorted* If the filter capacitor shorts, the output is 0 V. A shorted capacitor should cause the fuse to blow open. If not properly fused, a shorted capacitor may cause some or all of the diodes in the rectifier to burn open due to excessive current. In any event, the output is 0 V.
- *Leaky* A leaky filter capacitor is equivalent to a capacitor with a parallel leakage resistance. The effect of the leakage resistance is to reduce the time constant and allow the capacitor to discharge more rapidly than normal. This results in an increase in the ripple voltage on the output. This fault is rare.

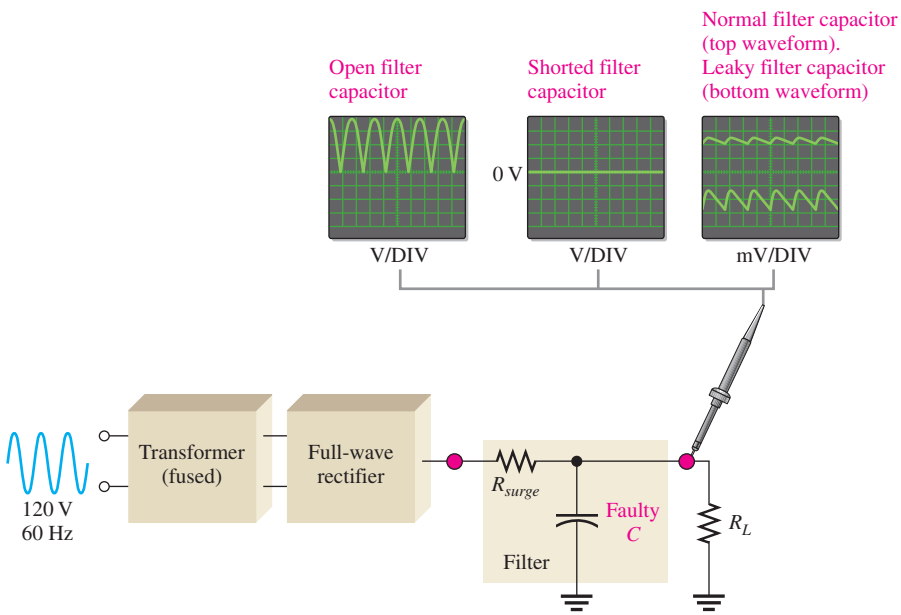

▲ **FIGURE 67**

Effects of a faulty filter capacitor.

Effects of a Faulty Transformer An open primary or secondary winding of a power supply transformer results in an output of 0 V, as mentioned before.

A partially shorted primary winding (which is much less likely than an open) results in an increased rectifier output voltage because the turns ratio of the transformer is effectively increased. A partially shorted secondary winding results in a decreased rectifier output voltage because the turns ratio is effectively decreased.

EXAMPLE 9

You are troubleshooting the power supply shown in the block diagram of Figure 68. You have found in the analysis phase that there is no output voltage from the regulator, as indicated. Also, you have found that the unit is plugged into the outlet and have verified the input to the transformer, as indicated. You decide to use the half-splitting method using the scope. What is the problem?

www.EngineeringBooksPdf.com

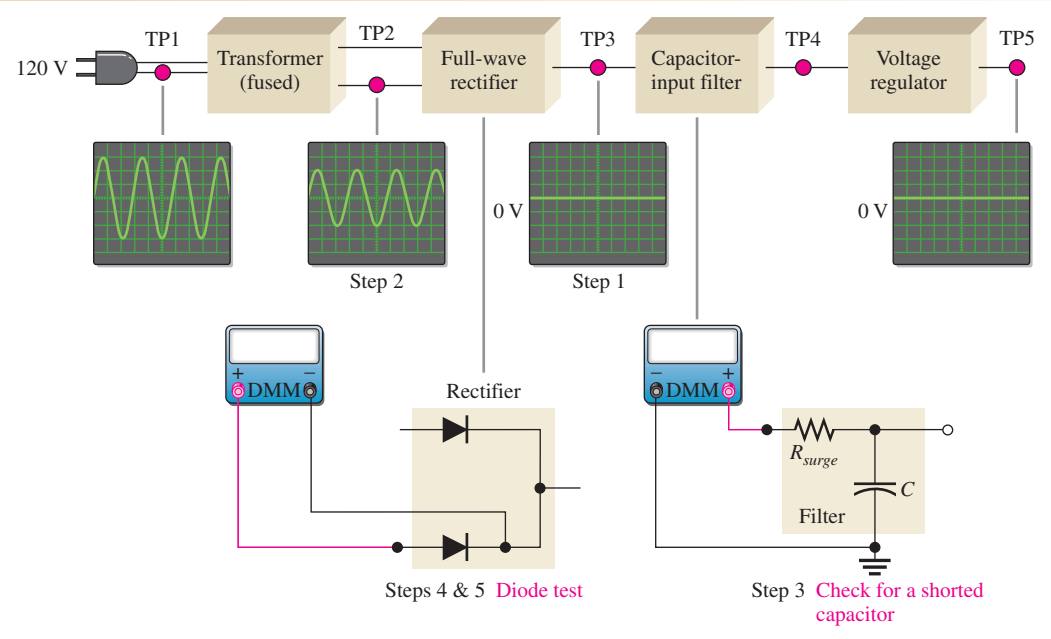

▲ FIGURE 68

Solution The step-by-step measurement procedure is illustrated in the figure and described as follows.

Step 1: There is no voltage at test point 3 (TP3). This indicates that the fault is between the input to the transformer and the output of the rectifier. Most likely, the problem is in the transformer or in the rectifier, but there may be a short from the filter input to ground.

Step 2: The voltage at test point 2 (TP2) is correct, indicating that the transformer is working. So, the problem must be in the rectifier or a shorted filter input.

Step 3: With the power turned off, use a DMM to check for a short from the filter input to ground. Assume that the DMM indicates no short. The fault is now isolated to the rectifier.

Step 4: Apply fault analysis to the rectifier circuit. Determine the component failure in the rectifier that will produce a 0 V input. If only one of the diodes in the rectifier is open, there should be a half-wave rectified output voltage, so this is not the problem. In order to have a 0 V output, both of the diodes must be open.

Step 5: With the power off, use the DMM in the diode test mode to check each diode. Replace the defective diodes, turn the power on, and check for proper operation. Assume this corrects the problem.

Related Problem Suppose you had found a short in Step 3, what would have been the logical next step?

SECTION 7 CHECKUP

1. What effect does an open diode have on the output voltage of a half-wave rectifier?
2. What effect does an open diode have on the output voltage of a full-wave rectifier?
3. If one of the diodes in a bridge rectifier shorts, what are some possible consequences?

www.EngineeringBooksPdf.com

4. What happens to the output voltage of a rectifier if the filter capacitor becomes very leaky?
5. The primary winding of the transformer in a power supply opens. What will you observe on the rectifier output?
6. The dc output voltage of a filtered rectifier is less than it should be. What may be the problem?

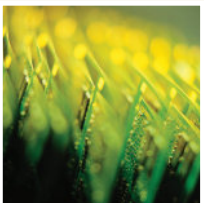

Application Assignment

PUTTING YOUR KNOWLEDGE TO WORK

The optical counting system in this assignment incorporates the zener diode, the LED, and the photodiode, as well as other types of devices. Of course, at this point, you are interested in only how the zener and the optical diodes are used.

Description of the System

The system is used to count objects as they pass on a moving conveyor and can be used in production line monitoring, loading, shipping, inventory control, and the like. The system consists of a power supply, an infrared (IR) emitter circuit, an infrared detector, a threshold circuit, and counter/display circuits, as shown in Figure 69.

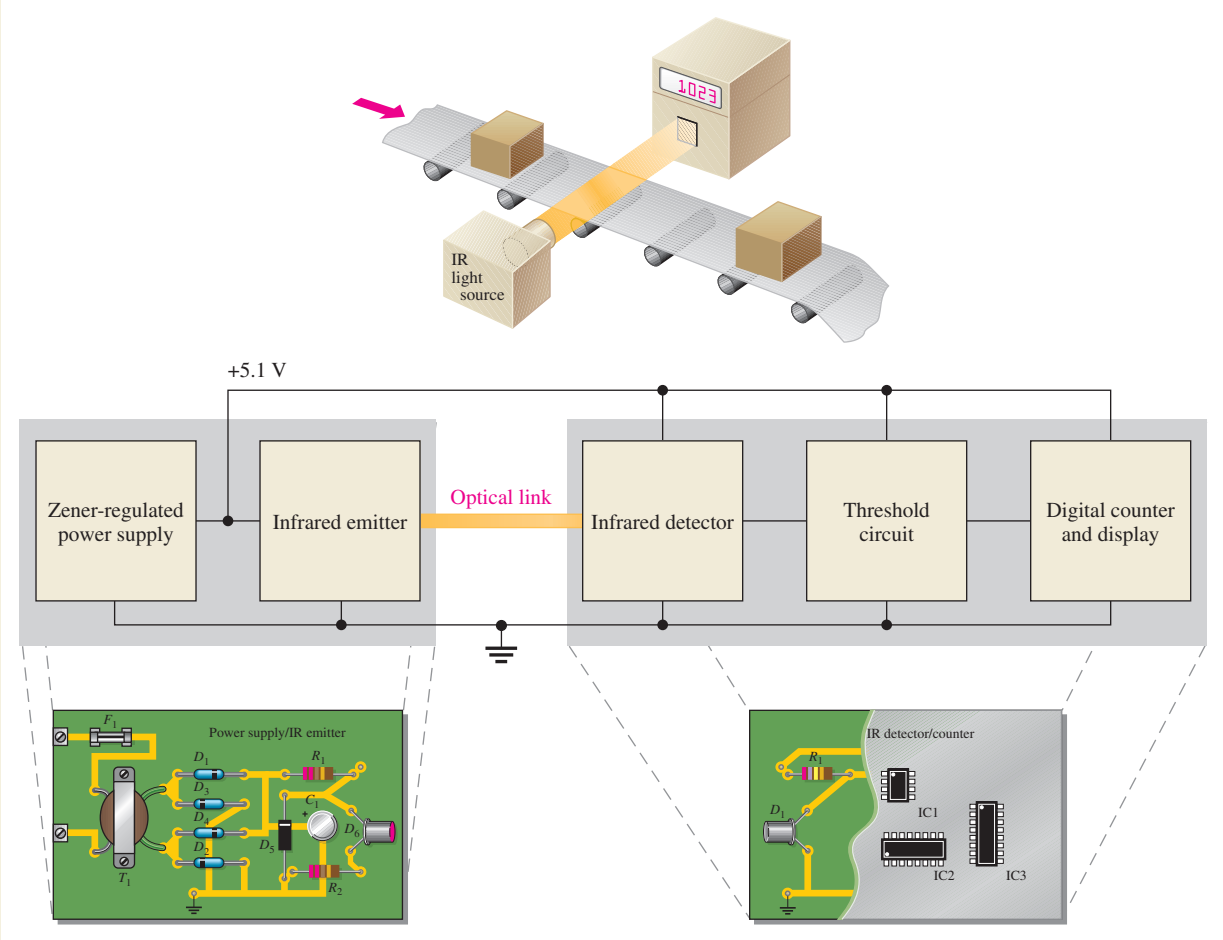

▲ FIGURE 69

The optical counting system showing the system concept, block diagram, and circuit boards.

www.EngineeringBooksPdf.com

The power supply and infrared emitter are housed in a single unit and positioned on one side of the conveyor. The IR detector/counter unit is positioned directly opposite on the other side. The dc power supply provides power to both units. The emitter produces a continuous pattern of infrared light directed toward the detector. As long as the detector is receiving light, nothing happens. When an object passes between the two units and blocks the infrared light, the detector reacts. This reaction is sensed by the threshold circuit, which sends a signal to a digital counter, advancing its count by one. The total count can be displayed and/or sent to a central computer.

In this section, you are not concerned with the details of the threshold circuit or the digital counter and display circuit. They are included only to make a complete system and to show that the circuits you are concerned with must **interface** with other types of circuits in order to perform the required system function. At this point, you are strictly interested in how some of the devices covered in this chapter function in the system.

Physically, the power supply/IR emitter unit consists of one printed circuit board that contains the regulated dc power supply and the infrared emitter circuit. The IR detector/counter unit consists of one printed circuit board that contains the infrared detector circuit, a threshold circuit, and the digital counter and display circuits. Except for the infrared detector, you do not need to know the details of how they work for the purposes of this assignment.

Step 1: Identifying the Components

The power supply/IR emitter circuit board is shown in Figure 70. The dc voltage regulator is made up of a resistor R_1 and zener diode D_5. The infrared emitter circuit consists of R_2 and D_6, which is an infrared LED. The infrared detector circuit on the IR detector/counter board in Figure 71 is formed by R_1 and infrared photodiode D_1. As you can see, the LED and the photodiode are identical in appearance and can only be distinguished by a part number stamped on the case or on the package from which they are taken. The digital portion of this board is shown in the gray area without detail. The digital integrated circuits, IC1, IC2, and IC3, are in SOIC (Small Outline Integrated Circuit) packages. SOIC is a surface-mount technology packaging configuration. Although digital circuits are studied in other courses, you see here an example of a common situation in many systems where linear (analog) and digital circuits work together.

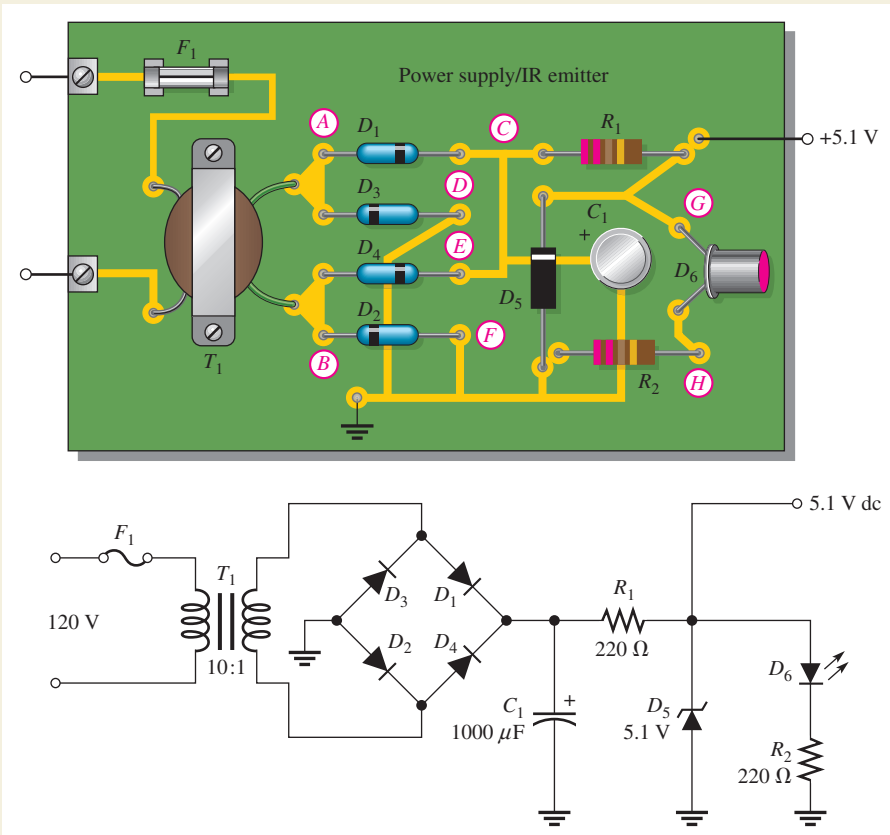

▲ FIGURE 70

www.EngineeringBooksPdf.com

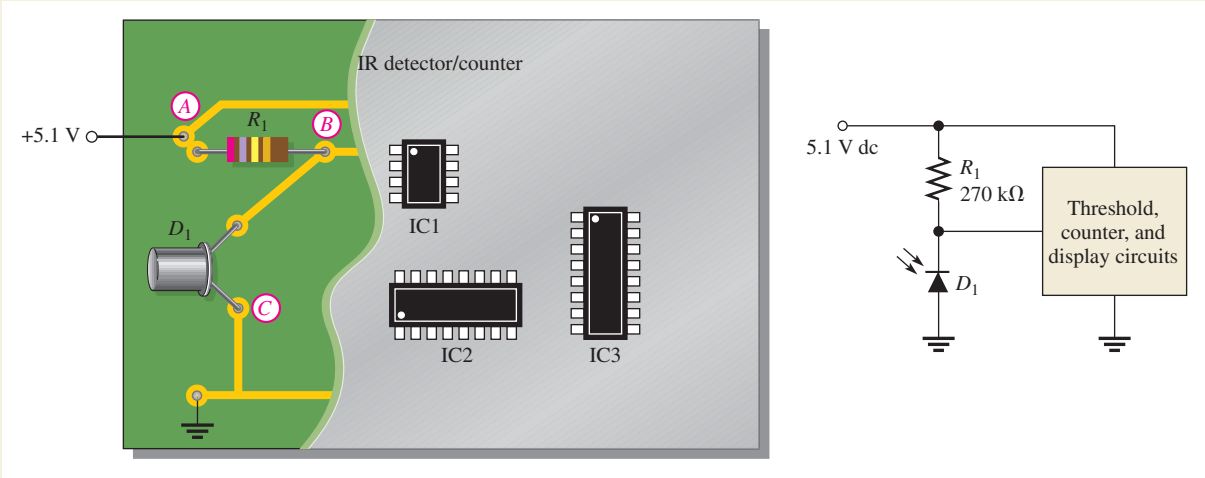

▲ FIGURE 71

Step 2: Relating the PC Boards to the Schematics

Carefully follow the conductive traces on each PC board to see how the components are interconnected. Compare each point (*A* through *H*) on the power supply/IR emitter board with the corresponding point on the schematic in Figure 70. Do the same for each point (*A* through *C*) on the IR detector/counter board in Figure 71. This exercise will develop your skill in relating a schematic to an actual circuit—an important skill for an electronics technician. For each point on the PC board, place the letter of the corresponding point or points on the schematic.

Step 3: Analyzing the Power Supply and IR Emitter

With the power supply/IR emitter board plugged into an ac outlet, determine the dc voltages at points 1, 2, and 3 indicated in Figure 72. Assume that the circuit is operating properly.

Step 4: Analyzing the IR Detector

With the dc supply voltage from the power supply connected to the IR detector/counter board and with light blocked from the photodiode lens, determine the voltage at point 4 in Figure 72. Assume that the dark current is negligible. Neglect any input current to the threshold circuit.

Step 5: Testing the Total System

With the two units optically aligned and with the power on, determine the voltage at point 4 in the detector circuit. Assume that a reverse current of 10 μA is through the photodiode with

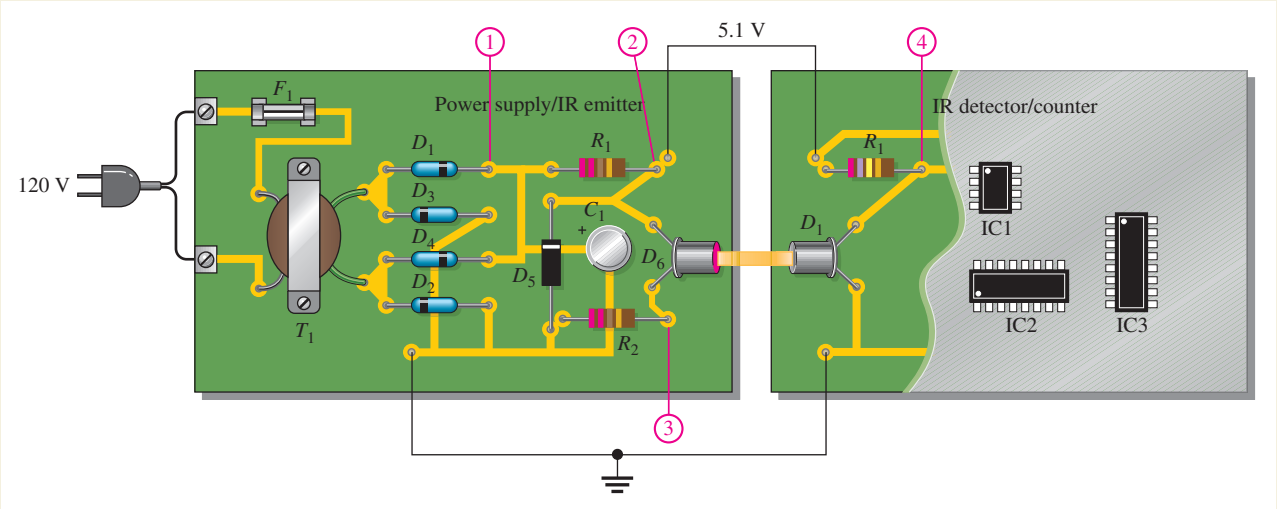

▲ FIGURE 72

www.EngineeringBooksPdf.com

incident light. Neglect any input current drawn by the threshold circuit. What is the voltage at point 4 when the system detects a passing object?

Step 6: Troubleshooting the System

For each of the following measurements with respect to ground, determine the most probable cause if a faulty reading is indicated. Refer to Figure 72.

1. No voltage at point 1
2. No voltage at point 2
3. A voltage at point 2 that varies from 0 V to about 5 V with a frequency of 120 Hz
4. A constant dc voltage of approximately 7.8 V at point 2
5. A constant dc voltage of approximately 4.3 V at point 2
6. A floating level at point 4
7. Approximately 5.1 V at point 4 with no light obstruction between the emitter and the detector
8. A voltage of 0 V at point 4

Review

1. List all of the types of diodes used in this system.
2. What is the purpose of resistor R_2 on the power supply/IR emitter board?
3. What would you do to change the dc voltage to 8.2 V in this system?
4. Does the LED emit continuous IR or does it turn on and off as objects pass by?
5. What is the purpose of the photodiode in this system?

SUMMARY

- The process of adding impurities to an intrinsic (pure) semiconductor to increase and control conductivity is called *doping*.
- A *p*-type semiconductor is doped with trivalent impurity atoms.
- A *n*-type semiconductor is doped with pentavalent impurity atoms.
- The depletion region is a region adjacent to the *pn* junction containing no majority carriers.
- Forward bias permits majority carrier current through the diode.
- Reverse bias prevents majority carrier current.
- The single diode in a half-wave rectifier conducts for half of the input cycle.
- The output frequency of a half-wave rectifier equals the input frequency.
- The average (dc) value of a half-wave rectified signal is 0.318 or $1/\pi$ times its peak value.
- The PIV is the maximum voltage appearing across the diode in reverse bias.
- Each diode in a full-wave rectifier conducts for half of the input cycle.
- The output frequency of a full-wave rectifier is twice the input frequency.
- The basic types of full-wave rectifier are center-tapped and bridge.
- The output voltage of a center-tapped, full-wave rectifier is approximately one-half of the total secondary voltage.
- The PIV for each diode in a center-tapped, full-wave rectifier is twice the output voltage.
- The output voltage of a bridge rectifier equals the total secondary voltage.
- The PIV for each diode in a bridge rectifier is half that required for the center-tapped configuration and is approximately equal to the peak output voltage.
- A capacitor-input filter provides a dc output approximately equal to the peak of the input.
- Ripple voltage is caused by the charging and discharging of the filter capacitor.
- The smaller the ripple, the better the filter.
- Regulation of output voltage over a range of input voltages is called *input* or *line regulation.*
- Regulation of output voltage over a range of load currents is called *load regulation.*
- The zener diode operates in reverse breakdown.
- When $V_Z < 5$ V, zener breakdown is predominant.
- When $V_Z > 5$ V, avalanche breakdown is predominant.

www.EngineeringBooksPdf.com

- A zener diode maintains an essentially constant voltage across its terminals over a specified range of zener currents.
- Zener diodes can be used as voltage references in a variety of applications.
- A varactor diode acts as a variable capacitor under reverse-biased conditions.
- The capacitance of a varactor varies inversely with reverse-biased voltage.
- Diode symbols are shown in Figure 73.

▶ FIGURE 73

Diode symbols.

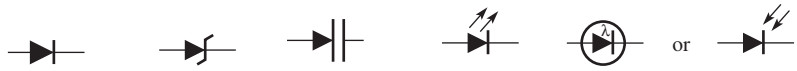

(a) Rectifier (b) Zener (c) Varactor (d) LED (e) Photodiode

KEY TERMS

Barrier potential The amount of voltage required to move electrons through the depletion region of a *pn* junction diode.

Bridge rectifier A type of full-wave rectifier consisting of diodes arranged in a four-cornered configuration.

Capacitor-input filter A power supply filter that uses a capacitor from the rectifier output to ground to eliminate most of the variation in the rectifier output voltage.

DC power supply An electronic instrument that produces voltage, current, and power from the ac power line or batteries in a form suitable for use in powering electronic equipment.

Diode An electronic device that permits current in only one direction.

Doping The process of imparting impurities to an intrinsic semiconductive material in order to control its conduction characteristics.

Forward bias The condition in which a diode conducts current.

Full-wave rectifier A circuit that converts an alternating sine wave into a pulsating dc consisting of both halves of a sine wave for each input cycle.

Half-wave rectifier A circuit that converts an alternating sine wave into a pulsating dc consisting of one-half of a sine wave for each input cycle.

Hole The absence of an electron in the valence band of an atom.

Integrated circuit (IC) A type of circuit in which all the components are constructed on a single tiny chip of silicon.

Intrinsic semiconductor A pure semiconductive material with relatively few free electrons.

LED (light-emitting diode) A type of diode that emits light when there is forward current.

Line regulation The change in output voltage for a given change in line (input) voltage, normally expressed as a percentage.

Load regulation The change in output voltage for a given change in load current, normally expressed as a percentage.

Majority carrier The most numerous charge carrier in a doped semiconductive material (either free electrons or holes).

Minority carrier The least numerous charge carrier in a doped semiconductive material (either free electrons or holes).

Photodiode A diode whose reverse resistance changes with incident light.

PIV (peak inverse voltage) The maximum value of reverse voltage which occurs at the peak of the input cycle when the diode is reverse-biased.

***PN* junction** The boundary between *n*-type and *p*-type semiconductive materials.

Regulator An electronic circuit that maintains an essentially constant output voltage with a changing input voltage or load.

Reverse bias The condition in which a diode prevents current.

Reverse breakdown The condition of a diode in which excessive reverse-bias voltage causes a rapid buildup of reverse current.

www.EngineeringBooksPdf.com

Silicon A semiconductive material used in diodes and transistors.

Varactor A diode that is used as a voltage-variable capacitor.

Zener diode A type of diode that operates in reverse breakdown (called zener breakdown) to provide voltage regulation.

FORMULAS

1	$V_{AVG} = \dfrac{V_{p(out)}}{\pi}$	Rectified half-wave average value
2	$V_{p(out)} = V_{p(in)} - 0.7\text{ V}$	Peak half-wave rectifier output voltage
3	$V_{AVG} = \dfrac{2V_{p(out)}}{\pi}$	Full-wave average value
4	$V_{P(out)} = \dfrac{nV_{P(in)}}{2}$	Peak full-wave rectifier output
5	$\text{PIV} = 2V_{p(out)}$	Diode peak inverse voltage, center-tapped rectifier
6	$V_{p(out)} = V_{p(sec)}$	Bridge full-wave output (without diode drops)
7	$\text{PIV} = V_{p(out)}$	Diode peak inverse voltage, bridge rectifier
8	$\text{PIV} = 2V_{p(in)}$	PIV, half-wave rectifier with capacitor-input filter
9	$r = \left(\dfrac{V_r}{V_{DC}}\right)100\%$	Ripple factor
10	$\text{Line regulation} = \left(\dfrac{\Delta V_{OUT}}{\Delta V_{IN}}\right)100\%$	Line regulation
11	$\text{Load regulation} = \left(\dfrac{V_{NL} - V_{FL}}{V_{FL}}\right)100\%$	Load regulation
12	$Z_Z = \dfrac{\Delta V_Z}{\Delta I_Z}$	Zener impedance
13	$C = \dfrac{A\varepsilon}{d}$	Capacitance formula

TRUE/FALSE QUIZ

Answers are at the end of the chapter.

1. Silicon can be doped with a trivalent material like aluminum to create an *n*-type material.
2. The minority carriers in an *n*-type material are holes.
3. Before a diode fully conducts, the bias must overcome the barrier potential.
4. When forward bias is applied to a diode, the depletion region widens.
5. The output frequency from a full-wave rectifier is the same as the input frequency.
6. The peak output voltage of a full-wave bridge rectifier is one-half the input voltage.
7. If one diode is open in a bridge rectifier, the output will drop to zero.
8. Line regulation specifies how much change occurs in the output voltage for a given change in the input voltage.
9. Normally, zener diodes, varactor diodes, and photodiodes are operated with reverse bias.
10. An application for a zener diode is to control the frequency in a voltage-controlled oscillator.

www.EngineeringBooksPdf.com

SELF-TEST

Answers are at the end of the chapter.

1. Atoms within a semiconductor crystal are held together by
   (a) atomic glue **(b)** subatomic particles **(c)** covalent bonds **(d)** the valence band
2. Free electrons exist in the
   (a) valence band **(b)** conduction band **(c)** lowest band **(d)** recombination band
3. A hole is
   (a) a vacancy in the valence band left by an electron
   (b) a vacancy in the conduction band
   (c) a positive electron
   (d) a conduction band electron
4. The process of adding impurity atoms to a pure semiconductor is called
   (a) recombination **(b)** crystalization **(c)** bonding **(d)** doping
5. The two types of current in a semiconductor are
   (a) positive current and negative current
   (b) electron current and conventional current
   (c) electron current and hole current
   (d) forward current and reverse current
6. The majority carriers in an *n*-type semiconductor are
   (a) electrons **(b)** holes **(c)** positive ions **(d)** negative ions
7. The *pn* junction is found in
   (a) diodes **(b)** silicon **(c)** all semiconductive material **(d)** answers (a) and (b)
8. In a diode, the region near the *pn* junction consisting of positive and negative ions is called the
   (a) neutral zone **(b)** recombination region
   (c) depletion region **(d)** diffusion area
9. A fixed dc voltage that sets the operating condition of a semiconductive device is called the
   (a) bias **(b)** depletion voltage
   (c) battery **(d)** barrier potential
10. In a diode, the two bias conditions are
    (a) positive and negative **(b)** blocking and nonblocking
    (c) open and closed **(d)** forward and reverse
11. When a diode is forward-biased, it is
    (a) blocking current **(b)** conducting current **(c)** similar to an open switch
    (d) similar to a closed switch **(e)** answers (a) and (c) **(f)** answers (b) and (d)
12. The voltage across a forward-biased silicon diode is approximately
    (a) 0.7 V **(b)** 0.3 V **(c)** 0 V **(d)** dependent on the bias voltage
13. The process of converting ac to pulsating dc is called
    (a) clipping **(b)** charging **(c)** rectification **(d)** filtering
14. The output frequency of a half-wave rectifier with a 60 Hz sinusoidal input is
    (a) 30 Hz **(b)** 60 Hz **(c)** 120 Hz **(d)** 0 Hz
15. The number of diodes used in a half-wave rectifier is
    (a) one **(b)** two **(c)** three **(d)** four
16. If a 75 V peak sine wave is applied to a half-wave rectifier, the peak inverse voltage across the diode is
    (a) 75 V **(b)** 150 V **(c)** 37.5 V **(d)** 0.7 V
17. The output frequency of a full-wave rectifier with a 60 Hz sinusoidal input is
    (a) 30 Hz **(b)** 60 Hz **(c)** 120 Hz **(d)** 0 Hz

www.EngineeringBooksPdf.com

18. Two types of full-wave rectifier are

(a) single diode and dual diode **(b)** primary and secondary

(c) forward-biased and reverse-biased **(d)** center-tapped and bridge

19. When a diode in a center-tapped rectifier opens, the output is

(a) 0 V **(b)** half-wave rectified **(c)** reduced in amplitude **(d)** unaffected

20. During the positive half-cycle of the input voltage in a bridge rectifier,

(a) one diode is forward-biased **(b)** all diodes are forward-biased

(c) all diodes are reverse-biased **(d)** two diodes are forward-biased

21. The process of changing a half-wave or a full-wave rectified voltage to a constant dc voltage is called

(a) filtering **(b)** ac to dc conversion **(c)** damping **(d)** ripple suppression

22. The small variation in the output voltage of a dc power supply is called

(a) average voltage **(b)** surge voltage **(c)** residual voltage **(d)** ripple voltage

23. The zener diode is designed to operate in

(a) zener breakdown **(b)** forward bias **(c)** saturation **(d)** cutoff

24. Zener diodes are sometimes used as

(a) current limiters **(b)** power distributors

(c) voltage references **(d)** variable resistors

25. Varactor diodes are used as variable

(a) resistors **(b)** current sources **(c)** inductors **(d)** capacitors

26. LEDs are based on the principle of

(a) forward bias **(b)** electroluminescence

(c) photon sensitivity **(d)** electron-hole recombination

27. In a photodiode, light produces

(a) reverse current **(b)** forward current **(c)** electroluminescence **(d)** dark current

PROBLEMS

Answers to odd-numbered problems are at the end of the chapter.

BASIC PROBLEMS

Use the practical diode model unless specified otherwise.

SECTION 1 Introduction to Semiconductors

1. List two semiconductive materials.

2. How many valence electrons do semiconductors have?

3. In a silicon crystal, how many covalent bonds does a single atom form?

4. What happens when heat is added to silicon?

5. Name the two energy levels at which current is produced in silicon.

6. Describe the process of doping and explain how it alters the atomic structure of silicon.

7. What type of impurity is antimony? What type of impurity is boron?

8. Explain what a hole is.

9. What is recombination?

SECTION 2 The Diode

10. How is the electric field across the *pn* junction created?

11. Because of its barrier potential, can a diode be used as a voltage source? Explain.

12. To forward-bias a diode, to which region must the positive terminal of a voltage source be connected?

13. Explain why a series resistor is necessary when a diode is forward-biased.

www.EngineeringBooksPdf.com

SECTION 3 Diode Characteristics

14. Explain how to generate the forward-bias portion of the characteristic curve.

15. What would cause the barrier potential to decrease from 0.7 V to 0.6 V?

16. Determine whether each diode in Figure 74 is forward-biased or reverse-biased.

17. Determine the voltage across each diode in Figure 74.

▶ FIGURE 74

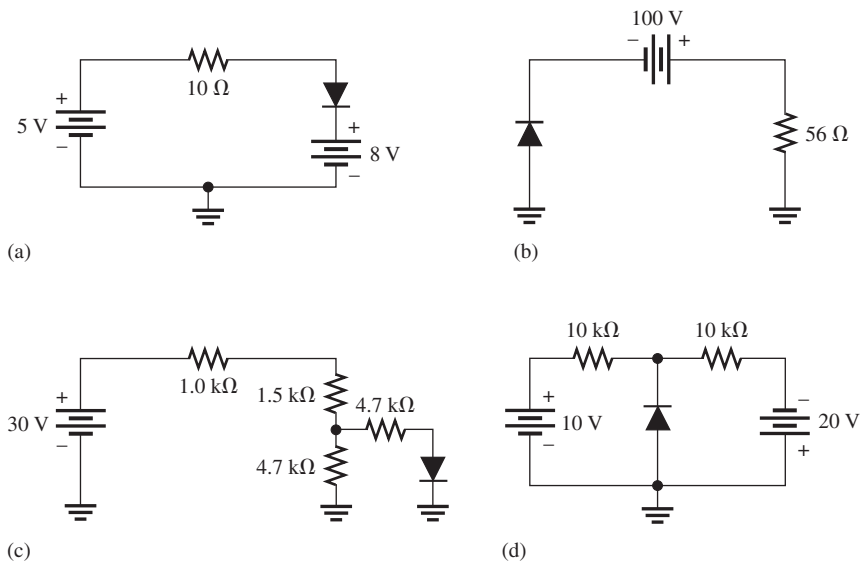

18. Examine the meter indications in each circuit of Figure 75, and determine whether the diode is functioning properly, or whether it is open or shorted.

▶ FIGURE 75

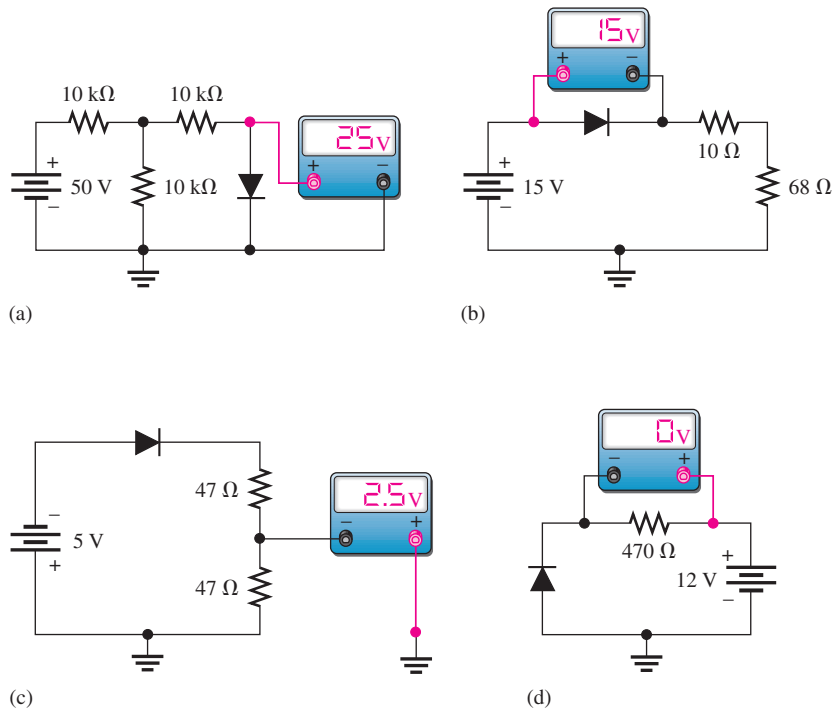

www.EngineeringBooksPdf.com

19. Determine the voltage with respect to ground at each point in Figure 76.

▶ FIGURE 76

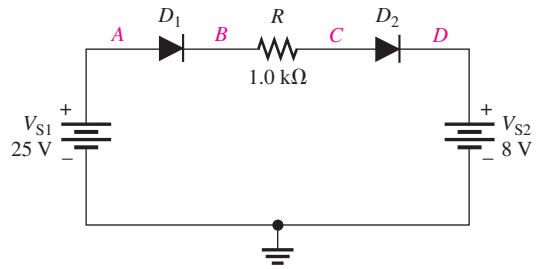

SECTION 4 Diode Rectifiers

20. Calculate the average value of a half-wave rectified voltage with a peak value of 200 V.

21. Draw the waveforms for the load current and voltage for Figure 77. Show the peak values.

22. Can a diode with a PIV rating of 50 V be used in the circuit of Figure 77?

23. Determine the peak voltage across R_L in Figure 78.

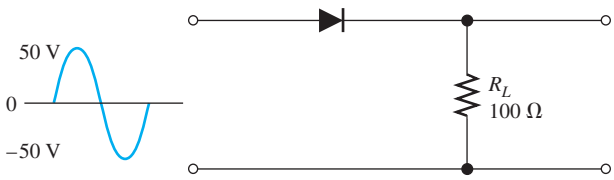

▲ FIGURE 77

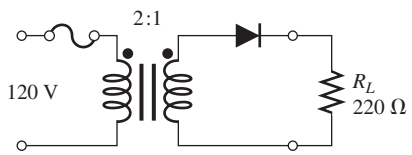

▲ FIGURE 78

24. Calculate the average value of a full-wave rectified voltage with a peak value of 75 V.

25. Consider the circuit in Figure 79.

(a) What type of circuit is this?

(b) What is the total peak secondary voltage?

(c) Find the peak voltage across each half of the secondary.

(d) Draw the voltage waveform across R_L.

(e) What is the peak current through each diode?

(f) What is the PIV for each diode?

▶ FIGURE 79

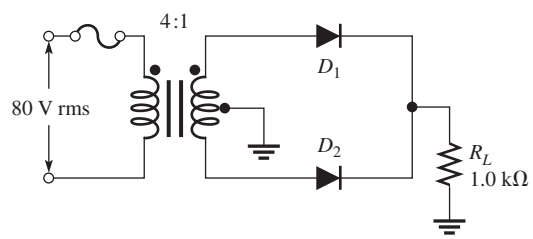

26. Calculate the peak voltage rating of each half of a center-tapped transformer used in a full-wave rectifier that has an average output voltage of 110 V.

27. Show how to connect the diodes in a center-tapped rectifier in order to produce a negative-going full-wave voltage across the load resistor.

www.EngineeringBooksPdf.com

28. What PIV rating is required for the diodes in a bridge rectifier that produces an average output voltage of 50 V?

SECTION 5 Power Supplies

29. The ideal dc output voltage of a capacitor-input filter is the (peak, average) value of the rectified input.

30. Refer to Figure 80 and draw the waveforms V_A and V_B with relation to the input waveform.

▶ FIGURE 80

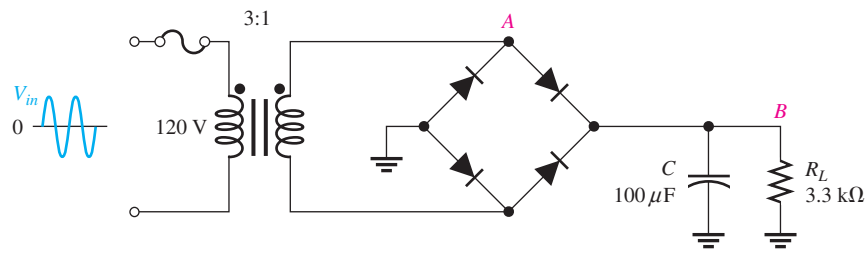

31. A certain voltage regulator has a no-load output voltage of 12.6 V and a full-load output voltage of 12.1 V. Determine the percent load regulation.

32. When the input voltage to a particular voltage regulator varies from 9.35 V to 6.48 V, the output voltage changes from 4.85 V to 4.65 V. Calculate the percent line regulation.

SECTION 6 Special-Purpose Diodes

33. A zener diode has a $V_Z = 7.5$ V and a $Z_Z = 5\ \Omega$. Draw the equivalent circuit.

34. The V_Z of a given zener diode changes 38 mV for a 1 mA change in I_Z. What is the zener impedance, Z_Z?

35. Figure 81 is a curve of reverse voltage versus capacitance for a certain varactor. Determine the change in capacitance if V_R varies from 5 V to 20 V.

36. Refer to Figure 81 and determine the value of V_R that produces 25 pF.

37. When the switch in Figure 82 is closed, will the microammeter reading increase or decrease? Assume that D_1 and D_2 are optically coupled.

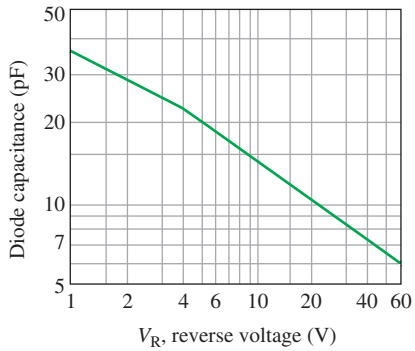

▲ FIGURE 81

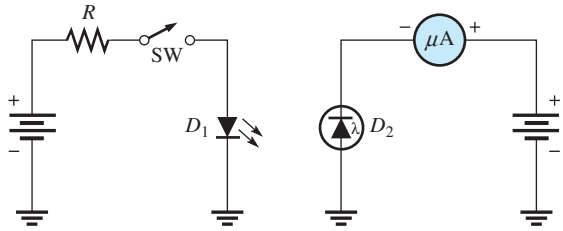

▲ FIGURE 82

38. With no incident light, there is a certain amount of reverse current in a photodiode. What is this current called?

www.EngineeringBooksPdf.com

SECTION 7 Troubleshooting

39. From the meter readings in Figure 83, determine if the rectifier is functioning properly. If it is not, determine the most likely failure(s). DMM1 is an ac voltmeter; DMM2 and DMM3 are dc voltmeters.

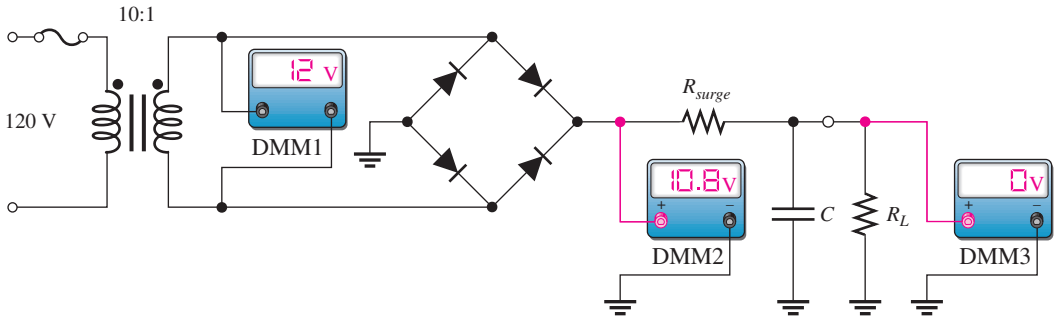

▲ FIGURE 83

40. Each part of Figure 84 shows oscilloscope displays of rectifier output voltages. In each case, determine whether or not the rectifier is functioning properly and, if it is not, identify the most likely failure(s).

▶ FIGURE 84

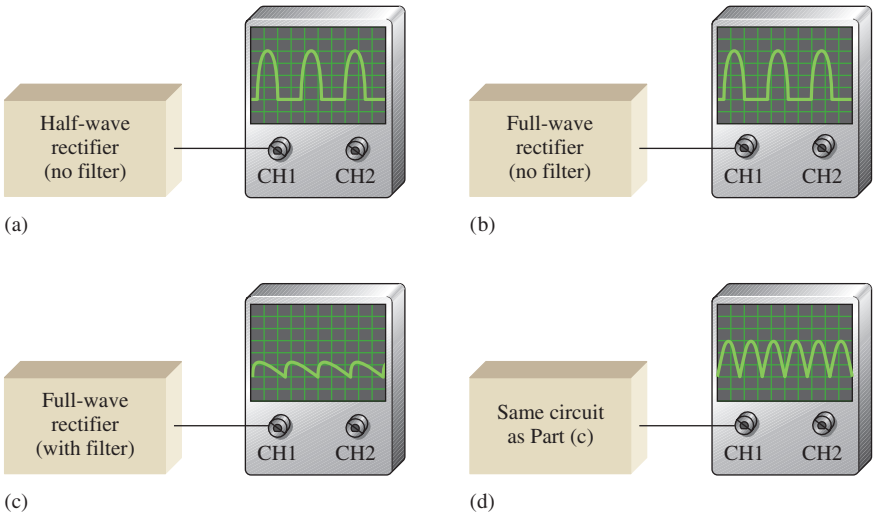

41. For each set of measured voltages at nodes 1 and 2 indicated in Figure 85, determine if they are correct, and if not, identify the most likely fault(s). State what you would do to correct the problem once it is isolated.

(a) $V_{pri} = 120\text{ V}, V_1 \cong 33\text{ V dc}, V_2 \cong 12\text{ V dc}$

(b) $V_{pri} = 120\text{ V}, V_1 \cong 33\text{ V dc}, V_2 \cong 33\text{ V dc}$

(c) $V_{pri} = 0\text{ V}, V_1 = 0\text{ V}, V_2 = 0\text{ V}$

(d) $V_{pri} = 120\text{ V}, V_1 \cong 33\text{ V}$ peak full-wave 120 Hz voltage, $V_2 \cong 12\text{ V}$ 120 Hz pulsating voltage

(e) $V_{pri} = 120\text{ V}, V_1 = 0\text{ V}, V_2 = 0\text{ V}$

www.EngineeringBooksPdf.com

▶ FIGURE 85

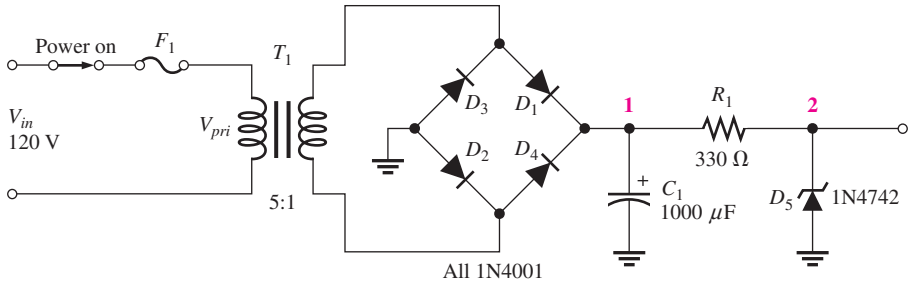

42. Determine the most likely failure in the circuit board of Figure 86 for each of the following symptoms. State the corrective action you would take in each case. The transformer has a turns ratio of 1.

(a) No voltage across the primary

(b) No voltage at point 2 with respect to ground; 120 V across the primary

(c) No voltage at point 3 with respect to ground; 120 V across the primary

(d) A pulsating full-wave rectified voltage with a peak of 170 V at point 4 with respect to ground

(e) Excessive 120 Hz ripple voltage at point 5 with respect to ground

(f) Ripple voltage has a frequency of 60 Hz at point 4 with respect to ground

(g) No voltage at point 6 with respect to ground

▶ FIGURE 86

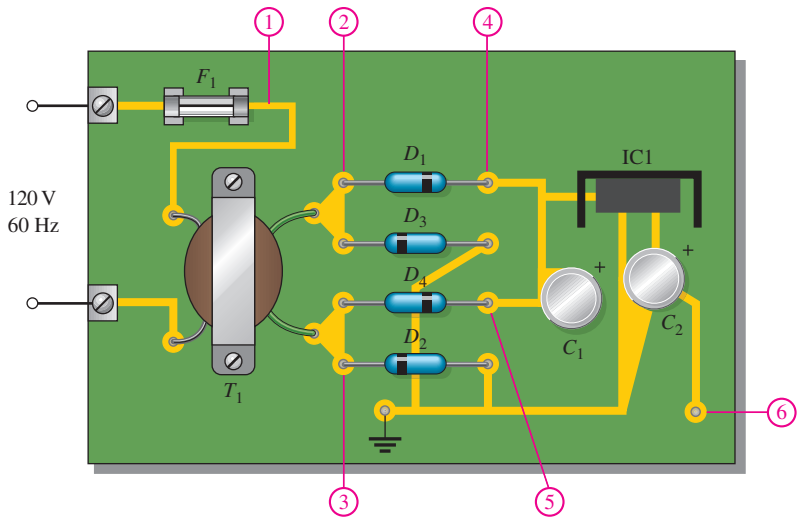

MULTISIM TROUBLESHOOTING PROBLEMS

43. Open file P16-43; files are found at www.pearsonhighered.com/floyd/. Determine if there is a fault. If so, identify it.

44. Open file P16-44 and determine if there is a fault. If so, identify it.

45. Open file P16-45 and determine if there is a fault. If so, identify it.

46. Open file P16-46 and determine if there is a fault. If so, identify it.

47. Open file P16-47 and determine if there is a fault. If so, identify it.

48. Open file P16-48 and determine if there is a fault. If so, identify it.

49. Open file P16-49 and determine if there is a fault. If so, identify it.

www.EngineeringBooksPdf.com

50. Open file P16-50 and determine if there is a fault. If so, identify it.

51. Open file P16-51 and determine if there is a fault. If so, identify it.

52. Open file P16-52 and determine if there is a fault. If so, identify it.

ANSWERS

SECTION REVIEWS

SECTION 1 Introduction to Semiconductors

1. Covalent bonds are formed by the sharing of valence electrons with neighboring atoms.
2. An intrinsic material is one that is in a pure state.
3. A crystal is a solid material formed by atoms bonding together in a fixed pattern.
4. There are eight shared valence electrons in each atom of a silicon crystal.
5. Free electrons exist in the conduction band; valence electrons exist in the valence band.
6. A hole is created when an electron is thermally raised to the conduction band, leaving a hole in the valence band.
7. The energy gap between the valence band and the conduction band is narrower for a semiconductor than for an insulator.
8. An *n*-type semiconductor is formed by the addition of pentavalent atoms to the intrinsic semiconductor.
9. A *p*-type semiconductor is formed by the addition of trivalent atoms to the intrinsic semiconductor.
10. Majority carriers are electrons in an *n*-type material and holes in a *p*-type material.

SECTION 2 The Diode

1. A *pn* junction is the boundary between *n*-type and *p*-type materials.
2. The depletion region is devoid of majority carriers and contains only positive and negative ions.
3. True
4. The barrier potential for silicon is 0.7 V.
5. Two bias conditions are forward and reverse.
6. Forward bias produces majority carrier current.
7. Reverse bias causes the depletion area to widen.
8. True

SECTION 3 Diode Characteristics

1. See Figure 87.

▶ FIGURE 87

2. True
3. reverse; forward
4. The practical model includes the barrier potential.

SECTION 4 Diode Rectifiers

1. The PIV occurs at 270°, the peak of the negative alternation of the input cycle.
2. There is load current for 50% of the input cycle.
3. $V_{AVG} = V_{p(out)}/\pi = 3.18\text{ V}$
4. $V_{AVG} = 2V_{p(out)}/\pi = 38.2\text{ V}$

www.EngineeringBooksPdf.com

5. A bridge rectifier has the greater V_{out}.
6. True

SECTION 5 Power Supplies

1. Ripple voltage is caused by the capacitor charging and discharging slightly.
2. Reducing load resistance increases ripple voltage.
3. Better ripple rejection, line and load regulation, thermal protection.
4. *Line regulation:* Constant output voltage with varying input voltage.
   Load regulation: Constant output voltage with varying load current.

SECTION 6 Special-Purpose Diodes

1. True
2. $V_Z = 10\text{ V} + (30\text{ mA})(8\ \Omega) = 10.2\text{ V}$
3. A varactor acts as a variable capacitor.
4. Diode capacitance decreases when reverse voltage is increased.
5. LEDs give off light when forward-biased; photodiodes respond to light when reverse-biased.
6. Dark current is the small photodiode reverse current with no light.

SECTION 7 Troubleshooting

1. An open diode results in no output voltage.
2. An open diode produces a half-wave output voltage.
3. The shorted diode may burn open. Transformer will be damaged. Fuse will blow.
4. The amplitude of the ripple voltage increases with a leaky filter capacitor.
5. There will be no output voltage when the primary opens.
6. The problem may be a partially shorted secondary winding.

RELATED PROBLEMS FOR EXAMPLES

1 3.82 V
2 2.3 V
3 98.7 V
4 12.8 V
5 370 V
6 $V_{p(out)} = 170\text{ V}; \text{PIV} = 170\text{ V}$
7 3.8%
8 5 Ω
9 Verify *C* is shorted and replace it.

TRUE/FALSE QUIZ

1. F **2.** T **3.** T **4.** F **5.** F **6.** F **7.** F **8.** T **9.** T **10.** F

SELF-TEST

1. (c) **2.** (b) **3.** (a) **4.** (d) **5.** (c) **6.** (a) **7.** (a)
8. (c) **9.** (a) **10.** (d) **11.** (f) **12.** (a) **13.** (c) **14.** (b)
15. (a) **16.** (a) **17.** (c) **18.** (d) **19.** (b) **20.** (d) **21.** (a)
22. (d) **23.** (a) **24.** (c) **25.** (d) **26.** (b) **27.** (a)

www.EngineeringBooksPdf.com

PROBLEMS – ODD-NUMBERED ANSWERS

1. Silicon, germanium

3. Four

5. Conduction band, valence band

7. Antimony is an *n*-type impurity. Boron is a *p*-type impurity.

9. Recombination is the process in which an electron that has crossed the *pn* junction recombines with a hole in the *p* region, creating a negative ion.

11. A diode cannot be used as a voltage source. The potential opposes current and produces an equilibrium condition, not a source of energy.

13. A series resistor is necessary to limit the diode current during forward bias to prevent overheating.

15. An increase in junction temperature

17. **(a)** $V_R = 3$ V
(b) $V_F = 0.7$ V
(c) $V_F = 0.7$ V
(d) $V_F = 0.7$ V

19. $V_A = 25$ V; $V_B = 24.3$ V; $V_C = 8.7$ V; $V_D = 8$ V

21. $V_{L(\text{peak})} = 49.3$ V
$I_{L(\text{peak})} = 493$ mA
See Figure P–25.

▶ **FIGURE P–25**

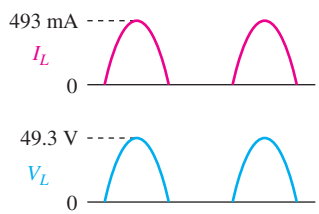

23. $V_{RL(peak)} = 84.9$ V

25. **(a)** Center-tapped full-wave rectifier
(b) 28.3 V
(c) 14.2 V
(d) See Figure P–26.
(e) 13.5 mA
(f) 27.0 V

▶ **FIGURE P–26**

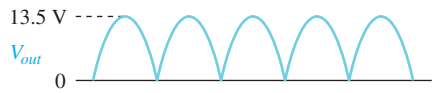

www.EngineeringBooksPdf.com

27. See Figure P–27.

▶ FIGURE P–27

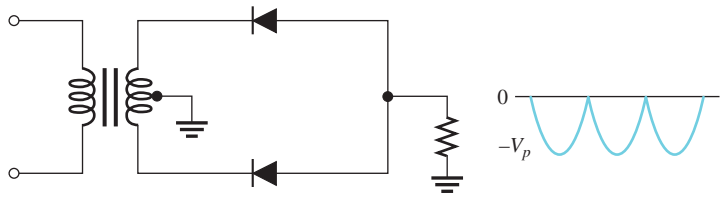

29. Peak

31. 4.13%

33. See Figure P–28.

▶ FIGURE P–28

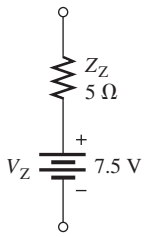

35. A decrease of 9 pF

37. Increase

39. C or R_L is shorted or R_{surge} is open.

41. **(a)** Readings are correct.

(b) Zener diode is open.

(c) Fuse is blown or switch is open.

(d) C_1 is open.

(e) Transformer winding is open or the bridge is open.

43. The diode is open.

45. No fault

47. D_1 is leaky.

49. D_2 is open.

51. No fault

PHOTO CREDITS FOR REOCCURRING IMAGES

CD Icon: Stockbyte/Getty Images; **Computer Chips:** Photodisc/Thinkstock; **Computer:** Jeff Maloney/Photodisc/Getty Images; **Fiber Optic:** discpicture/Shutterstock.

www.EngineeringBooksPdf.com

This page intentionally left blank

www.EngineeringBooksPdf.com

Transistors and Applications

From Chapter 17 of *Electronics Fundamentals: Circuits, Devices, and Applications*, Eighth Edition, Thomas L. Floyd, David M. Buchla.
Copyright © 2010 by Pearson Education, Inc. Published by Pearson Prentice Hall. All rights reserved.

www.EngineeringBooksPdf.com

Transistors and Applications

CHAPTER OUTLINE

1 DC Operation of Bipolar Junction Transistors (BJTs)
2 BJT Class A Amplifiers
3 BJT Class B Amplifiers
4 The BJT as a Switch
5 DC Operation of Field-Effect Transistors (FETs)
6 FET Amplifiers
7 Feedback Oscillators
8 Troubleshooting
Application Assignment: Putting Your Knowledge to Work

CHAPTER OBJECTIVES

- Describe the basic structure and operation of bipolar junction transistors
- Explain the operation of a BJT class A amplifier
- Analyze class B amplifiers
- Analyze a transistor switching circuit
- Describe the basic structure and operation of JFETs and MOSFETs
- Analyze two types of FET amplifier configurations
- Discuss the theory and analyze the operation of several types of oscillators
- Troubleshoot amplifier circuits

KEY TERMS

- Transistor
- Bipolar junction transistor (BJT)
- Emitter
- Base
- Collector
- Bipolar
- Class A amplifier
- Saturation
- Cutoff
- Q-point
- Amplification
- Common-emitter (CE)
- Voltage gain
- Current gain
- Power gain
- Common-collector (CC)
- Class B amplifier
- JFET
- Drain
- Source
- Gate
- MOSFET
- Depletion mode
- Enhancement mode
- Common-source (CS)
- Common-drain (CD)
- Oscillator
- Feedback

APPLICATION ASSIGNMENT PREVIEW

You will analyze and troubleshoot a particular transistor circuit in a system that produces a dc output voltage proportional to the temperature of the substance in the tank. This circuit uses the variable resistance of a temperature sensor as part of its bias circuit. The output of this temperature detector circuit is converted to digital form for precise control of the burner that heats the tank. If the temperature of the substance tends to increase above a certain value, the circuitry causes less fuel to be fed to the burner and thus reduces the temperature. If the temperature tends to decrease, the circuitry causes more fuel to be fed to the burner and thus raises the temperature. This type of system maintains the substance at a nearly constant temperature and is typical of many industrial process-control systems. After studying this chapter, you should be able to complete the application assignment.

VISIT THE COMPANION WEBSITE

Study aids for this chapter are available at http://www.pearsonhighered.com/floyd/

INTRODUCTION

Two basic types of transistors will be discussed in this chapter: the bipolar junction transistor (BJT) and the field-effect transistor (FET). The two major application areas of amplification and switching are introduced.

Streeter Photography/Alamy

www.EngineeringBooksPdf.com

1 DC OPERATION OF BIPOLAR JUNCTION TRANSISTORS (BJTs)

A **transistor** is a semiconductor device that controls current between two terminals based on the current or voltage at a third terminal and is used for the amplification or switching of electrical signals. The basic structure of the bipolar junction transistor, BJT, determines its operating characteristics. DC bias is important to the operation of transistors in terms of setting up proper currents and voltages in a transistor circuit. Two important parameters are α_{DC} and β_{DC}.

After completing this section, you should be able to

- **Describe the basic structure and operation of bipolar junction transistors**
  - Explain the difference between *npn* and *pnp* transistors
  - Explain transistor biasing
  - Discuss transistor currents and their relationships
  - Define β_{DC}
  - Discuss the transistor voltages
  - Calculate dc bias currents and voltages in a basic transistor circuit

The **bipolar junction transistor (BJT)** is constructed with three doped semiconductor regions separated by two *pn* junctions, as shown in the epitaxial planar structure in Figure 1(a). The three regions are called **emitter**, **base**, and **collector**. Representations of the two types of bipolar transistors are shown in Figure 1(b) and (c). One type consists of two *n* regions separated by a *p* region (*npn*), and the other consists of two *p* regions separated by an *n* region (*pnp*).

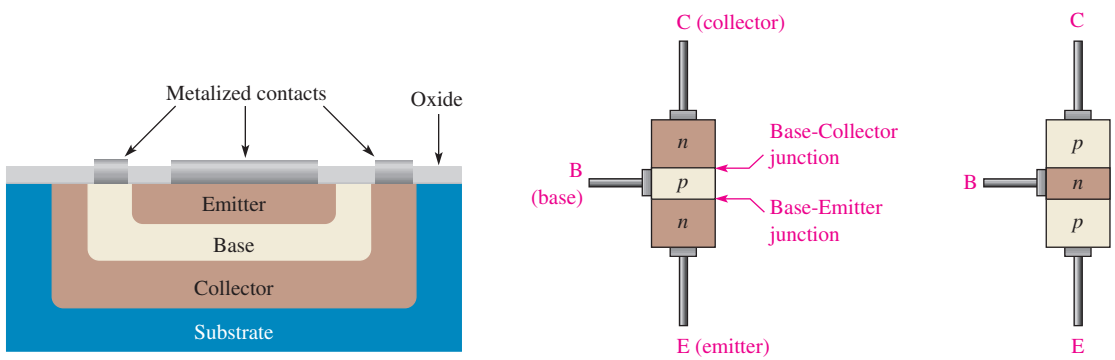

(a) Basic epitaxial planar structure (b) *npn* (c) *pnp*

▲ **FIGURE 1**

Basic construction of bipolar junction transistors.

The *pn* junction joining the base region and the emitter region is called the *base-emitter junction.* The junction joining the base region and the collector region is called the *base-collector* junction, as indicated in Figure 1(b). A wire lead connects to each of the three regions, as shown. These leads are labeled E, B, and C for emitter, base, and collector, respectively. The base material is lightly doped and very narrow compared to the heavily doped emitter and collector materials.

This icon indicates selected websites for further information on topics in this section. See the Companion Website provided with this text.

www.EngineeringBooksPdf.com

Figure 2 shows the schematic symbols for the *npn* and *pnp* bipolar transistors. Notice that the emitter terminal has an arrow. The term **bipolar** refers to the use of both holes and electrons as charge carriers in the transistor structure. Although both *pnp* and *npn* transistors are commonly used, the *npn* will be predominately used to illustrate concepts in this chapter.

▶ FIGURE 2

Transistor symbols.

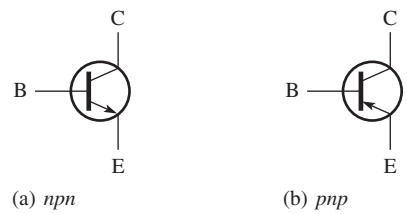

Transistor Biasing

In order for a transistor to operate properly as an amplifier, the two *pn* junctions must be correctly biased with external dc voltages. Figure 3 shows the proper bias arrangement for both *npn* and *pnp* transistors. Notice that in both cases the base-emitter (BE) junction is forward-biased and the base-collector (BC) junction is reverse-biased. This is called *forward-reverse bias.*

▶ FIGURE 3

Forward-reverse bias of a BJT.

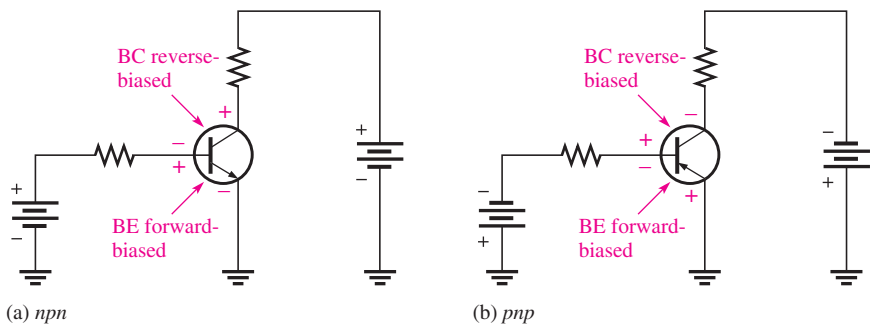

Transistor Currents

The directions of current in an *npn* and a *pnp* transistor are as shown in Figure 4(a) and 4(b), respectively. An examination of these diagrams shows that the emitter current is the sum of the collector and base currents, expressed as follows:

Equation 1

$$I_E = I_C + I_B$$

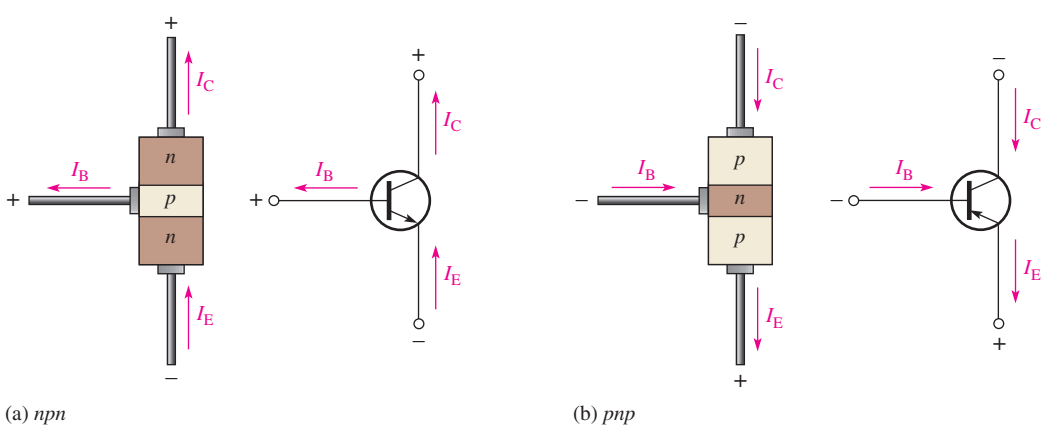

▲ FIGURE 4

Transistor currents.

www.EngineeringBooksPdf.com

As mentioned before, I_B is very small compared to I_E or I_C. The capital-letter subscripts indicate dc values.

These direct currents (emitter, base, and collector) are also related by two parameters: the dc **alpha** (α_{DC}), which is the ratio I_C/I_E and the dc **beta** (β_{DC}), which is the ratio I_C/I_B. β_{DC} is the direct current gain and is usually designated as h_{FE} on the transistor data sheets.

The collector current is equal to α_{DC} times the emitter current.

$$I_C = \alpha_{DC} I_E \qquad \text{Equation 2}$$

where α_{DC} typically has a value between 0.950 and 0.995. Generally α_{DC} can be considered to be approximately 1 and therefore $I_C \cong I_E$.

The collector current is equal to the base current multiplied by β_{DC}.

$$I_C = \beta_{DC} I_B \qquad \text{Equation 3}$$

where β_{DC} typically has a value between 20 and 300, depending on the type of transistor. Some specialized transistors can have much higher values.

Transistor Voltages

The three dc voltages for the biased transistor in Figure 5 are the emitter voltage (V_E), the collector voltage (V_C), and the base voltage (V_B). These voltages are with respect to ground. The collector voltage is equal to the dc supply voltage, V_{CC}, less the drop across R_C.

$$V_C = V_{CC} - I_C R_C \qquad \text{Equation 4}$$

The base voltage is equal to the emitter voltage plus the base-emitter junction barrier potential (V_{BE}), which is about 0.7 V for a silicon transistor.

$$V_B = V_E + V_{BE} \qquad \text{Equation 5}$$

In the configuration of Figure 5, the emitter is the common (grounded) terminal, so $V_E = 0$ V and $V_B = 0.7$ V.

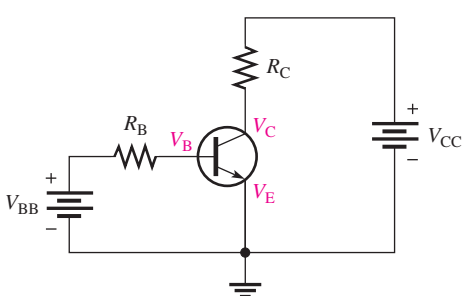

◀ FIGURE 5

Bias voltages.

Voltage-Divider Bias

The two dc bias sources can be replaced by a single dc source and a resistive voltage divider. Although there are other bias methods, this one is the most widely used.

The voltage-divider bias configuration uses a single dc source to provide forward-reverse bias to the transistor, as shown in Figure 6. Resistors R_1 and R_2 form a voltage divider that provides the base bias voltage. Resistor R_E allows the emitter to rise above ground potential.

The voltage divider bias provides a very small base current to the transistor compared to the bias current. For a properly designed circuit, the loading effect is negligible and can be ignored.

The input resistance at the transistor base depends on β_{DC} and is approximately

$$R_{IN} \cong \beta_{DC} R_E \qquad \text{Equation 6}$$

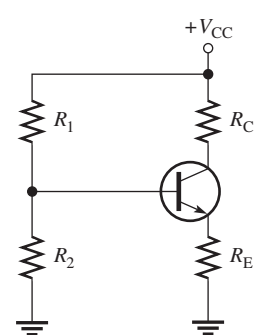

▲ FIGURE 6

Voltage-divider bias.

www.EngineeringBooksPdf.com

Base Voltage

Using the voltage-divider formula, you get the following equation for the approximate base voltage for the circuit in Figure 6:

Equation 7

$$V_B \cong \left(\frac{R_2}{R_1 + R_2}\right)V_{CC}$$

Once you have determined the base voltage, you can determine the emitter voltage V_E (for an *npn* transistor).

Equation 8

$$V_E = V_B - 0.7\text{ V}$$

EXAMPLE 1

Determine V_B, V_E, V_C, V_{CE}, I_B, I_E, and I_C in Figure 7. The 2N3904 is a general-purpose transistor with a typical $\beta_{DC} = 200$.

▶ FIGURE 7

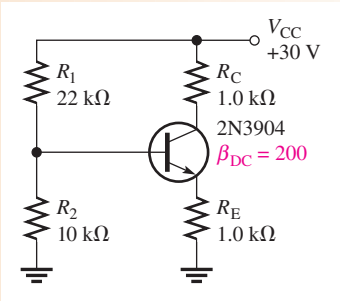

Solution The base voltage is approximately

$$V_B \cong \left(\frac{R_2}{R_1 + R_2}\right)V_{CC} = \left(\frac{10\text{ k}\Omega}{32\text{ k}\Omega}\right)30\text{ V} = \mathbf{9.38\ V}$$

Therefore,

$$V_E = V_B - 0.7\text{ V} = \mathbf{8.68\ V}$$

Now that you know V_E, you can find I_E by Ohm's law.

$$I_E = \frac{V_E}{R_E} = \frac{8.68\text{ V}}{1.0\text{ k}\Omega} = \mathbf{8.68\ mA}$$

Since α_{DC} is so close to 1 for most transistors, it is a good approximation to assume that $I_C \cong I_E$. Thus,

$$I_C \cong \mathbf{8.68\ mA}$$

Use $I_C = \beta_{DC}I_B$ and solve for I_B.

$$I_B = \frac{I_C}{\beta_{DC}} = \frac{8.68\text{ mA}}{200} = \mathbf{43.4\ \mu A}$$

Since you know I_C, you can find V_C.

$$V_C = V_{CC} - I_CR_C = 30\text{ V} - (8.68\text{ mA})(1.0\text{ k}\Omega) = 30\text{ V} - 8.68\text{ V} = \mathbf{21.3\ V}$$

Since V_{CE} is the collector-to-emitter voltage, it is the difference of V_C and V_E.

$$V_{CE} = V_C - V_E = 21.3\text{ V} - 8.68\text{ V} = \mathbf{12.6\ V}$$

www.EngineeringBooksPdf.com

*Related Problem** Determine V_B, V_E, V_C, V_{CE}, I_B, I_E, and I_C if V_{CC} is changed to 15 V in Figure 7.

Open Multisim file E17-01; files are found at www.pearsonhighered.com/floyd/. Measure all of the transistor currents and the terminal voltages.

*Answers are at the end of the chapter.

SECTION 1 CHECKUP
Answers are at the end of the chapter.

1. Name the three regions of a bipolar junction transistor.
2. Define *forward-reverse bias.*
3. What is β_{DC}?
4. If I_B is 10 μA and β_{DC} is 100, what is the collector current?
5. How many dc voltage sources are required for voltage-divider bias?
6. In Figure 7, if R_2 is 4.7 kΩ, what is the value of V_B?

2 BJT CLASS A AMPLIFIERS

DC bias allows a transistor to operate as an amplifier. In a **class A amplifier**, the transistor conducts for the full cycle of the input signal (360°). Thus, a transistor can be used to produce a larger ac signal using a smaller ac signal as a "pattern." In this section, we will discuss how a transistor acts as an amplifier and examine a basic amplifier.

After completing this section, you should be able to

- **Explain the operation of a BJT class A amplifier**
  - Discuss the collector characteristic curves
  - Define *cutoff* and *saturation*
  - Analyze the dc load line operation of an amplifier
  - Discuss the significance of the Q-point
  - Explain the signal operation of an amplifier
  - Calculate the voltage, current, and power gains of common-emitter and common-collector amplifiers
  - Explain the use of coupling and bypass capacitors

Let's examine the factors important in the operation of a transistor class A **amplifier**. Generally, class A amplifiers are used in low-power applications where power levels are generally less than 1 W.

Collector Characteristic Curves

Using a circuit like that shown in Figure 8(a), you can generate a set of *collector characteristic curves* that show how the collector current, I_C, varies with the collector-to-emitter voltage, V_{CE}, for specified values of base current, I_B. Notice in the circuit diagram that both V_{BB} and V_{CC} are variable sources of voltage.

www.EngineeringBooksPdf.com

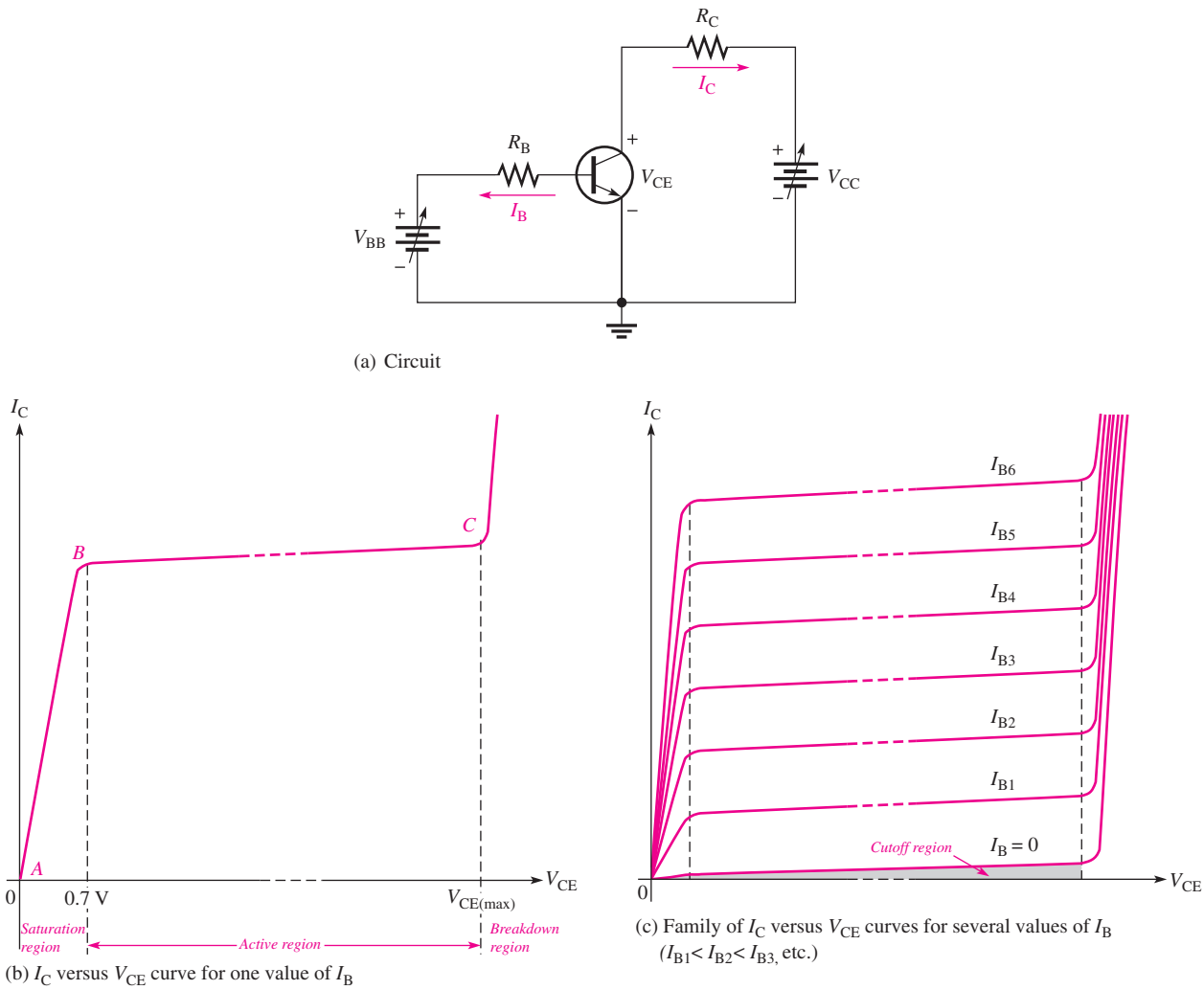

▲ **FIGURE 8**

Collector characteristic curves.

Assume that V_{BB} is set to produce a certain value of I_B and V_{CC} is zero. For this condition, both the base-emitter junction and the base-collector junction are forward-biased because the base is at approximately 0.7 V while the emitter and the collector are at 0 V. Most of the base current is through the base-emitter junction because of the low impedance path to ground. When both junctions are forward-biased, the transistor is in the **saturation** region of its operation.

As V_{CC} is increased, V_{CE} increases gradually as the collector current increases. This is indicated by the portion of the characteristic curve between points *A* and *B* in Figure 8(b). I_C increases as V_{CC} is increased because V_{CE} remains less than 0.7 V due to the forward-biased base-collector junction.

Ideally, when V_{CE} exceeds 0.7 V, the base-collector junction becomes reverse-biased and the transistor goes into the *active* or **linear** region of its operation. Once the base-collector junction is reverse-biased, I_C levels off and remains essentially constant for a given value of I_B as V_{CE} continues to increase. Actually, I_C increases very slightly as V_{CE} increases due to widening of the base-collector depletion region. This results in fewer holes for recombination in the base region, which effectively causes a slight increase in β_{DC}. This is shown by the portion of the characteristic curve between points *B* and *C* in Figure 8(b). For this portion of the characteristic curve, the value of I_C is determined only by the relationship expressed as $I_C = \beta_{DC} I_B$.

www.EngineeringBooksPdf.com

When V_{CE} reaches a sufficiently high voltage, the reverse-biased base-collector junction goes into breakdown; and the collector current increases rapidly as indicated by the part of the curve to the right of point *C* in Figure 8(b). A transistor should never be operated in this breakdown region.

A family of collector characteristic curves is produced when I_C versus V_{CE} is plotted for several values of I_B, as illustrated in Figure 8(c). When $I_B = 0$, the transistor is in the **cutoff** region although there is a very small collector leakage current as indicated. The amount of collector leakage current for $I_B = 0$ is exaggerated on the graph for purposes of illustration.

EXAMPLE 2

Draw the family of collector characteristic curves for the circuit in Figure 9 for $I_B = 5\ \mu A$ to $25\ \mu A$ in $5\ \mu A$ increments. Assume that $\beta_{DC} = 100$.

▶ FIGURE 9

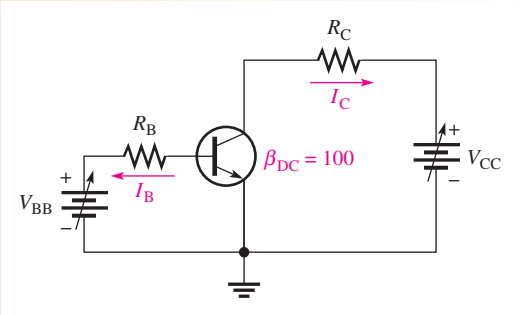

Solution Using the relationship $I_C = \beta_{DC} I_B$, you can calculate the ideal values of I_C and tabulate as in Table 1.

The resulting curves are plotted in Figure 10. Generally, characteristic curves have a slight upward slope as shown. This indicates that, for a given value of I_B, I_C increases slightly as V_{CE} increases, which implies β_{DC} is not exactly constant.

▼ TABLE 1

I_B	I_C
5 μA	0.5 mA
10 μA	1.0 mA
15 μA	1.5 mA
20 μA	2.0 mA
25 μA	2.5 mA

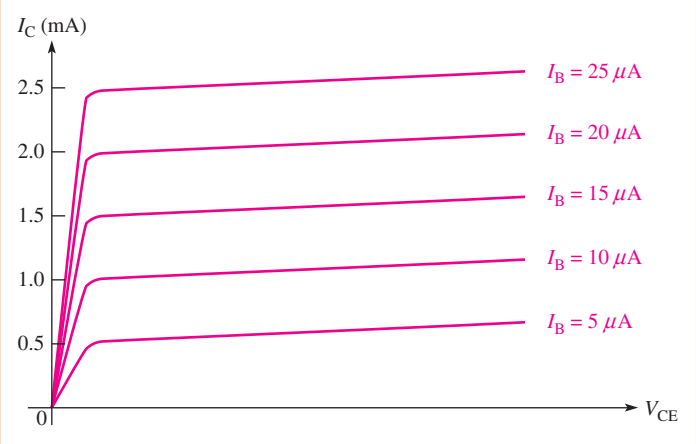

▲ FIGURE 10

Related Problem Where would the curve for $I_B = 0$ appear on the graph in Figure 10?

Cutoff and Saturation As previously mentioned, when $I_B = 0$, the transistor is in cutoff. Under this condition, there is a very small amount of collector leakage current, I_{CEO}, due mainly to thermally produced carriers. In cutoff, both the base-emitter and the base-collector junctions are reverse-biased.

www.EngineeringBooksPdf.com

Now let's consider the condition known as saturation. When the base current is increased, the collector current also increases and V_{CE} decreases as a result of more drop across R_C. When V_{CE} reaches a value called $V_{CE(sat)}$, the base-collector junction becomes forward-biased and I_C can increase no further even with a continued increase in I_B. At the point of saturation, the relation $I_C = \beta_{DC} I_B$ is no longer valid.

For a transistor, $V_{CE(sat)}$ occurs somewhere below the knee of the collector curves and is usually only a few tenths of a volt. Usually, $V_{CE(sat)}$ is assumed to be zero for analysis purposes, so a saturated transistor ideally acts as a short from collector to emitter.

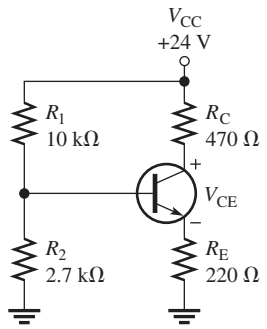

▲ FIGURE 11

Load Line Operation A straight line drawn on the collector curves between the cutoff and saturation points of the transistor is called the *load line.* Once set up, the transistor always operates along this line. Thus, any value of I_C and the corresponding V_{CE} will fall on this line. Notice that the load line is determined by the collector circuit resistance and V_{CC} and not by the transistor itself.

Now let's set up a dc load line for the circuit in Figure 11. First determine the cutoff point on the load line. When the transistor is in cutoff, there is essentially no collector current. Thus, the collector-emitter voltage, V_{CE}, is equal to V_{CC}. In this case, $V_{CE} = 24$ V.

Next, determine the saturation point on the load line. When the transistor is saturated, V_{CE} is approximately zero. (Actually, it is usually a few tenths of a volt, but zero is a good approximation.) Therefore, all the V_{CC} voltage is dropped across $R_C + R_E$. From this you can determine the saturation value of collector current, $I_{C(sat)}$. This value is the maximum value for I_C. You cannot possibly increase it further without changing V_{CC}, R_C, or R_E. In Figure 11, the value of $I_{C(sat)}$ is $V_{CC}/(R_C + R_E)$, which is 34.8 mA.

Finally, the cutoff and saturation points are plotted on the characteristic curves in Figure 12, and a straight line, which is the dc load line, is drawn between them.

▶ FIGURE 12

DC load line (gold) for the circuit in Figure 11.

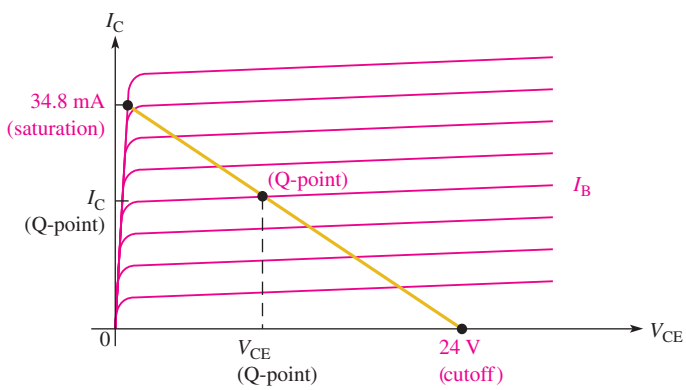

Q-Point The base current, I_B, is established by the base bias. The point at which the base current curve intersects the dc load line is the *quiescent* or **Q-point** for the circuit. The coordinates of the Q-point are the values for I_C and V_{CE} at that point, as illustrated in Figure 12.

Signal (ac) Operation of an Amplifier

The circuit in Figure 13 produces an output signal with the same waveform as the input signal but with a greater amplitude. This increase is called **amplification**. The figure shows an input signal, V_{in}, capacitively coupled to the base. The collector voltage is the output signal, as indicated. The input signal voltage causes the base current to vary at the same frequency above and below its dc value. This variation in base current produces a corresponding variation in collector current. However, the variation in collector current is much larger than the variation in base current because of the current **gain** through the

www.EngineeringBooksPdf.com

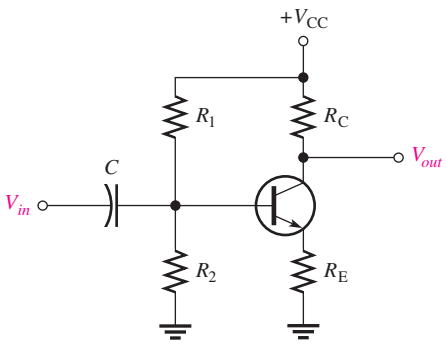

FIGURE 13

An amplifier with voltage-divider bias with capacitively coupled input signal. V_{in} and V_{out} are with respect to ground.

transistor. The ratio of the ac collector current (I_c) to the ac base current (I_b) is designated β_{ac} (the ac beta) or h_{fe}.

$$\beta_{ac} = \frac{I_c}{I_b}$$ **Equation 9**

The value of β_{ac} differs only slightly from that of β_{DC} for a given transistor and data sheets do not always show this parameter. Remember that lowercase subscripts distinguish ac currents and voltages from dc currents and voltages.

Signal Voltage Gain of an Amplifier Now let's take the amplifier in Figure 13 and examine its voltage gain with a signal input. The output voltage is the collector voltage. The variation in collector current produces a variation in the voltage across R_C and a resulting variation in the collector voltage, as shown in Figure 14.

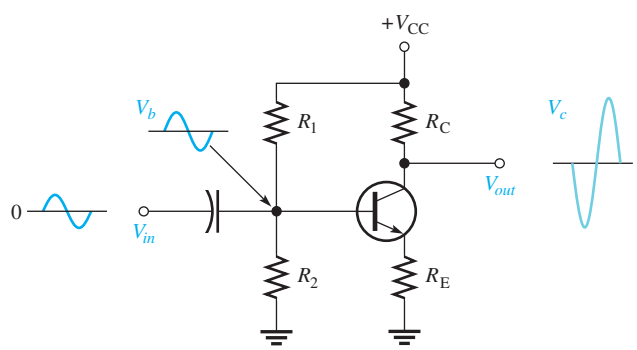

FIGURE 14

Voltage amplification.

As the collector current increases, the I_cR_C drop increases. The increase produces a decrease in collector voltage because $V_c = V_{CC} - I_cR_C$. Likewise, as the collector current decreases, the I_cR_C drop decreases and produces an increase in collector voltage. Therefore, there is a 180° phase difference between the collector current and the collector voltage. The base voltage and collector voltage are also 180° out of phase, as indicated in Figure 14. This 180° phase difference between input and output is called an *inversion.*

The voltage gain, A_v, of the amplifier is V_{out}/V_{in}, where V_{out} is the signal voltage at the collector and V_{in} is the signal voltage at the base. Because the base-emitter junction is forward-biased, the signal voltage at the emitter is approximately equal to the signal voltage at the base. Thus, since $V_b \cong V_e$, the gain is approximately $V_c/V_e = I_cR_C/I_eR_E$. Because the α_{ac} is close to 1, I_c and I_e are very close to the same value. Therefore, they cancel, giving the voltage gain formula for the amplifier in Figure 14:

$$A_v \cong \frac{R_C}{R_E}$$ **Equation 10**

A negative sign on A_v is often used to indicate the inversion between input and output.

www.EngineeringBooksPdf.com

EXAMPLE 3

In Figure 15, a signal voltage of 50 mV rms is applied to the base.

(a) Determine the output signal voltage for the amplifier.

(b) Find the dc collector voltage on which the output signal voltage is riding.

(c) Draw the output waveform.

▶ **FIGURE 15**

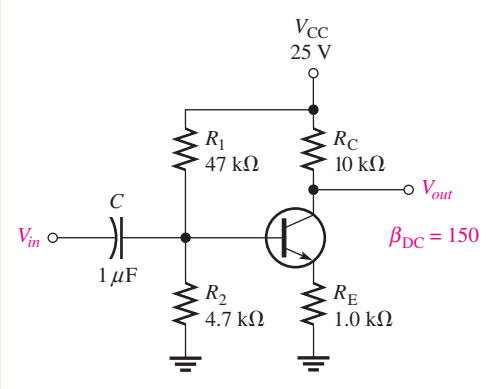

Solution **(a)** The signal voltage gain is

$$A_v \cong \frac{R_C}{R_E} = \frac{10\text{ k}\Omega}{1.0\text{ k}\Omega} = 10$$

The output signal voltage is the input signal voltage times the voltage gain.

$$V_{out} = A_v V_{in} = (10)(50\text{ mV}) = \mathbf{500\ mV\ rms}$$

(b) Next find the dc collector voltage.

$$V_B \cong \left(\frac{R_2}{R_1 + R_2}\right)V_{CC} = \left(\frac{4.7\text{ k}\Omega}{51.7\text{ k}\Omega}\right)25\text{ V} = 2.27\text{ V}$$

$$I_C \cong I_E = \frac{V_E}{R_E} = \frac{V_B - 0.7\text{ V}}{1.0\text{ k}\Omega} = 1.57\text{ mA}$$

$$V_C = V_{CC} - I_C R_C = 25\text{ V} - (1.57\text{ mA})(10\text{ k}\Omega) = \mathbf{9.3\ V}$$

This value is the dc level of the output. The peak value of the output signal is

$$V_p = 1.414(500\text{ mV}) = 707\text{ mV}$$

(c) Figure 16 shows the output waveform with the signal voltage riding on the 9.3 V dc level. Remember, the output waveform is inverted compared to the input.

▶ **FIGURE 16**

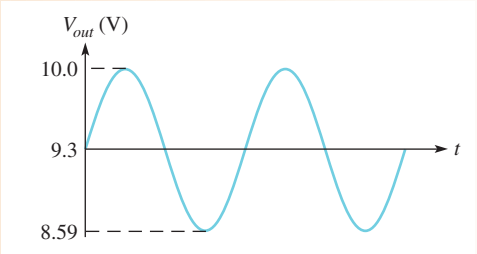

www.EngineeringBooksPdf.com

Related Problem If R_C is changed to 12 kΩ in Figure 15, what is the output waveform?

Open Multisim file E17-03. Measure the output signal voltage and the dc level with the oscilloscope. Compare with the waveform in Figure 16.

Signal Operation on the Load Line You can obtain a graphical picture of an amplifier's operation by showing an example of signal variations on a set of collector curves with a load line, as shown in Figure 17. Let's assume that the dc Q-point values are as follows: $I_B = 40\ \mu A$, $I_C = 4$ mA, and $V_{CE} = 8$ V. The input signal varies the base current from a maximum of 50 μA to a minimum of 30 μA. The resulting variations in collector current and V_{CE} are shown on the graph. The operation is linear as long as the variations do not reach cutoff at the lower end of the load line or saturation at the upper end. An amplifier that operates entirely its linear region is a class A amplifier.

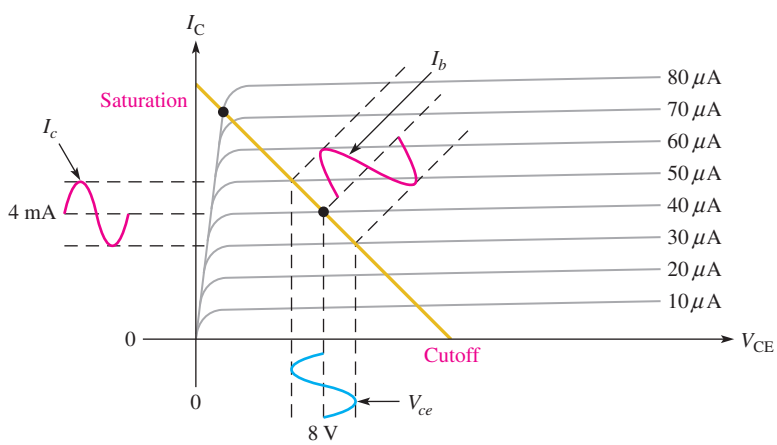

FIGURE 17

Signal operation on the load line.

The Common-Emitter Amplifier

Figure 18 shows a typical **common-emitter (CE)** amplifier. The one shown has voltage-divider bias, although other types of bias methods are possible. C_1 and C_2 are coupling capacitors used to pass the signal into and out of the amplifier such that the source or load will not affect the dc bias voltages. C_3 is a bypass capacitor that shorts the emitter signal voltage (ac) to ground without disturbing the dc emitter voltage. Because of the bypass capacitor, the emitter is at signal (ac) ground (but not dc ground), thus making the circuit a common-emitter amplifier. The bypass capacitor increases the signal voltage gain. (The reason why this increase occurs is discussed next.) Notice that the input signal is applied to the

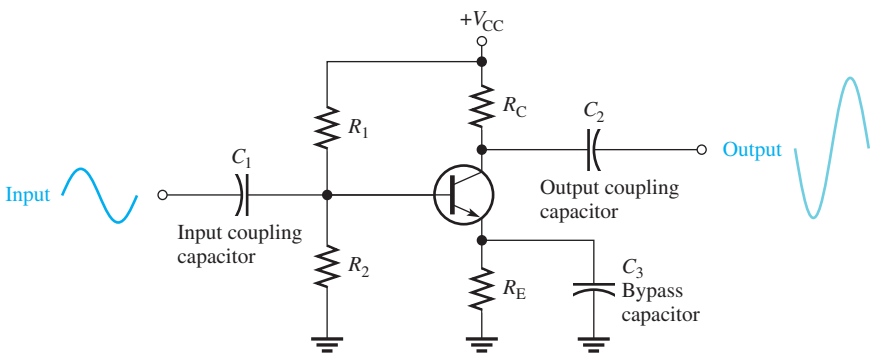

FIGURE 18

Typical common-emitter (CE) amplifier.

www.EngineeringBooksPdf.com

base, and the output signal is taken from the collector. All capacitors are assumed to have a reactance of approximately zero at the signal frequency.

The Bypass Capacitor Increases Voltage Gain The bypass capacitor shorts the signal around the emitter resistor, R_E, in order to increase the voltage gain. To understand why, let's consider the amplifier without the bypass capacitor and see what the voltage is. Imagine the CE amplifier in Figure 18 with the bypass capacitor removed.

As before, lowercase italic subscripts indicate signal (ac) voltages and signal (alternating) currents. The **voltage gain** of the amplifier is V_{out}/V_{in}. The output signal voltage is

$$V_{out} = I_c R_C$$

The signal voltage at the base is approximately equal to

$$V_b \cong V_{in} \cong I_e(r_e + R_E)$$

where r_e is the internal emitter resistance of the transistor (not shown in the schematic). The voltage gain, A_v, can now be expressed as

$$A_v = \frac{V_{out}}{V_{in}} = \frac{I_c R_C}{I_e(r_e + R_E)}$$

Since $I_c \cong I_e$, the currents cancel and the gain is the ratio of the resistances.

Equation 11

$$A_v = \frac{R_C}{r_e + R_E}$$

Keep in mind that this formula is for the amplifier without the bypass capacitor. If R_E is much greater than r_e, then $A_v \cong R_C/R_E$ as given earlier in Equation 10.

If the bypass capacitor is connected across R_E, it effectively shorts the signal to ground, leaving only r_e in the emitter. Thus, the voltage gain of the CE amplifier with the bypass capacitor shorting R_E is

Equation 12

$$A_v = \frac{R_C}{r_e}$$

The transistor parameter r_e is important because it determines the voltage gain of a CE amplifier in conjunction with R_C. A formula for estimating r_e is given without derivation in the following equation:

Equation 13

$$r_e \cong \frac{25\text{ mV}}{I_E}$$

EXAMPLE 4

Determine the voltage gain of the amplifier in Figure 19 both with and without a bypass capacitor in normal and in decibel form.

▶ **FIGURE 19**

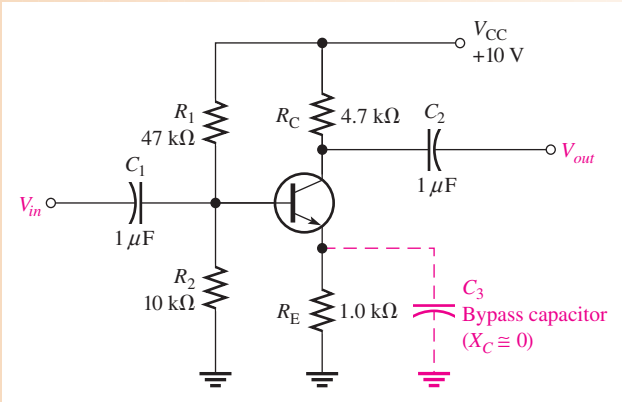

www.EngineeringBooksPdf.com

Solution First, determine r_e. To do so, you need to find I_E. Thus,

$$V_B \cong \left(\frac{R_2}{R_1 + R_2}\right)V_{CC} = \left(\frac{10\text{ k}\Omega}{47\text{ k}\Omega + 10\text{ k}\Omega}\right)10\text{ V} = 1.75\text{ V}$$

$$V_E = V_B - 0.7\text{ V} = 1.05\text{ V}$$

$$I_E = \frac{V_E}{R_E} = \frac{1.05\text{ V}}{1.0\text{ k}\Omega} = 1.05\text{ mA}$$

$$r_e \cong \frac{25\text{ mV}}{I_E} = \frac{25\text{ mV}}{1.05\text{ mA}} = 23.8\ \Omega$$

The voltage gain without a bypass capacitor is

$$A_v = \frac{R_C}{r_e + R_E} = \frac{4.7\text{ k}\Omega}{1023.8\ \Omega} = \mathbf{4.59}$$

In decibel form,

$$A_v = 20\log(4.59) = \mathbf{13.24\text{ dB}}$$

The voltage gain with the bypass capacitor installed is

$$A_v = \frac{R_C}{r_e} = \frac{4.7\text{ k}\Omega}{23.8\ \Omega} = \mathbf{197}$$

As you can see, the voltage gain is greatly increased by the addition of the bypass capacitor. In terms of decibels (dB), the voltage gain is

$$A_v = 20\log(197) = \mathbf{45.9\text{ dB}}$$

Related Problem What is the voltage gain with the bypass capacitor if $R_C = 5.6\text{ k}\Omega$?

Open Multisim file E17-04. Measure the voltage gain of the amplifier without a bypass capacitor. Connect a 10 μF bypass capacitor and measure the gain. Compare both measurements to the calculated values.

Phase Inversion As we discussed before, the output voltage at the collector is 180° out of phase with the input voltage at the base. Therefore, the CE amplifier is characterized by a phase inversion between the input and the output. This inversion is sometimes indicated by a negative voltage gain.

AC Input Resistance The dc input resistance (R_{IN}), viewed from the base of the transistor, was given in Equation 6. The input resistance "seen" by the signal at the base is derived in a similar manner when the emitter resistor is bypassed to ground.

$$R_{in} = \frac{V_b}{I_b}$$

$$V_b = I_e r_e$$

$$I_e \cong \beta_{ac} I_b$$

$$R_{in} \cong \frac{\beta_{ac} I_b r_e}{I_b}$$

The I_b terms cancel, leaving

$$\boldsymbol{R_{in} \cong \beta_{ac} r_e} \qquad \textbf{Equation 14}$$

If the emitter resistor (R_E) is not bypassed, the emitter resistance must be added to r_e first.

www.EngineeringBooksPdf.com

Total Input Resistance of a CE Amplifier Viewed from the base, R_{in} is the ac resistance. The actual resistance "seen" by the source includes that of bias resistors. We will now develop an expression for the total input resistance. The concept of ac ground was mentioned earlier. At this point it needs some additional explanation because it is important in the development of the formula for total input resistance, $R_{in(tot)}$.

You have already seen that the bypass capacitor effectively makes the emitter appear as ground to the ac signal because the reactance of the capacitor is nearly zero at the signal frequency. Of course, to a dc signal the capacitor looks like an open and thus does not affect the dc emitter voltage.

In addition to "seeing" ground through the bypass capacitor, the signal also "sees" ground through the dc supply voltage source, V_{CC}. It does so because there is zero signal voltage at the V_{CC} terminal. Thus, the $+V_{CC}$ terminal effectively acts as ac ground. As a result, the two bias resistors, R_1 and R_2, appear in parallel to the ac input because one end of R_2 goes to actual ground and one end of R_1 goes to ac ground (V_{CC} terminal). Also, R_{in} at the base appears in parallel with $R_1 \| R_2$. This situation is illustrated in Figure 20. The collector resistor, R_C, does not affect the input resistance because the collector-base junction is reverse-biased.

▶ **FIGURE 20**

Total input resistance.

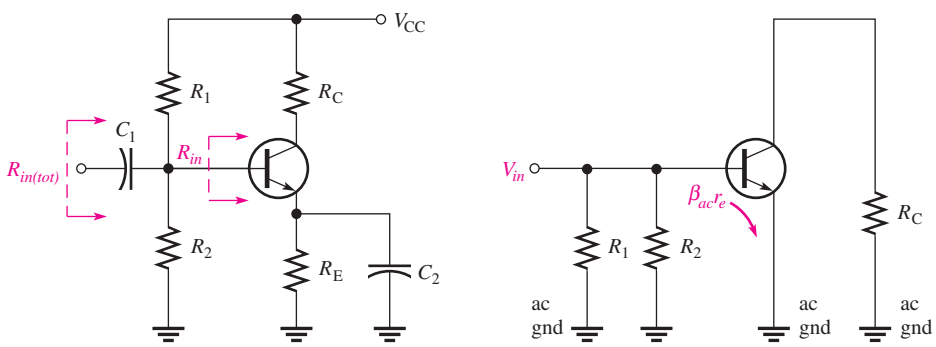

(a) Actual circuit (b) ac equivalent circuit "seen" by ac source (V_{in})

The expression for the total input resistance to the CE amplifier as "seen" by the ac source is

Equation 15

$$R_{in(tot)} = R_1 \| R_2 \| R_{in}$$

R_C has no effect because of the reverse-biased, base-collector junction.

Current Gain The signal **current gain** of a CE amplifier is

Equation 16

$$A_i = \frac{I_c}{I_s}$$

where I_s is the source current and is calculated by $V_{in}/R_{in(tot)}$.

Power Gain The **power gain** of a CE amplifier is the product of the voltage gain and the current gain.

Equation 17

$$A_p = A_v A_i$$

EXAMPLE 5

Determine the voltage gain, current gain, and power gain for the CE amplifier in Figure 21. $\beta_{DC} = \beta_{ac} = 100$. Also, express the voltage and power gains in decibels.

www.EngineeringBooksPdf.com

▶ FIGURE 21

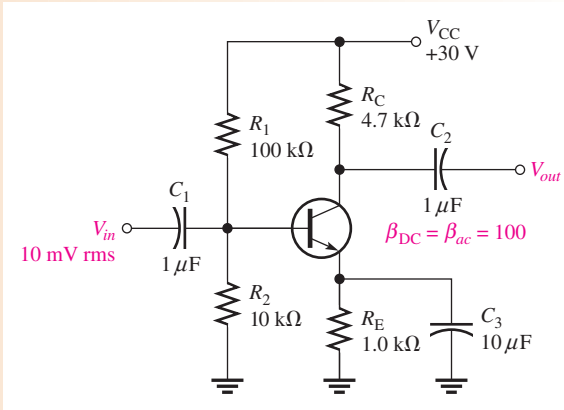

Solution First find r_e. To do so, you must find I_E. Begin by calculating V_B.

$$V_B \cong \left(\frac{R_2}{R_1 + R_2}\right)V_{CC} = \left(\frac{10\text{ k}\Omega}{110\text{ k}\Omega}\right)30\text{ V} = 2.73\text{ V}$$

$$I_E = \frac{V_E}{R_E} = \frac{V_B - 0.7\text{ V}}{R_E} = \frac{2.03\text{ V}}{1.0\text{ k}\Omega} = 2.03\text{ mA}$$

$$r_e \cong \frac{25\text{ mV}}{I_E} = \frac{25\text{ mV}}{2.03\text{ mA}} = 12.3\ \Omega$$

The ac voltage gain is

$$A_v \cong \frac{R_C}{r_e} = \frac{4.7\text{ k}\Omega}{12.3\ \Omega} = \mathbf{382}$$

Determine the signal current gain by first finding $R_{in(tot)}$ to get I_s.

$$R_{in(tot)} = R_1 \parallel R_2 \parallel \beta_{ac}r_e = 100\text{ k}\Omega \parallel 10\text{ k}\Omega \parallel 1.23\text{ k}\Omega = 1.08\text{ k}\Omega$$

$$I_s = \frac{V_{in}}{R_{in(tot)}} = \frac{10\text{ mV}}{1.08\text{ k}\Omega} = 9.26\ \mu\text{A}$$

Next determine I_c.

$$I_c = \frac{V_{out}}{R_C} = \frac{A_vV_{in}}{R_C} = \frac{(382)(10\text{ mV})}{4.7\text{ k}\Omega} = \mathbf{813\ \mu A}$$

$$A_i = \frac{I_c}{I_s} = \frac{813\ \mu\text{A}}{9.26\ \mu\text{A}} = \mathbf{87.8}$$

The power gain is

$$A_p = A_vA_i = (382)(87.8) = \mathbf{33{,}540}$$

The voltage gain and the power gain in decibels are as follows:

$$A_v = 20\log(382) = \mathbf{51.6\text{ dB}}$$

$$A_p = 10\log(33{,}540) = \mathbf{45.3\text{ dB}}$$

Related Problem Determine A_v in this example if C_3 is removed.

Open Multisim file E17-05. Measure the voltage gain and compare with the calculated value.

www.EngineeringBooksPdf.com

The Common-Collector Amplifier

The common-collector (CC) amplifier, commonly referred to as an emitter-follower, is another type of BJT amplifier configuration. The input is applied to the base and the output is at the emitter. There is no collector resistor. The voltage gain of a CC amplifier is approximately 1, but the current gain is always greater than 1.

Figure 22 shows a **common-collector (CC)** circuit with a voltage-divider bias. Notice that the input is applied to the base and the output is taken from the emitter.

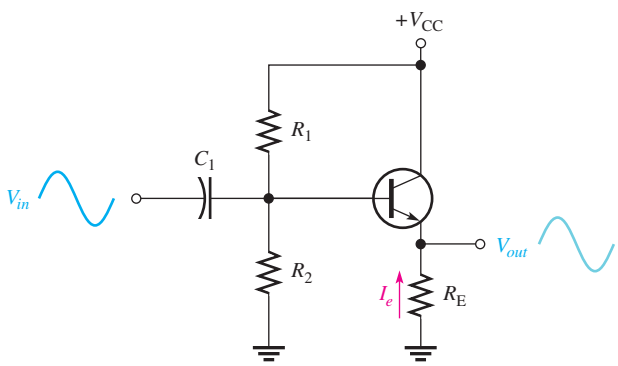

▶ **FIGURE 22**

Typical emitter-follower (common-collector, CC) amplifier.

Voltage Gain As in all amplifiers, the voltage gain in a CC amplifier is $A_v = V_{out}/V_{in}$. For the emitter-follower, V_{out} is I_eR_E, and V_{in} is $I_e(r_e + R_E)$. Therefore, the gain is $I_eR_E/I_e(r_e + R_E)$. The currents cancel, and the gain expression simplifies to

Equation 18

$$A_v = \frac{R_E}{r_e + R_E}$$

It is important to notice here that *the gain is always less than 1*. Because r_e is normally much less than R_E, then a good approximation is $A_v = 1$.

Since the output voltage is the emitter voltage, it is in phase with the base or the input voltage. As a result, and because the voltage gain is close to 1, the output voltage follows the input voltage—thus the common-collector amplifier is also known as the **emitter-follower**.

Input Resistance The emitter-follower is characterized by a high input resistance, which makes it a very useful circuit. Because of the high input resistance, the emitter-follower can be used as a buffer to minimize loading effects when one circuit is driving another.

The derivation of the input resistance viewed from the base is similar to that for the CE amplifier. In this case, however, the emitter resistor is not bypassed.

$$R_{in} = \frac{V_b}{I_b} = \frac{I_e(r_e + R_E)}{I_b} \cong \frac{\beta_{ac}I_b(r_e + R_E)}{I_b} = \beta_{ac}(r_e + R_E)$$

If R_E is at least ten times larger than r_e, then the input resistance at the base is

Equation 19

$$R_{in} \cong \beta_{ac}R_E$$

In Figure 22, the bias resistors appear to the input signal to be in parallel with R_{in}, just as in the voltage-divider biased CE amplifier. The total ac input resistance is

Equation 20

$$R_{in(tot)} = R_1 \parallel R_2 \parallel R_{in}$$

Current Gain The signal current gain for the emitter-follower is I_e/I_s where I_s is the signal current and can be calculated as $V_s/R_{in(tot)}$. If the bias resistors are large enough to be

www.EngineeringBooksPdf.com

neglected so that $I_s = I_b$, then the current gain of the amplifier is equal to the current gain of the transistor, β_{ac}. Of course, the same was also true for the CE amplifier. β_{ac} is the maximum achievable current gain in both types of amplifiers.

$$A_i = \frac{I_e}{I_s}$$ **Equation 21**

Since $I_e = V_{out}/R_E$ and $I_s = V_{in}/R_{in(tot)}$, A_i can also be expressed as $R_{in(tot)}/R_E$, as will be shown in Example 6.

Power Gain The power gain is the product of the voltage gain and the current gain. For the emitter-follower, the power gain is approximately equal to the current gain because the voltage gain is approximately 1.

$$A_p \cong A_i$$ **Equation 22**

EXAMPLE 6

Determine the input resistance of the emitter-follower in Figure 23. Also find the voltage gain, current gain, and power gain.

▶ **FIGURE 23**

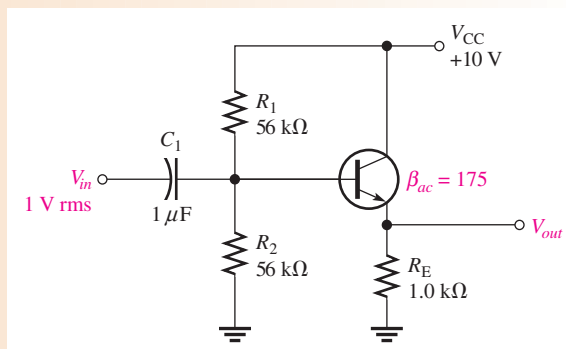

Solution The approximate input resistance viewed from the base is

$$R_{in} \cong \beta_{ac}R_E = (175)(1.0\,\text{k}\Omega) = 175\,\text{k}\Omega$$

The total input resistance is

$$R_{in(tot)} = R_1 \parallel R_2 \parallel R_{in} = 56\,\text{k}\Omega \parallel 56\,\text{k}\Omega \parallel 175\,\text{k}\Omega = \mathbf{24.1\,k\Omega}$$

The voltage gain is, neglecting r_e,

$$A_v \cong \mathbf{1}$$

The current gain is

$$A_i = \frac{I_e}{I_s}$$

$$I_e = \frac{V_{out}}{R_E}$$

$$I_s = \frac{V_{in}}{R_{in(tot)}}$$

$$A_i = \frac{V_{out}/R_E}{V_{in}/R_{in(tot)}}$$

www.EngineeringBooksPdf.com

Since $V_{in} \cong V_{out}$,

$$A_i = \frac{R_{in(tot)}}{R_E} = \frac{24.1\ \text{k}\Omega}{1.0\ \text{k}\Omega} = \mathbf{24.1}$$

The power gain is

$$A_p \cong A_i = \mathbf{24.1}$$

Related Problem If R_E in Figure 23 is decreased to 820 Ω, what is the power gain?

Open Multisim file E17-06. Verify that the voltage gain is close to 1.

In addition to the common-emitter (CE) and the common-collector amplifier (CC) configurations, there is a third configuration called the **common-base (CB)**. In the CB configuration, the base is the common (grounded) terminal, the input signal is applied to the emitter, and the output signal is taken off the collector. The CB exhibits voltage gains greater than 1, similar to the CE configuration, but the current gain is always less than 1. The CB configuration is not widely used in amplifier applications.

SECTION 2 CHECKUP

1. What does the term *amplification* mean?
2. What is the Q-point?
3. A common-emitter circuit has $R_C = 47\ \text{k}\Omega$ and $R_E = 2.2\ \text{k}\Omega$. What is the approximate voltage gain?
4. What is the purpose of the bypass capacitor in a CE amplifier?
5. How is the voltage gain of a CE amplifier determined?
6. If A_v is 50 and A_i is 94, what is the power gain of a CE amplifier?
7. What is another name for a common-collector amplifier?
8. What is the ideal maximum voltage gain of a CC amplifier?

3 BJT CLASS B AMPLIFIERS

When an amplifier is biased such that it operates in the linear region for 180° of the input cycle and is in cutoff for 180°, it is a **class B amplifier**. The primary advantage of a class B amplifier over a class A is that the class B is more efficient; you can get more output power for a given amount of input power. A disadvantage of class B amplifiers is that it is more difficult to implement the circuit in order to get a linear reproduction of the input waveform. As you will see in this section, the term **push-pull** refers to a common type of class B amplifier circuit in which the input wave shape is approximately reproduced at the output.

After completing this section, you should be able to

- **Analyze class B amplifiers**
  - Explain class B operation
  - Discuss the meaning of push-pull amplifier operation

www.EngineeringBooksPdf.com

- Define crossover distortion
- Describe how a class B push-pull amplifier is biased
- Determine the maximum output power
- Determine the efficiency of a class B amplifier

Class B amplifier operation is illustrated in Figure 24 for the case of a common-collector amplifier. The class B amplifier is biased at cutoff so that $I_{CQ} = 0$ and $V_{CEQ} = V_{CE(cutoff)}$. It is brought out of cutoff and operates in its linear region when the input signal drives it into conduction. This is illustrated in Figure 24 with an emitter-follower circuit.

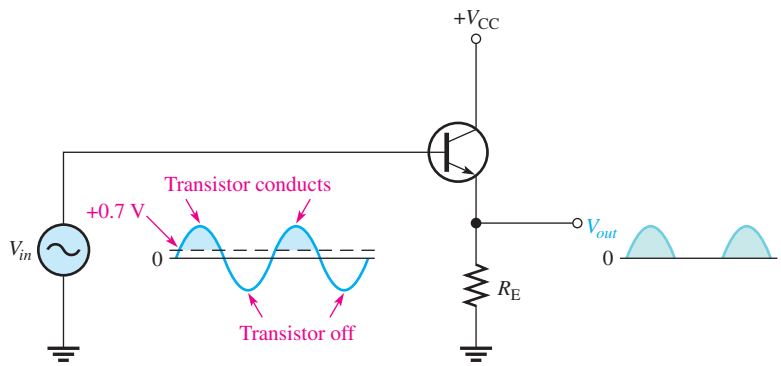

◀ FIGURE 24

Common-collector class B amplifier.

Push-Pull Operation

Figure 25 shows a push-pull class B amplifier using two emitter-followers. This is a complementary amplifier because one emitter-follower uses an *npn* transistor and the other uses a *pnp,* which conducts on opposite alternations of the input cycle. Notice that there is no dc base bias voltage ($V_B = 0$). Thus, only the signal voltage drives the transistors into conduction. Q_1 conducts during the positive half of the input cycle, and Q_2 conducts during the negative half.

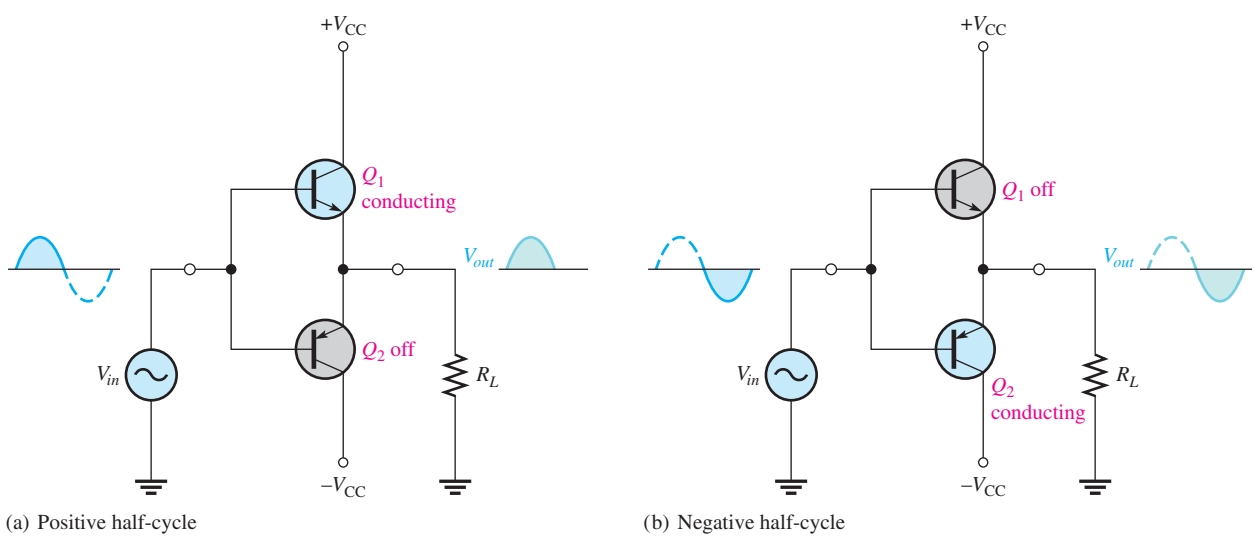

▲ FIGURE 25

Class B push-pull operation.

www.EngineeringBooksPdf.com

Crossover Distortion

When the dc base voltage is zero, the input signal voltage must exceed V_{BE} before a transistor conducts. As a result, there is a time interval between the positive and negative alternations of the input when neither transistor is conducting, as shown in Figure 26. The resulting distortion in the output waveform is called *crossover distortion.*

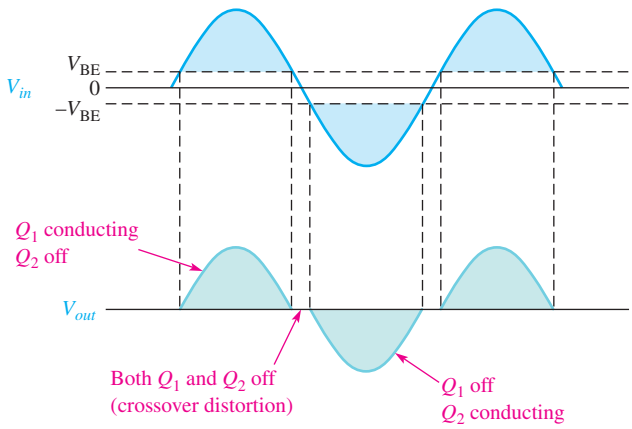

▶ **FIGURE 26**

Illustration of crossover distortion in a class B push-pull amplifier.

Biasing the Push-Pull Amplifier

To eliminate crossover distortion, both transistors in the push-pull arrangement must be biased slightly above cutoff when there is no signal. This can be done with a voltage-divider and diode arrangement, as shown in Figure 27. When the diode characteristics of D_1 and D_2 are closely matched to the characteristics of the transistor base-emitter junctions, a stable bias is maintained.

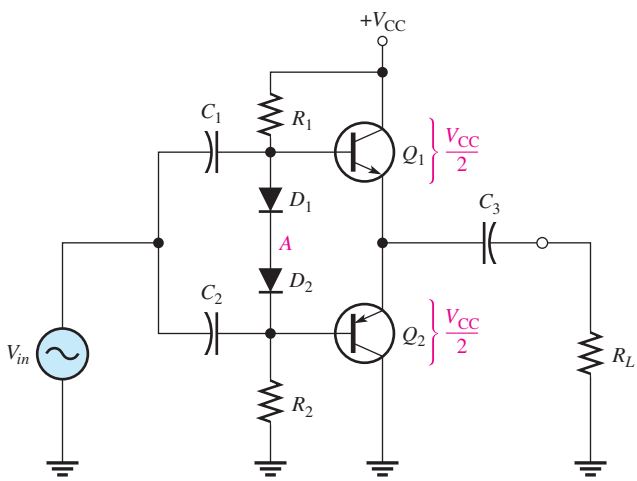

▶ **FIGURE 27**

Biasing the push-pull amplifier to eliminate crossover distortion.

Since R_1 and R_2 are of equal value, the voltage with respect to ground at node A between the two diodes is $V_{CC}/2$. Assuming that both diodes and both transistors are identical, the drop across D_1 equals the V_{BE} of Q_1, and the drop across D_2 equals the V_{BE} of Q_2. As a result, the voltage at the emitters is also $V_{CC}/2$, and therefore, $V_{CEQ1} = V_{CEQ2} = V_{CC}/2$, as indicated. Because both transistors are biased near cutoff, $I_{CQ} \cong 0$.

www.EngineeringBooksPdf.com

AC Operation

Under maximum conditions, transistors Q_1 and Q_2 are alternately driven from near cutoff to near saturation. During the positive alternation of the input signal, the Q_1 emitter is driven from its Q-point value of $V_{CC}/2$ to V_{CC}, producing a positive peak voltage ideally equal to V_{CEQ}. In practice, the peak voltage will be a little less than V_{CEQ}. At the same time, the Q_1 current swings from its Q-point value near zero to near-saturation value, as shown in Figure 28(a).

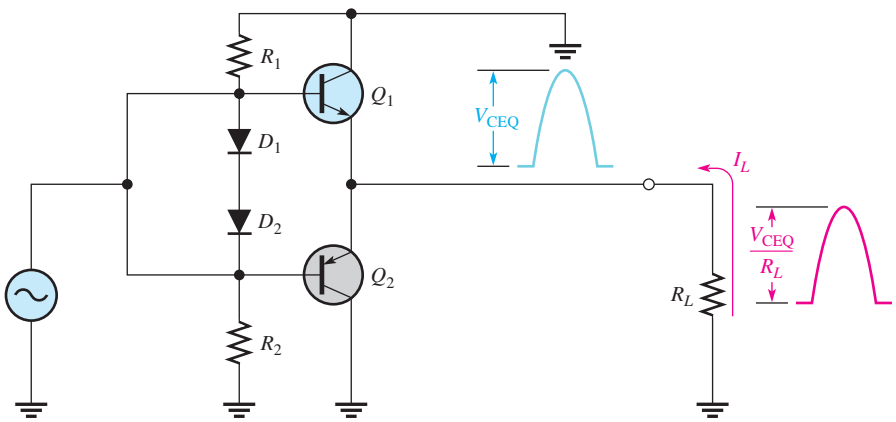

(a) Q_1 conducting with maximum signal output

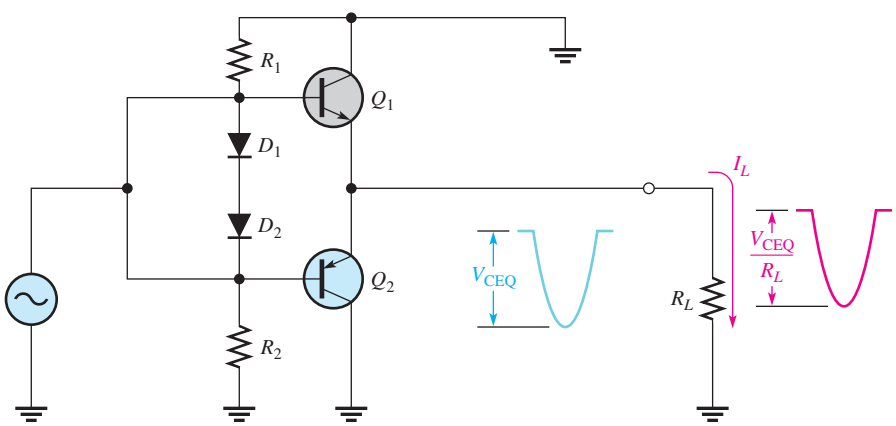

(b) Q_2 conducting with maximum signal output

▲ **FIGURE 28**

AC push-pull operation. Capacitors are assumed to be shorts at the signal frequency, and the dc source is at ac ground.

During the negative alternation of the input signal, the Q_2 emitter is driven from its Q-point value of $V_{CC}/2$ to near zero, producing a negative peak voltage ideally equal to V_{CEQ}. Also, the Q_2 current swings from near zero to near-saturation value, as shown in Figure 28(b).

Because the peak voltage across each transistor is V_{CEQ}, the ac saturation current is

$$I_{c(sat)} = \frac{V_{CEQ}}{R_L}$$ **Equation 23**

Since $I_e \cong I_c$ and the output current is the emitter current, the peak output current is also V_{CEQ}/R_L.

www.EngineeringBooksPdf.com

EXAMPLE 7

Determine the ideal maximum peak values for the output voltage and current in Figure 29.

▶ FIGURE 29

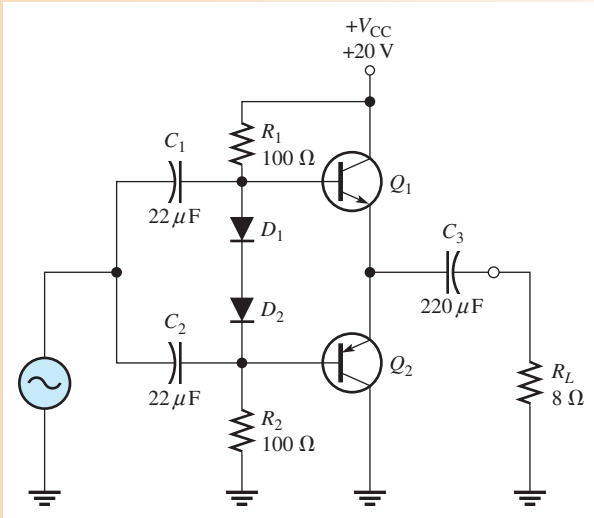

Solution The ideal maximum peak output voltage is

$$V_{p(out)} = V_{CEQ} = \frac{V_{CC}}{2} = \frac{20\text{ V}}{2} = \mathbf{10\ V}$$

The ideal maximum peak output current is

$$I_{p(out)} = I_{c(sat)} = \frac{V_{CEQ}}{R_L} = \frac{10\text{ V}}{8\ \Omega} = \mathbf{1.25\ A}$$

Related Problem Find the ideal maximum peak values for the output voltage and current in Figure 29 if V_{CC} is lowered to 15 V and the load resistor is changed to 16 Ω.

Open Multisim file E17-07. Observe the maximum output. Change R_L to 16 Ω and compare the results.

Maximum Output Power

It has been shown that the maximum peak output current is approximately $I_{c(sat)}$, and the maximum peak output voltage is approximately V_{CEQ}. The maximum average output power therefore is

$$P_{out} = V_{rms(out)} I_{rms(out)}$$

Since

$$V_{rms(out)} = 0.707 V_{p(out)} = 0.707 V_{CEQ}$$

and

$$I_{rms(out)} = 0.707 I_{p(out)} = 0.707 I_{c(sat)}$$

then

$$P_{out} = 0.5 V_{CEQ} I_{c(sat)}$$

Substituting $V_{CC}/2$ for V_{CEQ},

Equation 24

$$\boldsymbol{P_{out(max)} = 0.25 V_{CC} I_{c(sat)}}$$

www.EngineeringBooksPdf.com

Input Power

The input power comes from the V_{CC} supply and is

$$P_{DC} = V_{CC}I_{CC}$$

Since each transistor draws current for a half-cycle, the current is a half-wave signal with an average value of

$$I_{CC} = \frac{I_{c(sat)}}{\pi}$$

Thus,

$$\mathbf{P_{DC} = \frac{V_{CC}I_{c(sat)}}{\pi}}$$ **Equation 25**

Efficiency

The main advantage of push-pull class B amplifiers over class A is that a class B amplifier has a much higher efficiency and can be used in higher power applications. This advantage overrides the difficulty of biasing the class B push-pull amplifier to eliminate crossover distortion.

The efficiency of an amplifier is defined as the ratio of ac output power to dc input power.

$$\text{eff} = \frac{P_{out}}{P_{DC}}$$

The ideal maximum efficiency for a class B amplifier is designated eff_{max} and can be shown to be

$$\mathbf{eff_{max} = 0.785}$$ **Equation 26**

Therefore, ideally the maximum efficiency is 78.5%. The maximum ideal efficiency for class A is 0.25 (25%). Actual maximum efficiencies are always lower.

EXAMPLE 8

Find the ideal maximum ac output power and the dc input power of the amplifier in Figure 29 of Example 7. Ignore the power dissipated by the bias resistors.

Solution

In Example 7, $I_{c(sat)}$ was found to be 1.25 A. Thus,

$$P_{out(max)} = 0.25V_{CC}I_{c(sat)} = 0.25(20\text{ V})(1.25\text{ A}) = \mathbf{6.25\ W}$$

$$P_{DC} = \frac{V_{CC}I_{c(sat)}}{\pi} = \frac{(20\text{ V})(1.25\text{ A})}{\pi} = \mathbf{7.96\ W}$$

Related Problem

What is the ideal maximum ac output power in Figure 29 if $R_L = 4\ \Omega$?

SECTION 3 CHECKUP

1. Where is the Q-point for a class B amplifier?
2. What causes crossover distortion?
3. What is the maximum ideal efficiency of a push-pull class B amplifier?
4. What is the advantage of the push-pull configuration over a class A amplifier?

www.EngineeringBooksPdf.com

4 THE BJT AS A SWITCH

In previous sections, we discussed the transistor as a linear amplifier. The second major application area is switching applications. When used as an electronic switch, a transistor normally is operated alternately in cutoff and saturation.

After completing this section, you should be able to

- **Analyze a transistor switching circuit**
  - Describe the conditions in cutoff
  - Describe the conditions in saturation
  - Calculate the collector-emitter cutoff voltage
  - Calculate the collector saturation current
  - Calculate the minimum base current to produce saturation

Figure 30 illustrates the basic operation of a transistor as a switching device. In part (a), the transistor is in the cutoff region because the base-emitter junction is not forward-biased. In this condition, there is, ideally, an open between collector and emitter, as indicated by the switch equivalent. In part (b), the transistor is in the saturation region because the base-emitter junction and the base-collector junction are forward-biased, and the base current is made large enough to cause the collector current to reach its saturated value. In this condition there is, ideally, a short between collector and emitter, as indicated by the switch equivalent. Actually, a voltage drop of up to a few tenths of a volt normally occurs, which is the saturation voltage, $V_{CE(sat)}$.

▶ **FIGURE 30**

Ideal switching action of a transistor.

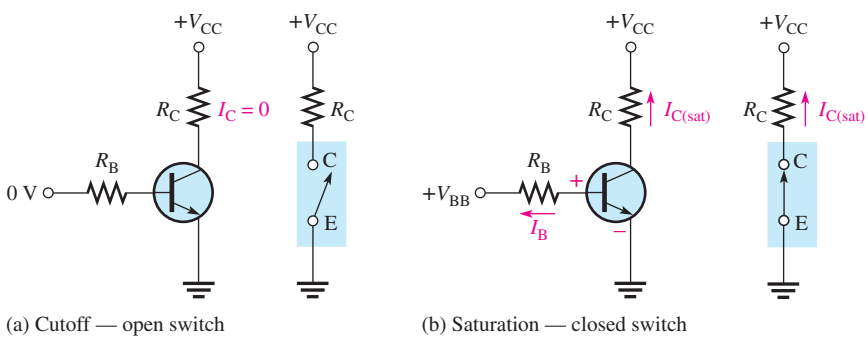

(a) Cutoff — open switch (b) Saturation — closed switch

Conditions in Cutoff As mentioned before, a transistor is in cutoff when the base-emitter junction is *not* forward-biased. Neglecting leakage current, all of the currents are approximately zero, and V_{CE} is approximately equal to V_{CC}.

Equation 27

$$V_{CE(cutoff)} \cong V_{CC}$$

Conditions in Saturation When the base-emitter junction is forward-biased and there is enough base current to produce a maximum collector current, the transistor is saturated. Since $V_{CE(sat)}$ is very small compared to V_{CC}, it can usually be neglected, so the collector current is

Equation 28

$$I_{C(sat)} \cong \frac{V_{CC}}{R_C}$$

www.EngineeringBooksPdf.com

The minimum value of base current needed to produce saturation is

$$I_{B(min)} = \frac{I_{C(sat)}}{\beta_{DC}}$$ **Equation 29**

EXAMPLE 9

(a) For the transistor switching circuit in Figure 31, what is V_{CE} when $V_{IN} = 0$ V?

(b) What minimum value of I_B will saturate this transistor if the β_{DC} is 200?

(c) Calculate the maximum value of R_B when $V_{IN} = 5$ V.

▶ **FIGURE 31**

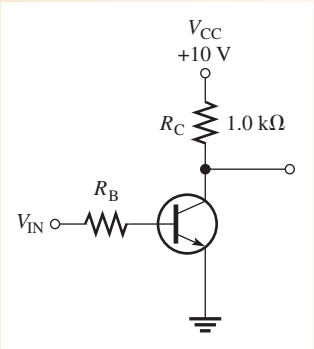

Solution

(a) When $V_{IN} = 0$ V, the transistor is in cutoff and $V_{CE} = V_{CC} = \mathbf{10\ V}$.

(b) When the transistor is saturated, $V_{CE} \cong 0$ V, so

$$I_{C(sat)} \cong \frac{V_{CC}}{R_C} = \frac{10\text{ V}}{1.0\text{ k}\Omega} = 10\text{ mA}$$

$$I_{B(min)} = \frac{I_{C(sat)}}{\beta_{DC}} = \frac{10\text{ mA}}{200} = \mathbf{50\ \mu A}$$

This is the value of I_B necessary to drive the transistor to the point of saturation. Any further increase in I_B will drive the transistor deeper into saturation but will not increase I_C.

(c) When the transistor is saturated, $V_{BE} = 0.7$ V. The voltage across R_B is

$$V_{R_B} = V_{IN} - 0.7\text{ V} = 4.3\text{ V}$$

The maximum value of R_B that will allow a minimum I_B of 50 μA is calculated by Ohm's law. The actual value used should be much less.

$$R_{B(max)} = \frac{V_{R_B}}{I_B} = \frac{4.3\text{ V}}{50\ \mu\text{A}} = \mathbf{86\ k\Omega}$$

Related Problem Determine the minimum value of I_B that will saturate the transistor in Figure 31 if β_{DC} is 125 and $V_{CE(sat)}$ is 0.2 V.

SECTION 4 CHECKUP

1. When a transistor is used as a switching device, in what two states is it operated?
2. When does the collector current reach its maximum value?
3. When is the collector current approximately zero?
4. Name the two conditions that produce saturation.
5. When is V_{CE} equal to V_{CC}?

www.EngineeringBooksPdf.com

5 DC OPERATION OF FIELD-EFFECT TRANSISTORS (FETs)

Recall that a bipolar junction transistor (BJT) is a current-controlled device; that is, the base current controls the amount of collector current. A **field-effect transistor (FET)** is different; it is a voltage-controlled device in which the voltage at the gate terminal controls the amount of current through the device. Also, compared to the BJT, the FET has a very high input resistance, which makes it superior in certain applications. The two major types of FETs are the junction field-effect transistor (JFET) and the metal-oxide semiconductor field-effect transistor (MOSFET).

After completing this section, you should be able to

- **Describe the basic structure and operation of JFETs and MOSFETs**
  - Identify the standard FET symbols
  - Explain the difference between JFETs and MOSFETs
  - Label the terminals of a FET
  - Analyze common biasing arrangements for FETs, including self-bias, zero bias, and voltage-divider bias

The Junction Field-Effect Transistor (JFET)

The **JFET** (junction field-effect transistor) is a type of FET that operates with a reverse-biased junction to control current in the channel. Depending on their structure, JFETs fall into either of two categories: *n* channel or *p* channel. Figure 32(a) shows the basic structure of an *n* channel JFET. Wire leads are connected to each end of the *n* channel; the **drain** is at the upper end and the **source** is at the lower end. Two *p*-type regions are diffused in the *n*-type material to form a channel, and both *p*-type regions are connected to the **gate** lead. For simplicity, the gate lead is shown connected to only one of the *p* regions. A *p*-channel JFET is shown in Figure 32(b).

▶ **FIGURE 32**

Basic structure of the two types of JFET.

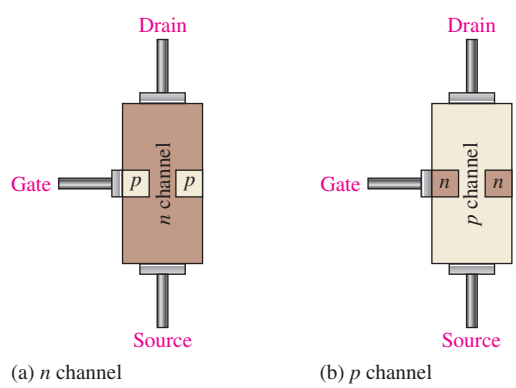

Basic Operation To illustrate the operation of a JFET, Figure 33(a) shows bias voltages applied to an *n*-channel device. V_{DD} provides a drain-to-source voltage and supplies current from drain to source. V_{GG} sets the reverse-biased voltage between the gate and the source. The white areas surrounding the *p* material of the gate represent the depletion region created by the reverse bias. This depletion region is wider toward the drain end of the channel because the reverse-biased voltage between the gate and the drain is greater than that between the gate and the source.

www.EngineeringBooksPdf.com

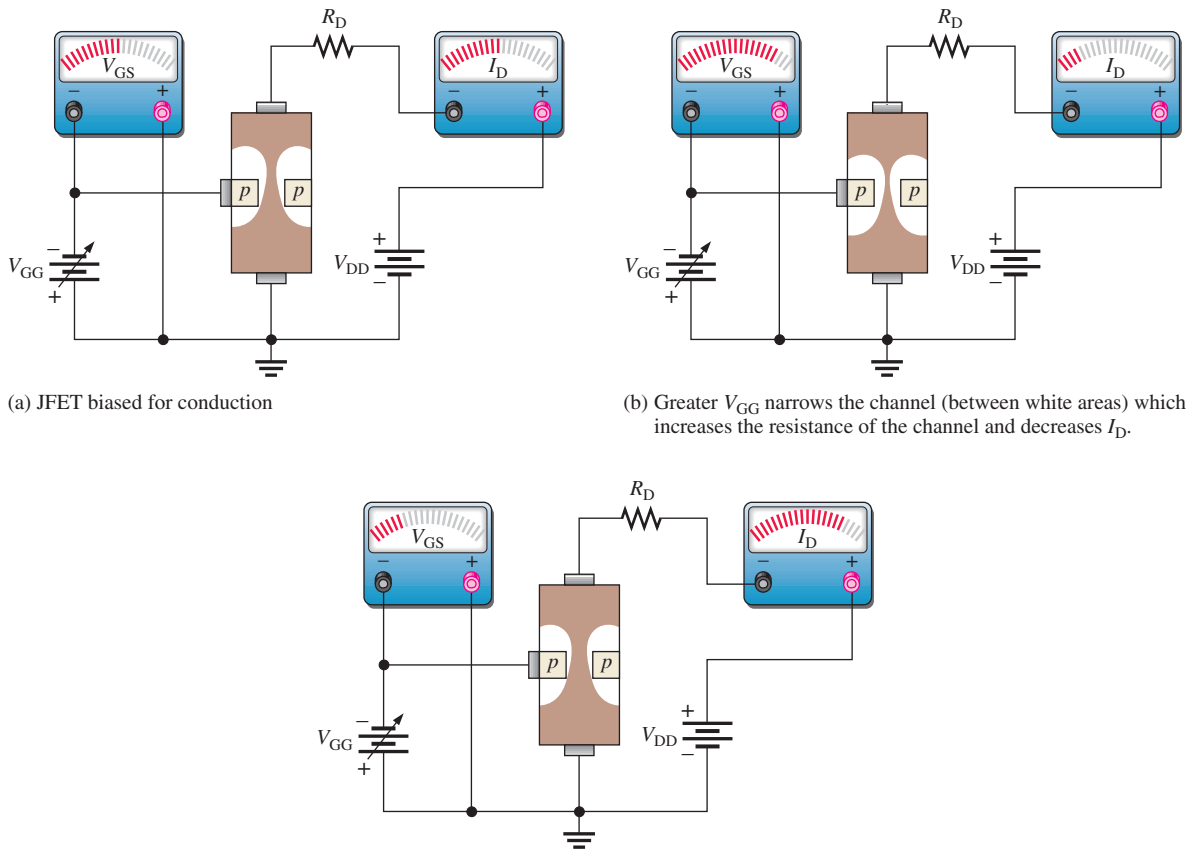

(a) JFET biased for conduction

(b) Greater V_{GG} narrows the channel (between white areas) which increases the resistance of the channel and decreases I_D.

(c) Less V_{GG} widens the channel which decreases the resistance of the channel and increases I_D.

▲ **FIGURE 33**

Effects of V_{GG} on channel width and drain current ($V_{GG} = V_{GS}$).

The JFET is always operated with the gate-to-source pn junction reverse-biased. Reverse-biasing of the gate-source junction with a negative gate voltage produces a depletion region in the *n* channel and thus increases the channel resistance. The channel width, and thus its resistance, is controlled by varying the gate voltage, and thereby the amount of drain current, I_D, can also be controlled. This concept is illustrated in Figure 33(b) and (c).

JFET Symbols The schematic symbols for both *n*-channel and *p*-channel JFETs are shown in Figure 34. Notice that the arrow on the gate points "in" for *n* channel and "out" for *p* channel.

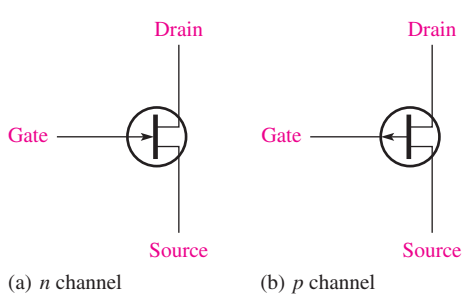

(a) *n* channel (b) *p* channel

◀ **FIGURE 34**

JFET schematic symbols.

www.EngineeringBooksPdf.com

The Metal-Oxide Semiconductor FET (MOSFET)

The **MOSFET** (metal-oxide semiconductor field-effect transistor) is the second category of field-effect transistor. A MOSFET differs from a JFET in that a MOSFET has no *pn* junction structure; instead, the gate of the MOSFET is insulated from the channel by a silicon dioxide (SiO_2) layer. The two basic types of MOSFETs are depletion (D) and enhancement (E).

Depletion MOSFET (D-MOSFET) One type of MOSFET is the depletion MOSFET (D-MOSFET), and Figure 35 illustrates its basic structure. The drain and source are diffused into the substrate material and then connected by a narrow channel adjacent to the insulated gate. Both *n*-channel and *p*-channel devices are shown in the figure. We will use the *n*-channel device to describe the basic operation. The *p*-channel operation is the same, except the voltage polarities are opposite those of the *n*-channel device.

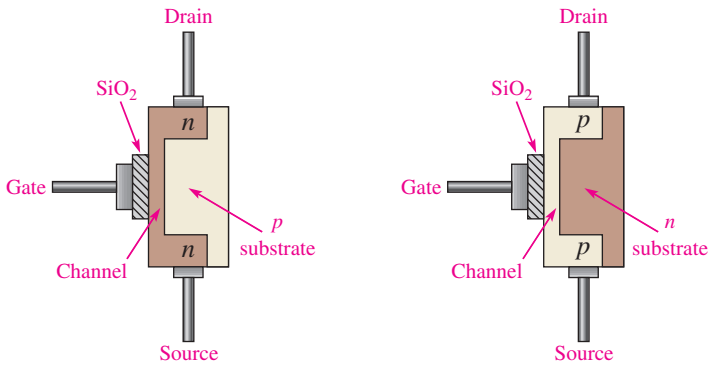

(a) *n* channel (b) *p* channel

▶ **FIGURE 35**

Representation of the basic structure of D-MOSFETs.

The D-MOSFET can be operated in either of two modes—the **depletion mode** or the **enhancement mode**—and is sometimes called a *depletion/enhancement MOSFET.* Since the gate is insulated from the channel, either a positive or a negative gate voltage can be applied. The *n*-channel MOSFET operates in the depletion mode when a negative gate-to-source voltage is applied and in the enhancement mode when a positive gate-to-source voltage is applied.

The depletion mode is illustrated in Figure 36(a). Visualize the gate as one plate of a parallel plate capacitor and the channel as the other plate. The silicon dioxide insulating

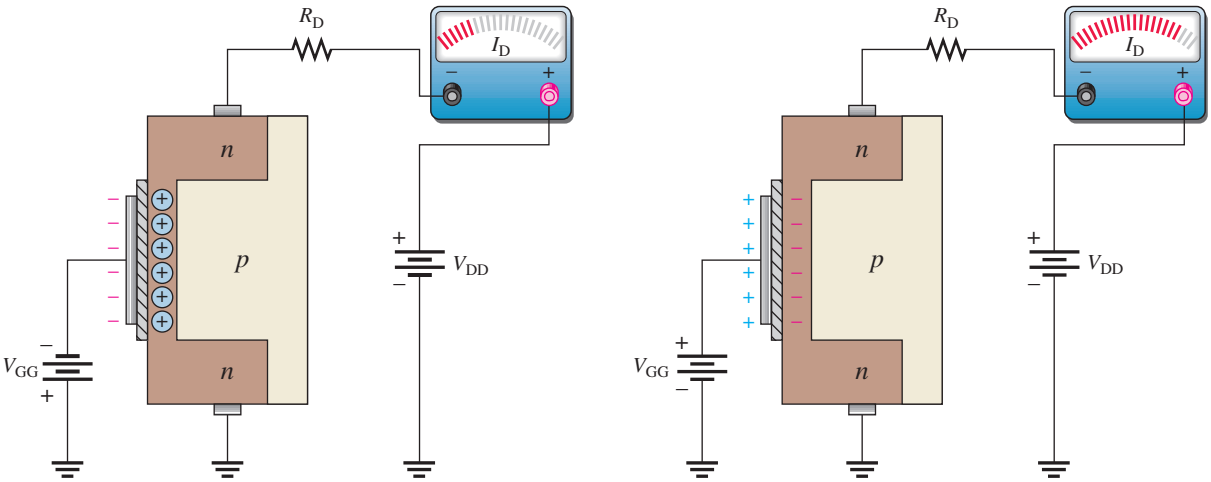

(a) Depletion mode: V_{GS} negative and less than $V_{GS(off)}$ (b) Enhancement mode: V_{GS} positive

▲ **FIGURE 36**

Operation of *n*-channel D-MOSFET.

www.EngineeringBooksPdf.com

layer is the dielectric. With a negative gate voltage, the negative charges on the gate repel conduction electrons from the channel, leaving positive ions in their place. The *n*-channel is depleted of some of its electrons, so the channel conductivity is decreased. The greater the negative voltage on the gate, the greater the depletion of *n*-channel electrons. At a sufficiently negative gate-to-source voltage, $\boldsymbol{V_{GS(off)}}$, the channel is totally depleted and the drain current is zero. $V_{GS(off)}$ is called the gate-source cutoff voltage.

Like the *n*-channel JFET, the *n*-channel D-MOSFET conducts drain current for gate-to-source voltages between $V_{GS(off)}$ and 0 V. In addition, the D-MOSFET conducts for values of V_{GS} above 0 V.

The enhancement mode is illustrated in Figure 36(b). With a positive gate voltage, more conduction electrons are attracted into the channel, thus increasing (enhancing) the channel conductivity.

The schematic symbols for both the *n*-channel and the *p*-channel depletion/enhancement MOSFETs are shown in Figure 37. The substrate, indicated by the arrow, is normally (but not always) connected internally to the source. An inward substrate arrow is for *n*-channel, and an outward arrow is for *p*-channel.

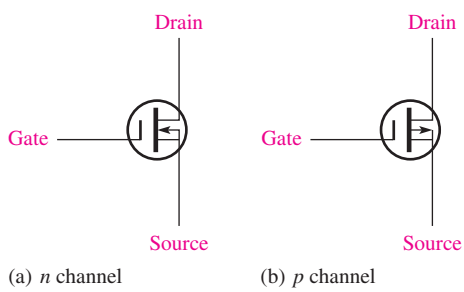

(a) *n* channel (b) *p* channel

FIGURE 37

D-MOSFET schematic symbols.

Enhancement MOSFET (E-MOSFET) This type of MOSFET operates *only* in the enhancement mode and has no depletion mode. It differs in construction from the D-MOSFET in that it has no structural channel. Notice in Figure 38(a) that the substrate extends completely to the SiO_2 layer.

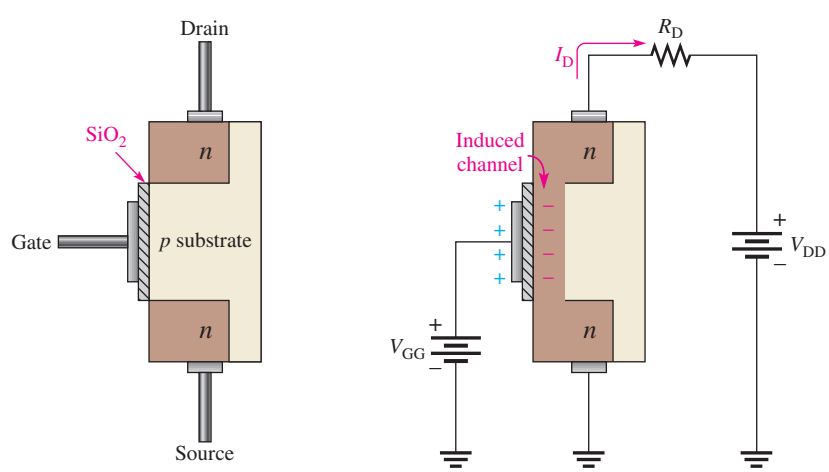

(a) Basic construction (b) Induced channel ($V_{GS} > V_{GS(th)}$)

FIGURE 38

E-MOSFET construction and operation.

For an *n*-channel device, a positive gate voltage above a threshold value, $V_{GS(th)}$, induces a channel by creating a thin layer of negative charges in the substrate region adjacent to the SiO_2 layer, as shown in Figure 38(b). The conductivity of the channel is enhanced by increasing the gate-to-source voltage, thus pulling more electrons into the channel. For any gate voltage below the threshold value, there is no channel.

www.EngineeringBooksPdf.com

The schematic symbols for the *n*-channel and *p*-channel E-MOSFETs are shown in Figure 39. The broken lines symbolize the absence of a structural channel.

▶ **FIGURE 39**

E-MOSFET schematic symbols.

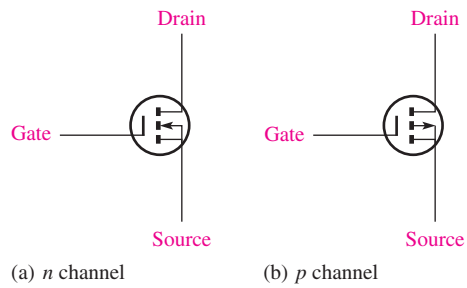

Handling Precautions Because the gate of a MOSFET is insulated from the channel, the input resistance is extremely high (ideally infinite). The gate leakage current, I_{GSS}, for a typical MOSFET is in the pA range, whereas the gate reverse current for a typical JFET is in the nA range.

The input capacitance, of course, results from the insulated gate structure. Excess static charge can accumulate because the input capacitance combines with the very high input resistance and can result in damage to the device as a result of electrostatic discharge (ESD). To avoid ESD and possible damage, the following precautions should be taken:

1. MOS devices should be shipped and stored in conductive foam.
2. All instruments and metal benches used in assembly or test should be connected to earth ground (round prong of wall outlets).
3. The assembler's or handler's wrist should be connected to earth ground with a length of wire and a high-value series resistor.
4. Never remove a MOS device (or any other device, for that matter) from the circuit while the power is on.
5. Do not apply signals to a MOS device while the dc power supply is off.

JFET Biasing

Recall that a JFET must be operated such that the gate-source junction is always reverse-biased. This condition requires a negative V_{GS} for an *n*-channel JFET and a positive V_{GS} for a *p*-channel JFET. This can be achieved using the self-bias arrangements shown in Figure 40. Notice that the gate is biased at approximately 0 V by resistor R_G connected to ground. The reverse leakage current, I_{GSS}, does produce a very small voltage across R_G, but this can be neglected in most cases. We will assume that R_G has no voltage drop across it.

▶ **FIGURE 40**

Self-biased JFETs ($I_S = I_D$ in all FETs).

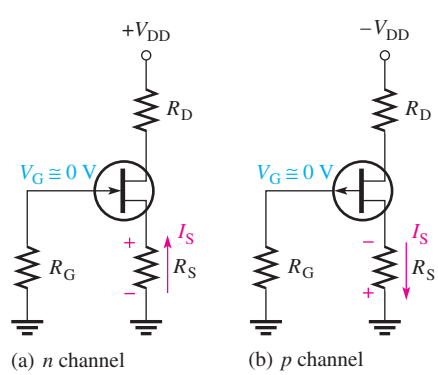

www.EngineeringBooksPdf.com

For the n-channel JFET in Figure 40(a), I_S produces a voltage drop across R_S and makes the source positive with respect to ground. Since $I_S = I_D$ and $V_G = 0$, then $V_S = I_D R_S$. The gate-to-source voltage is

$$V_{GS} = V_G - V_S = 0\text{ V} - I_D R_S$$

Thus,

$$\boldsymbol{V_{GS} = -I_D R_S} \qquad \textbf{Equation 30}$$

For the p-channel JFET shown in Figure 40(b), the current through R_S produces a negative voltage at the source, making the gate positive with respect to the source. Therefore, since $I_S = I_D$, the gate-to-source voltage is

$$\boldsymbol{V_{GS} = +I_D R_S} \qquad \textbf{Equation 31}$$

In the following analysis, the n-channel JFET is used for illustration. Keep in mind that analysis of the p-channel JFET is the same except for opposite polarity voltages.

The drain voltage with respect to ground is

$$\boldsymbol{V_D = V_{DD} - I_D R_D} \qquad \textbf{Equation 32}$$

Since $V_S = I_D R_S$, the drain-to-source voltage is

$$V_{DS} = V_D - V_S$$

$$\boldsymbol{V_{DS} = V_{DD} - I_D(R_D + R_S)} \qquad \textbf{Equation 33}$$

EXAMPLE 10

Find V_{DS} and V_{GS} in Figure 41, given that $I_D \cong 5$ mA.

▶ **FIGURE 41**

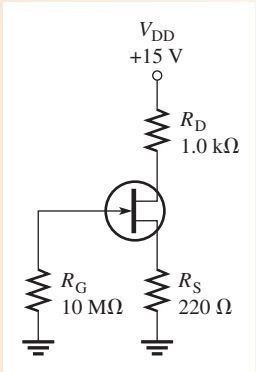

Solution

$$V_S = I_D R_S = (5\text{ mA})(220\ \Omega) = 1.1\text{ V}$$

$$V_D = V_{DD} - I_D R_D = 15\text{ V} - (5\text{ mA})(1.0\text{ k}\Omega) = 15\text{ V} - 5\text{ V} = 10\text{ V}$$

Therefore,

$$V_{DS} = V_D - V_S = 10\text{ V} - 1.1\text{ V} = \mathbf{8.9\ V}$$

Since $V_G = 0$ V,

$$V_{GS} = V_G - V_S = 0\text{ V} - 1.1\text{ V} = \mathbf{-1.1\ V}$$

Related Problem Determine V_{DS} and V_{GS} in Figure 41 when $I_D = 8$ mA. Assume that $R_D = 860\ \Omega$, $R_S = 390\ \Omega$, and $V_{DD} = 12$ V.

Open Multisim file E17-10. Measure V_{DS} and V_{GS}.

www.EngineeringBooksPdf.com

D-MOSFET Biasing

Recall that depletion/enhancement MOSFETs can be operated with either positive or negative values of V_{GS}. A simple bias method, called *zero bias,* is to set $V_{GS} = 0$ V so that an ac signal at the gate varies the gate-to-source voltage above and below this bias point. A MOSFET with zero bias is shown in Figure 42. Since $V_{GS} = 0$ V, $I_D = I_{DSS}$ as indicated. $\boldsymbol{I_{DSS}}$ is defined as the drain current when $V_{GS} = 0$ V. The drain-to-source voltage is expressed as

Equation 34

$$\boldsymbol{V_{DS} = V_{DD} - I_{DSS}R_D}$$

▶ **FIGURE 42**

A zero-biased D-MOSFET.

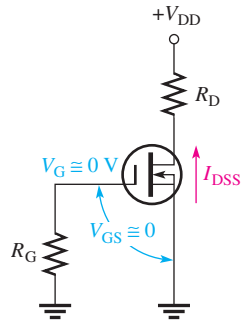

EXAMPLE 11

Determine the drain-to-source voltage in the circuit of Figure 43. The MOSFET data sheet gives $V_{GS(off)} = -8$ V and $I_{DSS} = 12$ mA.

▶ **FIGURE 43**

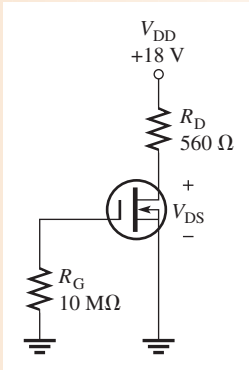

Solution Since $I_D = I_{DSS} = 12$ mA, the drain-to-source voltage is

$$V_{DS} = V_{DD} - I_{DSS}R_D = 18\text{ V} - (12\text{ mA})(560\ \Omega) = \mathbf{11.3\ V}$$

Related Problem Find V_{DS} in Figure 43 when $V_{GS(off)} = -10$ V and $I_{DSS} = 20$ mA.

E-MOSFET Biasing

Recall that enhancement-only MOSFETs must have a V_{GS} greater than the threshold value, $V_{GS(th)}$. Figure 44 shows two ways to bias an E-MOSFET where an *n*-channel device is used for illustration. In either bias arrangement, the purpose is to make the gate voltage more positive than the source by an amount exceeding $V_{GS(th)}$.

In the drain-feedback bias circuit in Figure 44(a), there is negligible gate current and, therefore, no voltage drop across R_G. As a result, $V_{GS} = V_{DS}$.

www.EngineeringBooksPdf.com

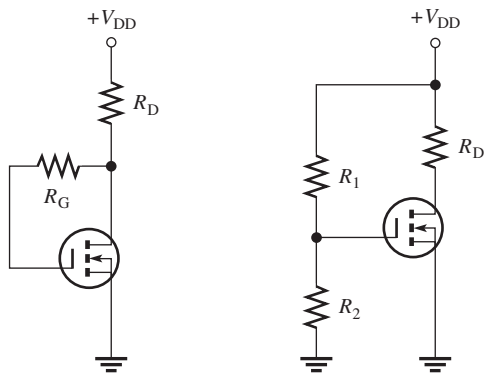

(a) Drain-feedback bias (b) Voltage-divider bias

FIGURE 44

E-MOSFET biasing arrangements.

Equations for the voltage-divider bias in Figure 44(b) are as follows:

$$V_{GS} = \left(\frac{R_2}{R_1 + R_2}\right)V_{DD} \qquad \text{Equation 35}$$

$$V_{DS} = V_{DD} - I_D R_D \qquad \text{Equation 36}$$

EXAMPLE 12

Determine the amount of drain current in Figure 45. The MOSFET has a $V_{GS(th)}$ of 3 V.

FIGURE 45

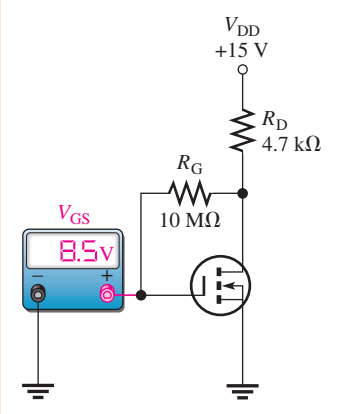

Solution The meter indicates that $V_{GS} = 8.5$ V. Since this is a drain feedback configuration, $V_{DS} = V_{GS} = 8.5$ V. Use Ohm's law to find the current.

$$I_D = \frac{V_{DD} - V_{DS}}{R_D} = \frac{15\text{ V} - 8.5\text{ V}}{4.7\text{ k}\Omega} = \mathbf{1.38\text{ mA}}$$

Related Problem Determine I_D if the meter in Figure 45 reads 5 V.

SECTION 5 CHECKUP

1. Name the three terminals of a FET.
2. An *n*-channel JFET requires a (positive, negative, or 0) V_{GS}.
3. How is the drain current controlled in a JFET?

www.EngineeringBooksPdf.com

4. In a certain self-biased *n*-channel JFET circuit, $I_D = 8$ mA and $R_S = 1.0$ kΩ. Determine V_{GS}.
5. Name two types of MOSFETs.
6. If the gate-to-source voltage in a depletion/enhancement MOSFET is 0 V, is there current from drain to source?
7. If the gate-to-source voltage in an E-MOSFET is 0 V, is there current from drain to source?
8. For a D-MOSFET biased at $V_{GS} = 0$ V, is the drain current equal to 0 V, I_{GSS}, or I_{DSS}?
9. For an *n*-channel E-MOSFET with $V_{GS(th)} = 2$ V, V_{GS} must be in excess of what value in order to conduct?

6 FET AMPLIFIERS

Field-effect transistors, both JFETs and MOSFETs, can be used as amplifiers in any of the circuit configurations similar to those for the bipolar junction transistor. The FET configurations are common-source, common-drain, and common-gate. FET configurations are similar to the BJT configurations of common-emitter, common-collector, and common-base, respectively. Like the BJT common-base configuration, the FET common-gate configuration is seldom used and will not be covered. FETs, like BJTs, can be used for both class A and class B operation, but the coverage here is limited to class A.

After completing this section, you should be able to

- **Analyze two types of FET amplifier configurations**
  - Calculate the transconductance of a FET
  - Analyze a common-source amplifier
  - Analyze a common-drain amplifier

Transconductance of a FET

Recall that in a bipolar junction transistor, the base current controls the collector current, and the relationship between these two currents is expressed as $I_c = \beta_{ac} I_b$. In a FET, the gate voltage controls the drain current. An important FET parameter is the **transconductance**, g_m, which is defined as

Equation 37

$$g_m = \frac{I_d}{V_{gs}}$$

The transconductance is one factor that determines the voltage gain of a FET amplifier. On data sheets, the transconductance is sometimes called the *forward transadmittance* and is designated y_{fs} with units of siemens (S). You will still find some data sheets using the older unit *mho* for y_{fs}.

Common-Source (CS) Amplifiers

A self-biased *n*-channel **common source (CS)** JFET amplifier with an ac source capacitively coupled to the gate is shown in Figure 46. The resistor R_G serves two purposes: (a) It keeps the gate at approximately 0 V dc (because I_{GSS} is extremely small), and (b) its large value (usually several megohms) prevents loading of the ac signal source. I_{GSS} is the gate reverse current in a FET, which is measured when it is reverse-biased. The bias voltage is created by the drop across R_S. The bypass capacitor, C_3, keeps the source of the FET effectively at ac ground.

www.EngineeringBooksPdf.com

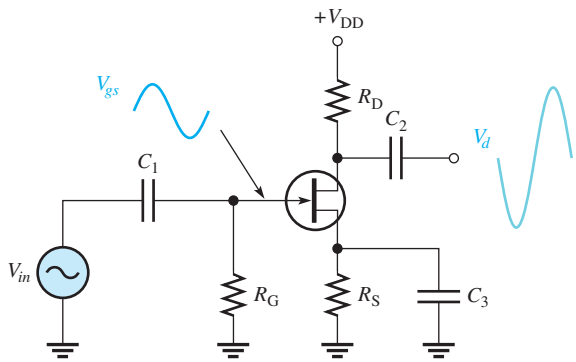

FIGURE 46

JFET common-source amplifier.

The signal voltage causes the gate-to-source voltage to swing above and below its Q-point value, causing a swing in drain current. As the drain current increases, the voltage drop across R_D also increases, causing the drain voltage (with respect to ground) to decrease.

The drain current swings above and below its Q-point value in phase with the gate-to-source voltage. The drain-to-source voltage swings above and below its Q-point value 180° out of phase with the gate-to-source voltage, as illustrated in Figure 46.

D-MOSFET A zero-biased *n*-channel D-MOSFET with an ac source capacitively coupled to the gate is shown in Figure 47. The gate is at approximately 0 V dc and the source terminal is at ground, thus making $V_{GS} = 0$ V.

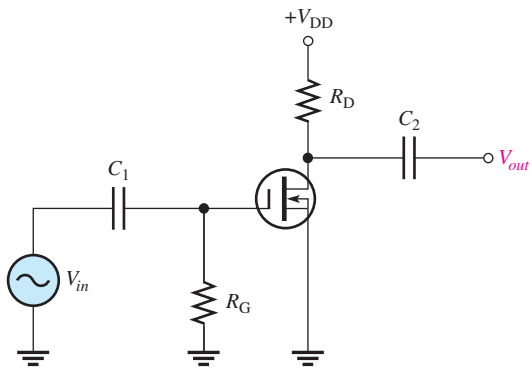

FIGURE 47

Zero-biased D-MOSFET common-source amplifier.

The signal voltage causes V_{gs} to swing above and below its 0 value, producing a swing in I_d. The negative swing in V_{gs} produces the depletion mode, and I_d decreases. The positive swing in V_{gs} produces the enhancement mode, and I_d increases.

E-MOSFET Figure 48 shows a voltage-divider-biased, *n*-channel E-MOSFET with an ac signal source capacitively coupled to the gate. The gate is biased with a positive voltage such that $V_{GS} > V_{GS(th)}$, where $V_{GS(th)}$ is the threshold value.

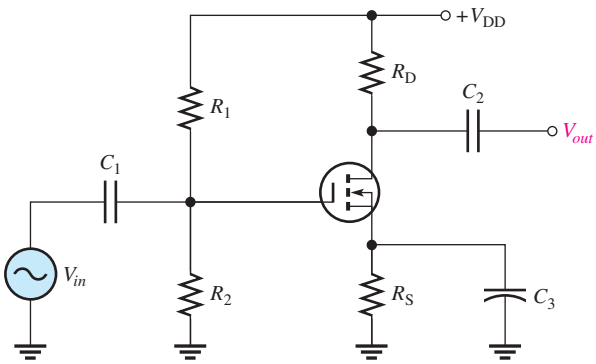

FIGURE 48

Common-source E-MOSFET amplifier with voltage-divider bias.

www.EngineeringBooksPdf.com

As with the JFET and D-MOSFET, the signal voltage produces a swing in V_{gs} above and below its Q-point value. This swing, in turn, causes a swing in I_d. Operation is entirely in the enhancement mode.

Voltage Gain Voltage gain, A_v, of an amplifier always equals V_{out}/V_{in}. In the case of the CS amplifier, V_{in} is equal to V_{gs}, and V_{out} is equal to the signal voltage developed across R_D, which is I_dR_D. Thus,

$$A_v = \frac{I_dR_D}{V_{gs}}$$

Since $g_m = I_d/V_{gs}$, the common-source voltage gain is

Equation 38

$$\boldsymbol{A_v = g_mR_D}$$

Input Resistance Because the input to a CS amplifier is at the gate, the input resistance is extremely high. Ideally, it approaches infinity and can be neglected. The high input resistance is produced by the reverse-biased *pn* junction in a JFET and by the insulated gate structure in a MOSFET.

The actual input resistance seen by the signal source is the gate-to-ground resistor R_G in parallel with the FET's input resistance, V_{GS}/I_{GSS}. The reverse leakage current I_{GSS} is typically given on the data sheet for a specific value of V_{GS} so that the input resistance of the device can be calculated.

EXAMPLE 13

(a) What is the total output voltage (dc + ac) of the amplifier in Figure 49? The g_m is 1800 μS, I_D is 2 mA, $V_{GS(off)}$ is -3.5 V, and I_{GSS} is 15 nA.

(b) What is the input resistance seen by the signal source?

▶ **FIGURE 49**

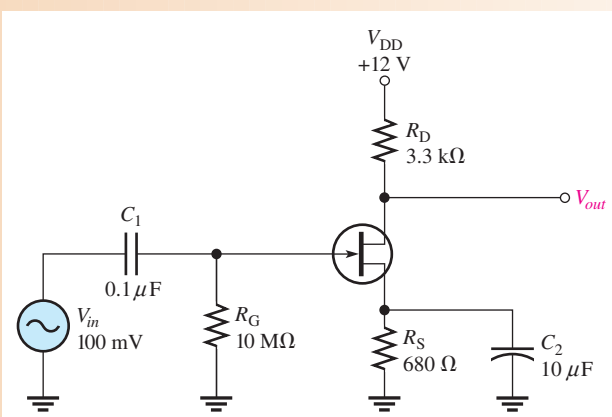

Solution **(a)** First, find the dc output voltage.

$$V_D = V_{DD} - I_DR_D = 12\text{ V} - (2\text{ mA})(3.3\text{ k}\Omega) = 5.4\text{ V}$$

Next, find the ac output voltage by using the gain formula.

$$A_v = \frac{V_{out}}{V_{in}} = g_mR_D$$

$$V_{out} = g_mR_DV_{in} = (1800\ \mu\text{S})(3.3\text{ k}\Omega)(100\text{ mV}) = 594\text{ mV}$$

The total output voltage is an ac signal with a peak-to-peak value of

$$V_{out(tot)} = 594\text{ mV} \times 2.828 = \mathbf{1.67\ V, riding\ on\ a\ dc\ level\ of\ 5.4\ V}$$

www.EngineeringBooksPdf.com

(b) The input resistance is determined as follows (since $V_G = 0$ V):

$$V_{GS} = I_D R_S = (2\text{ mA})(680\ \Omega) = 1.36\text{ V}$$

The input resistance at the gate of the JFET is

$$R_{IN(gate)} = \frac{V_{GS}}{I_{GSS}} = \frac{1.36\text{ V}}{15\text{ nA}} = 91\text{ M}\Omega$$

The input resistance seen by the signal source is

$$R_{in} = R_G \| R_{IN(gate)} = 10\text{ M}\Omega \| 91\text{ M}\Omega = \mathbf{9.0\ M\Omega}$$

Related Problem What is the total output voltage in the amplifier of Figure 49 if V_{DD} is changed to 15 V? Assume the other parameters are the same.

Common-Drain (CD) Amplifier

A **common-drain (CD)** JFET amplifier is shown in Figure 50 with voltages indicated. Self-biasing is used in this circuit. The input signal is applied to the gate through a coupling capacitor, and the output is at the source terminal. There is no drain resistor. This circuit, of course, is analogous to the bipolar emitter-follower and is sometimes called a *source-follower.*

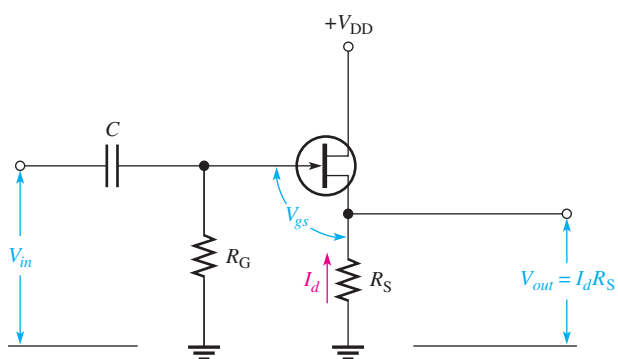

FIGURE 50
JFET common-drain amplifier (source-follower).

Voltage Gain As in all amplifiers, the voltage gain is $A_v = V_{out}/V_{in}$. For the source-follower, V_{out} is $I_d R_S$ and V_{in} is $V_{gs} + I_d R_S$, as shown in Figure 50. Therefore, the gate-to-source voltage gain is $I_d R_S/(V_{gs} + I_d R_S)$. Substituting $I_d = g_m V_{gs}$ into the expression gives the following result:

$$A_v = \frac{g_m V_{gs} R_S}{V_{gs} + g_m V_{gs} R_S}$$

Canceling V_{gs} yields

$$\boldsymbol{A_v = \frac{g_m R_S}{1 + g_m R_S}}$$ **Equation 39**

Notice here that *the gain is always less than 1.* If $g_m R_S \gg 1$, then a good approximation is $A_v \cong 1$. Since the output voltage is at the source, it is in phase with the gate (input) voltage.

Input Resistance Because the input signal is applied to the gate, the input resistance seen by the input signal source is extremely high. The gate resistor R_G, in parallel with the input resistance looking in at the gate, is the total input resistance.

www.EngineeringBooksPdf.com

EXAMPLE 14

(a) Determine the voltage gain of the amplifier in Figure 51(a) using the data sheet information in Figure 51(b).

(b) Determine the input resistance at 25°C. Assume minimum data sheet values where available.

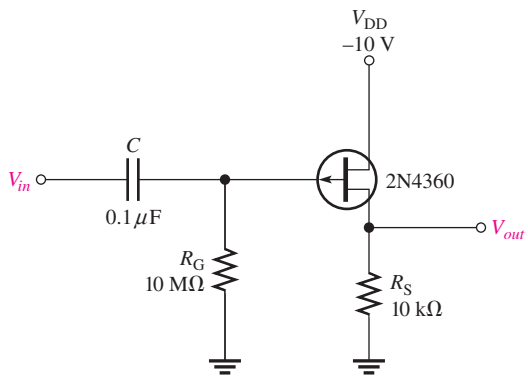

(a)

*ELECTRICAL CHARACTERISTICS (T_A = 25°C unless otherwise noted)

Characteristic	Symbol	Min	Max	Unit
OFF CHARACTERISTICS				
Gate-Source Breakdown Voltage (I_G = 10 μAdc, V_{DS} = 0)	$V_{(BR)GSS}$	20	–	Vdc
Gate-Source Cutoff Voltage (V_{DS} = –10 Vdc, I_D = 1.0 μAdc)	$V_{GS(off)}$	0.7	10	Vdc
Gate Reverse Current (V_{GS} = 15 Vdc, V_{DS} = 0)	I_{GSS}	–	10	nAdc
(V_{GS} = 15 Vdc, V_{DS} = 0, T_A = 65°C)		–	0.5	μAdc
ON CHARACTERISTICS				
Zero-Gate Voltage Drain Current (Note 1) (V_{DS} = –10 Vdc, V_{GS} = 0)	I_{DSS}	3.0	30	mAdc
Gate-Source Breakdown Voltage (V_{DS} = –10 Vdc, I_D = 0.3 mAdc)	V_{GS}	0.4	9.0	Vdc
SMALL SIGNAL CHARACTERISTICS				
Drain-Source "ON" Resistance (V_{GS} = 0, I_D = 0, f = 1.0 kHz)	$r_{ds(on)}$	–	700	Ohms
Forward Transadmittance (Note 1) (V_{DS} = –10 Vdc, V_{GS} = 0, f = 1.0 kHz)	$\lvert y_{fs} \rvert$	2000	8000	μS
Forward Transconductance (V_{DS} = –10 Vdc, V_{GS} = 0, f = 1.0 MHz)	$Re(y_{fs})$	1500	–	μS
Output Admittance (V_{DS} = –10 Vdc, V_{GS} = 0, f = 1.0 kHz)	$\lvert y_{os} \rvert$	–	100	μS
Input Capacitance (V_{DS} = –10 Vdc, V_{GS} = 0, f = 1.0 MHz)	C_{iss}	–	20	pF
Reverse Transfer Capacitance (V_{DS} = –10 Vdc, V_{GS} = 0, f = 1.0 MHz)	C_{rss}	–	5.0	pF
Common-Source Noise Figure (V_{DS} = –10 Vdc, I_D = 1.0 mAdc, R_G = 1.0 Megohm, f = 100 Hz)	NF	–	5.0	dB
Equivalent Short-Circuit Input Noise Voltage (V_{DS} = –10 Vdc, I_D = 1.0 mAdc, f = 100 Hz, BW = 15 Hz)	E_n	–	0.19	$\mu V/\sqrt{Hz}$

*Indicates JEDEC Registered Data.

Note 1: Pulse Test: Pulse Width ≤ 630 ms, Duty Cycle ≤ 10%.

(b)

▲ **FIGURE 51**

Solution **(a)** From the data sheet, $g_m = y_{fs} = 2000\ \mu S$ minimum. The gain is

$$A_v \cong \frac{g_m R_S}{1 + g_m R_S} = \frac{(2000\ \mu S)(10\ k\Omega)}{1 + (2000\ \mu S)(10\ k\Omega)} = \mathbf{0.952}$$

www.EngineeringBooksPdf.com

(b) From the data sheet, $I_{GSS} = 10$ nA at $V_{GS} = 15$ V and $T_A = 25°C$. Therefore,

$$R_{IN(gate)} = \frac{15\text{ V}}{10\text{ nA}} = 1500\text{ M}\Omega$$

$$R_{IN} = R_G \| R_{IN(gate)} = 10\text{ M}\Omega \| 1500\text{ M}\Omega = \mathbf{9.93\ M\Omega}$$

Related Problem Repeat part (b) for $T_A = 65°C$.

SECTION 6 CHECKUP

1. What factors determine the voltage gain of a CS FET amplifier?
2. A certain CS amplifier has an $R_D = 1.0$ kΩ. When a load resistance of 1.0 kΩ is capacitively coupled to the drain, how much does the gain change?

7 FEEDBACK OSCILLATORS

An **oscillator** is a circuit that produces a repetitive waveform on its output with only the dc supply voltage as an input. The output voltage can be either sinusoidal or nonsinusoidal, depending on the type of oscillator. **Feedback** oscillator operation is based on the principle of positive feedback. In this section, we will examine feedback oscillators, look at the general conditions required for oscillation to occur, and introduce several basic oscillator circuits.

After completing this section, you should be able to

- **Discuss the theory and analyze the operation of several types of oscillators**
  - Explain what an oscillator is
  - Discuss positive feedback
  - Describe the conditions for oscillation
  - Identify an *RC* oscillator and discuss its basic operation
  - Identify a Colpitts oscillator and discuss its basic operation
  - Identify a Hartley oscillator and discuss its basic operation
  - Identify a crystal oscillator and discuss its basic operation
  - Describe a basic quartz crystal

Oscillator Principles

The basic concept of an oscillator is illustrated in Figure 52. Essentially, an oscillator converts electrical energy in the form of dc to electrical energy in the form of ac. A basic oscillator consists of a transistor or op-amp amplifier for gain and a positive feedback circuit that produces phase shift and provides attenuation, as shown in Figure 53.

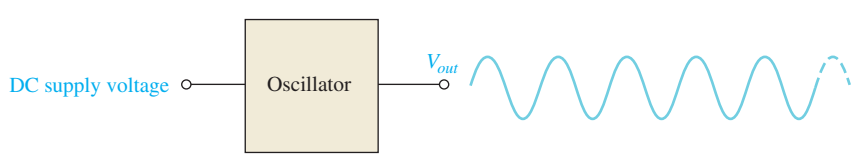

◀ FIGURE 52

The basic oscillator concept showing a sinusoidal output waveform.

www.EngineeringBooksPdf.com

▶ FIGURE 53

Basic elements of an oscillator.

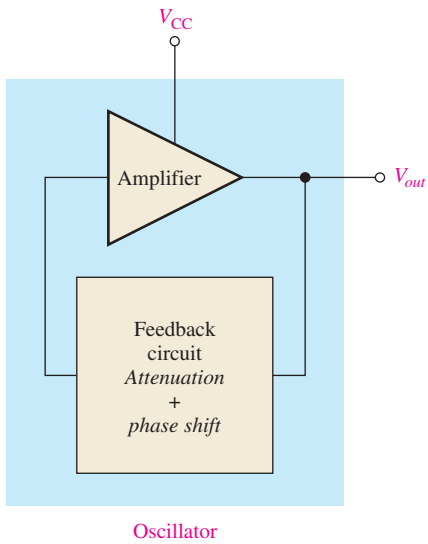

Positive Feedback **Positive feedback** is characterized by the condition wherein a portion of the output voltage of an amplifier is fed back to the input with no net phase shift, resulting in a reinforcement of the output signal. The basic idea is illustrated in Figure 54. As you can see, the in-phase feedback voltage is amplified to produce the output voltage, which in turn produces the feedback voltage. That is, a loop is created in which the signal sustains itself with no input signal and a continuous sinusoidal output is produced. This phenomenon is called *oscillation.*

▶ FIGURE 54

Positive feedback produces oscillation.

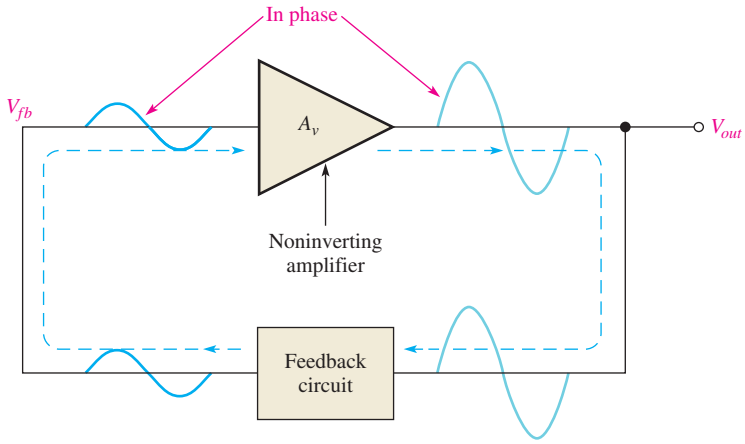

Conditions for Oscillation Two conditions, illustrated in Figure 55, are required for a sustained state of oscillation:

1. The phase shift around the feedback loop must be 0°.
2. The loop gain (voltage gain, A_{cl}, around the closed feedback loop) must be 1 **(unity gain)**.

The voltage gain around the closed feedback loop (A_{cl}) is the product of the amplifier gain (A_v) and the attenuation (B) of the feedback circuit.

Equation 40

$$A_{cl} = A_v B$$

If a sinusoidal wave is the desired output, a loop gain greater than 1 will rapidly cause the output to saturate at both peaks of the waveform, producing unacceptable distortion. To avoid this, some form of gain control must be used to keep the loop gain at exactly 1, once

www.EngineeringBooksPdf.com

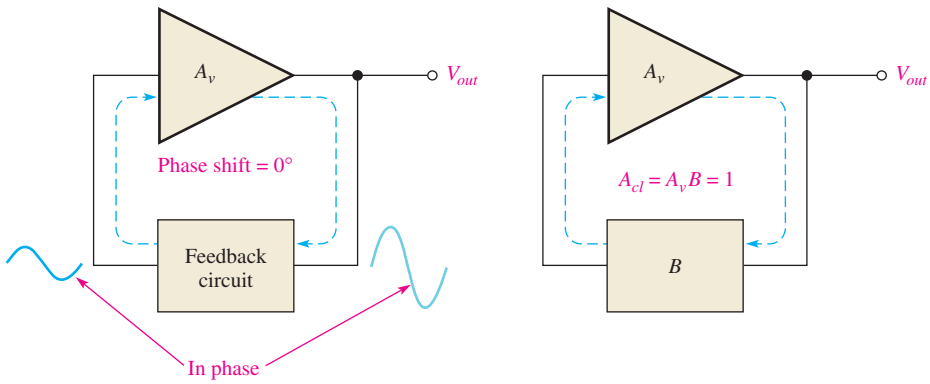

(a) The phase shift around the loop is 0°.

(b) The closed loop gain is 1.

FIGURE 55

Conditions for oscillation.

oscillations have started. For example, if the attenuation of the feedback network is 0.01, the amplifier must have a gain of exactly 100 to overcome this attenuation and not create unacceptable distortion ($0.01 \times 100 = 1.0$). An amplifier gain of greater than 100 will cause the oscillator to limit both peaks of the waveform.

Start-Up Conditions So far, you have learned what it takes for a feedback oscillator to produce a continuous sinusoidal output. Now let's examine the requirements for the oscillation to start when the dc supply voltage is turned on. As you know, the unity-gain condition must be met for oscillation to be sustained. For oscillation to begin, the voltage gain around the positive feedback loop must be greater than 1 so that the amplitude of the output can build up to a desired level. The gain must then decrease to 1 so that the output stays at the desired level and oscillation is sustained. The conditions for both starting and sustaining oscillation are illustrated in Figure 56.

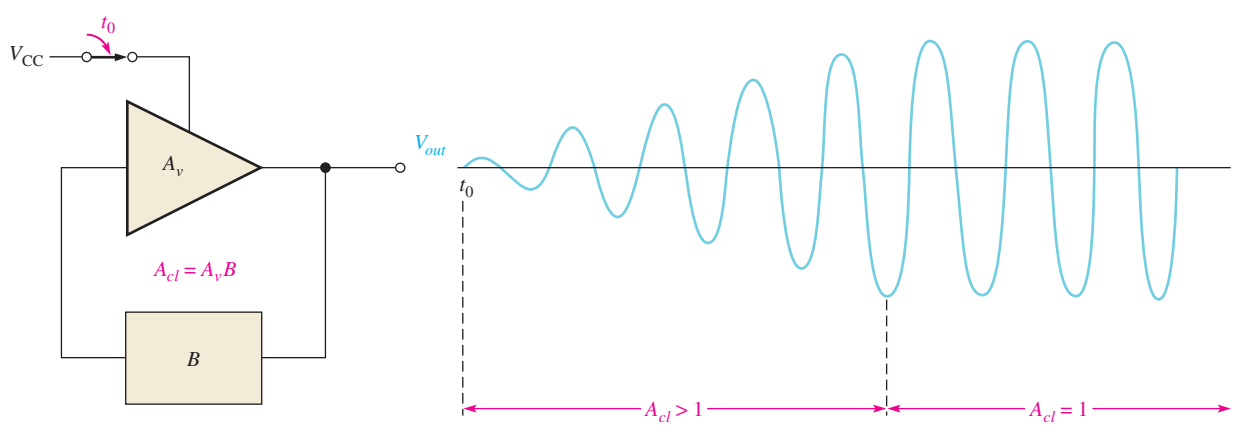

FIGURE 56

When oscillation starts at t_0, the condition $A_{cl} > 1$ causes the sinusoidal output voltage amplitude to build up to a desired level, where A_{cl} decreases to 1 and maintains the desired amplitude.

A question that normally arises is this: If the oscillator is off (no dc voltage) and there is no output voltage, how does a feedback signal originate to start the positive feedback build-up process? Initially, when power is turned on, a small positive feedback voltage develops from thermally produced broad-band noise in the resistors or other components or from turn-on transients. The feedback circuit permits only a voltage with a frequency equal to the selected oscillation frequency to appear in phase on the amplifier's input. This initial feedback voltage is amplified and continually reinforced, resulting in a buildup of the output voltage as previously discussed.

www.EngineeringBooksPdf.com

The *RC* Phase-Shift Oscillator

The basic *RC* phase-shift oscillator shown in Figure 57 uses an *RC* circuit as its feedback circuit. In this case, three *RC* lag circuits have a total phase shift of 180°. The common-emitter transistor contributes a 180° phase shift. The total phase shift through the amplifier and feedback circuit therefore is 360°, which is effectively 0° (no phase shift). The attenuation of the *RC* circuit and the gain of the amplifier must be such that the overall gain around the feedback loop is equal to 1 at the frequency of oscillation. This circuit will produce a continuous sinusoidal output.

▶ **FIGURE 57**

A basic *RC* phase-shift oscillator.

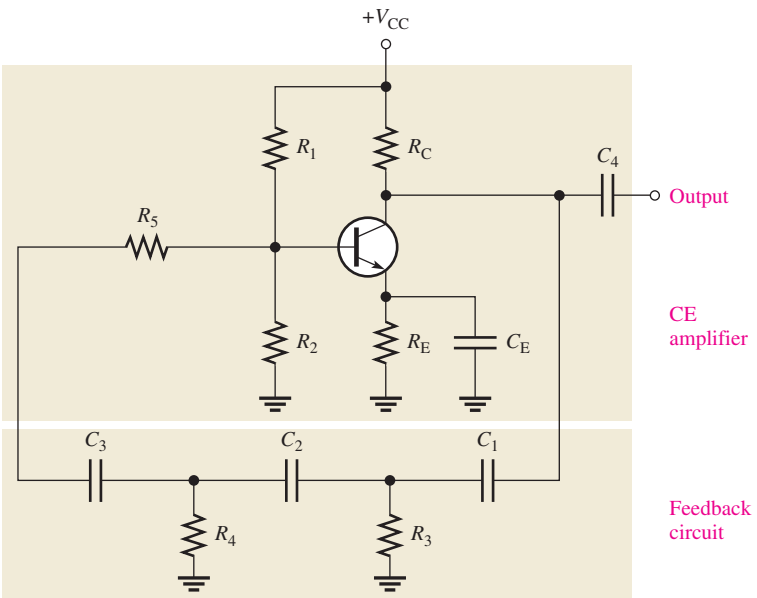

The Colpitts Oscillator

One basic type of tuned oscillator is the Colpitts, named after its inventor. As shown in Figure 58, this type of oscillator uses an *LC* circuit in the feedback loop to provide the

▶ **FIGURE 58**

A basic Colpitts oscillator.

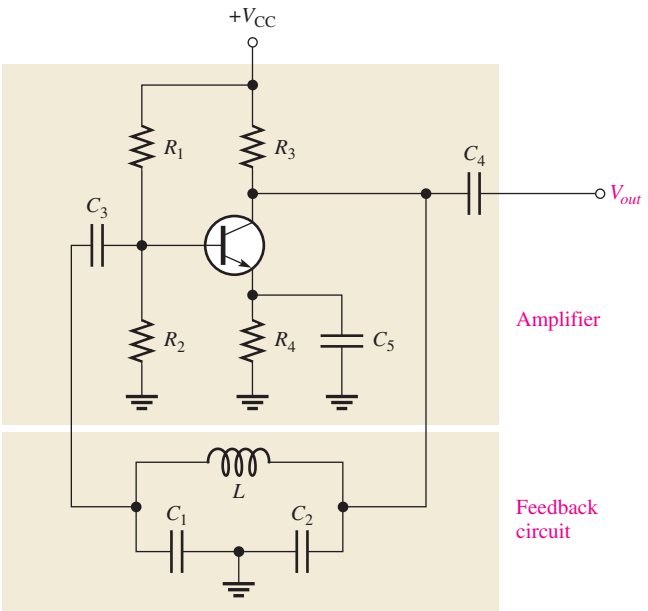

www.EngineeringBooksPdf.com

necessary phase shift and to act as a filter that passes only the specified frequency of oscillation. The approximate frequency of oscillation is established by the values of C_1, C_2, and L according to the following familiar formula:

$$f_r \cong \frac{1}{2\pi\sqrt{LC_T}}$$ **Equation 41**

Because the capacitors effectively appear in series around the tank circuit, the total capacitance is

$$C_T = \frac{C_1C_2}{C_1 + C_2}$$ **Equation 42**

The Hartley Oscillator

Another basic type of oscillator circuit is the Hartley, which is similar to the Colpitts except that the feedback circuit consists of two inductors and one capacitor, as shown in Figure 59.

The frequency of oscillation for the Hartley oscillator is

$$f_r \cong \frac{1}{2\pi\sqrt{L_TC_5}}$$ **Equation 43**

The total inductance is the series combination of L_1 and L_2.

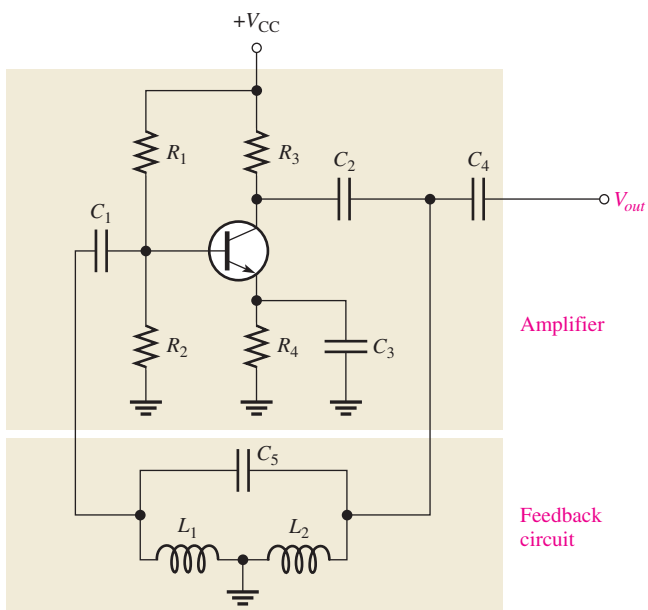

FIGURE 59
A basic Hartley oscillator.

The Crystal Oscillator

A crystal oscillator is essentially a tuned-circuit oscillator that uses a quartz crystal as the resonant tank circuit. Other types of crystals can be used, but quartz is the most prevalent. Crystal oscillators offer greater frequency stability than other types.

Quartz is a substance found in nature that exhibits a property called the *piezoelectric effect.* When a changing mechanical stress is applied across the crystal to cause it to vibrate, a voltage is developed at the frequency of the mechanical vibration. Conversely, when an ac voltage is applied across the crystal, it vibrates at the frequency of the applied voltage.

www.EngineeringBooksPdf.com

The symbol for a crystal is shown in Figure 60(a), the electrical equivalent is shown in part (b), and a typical mounted crystal is shown in part (c). In construction, a slab of quartz is mounted as shown in Figure 60(d).

▶ **FIGURE 60**

Quartz crystal.

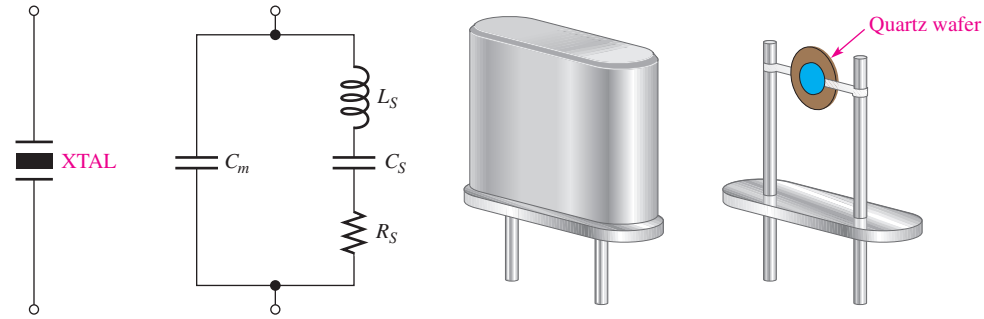

(a) Symbol (b) Electrical equivalent (c) Typical packaged crystal (d) Basic construction (without case)

Series resonance occurs in the crystal when the reactances in the series branch are equal. Parallel resonance occurs, at a higher frequency, when the inductive reactance of L_S equals the reactance of the parallel capacitor C_m.

A crystal oscillator using the crystal as a series resonant tank circuit is shown in Figure 61(a). The impedance of the crystal is *minimum* at the series resonance, thus providing maximum feedback. The crystal tuning capacitor, C_C, is used to "fine-tune" the oscillator frequency by "pulling" the resonant frequency of the crystal slightly up or down.

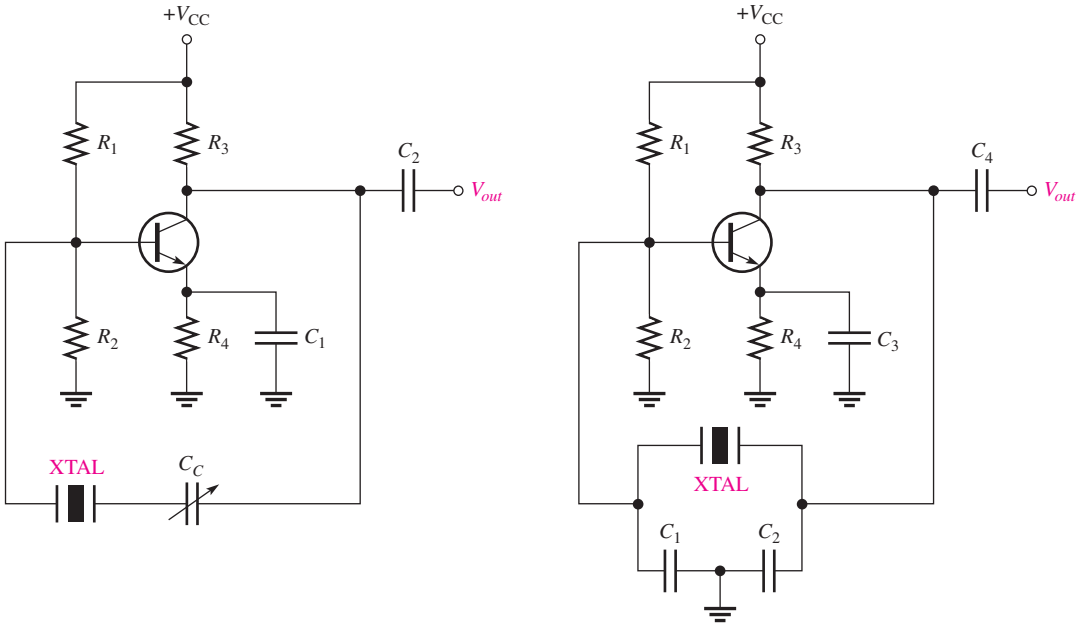

(a) (b)

▲ **FIGURE 61**

Basic crystal oscillators.

A modified Colpitts configuration, shown in Figure 61(b), uses the crystal in its parallel resonant mode. The impedance of the crystal is maximum at parallel resonance, thus developing the maximum voltage across both C_1 and C_2. The voltage across C_1 is fed back to the input.

www.EngineeringBooksPdf.com

SECTION 7 CHECKUP

1. What is an oscillator?
2. What type of feedback does a feedback oscillator use and what is the purpose of the feedback circuit?
3. What are the conditions required for a circuit to oscillate?
4. What are the start-up conditions for an oscillator?
5. Name four types of feedback oscillators.
6. Describe the basic difference between the Colpitts and Hartley oscillators.
7. What is the main advantage of a crystal oscillator?

8 TROUBLESHOOTING

In working with any circuit, you must first know how it is supposed to work before you can troubleshoot it for a failure. A two-stage capacitively coupled amplifier is used to illustrate a typical troubleshooting procedure. This is simply two CE amplifiers with the output of one connected through a capacitor to the input of the other one.

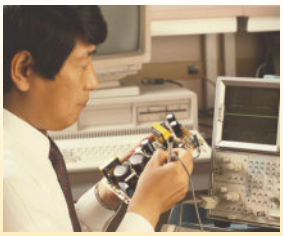

After completing this section, you should be able to

- **Troubleshoot amplifier circuits**
  - Describe the process of signal tracing

The correct signal levels and dc voltage levels (approximate) for the capacitively coupled two-stage amplifier are shown in Figure 62.

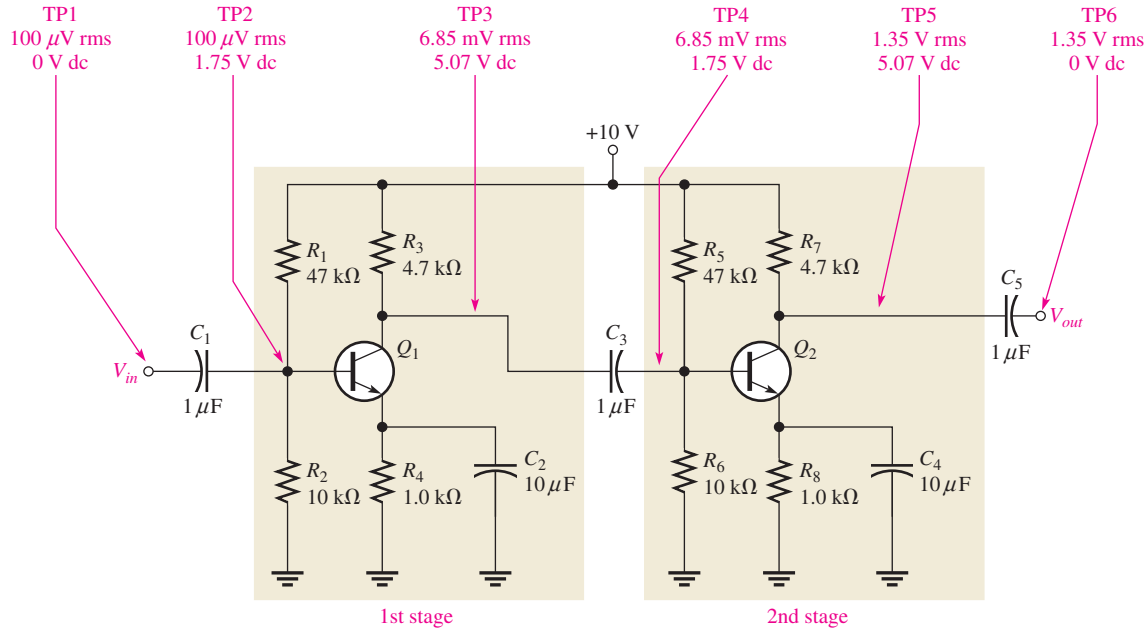

▲ **FIGURE 62**

Two-stage amplifier with correct ac and dc voltage levels indicated.

www.EngineeringBooksPdf.com

Troubleshooting Procedure

The APM (analysis, planning, and measurement) approach to troubleshooting will be used.

Analysis It has been found that there is no output voltage, V_{out}. You have also determined that the circuit did work properly and then failed. A visual check of the circuit board or assembly for obvious problems such as broken or poor connections, solder splashes, wire clippings, or burned components turns up nothing. You conclude that the problem is most likely a faulty component in the amplifier circuit or an open connection. Also, the dc supply voltage may not be correct or may be missing.

Planning You decide to use an oscilloscope to check the dc levels and the ac signals (some may prefer to use a DMM to measure the dc voltages) at certain test points (TPs). Also, you decide to apply the half-splitting method to trace the voltages in the circuit and use an in-circuit transistor tester if a transistor is suspected of being faulty.

In this example, the planning step is done in more detail by preparing a flowchart, as shown in Figure 63. Flowcharts like this are often prepared when there are many boards that need to be tested to help the technician work efficiently. This one uses the half-splitting

▶ **FIGURE 63**

Troubleshooting flowchart.

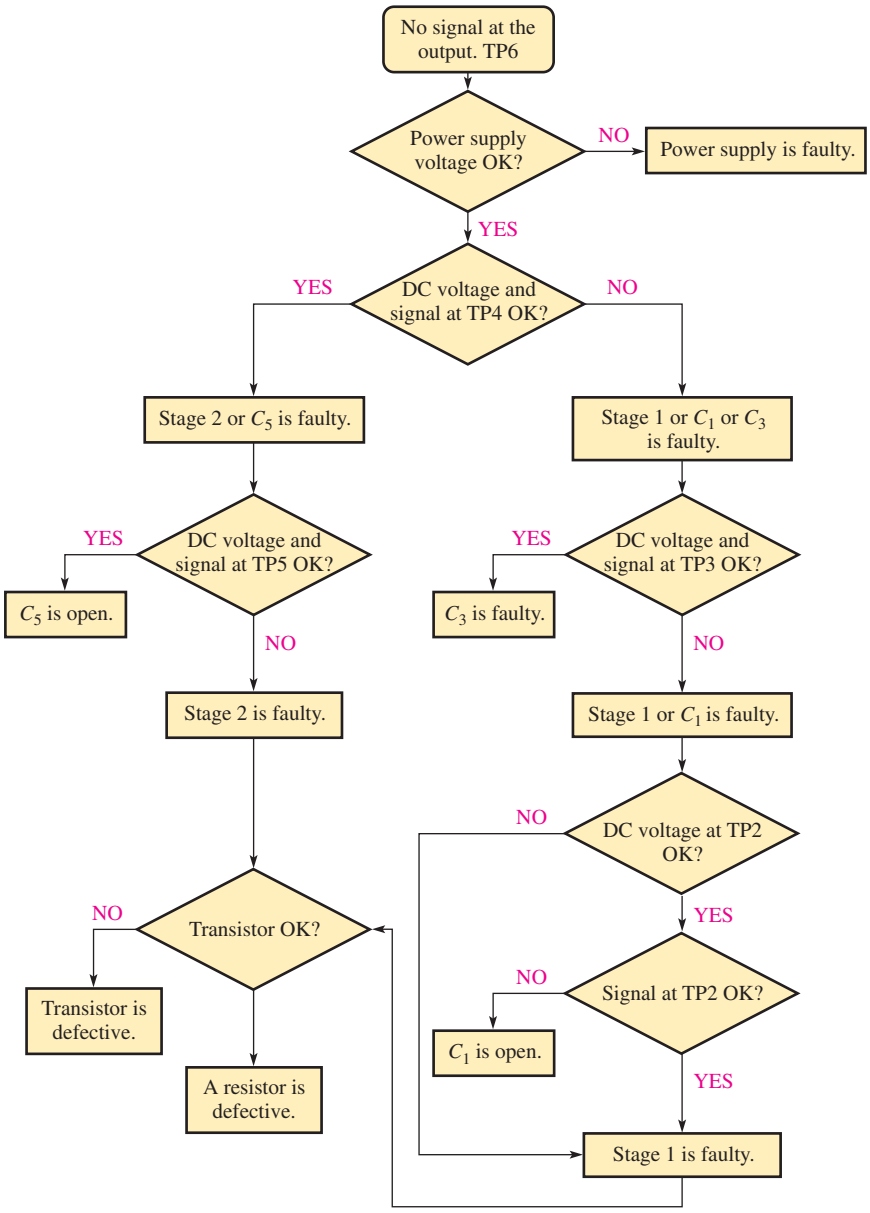

www.EngineeringBooksPdf.com

idea to isolate the problem as quickly as possible. The chart is based on the assumption that there is a correct input signal at TP1, but no output.

Measurement The following steps indicate the measurements and the reasoning process in isolating the fault.

Step 1: Check the dc supply voltage. If it is 10 V, the problem is in the amplifier circuit. If the dc voltage is absent or has an incorrect value, check the dc source and related connections for the problem.

Step 2: Check the dc voltage and the signal at the input to the second stage (TP4). If the correct dc voltage and signal are present at this point, the fault is in the second stage or the coupling capacitor C_5 is open. Go to Step 3.

If the dc voltage is incorrect or if there is no signal at TP4, the fault is in the first stage, C_1, or C_3, so go to Step 4.

Step 3: Check the dc voltage and the signal at the collector of Q_2 (TP5). If the dc voltage is correct and the signal is present at this point, the coupling capacitor C_5 is open. If the dc level is incorrect or there is no signal at TP5, the second stage is defective. Either the transistor Q_2, one of the resistors, or the bypass capacitor C_4 is faulty. Go to Step 6.

Step 4: Check the dc voltage and the signal at the collector of Q_1 (TP3). If the dc voltage is correct and the signal is present at this point, the coupling capacitor C_3 is faulty. If the dc voltage is incorrect or there is no signal at TP3, the first stage is defective or coupling capacitor C_1 is faulty. Go to Step 5.

Step 5: Check the dc voltage and the signal at TP2. If the dc voltage is correct but there is no signal at this point, the coupling capacitor C_1 is open. If there is a correct signal at TP2, the first stage is faulty. Go to Step 6. *Note:* To check the signal TP2, it will probably be necessary to apply a larger signal to the input at TP1 because it is very difficult or impossible to measure a 100 μV signal with typical test equipment.

Step 6: If you reach this step, one of the identical amplifier stages has been identified as having a faulty component or connection. The next step is to find the specific fault. If the dc collector voltage is at V_{CC}, the transistor is in cutoff or open. This could be caused by a bad transistor, an open bias resistor circuit (either R_1 or R_5, depending on the stage), an open emitter resistor, or open connection in the collector. If the dc collector voltage is approximately equal to the dc emitter voltage, the transistor is in saturation or shorted. This could be caused by a bad transistor, an open bias resistor (either R_2 or R_6, depending on the stage), an open collector resistor (either R_3 or R_7, depending on the stage), or a shorted contact. An in-circuit check of the transistor should be done at this point. If the transistor checks okay, begin checking for open resistors, or bad contacts.

Fault Analysis

As an additional example of isolating a component failure in a circuit, let's use a class A amplifier with the output monitored by an oscilloscope, as shown in Figure 64. As shown, the amplifier has a normal sinusoidal output when a sinusoidal input signal is applied.

Now, several incorrect output waveforms will be considered and the most likely causes discussed. In Figure 65(a), the scope displays a dc level equal to the dc supply voltage, indicating that the transistor is in cutoff. The possible causes of this condition are (a) the transistor is open from collector to emitter, (b) R_4 is open, preventing collector current, or (c) there is a problem with the bias circuit (R_1 open, R_2 shorted, or there is an open base lead). Condition (c) is the simplest to check—simply measure the dc base voltage to confirm bias is correct.

In Figure 65(b), the scope displays a dc level at the collector approximately equal to the emitter voltage. The two possible causes of this indication are (a) the transistor is shorted from collector to emitter, or (b) R_2 is open, causing the transistor to be biased in saturation. In the second case, a sufficiently large input signal can bring the transistor out of saturation on its negative peaks, resulting in short pulses on the output.

www.EngineeringBooksPdf.com

▶ **FIGURE 64**

Class A amplifier with correct output display.

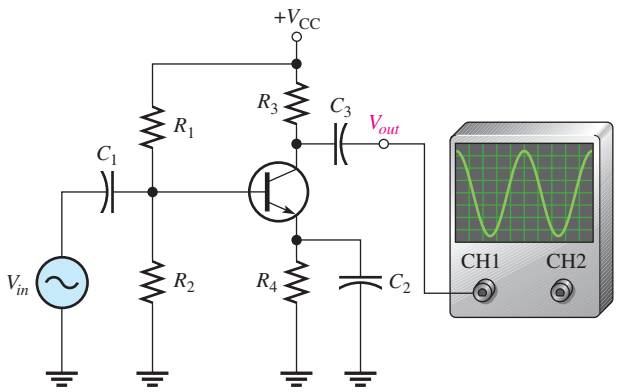

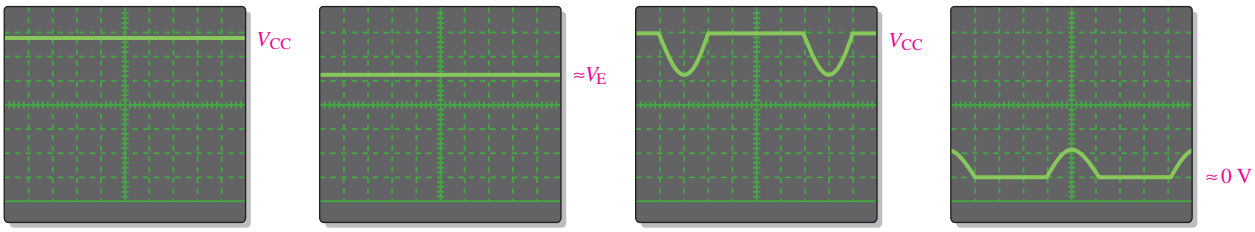

▲ **FIGURE 65**

Oscilloscope displays of output voltage for the amplifier in Figure 64, illustrating several types of failures.

In Figure 65(c), the scope displays an output waveform that is clipped at cutoff. Possible causes of this indication are (a) the Q-point has shifted down due to a wrong resistor value, or (b) R_1 is open, biasing the transistor in cutoff. In the second case, the input signal is sufficient to bring it out of cutoff for a small portion of the cycle.

In Figure 65(d), the scope displays an output waveform that is clipped at saturation. Again, it is possible that a wrong resistance value has caused a drastic shift in the Q-point up toward saturation, or R_2 is open, causing the transistor to be biased in saturation, and the input signal is bringing it out of saturation for a small portion of the cycle.

SECTION 8 CHECKUP

1. If C_4 in Figure 62 were open, how would the output signal be affected? How would the dc level at the collector of Q_2 be affected?
2. If R_5 in Figure 62 were open, how would the output signal be affected?
3. If the coupling capacitor C_3 in Figure 62 shorted out, would any of the dc voltages in the amplifier be changed? If so, which ones?
4. Assume that the base-emitter junction of Q_2 in Figure 62 shorts.
   (a) Will the ac signal at the base of Q_2 change? In what way?
   (b) Will the dc level at the base of Q_2 change? In what way?
5. What would you check for if you noticed clipping at both peaks of the output waveform in Figure 62?
6. A significant loss of gain in the amplifier of Figure 62 would most likely be caused by what type of failure?

www.EngineeringBooksPdf.com

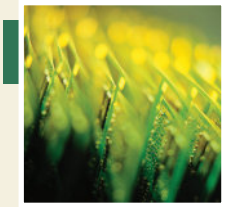

Application Assignment

PUTTING YOUR KNOWLEDGE TO WORK

This system has several parts, but in this assignment you are concerned with the transistor circuit that monitors the temperature changes in the fluid in a tank and provides a proportional output that is used to precisely control the temperature. In this application, the transistor is used as a dc amplifier.

Description of the System

The system in Figure 66 is a block diagram of a process control system that uses the principle of closed-loop feedback to maintain a substance at a constant temperature of 50°C ± 1°C. The temperature sensor in the tank is a thermistor, which is a temperature-sensitive resistor whose resistance has a negative temperature coefficient. The thermistor forms part of the bias circuit for the transistor detector.

A small change in temperature causes the resistance of the thermistor to change, which results in a proportional change in the output voltage from the transistor detector. Since thermistors are typically nonlinear devices, the purpose of the digital portions of the system is to precisely compensate for the nonlinear characteristic of the temperature detector in order to provide a continuous linear adjustment of the fuel flow to the burner to offset any small shift in temperature away from the desired value.

The temperature detector circuit board (in color in Figure 66) that you are concerned with in this application assignment is obviously only a small part of the total system. It is interesting, however, to see how the variations in a transistor's bias point can be used in a situation such as this. Although the digital portions of the system are not covered, they show that typical systems have various types of elements.

The temperature detector circuit board and the thermistor probe that mounts into the side of the tank are shown in Figure 67. The thermistor symbol and the case configuration of the *npn* transistor are included.

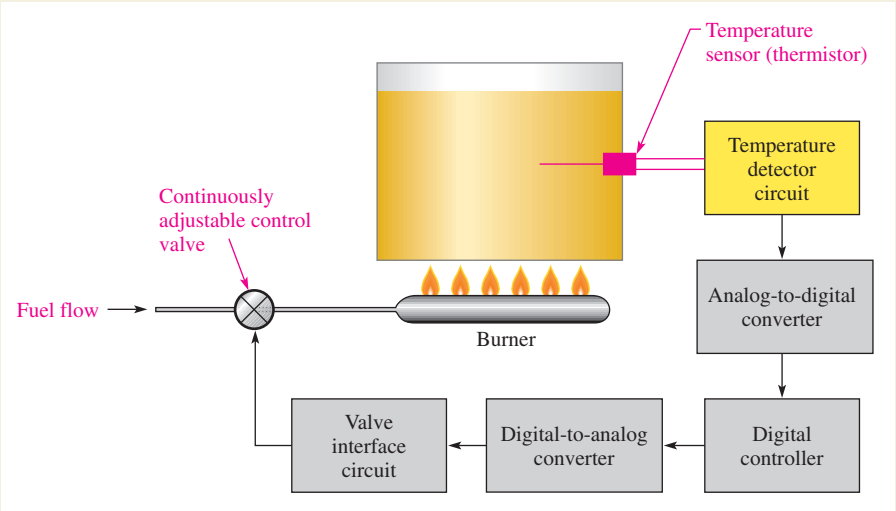

FIGURE 66

Block diagram of the industrial temperature-control system.

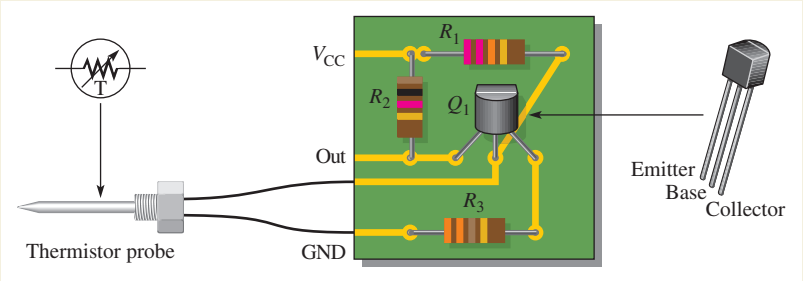

FIGURE 67

The temperature detector circuit.

www.EngineeringBooksPdf.com

Step 1: Relating the PC Board to the Schematic

Develop a schematic of the circuit board in Figure 67 including the thermistor. Arrange the schematic into a form that is familiar to you and identify the type of biasing used.

Step 2: Analyzing the Circuit

With a dc supply of +15 V, analyze the temperature detector circuit to determine the output voltage at 50°C and at 1°C above and below 50°C. Use 0.7 V for the base-emitter voltage. Assume $\beta_{DC} = 100$ for the transistor. Since accuracy on the graph is difficult to achieve for this small range, assume that the thermistor resistances for the controlled temperature range are as follows:

At $T = 50°C$, $R = 2.75\ k\Omega$

At $T = 49°C$, $R = 3.1\ k\Omega$

At $T = 51°C$, $R = 2.5\ k\Omega$

Will your values change significantly if you take into account the 1.0 MΩ input resistance of the analog-to-digital converter?

Step 3: Checking Output over Temperature Range

With the circuit in a controlled-temperature environment, determine the output voltage over a range from 30°C to 110°C at 20° intervals. Use the graph in Figure 68.

Step 4: Troubleshooting the Circuit Board

For each of the following problems, state the probable cause or causes in each case (Refer to Figure 67):

1. V_{CE} is approximately 0.1 V and V_C is 3.8 V.
2. Collector of Q_1 remains at 15 V.
3. For each of the above conditions, if there is more than one possible fault, describe how you will go about isolating the problem.

Review

1. What is the basic purpose of the detector circuit board in the process control system?
2. In Step 2, does the transistor go into saturation and/or cutoff?
3. Calculate the output voltage at 40°C.
4. Calculate the output voltage at 60°C.

▶ **FIGURE 68**

Graph of thermistor resistance versus temperature.

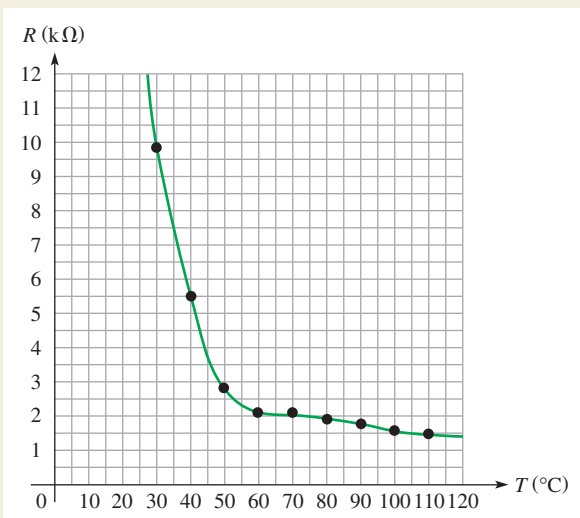

SUMMARY

- A bipolar junction transistor (BJT) consists of three regions: emitter, base, and collector. A terminal is connected to each of the three regions.
- The three regions of a BJT are separated by two *pn* junctions.
- The two types of bipolar transistor are the *npn* and the *pnp*.
- The term *bipolar* refers to two types of current: electron current and hole current.
- A field-effect transistor (FET) has three terminals: source, drain, and gate.
- A junction field-effect transistor (JFET) operates with a reverse-biased gate-to-source *pn* junction.

www.EngineeringBooksPdf.com

- JFET current between the drain and the source is through a channel whose width is controlled by the amount of reverse bias on the gate-source junction.
- The two types of JFETs are *n*-channel and *p*-channel.
- Metal-oxide semiconductor field-effect transistors (MOSFETs) differ from JFETs in that the gate of a MOSFET is insulated from the channel.
- The D-MOSFET has a physical channel between the drain and the source.
- The E-MOSFET has no physical channel.
- Transistor symbols are shown in Figure 69.

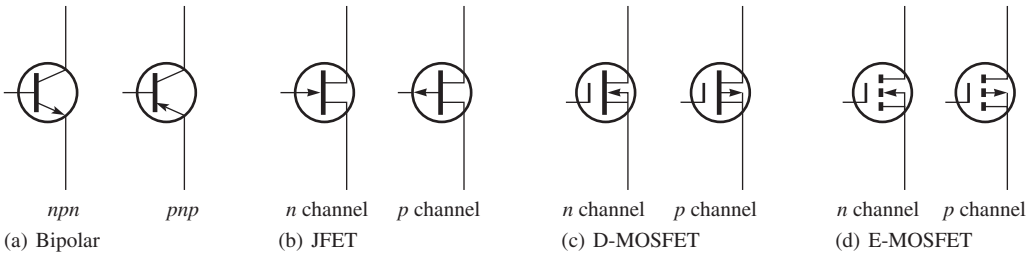

▲ **FIGURE 69**

Transistor symbols.

- Two main types of BJT amplifier configurations are the common-emitter (CE) and common-collector (CC). A third type is the common-base.
- Two main types of FET amplifier configurations are common-source (CS) and common-drain (CD). A third type is the common-gate.
- The class A amplifier conducts for the entire 360° of the input cycle and is normally used for low-power applications.
- The class B amplifier conducts for 180° of the input cycle and is normally used for high-power applications.
- Sinusoidal oscillators operate with positive feedback.
- The two conditions for positive feedback are the phase shift around the feedback loop must be 0° and the voltage gain around the feedback loop must be at least 1.
- For initial start-up in a feedback oscillator, the voltage gain around the feedback loop must be greater than 1.
- The feedback signal in a Colpitts oscillator is derived from a capacitive voltage divider in the *LC* circuit.
- The feedback signal in a Hartley oscillator is derived from an inductive voltage divider in the *LC* circuit.
- Crystal oscillators are the most stable type.

KEY TERMS

Amplification The process of producing a larger voltage, current, or power using a smaller input signal as a pattern.

Base One of the semiconductor regions in a bipolar junction transistor.

Bipolar Characterized by two *pn* junctions.

Bipolar junction transistor (BJT) A transistor constructed with three doped semiconductor regions separated by two *pn* junctions.

Class A amplifier An amplifier circuit that conducts for the entire input cycle and produces an output signal that is a replica of the input signal in terms of its waveshape.

www.EngineeringBooksPdf.com

Class B amplifier An amplifier circuit that conducts for half of the input cycle.

Collector One of the semiconductor regions in a BJT.

Common-collector (CC) A BJT amplifier configuration in which the collector is the common (grounded) terminal.

Common-drain (CD) A FET amplifier configuration in which the drain is the common terminal.

Common-emitter (CE) A BJT amplifier configuration in which the emitter is the common (grounded) terminal.

Common-source (CS) A FET amplifier configuration in which the source is the common terminal.

Current gain The ratio of output current to input current.

Cutoff The nonconducting state of a transistor.

Depletion mode The condition in a FET when the channel is depleted of majority carriers.

Drain One of the three terminals of a field-effect transistor.

Emitter One of the three semiconductor regions in a BJT.

Enhancement mode The condition of a MOSFET when the channel has an abundance of majority carriers.

Feedback The process of returning a portion of a circuit's output signal to the input in such a way as to create certain specified operating conditions.

Gate One of the three terminals of a FET.

JFET Junction field-effect transistor; a type of FET that operates with a reverse-biased junction to control current in a channel.

MOSFET Metal-oxide semiconductor field-effect transistor.

Oscillator A circuit that produces a repetitive waveform on its output with only the dc supply voltage as an input.

Power gain The ratio of output power to input power; the product of voltage gain and current gain.

Q-point The dc operating (bias) point of an amplifier.

Saturation The state of a transistor in which the output current is maximum and further increases of the input variable have no effect on the output.

Source One of the three terminals of a FET.

Transistor A semiconductor device that controls current between two terminals based on the current or voltage at a third terminal and is used for the amplification or switching of electrical signals.

Voltage gain The ratio of output voltage to input voltage.

FORMULAS

1	$I_E = I_C + I_B$	Bipolar transistor currents
2	$I_C = \alpha_{DC} I_E$	Relationship of collector and emitter currents
3	$I_C = \beta_{DC} I_B$	Relationship of collector and base currents
4	$V_C = V_{CC} - I_C R_C$	Collector voltage
5	$V_B = V_E + V_{BE}$	Base voltage
6	$R_{IN} \cong \beta_{DC} R_E$	Input resistance at base
7	$V_B \cong \left(\frac{R_2}{R_1 + R_2}\right) V_{CC}$	Approximate base voltage
8	$V_E = V_B - 0.7\text{ V}$	Emitter voltage
9	$\beta_{ac} = \frac{I_c}{I_b}$	ac beta
10	$A_v \cong \frac{R_C}{R_E}$	Voltage gain, class A CE amplifier

www.EngineeringBooksPdf.com

11	$A_v = \dfrac{R_C}{r_e + R_E}$	CE voltage gain (unbypassed)
12	$A_v = \dfrac{R_C}{r_e}$	CE voltage gain (bypassed)
13	$r_e \cong \dfrac{25\text{ mV}}{I_E}$	Internal emitter resistance
14	$R_{in} \cong \beta_{ac} r_e$	CE input resistance (unbypassed)
15	$R_{in(tot)} = R_1 \parallel R_2 \parallel R_{in}$	CE total input resistance
16	$A_i = \dfrac{I_c}{I_s}$	CE current gain
17	$A_p = A_v A_i$	CE power gain
18	$A_v = \dfrac{R_E}{r_e + R_E}$	CC voltage gain
19	$R_{in} \cong \beta_{ac} R_E$	CC input resistance
20	$R_{in(tot)} = R_1 \parallel R_2 \parallel R_{in}$	CC total input resistance
21	$A_i = \dfrac{I_e}{I_s}$	CC current gain
22	$A_p \cong A_i$	CC power gain
23	$I_{c(sat)} = \dfrac{V_{CEQ}}{R_L}$	Class B ac saturation current
24	$P_{out(max)} = 0.25 V_{CC} I_{c(sat)}$	Class B output power (maximum)
25	$P_{DC} = \dfrac{V_{CC} I_{c(sat)}}{\pi}$	Class B input power
26	$\text{eff}_{max} = 0.785$	Class B ideal maximum efficiency
27	$V_{CE(cutoff)} \cong V_{CC}$	V_{CE} at cutoff
28	$I_{C(sat)} \cong \dfrac{V_{CC}}{R_C}$	Collector saturation current
29	$I_{B(min)} = \dfrac{I_{C(sat)}}{\beta_{DC}}$	Minimum base current for saturation
30	$V_{GS} = -I_D R_S$	Self-bias voltage for *n*-channel JFET
31	$V_{GS} = +I_D R_S$	Self-bias voltage for *p*-channel JFET
32	$V_D = V_{DD} - I_D R_D$	Drain voltage
33	$V_{DS} = V_{DD} - I_D(R_D + R_S)$	Drain-to-source voltage
34	$V_{DS} = V_{DD} - I_{DSS} R_D$	Drain-to-source voltage D-MOSFET
35	$V_{GS} = \left(\dfrac{R_2}{R_1 + R_2}\right) V_{DD}$	Gate-to-source voltage E-MOSFET
36	$V_{DS} = V_{DD} - I_D R_D$	Drain-to-source voltage E-MOSFET
37	$g_m = \dfrac{I_d}{V_{gs}}$	FET transconductance
38	$A_v = g_m R_D$	CS voltage gain
39	$A_v = \dfrac{g_m R_S}{1 + g_m R_S}$	CD voltage gain
40	$A_{cl} = A_v B$	Closed loop gain for an oscillator
41	$f_r \cong \dfrac{1}{2\pi\sqrt{LC_T}}$	Colpitts frequency of oscillation
42	$C_T = \dfrac{C_1 C_2}{C_1 + C_2}$	Colpitts total feedback capacitance
43	$f_r \cong \dfrac{1}{2\pi\sqrt{L_T C_5}}$	Hartley frequency of oscillation

www.EngineeringBooksPdf.com

TRUE/FALSE QUIZ

Answers are at the end of the chapter.

1. In a bipolar transistor, if the base-emitter junction is reverse-biased, the transistor will be cutoff.
2. When a transistor is saturated, an increase in base current is not possible.
3. A load line is drawn between saturation and cutoff.
4. The power gain of a CC amplifier is the same as the current gain.
5. A class B amplifier is more efficient than a class A amplifier.
6. A JFET is always operated with the gate-source junction forward-biased.
7. The drain current when the gate-to-source voltage is zero is called I_{GSS}.
8. The transconductance of a FET is the ratio of ac drain current to gate-to-source voltage.
9. A CD amplifier has a current gain less than 1.
10. The input to a feedback oscillator is only the power supply voltage.

SELF-TEST

Answers are at the end of the chapter.

1. The *n*-type regions in an *npn* bipolar junction transistor are
   (a) collector and base **(b)** collector and emitter
   (c) base and emitter **(d)** collector, base, and emitter
2. The *n*-region in a *pnp* transistor is the
   (a) base **(b)** collector **(c)** emitter **(d)** case
3. For normal operation of an *npn* transistor, the base must be
   (a) disconnected **(b)** negative with respect to the emitter
   (c) positive with respect to the emitter **(d)** positive with respect to the collector
4. The three currents in a BJT are
   (a) forward, reverse, and neutral **(b)** drain, source, and gate
   (c) alpha, beta, and sigma **(d)** base, emitter, and collector
5. Beta (β) is the ratio of
   (a) collector current to emitter current **(b)** collector current to base current
   (c) emitter current to base current **(d)** output voltage to input voltage
6. Alpha (α) is the ratio of
   (a) collector current to emitter current **(b)** collector current to base current
   (c) emitter current to base current **(d)** output voltage to input voltage
7. If the beta of a certain transistor operating in the linear region is 30 and the base current is 1 mA, the collector current is
   (a) 0.033 mA **(b)** 1 mA **(c)** 30 mA **(d)** unknown
8. If the base current of a transistor operating in the linear region increases,
   (a) the collector current increases and the emitter current decreases
   (b) the collector current decreases and the emitter current decreases
   (c) the collector current increases and the emitter current does not change
   (d) the collector current increases and the emitter current increases
9. When an *n*-channel JFET is biased for conduction, the gate is
   (a) positive with respect to the source **(b)** negative with respect to the source
   (c) positive with respect to the drain **(d)** at the same voltage as the drain
10. When the gate-to-source voltage of an *n*-channel JFET is increased, the drain current
   (a) decreases **(b)** increases **(c)** stays constant **(d)** becomes zero

www.EngineeringBooksPdf.com

11. When a negative gate-to-source voltage is applied to an *n*-channel MOSFET, it operates in the
(a) cutoff state **(b)** saturated state
(c) enhancement mode **(d)** depletion mode

12. In a common-emitter (CE) amplifier, the capacitor from emitter to ground is called the
(a) coupling capacitor **(b)** decoupling capacitor
(c) bypass capacitor **(d)** tuning capacitor

13. If the capacitor from emitter to ground in a CE amplifier is removed, the voltage gain
(a) increases **(b)** decreases
(c) is not affected **(d)** becomes erratic

14. When the collector resistor in a CE amplifier is increased in value, the voltage gain
(a) increases **(b)** decreases
(c) is not affected **(d)** becomes erratic

15. The input resistance of a CE amplifier is affected by
(a) α and r_e **(b)** β and r_e
(c) R_c and r_e **(d)** R_e, r_e, and β

16. The output signal of a CE amplifier is always
(a) in phase with the input signal
(b) out of phase with the input signal
(c) larger than the input signal
(d) equal to the input signal

17. The output signal of a common-collector amplifier is always
(a) in phase with the input signal
(b) out of phase with the input signal
(c) larger than the input signal
(d) exactly equal to the input signal

18. The largest *theoretical* voltage gain obtainable with a CC amplifier is
(a) 100 **(b)** 10 **(c)** 1 **(d)** dependent of β

19. In a class A amplifier, the output signal is
(a) distorted **(b)** clipped
(c) the same shape as the input **(d)** smaller in amplitude than the input

20. A class A amplifier conducts for
(a) 90° of input cycle **(b)** 180° of input cycle
(c) 270° of input cycle **(d)** 360° of input cycle

21. A class B amplifier conducts for
(a) 90° of input cycle **(b)** 180° of input cycle
(c) 270° of input cycle **(d)** 360° of input cycle

22. Feedback oscillators operate on the principle of
(a) signal feedthrough **(b)** positive feedback
(c) negative feedback **(d)** attenuation

PROBLEMS

Answers to odd-numbered problems are at the end of the chapter.

BASIC PROBLEMS

SECTION 1 DC Operation of Bipolar Junction Transistors (BJTs)

1. What is the value of I_C for $I_E = 5.34$ mA and $I_B = 475\ \mu$A?

2. What is the α_{DC} when $I_C = 8.23$ mA and $I_E = 8.69$ mA?

www.EngineeringBooksPdf.com

3. A certain transistor has an $I_C = 25$ mA and an $I_B = 200\ \mu$A. Determine the β_{DC}.
4. In a certain transistor circuit, the base current is 2% of the 30 mA emitter current. Determine the collector current.
5. Find I_B, I_E, and I_C in Figure 70 given that $\alpha_{DC} = 0.98$ and $\beta_{DC} = 49$.

▶ FIGURE 70

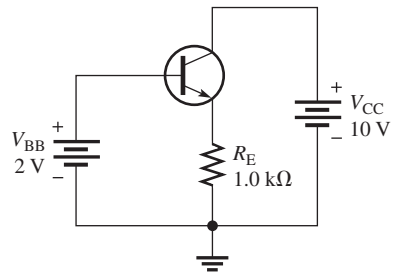

6. The transistor in Figure 70 is replaced with one having β_{DC} of 100. Assume $\alpha_{DC} = 0.98$. Determine I_B, I_E, and I_C.
7. Determine the emitter voltage with respect to ground in Figure 70.
8. Determine the terminal voltages of each transistor with respect to ground for each circuit in Figure 71. Also determine V_{CE}, V_{BE}, and V_{BC}. $\beta_{DC} = 50$.

▶ FIGURE 71

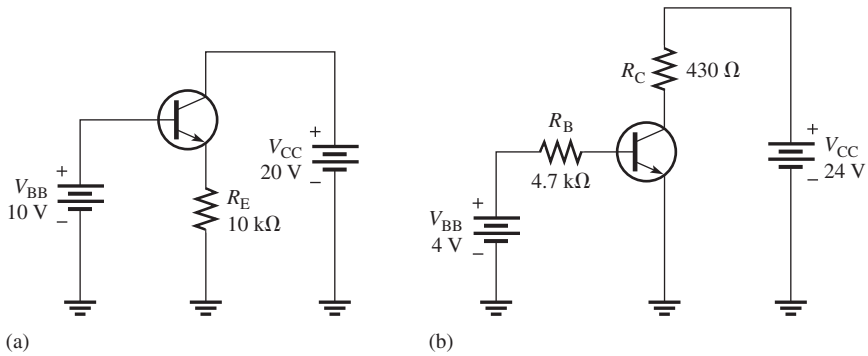

9. Determine I_B, I_C, and V_C in Figure 72.
10. For the circuit in Figure 73, find V_B, V_E, I_E, I_C, and V_C.
11. In Figure 73, what is V_{CE}? What are the Q-point coordinates?

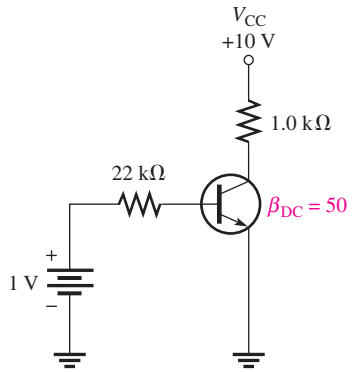

▲ FIGURE 72

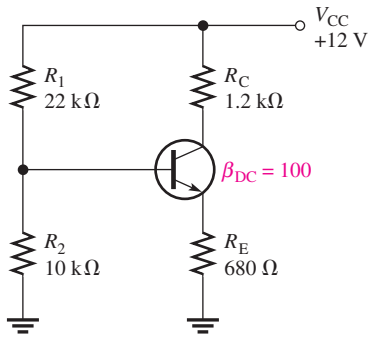

▲ FIGURE 73

www.EngineeringBooksPdf.com

SECTION 2 BJT Class A Amplifiers

12. A transistor amplifier has a voltage gain of 50. What is the output voltage when the input voltage is 100 mV?

13. To achieve an output of 10 V with an input of 300 mV, what voltage gain is required?

14. A 50 mV signal is applied to the base of a properly biased transistor with $R_E = 100\ \Omega$ (unbypassed) and $R_C = 500\ \Omega$. Determine the approximate signal voltage at the collector.

15. Determine the voltage gain for Figure 74.

16. Determine each of the dc voltages, V_B, V_C, and V_E, with respect to ground in Figure 74.

▶ FIGURE 74

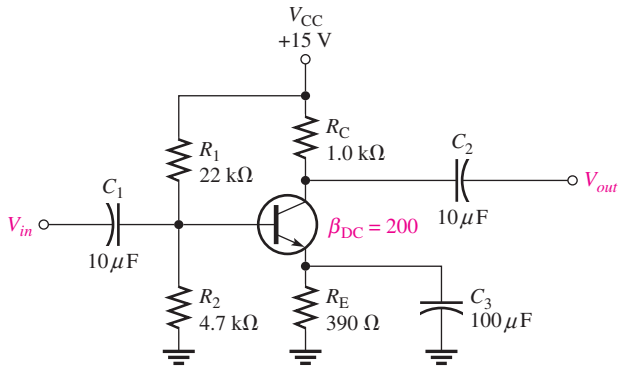

17. Determine the following dc values for the amplifier in Figure 75:

(a) V_B **(b)** V_E **(c)** I_E **(d)** I_C **(e)** V_C **(f)** V_{CE}

18. Determine the following ac values for the amplifier in Figure 75:

(a) R_{in} **(b)** $R_{in(tot)}$ **(c)** A_v **(d)** A_i **(e)** A_p

19. The amplifier in Figure 76 has a variable gain control, using a 100 Ω potentiometer for R_E with the wiper ac grounded. As the potentiometer is adjusted, more or less of R_E is bypassed to ground at the signal frequency, thus varying the gain. The total R_E remains constant to dc because the capacitor is an open to dc, keeping the bias fixed. Determine the maximum and minimum gains for this amplifier.

20. If a load resistance of 600 Ω is placed on the output of the amplifier in Figure 76, what is the maximum gain?

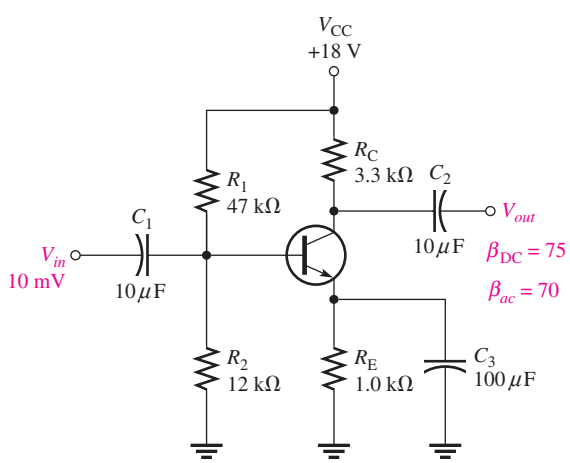

▲ FIGURE 75

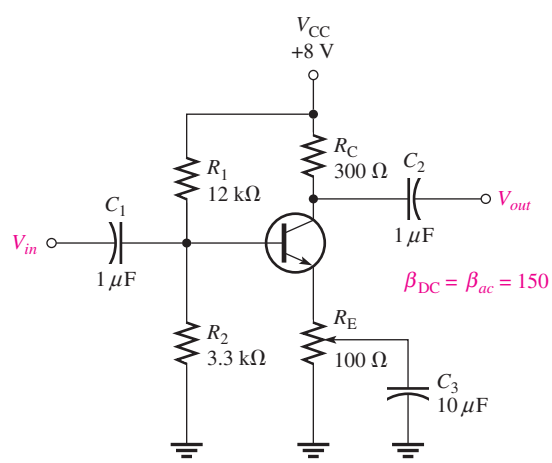

▲ FIGURE 76

www.EngineeringBooksPdf.com

21. Determine the voltage gain for the emitter-follower in Figure 77.

22. What is the total input resistance in Figure 77? What is the dc output voltage?

23. A load resistance is capacitively coupled to the emitter in Figure 77. In terms of signal operation, the load appears in parallel with R_E and reduces the effective emitter resistance. How does this affect the voltage gain?

▶ FIGURE 77

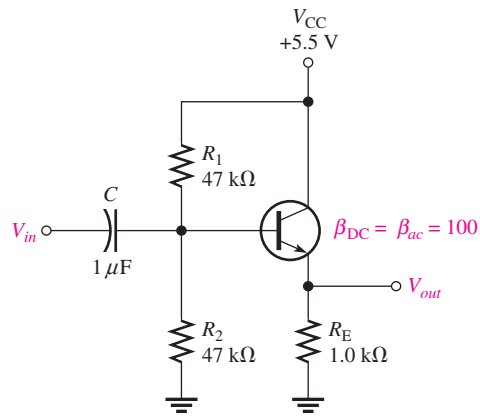

SECTION 3 BJT Class B Amplifiers

24. Determine the dc voltages at the bases and emitters of Q_1 and Q_2 in Figure 78. Also determine V_{CEQ} for each transistor.

25. Determine the maximum peak output voltage and peak load current for the circuit in Figure 78.

▶ FIGURE 78

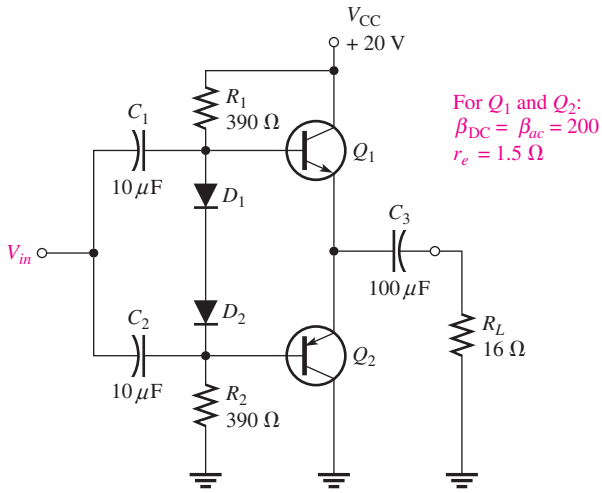

26. The efficiency of a certain class B push-pull amplifier is 0.71, and the dc input power is 16.3 W. What is the ac output power?

SECTION 4 The BJT as a Switch

27. Determine $I_{C(sat)}$ for the transistor in Figure 79. What is the value of I_B necessary to produce saturation? What minimum value of V_{IN} is necessary for saturation?

www.EngineeringBooksPdf.com

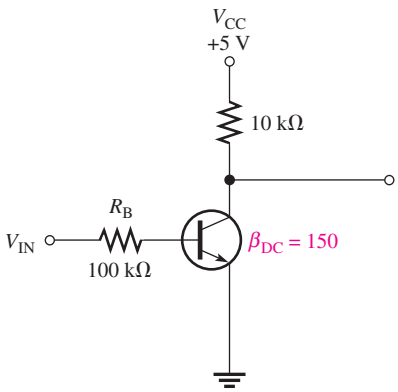

▲ FIGURE 79

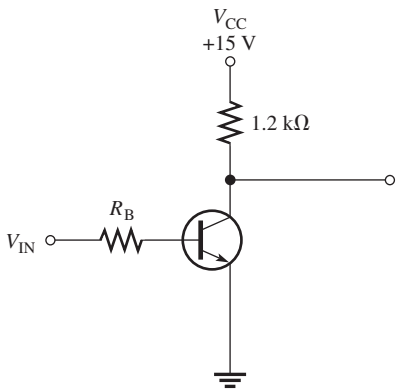

▲ FIGURE 80

28. The transistor in Figure 80 has a β_{DC} of 150. Determine the value of R_B required to ensure saturation when V_{IN} is 5 V. What must V_{IN} be to cut off the transistor?

SECTION 5 DC Operation of Field-Effect Transistors (FETs)

29. The V_{GS} of a *p*-channel JFET is increased from 1 V to 3 V.

(a) Does the depletion region narrow or widen?

(b) Does the resistance of the channel increase or decrease?

30. Why must the gate-to-source voltage of an *n*-channel JFET always be either 0 V or negative?

31. Draw the schematic symbols for *n*-channel and *p*-channel D-MOSFETs and E-MOSFETs. Label the terminals.

32. Explain why both types of MOSFETs have an extremely high input resistance at the gate.

33. In what mode is an *n*-channel D-MOSFET operating with a positive V_{GS}?

34. A certain E-MOSFET has a $V_{GS(th)} = 3$ V. What is the minimum V_{GS} for the device to turn on?

35. For each circuit in Figure 81, determine V_{DS} and V_{GS}.

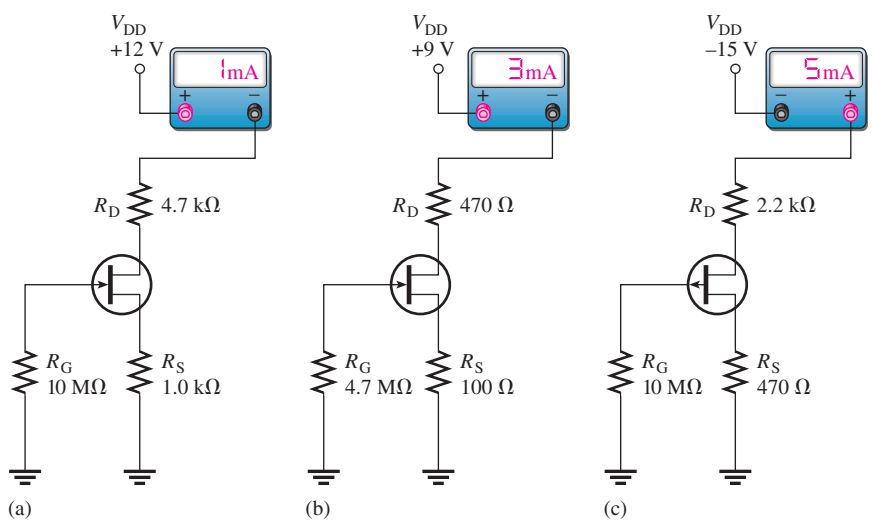

▲ FIGURE 81

www.EngineeringBooksPdf.com

36. Determine in which mode (depletion or enhancement) each D-MOSFET in Figure 82 is biased.

▶ FIGURE 82

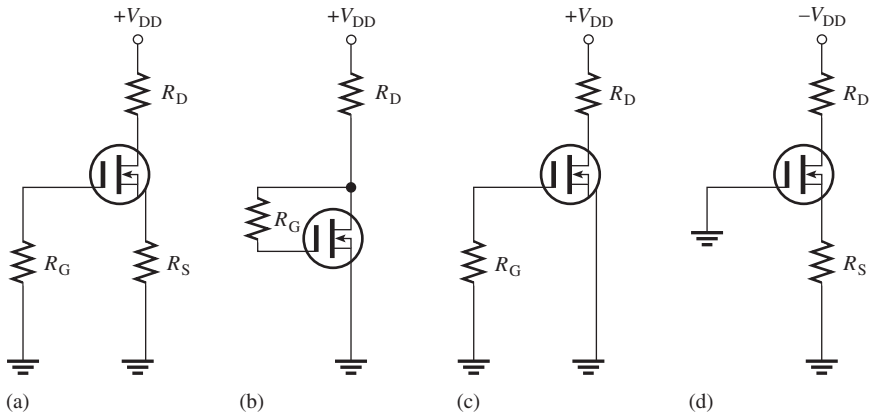

37. Each E-MOSFET in Figure 83 has a $V_{GS(th)}$ of +5 V or −5 V, depending on whether it is an *n*-channel or a *p*-channel device. Determine whether each MOSFET is *on* or *off*.

▶ FIGURE 83

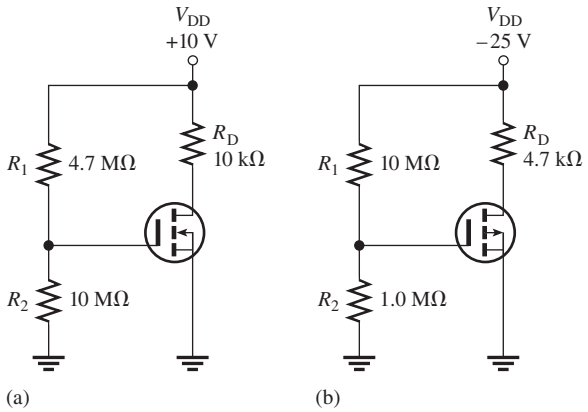

SECTION 6 FET Amplifiers

38. Determine the voltage gain of each CS amplifier in Figure 84.

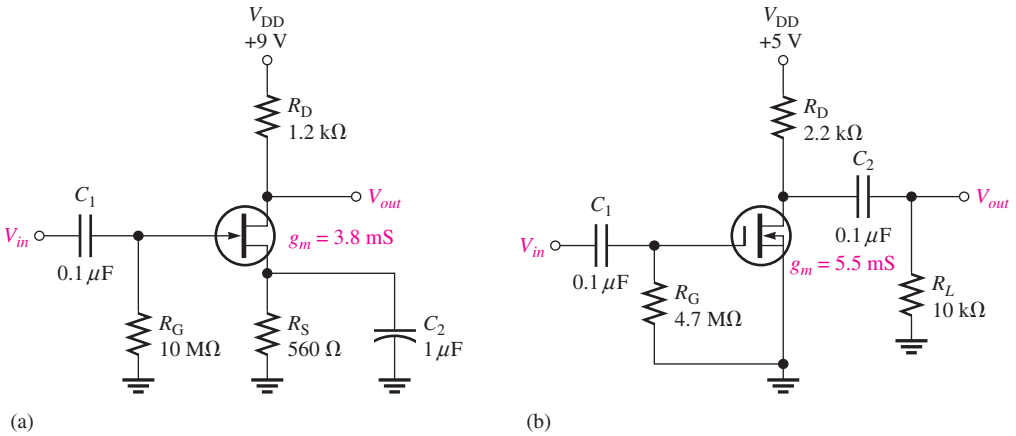

▲ FIGURE 84

www.EngineeringBooksPdf.com

39. Find the gain of each amplifier in Figure 85.

40. Determine the gain of each amplifier in Figure 85 when a 10 kΩ load is capacitively coupled from source to ground.

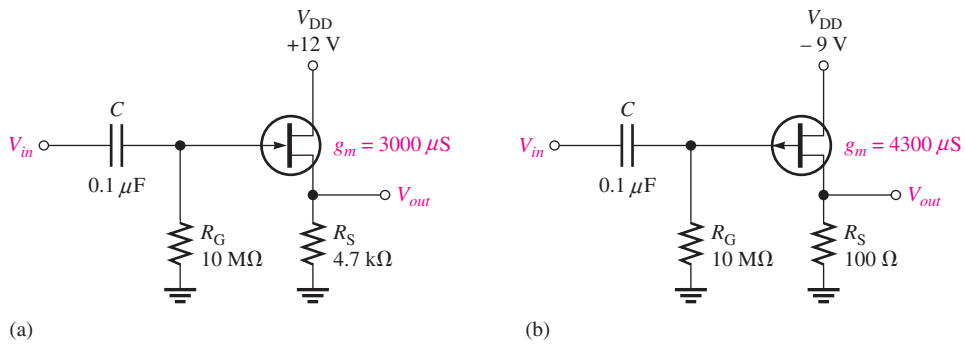

▲ FIGURE 85

SECTION 7 Feedback Oscillators

41. If the voltage gain of the amplifier portion of a feedback oscillator is 75, what must be the attenuation of the feedback circuit to sustain the oscillation?

42. Generally describe the change required to the oscillator of Problem 41 in order for oscillation to begin when the power is initially turned on.

43. Calculate the frequency of oscillation for each circuit in Figure 86 and identify each type of oscillator.

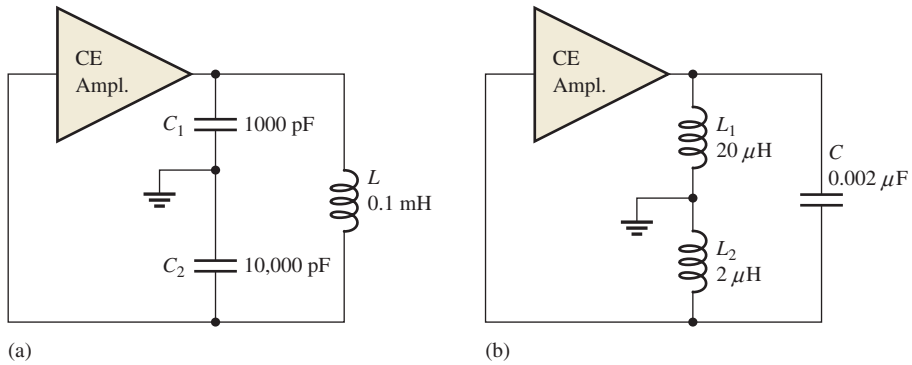

▲ FIGURE 86

SECTION 8 Troubleshooting

44. Assume that R_5 opens in Figure 62. Will Q_2 be in cutoff or in conduction? What dc voltage will you observe at the Q_2 collector?

45. Refer to Figure 62 and determine the general effect of each of the following failures:

(a) C_2 opens **(b)** C_3 opens **(c)** C_4 opens **(d)** C_2 shorts

(e) Base-collector junction of Q_1 opens **(f)** Base-emitter of Q_2 opens

www.EngineeringBooksPdf.com

46. What symptom(s) would indicate each of the following failures under signal conditions in Figure 87?

(a) Q_1 open from drain to source **(b)** R_3 open **(c)** C_2 shorted

(d) C_3 shorted **(e)** Q_2 open from drain to source

▶ FIGURE 87

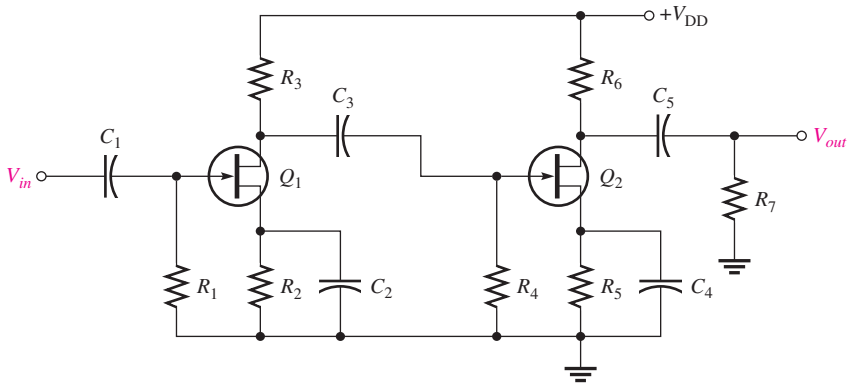

MULTISIM TROUBLESHOOTING PROBLEMS

47. Open file P17-47; files are found at www.pearsonhighered.com/floyd/. Test the circuit. If there is a fault, identify it.

48. Open file P17-48 and test the circuit. If there is a fault, identify it.

49. Determine if there is a fault in the circuit in file P17-49. If so, identify it.

50. Open file P17-50. Determine if the circuit is operating properly. If not, identify the fault.

51. Open file P17-51. Determine if the circuit is operating properly. If not, identify the fault.

52. Open file P17-52. Determine if the circuit is operating properly. If not, identify the fault.

53. Open file P17-53. Determine if the circuit is operating properly. If not, identify the fault.

ANSWERS

SECTION REVIEWS

SECTION 1 DC Operation of Bipolar Junction Transistors (BJTs)

1. The three regions of a BJT are emitter, base, and collector.

2. Forward-reverse bias means that the base-emitter junction is forward-biased and the base-collector junction is reverse-biased.

3. β_{DC} is direct current gain.

4. $I_C = \beta_{DC} I_B = 1$ mA

5. One source is required for voltage-divider bias.

6. $V_B = (4.7\ \text{k}\Omega/26.7\ \text{k}\Omega)(30\ \text{V}) = 5.28$ V

SECTION 2 BJT Class A Amplifiers

1. Amplification is the process of increasing the amplitude of an electrical signal.

2. The Q-point is the dc operating point.

3. $A_v \cong R_C/R_E = 21.4$

4. The bypass capacitor increases voltage gain.

5. The voltage gain of a CE amplifier is the ratio of collector resistance to total emitter resistance.

6. $A_p = A_v A_i = 4700$

7. An emitter-follower

8. $A_{v(max)} = 1$

www.EngineeringBooksPdf.com

SECTION 3 BJT Class B Amplifiers

1. The Q-point is at cutoff.
2. The barrier potential of the base-emitter junction causes crossover distortion.
3. $\text{Eff}_{max} = 78.5\%$
4. The push-pull configuration reproduces the input signal with greater efficiency.

SECTION 4 The BJT as a Switch

1. A switching transistor operates in saturation and cutoff.
2. I_C is maximum at saturation.
3. $I_C \cong 0$ A at cutoff.
4. Saturation occurs when the base-emitter junction and base-collector junction are forward-biased, and there is sufficient base current.
5. $V_{CE} = V_{CC}$ at cutoff.

SECTION 5 DC Operation of Field-Effect Transistors (FETs)

1. The three FET terminals are drain, source, and gate.
2. An *n*-channel JFET requires a negative V_{GS}.
3. I_D is controlled by V_{GS}.
4. $V_{GS} = -I_D R_S = -8$ V
5. Depletion/enhancement MOSFET; enhancement only MOSFET
6. Yes, there is I_{DS} when $V_{GS} = 0$ V.
7. No, there is no I_{DS} when $V_{GS} = 0$ V.
8. For $V_{GS} = 0$ V, $I_D = I_{DSS}$.
9. $V_{GS} > 2$ V

SECTION 6 FET Amplifiers

1. The A_v of a CS FET amplifier is determined by g_m and R_D.
2. A_v is halved because R_D is halved.

SECTION 7 Feedback Oscillators

1. An oscillator is a circuit that produces a repetitive output waveform with no input signal.
2. Positive feedback; it provides attenuation and phase shift.
3. Conditions for oscillation are zero phase shift and unity voltage gain around the closed loop.
4. Start-up conditions are loop gain at least 1 and zero phase shift.
5. Four types of feedback oscillators are *RC* phase-shift, Colpitts, Hartley, and crystal.
6. Colpitts uses two capacitors, center-tapped to ground in parallel with an inductor. Hartley uses two coils, center-tapped to ground in parallel with a capacitor.
7. A crystal oscillator has a greater frequency stability.

SECTION 8 Troubleshooting

1. If C_4 opens, the gain drops. The dc level would not be affected.
2. Q_2 would be biased in cutoff.
3. The collector voltage of Q_1 and the base voltage of Q_2 would change. A change in V_{B2} will also cause V_{E2}, I_{E2}, and V_{C2} to change.
4. **(a)** The ac signal will disappear because it is shorted to ground through the base-emitter junction and C_4.

   (b) Yes, the dc level will decrease.
5. Check for excess input signal voltage.
6. Open bypass capacitor C_2 or C_4 will cause a loss of gain.

www.EngineeringBooksPdf.com

RELATED PROBLEMS FOR EXAMPLES

1 $V_B = 4.69$ V; $V_E = 3.99$ V; $V_C = 11.0$ V; $V_{CE} = 7.01$ V; $I_B = 20\ \mu$A; $I_E = 3.99$ mA; $I_C \cong 3.99$ mA

2 Along the horizontal axis

3 An 850 mV peak sine wave riding on a 6.16 V dc level

4 235

5 $A_v = 4.64$

6 5.89

7 7.5 V; 469 mA

8 12.5 W

9 78.4 μA

10 $V_{DS} = 2$ V; $V_{GS} = -3.12$ V

11 6.8 V

12 2.13 mA

13 1.68 V peak-to-peak signal riding on a dc level of 8.4 V

14 $R_{IN} = 7.5$ MΩ

TRUE/FALSE QUIZ

1. T **2.** F **3.** T **4.** T **5.** T **6.** F **7.** F **8.** T **9.** F **10.** T

SELF-TEST

1. (b) **2.** (a) **3.** (c) **4.** (d) **5.** (b) **6.** (a) **7.** (c) **8.** (d)
9. (b) **10.** (a) **11.** (d) **12.** (c) **13.** (b) **14.** (a) **15.** (d) **16.** (b)
17. (a) **18.** (c) **19.** (c) **20.** (d) **21.** (b) **22.** (b)

PROBLEMS – ODD-NUMBERED ANSWERS

1. 4.87 mA

3. 125

5. $I_B = 25.9\ \mu$A; $I_E = 1.3$ mA; $I_C = 1.27$ mA

7. 1.3 V

9. $I_B = 13.6\ \mu$A; $I_C = 680\ \mu$A; $V_C = 9.32$ V

11. $V_{CE} = 3.57$ V; Q-point: $I_C = 4.48$ mA, $V_{CE} = 3.57$ V

13. 33.3

15. 199

17. **(a)** 3.25 V **(b)** 2.55 V **(c)** 2.55 mA
(d) $\cong$ 2.55 mA **(e)** 9.59 V **(f)** 7.04 V

19. $A_{v(max)} = 92.3$; $A_{v(min)} = 2.91$

21. 0.988

23. A_v is reduced slightly (approximately 1%)

25. 10 V; 625 mA

27. 0.5 mA; 3.33 μA; 1.03 V

29. **(a)** Narrows **(b)** Increases

31. See Figure P–29.

www.EngineeringBooksPdf.com

▶ FIGURE P–29

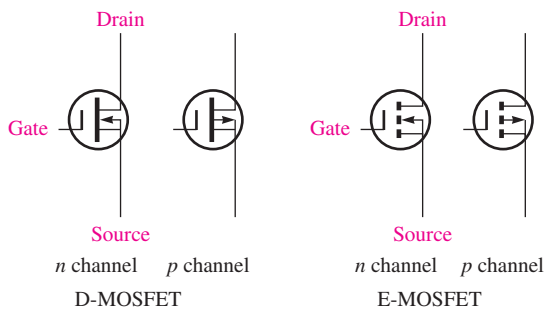

33. Enhancement mode

35. **(a)** $V_{DS} = 6.3$ V; $V_{GS} = -1$ V

(b) $V_{DS} = 7.29$ V; $V_{GS} = -0.3$ V

(c) $V_{DS} = -1.65$ V; $V_{GS} = 2.35$ V

37. **(a)** On **(b)** Off

39. **(a)** 0.934 **(b)** 0.301

41. 0.0133

43. **(a)** 528 kHz, Colpitts **(b)** 759 kHz, Hartley

45. **(a)** If the bypass capacitor, C_2, opens, the voltage gain of the first stage and thus the overall gain decreases. The dc voltages and the currents are not affected.

(b) If the coupling capacitor, C_3, opens, the signal will not reach the second stage so $V_{out} = 0$ V. The voltage gain of the first stage increases due to reduced loading. The dc voltages and currents are not affected.

(c) If the bypass capacitor, C_4, opens, the voltage gain of the second stage and thus the overall gain decreases. The dc voltages and currents are not affected.

(d) If C_2 shorts, the gain of the first stage does not change significantly (it is already an ac short), but the dc voltage of the first stage will change as R_4 is shorted out.

(e) If the BC junction of Q_1 opens, the signal will not pass through the first stage. The dc voltages at the base, emitter, and collector of Q_1 will change. The dc voltages and currents in the second stage are not affected.

(f) If the BE junction of Q_2 opens, the signal will not pass through the second stage. The dc voltages at the base, emitter, and collector of Q_2 will change. The dc voltages and currents in the first stage are not affected.

47. Base-collector junction is open.

49. Drain and source are shorted.

51. No fault

53. C_1 is open.

PHOTO CREDITS FOR REOCCURRING IMAGES

CD Icon: Stockbyte/Getty Images; **Computer Chips:** Photodisc/Thinkstock; **Computer:** Jeff Maloney/Photodisc/Getty Images; **Fiber Optic:** discpicture/Shutterstock.

www.EngineeringBooksPdf.com

This page intentionally left blank

www.EngineeringBooksPdf.com

The Operational Amplifier

CHAPTER OUTLINE

1 Introduction to the Operational Amplifier
2 The Differential Amplifier
3 Op-Amp Parameters
4 Negative Feedback
5 Op-Amp Configurations with Negative Feedback
6 Op-Amp Resistances
7 Troubleshooting
Application Assignment: Putting Your Knowledge to Work

CHAPTER OBJECTIVES

- Discuss the basic op-amp
- Explain the basic operation of a differential amplifier
- Discuss several op-amp parameters
- Explain negative feedback in op-amp circuits
- Analyze op-amp configurations
- Describe the effects of negative feedback on the basic op-amp configurations
- Troubleshoot op-amp circuits

KEY TERMS

- Operational amplifier
- Differential amplifier
- Single-ended mode
- Differential mode
- Common mode
- Common-mode rejection ratio (CMRR)
- Open-loop voltage gain
- Negative feedback
- Closed-loop voltage gain
- Noninverting amplifier
- Voltage-follower
- Inverting amplifier

APPLICATION ASSIGNMENT PREVIEW

The subject of the application assignment in this chapter is a spectrophotometer system that is used to analyze chemical solutions to determine their contents. The system combines electronic, mechanical, and optical technology to accomplish its task. The electronics portion uses a photocell and an op-amp to detect the wavelength of light passing through the solution and to amplify the resulting signal prior to sending it to a processor for analysis and display. After studying this chapter, you should be able to complete the application assignment.

VISIT THE COMPANION WEBSITE

Study aids for this chapter are available at http://www.pearsonhighered.com/floyd/

INTRODUCTION

The diode and transistor are individually packaged devices and are connected in a circuit with other individual devices to form a functional unit. Individually packaged devices are referred to as *discrete components.*

In this chapter, linear integrated circuits (ICs), in which many transistors, diodes, resistors, and capacitors are fabricated on a single silicon chip and packaged in a single case to form an operational amplifier (op-amp) are introduced. The manufacturing process for ICs is complex and beyond the scope of this coverage.

In our study of operational amplifiers, we will treat the entire circuit as a single device; however, we will look at the input and output stages to understand how they affect circuit operation. The input stage is a differential amplifier, and the output stage is a push-pull amplifier. A basic understanding of these circuits will help you understand how op-amps are used, but the details of the internal circuits are not our concern here.

Streeter Photography/Alamy

From Chapter 18 of *Electronics Fundamentals: Circuits, Devices, and Applications*, Eighth Edition, Thomas L. Floyd, David M. Buchla. Copyright © 2010 by Pearson Education, Inc. Published by Pearson Prentice Hall. All rights reserved.

www.EngineeringBooksPdf.com

1 INTRODUCTION TO THE OPERATIONAL AMPLIFIER

Early operational amplifiers (op-amps) were used primarily to perform mathematical operations such as addition, subtraction, integration, and differentiation—hence the term *operational.* These early devices were constructed with vacuum tubes and worked with high voltages. Today's op-amps are linear integrated circuits (ICs) that use relatively low dc supply voltages and are reliable and inexpensive.

After completing this section, you should be able to

- **Discuss the basic op-amp**
  - Recognize an op-amp symbol
  - Identify terminals on op-amp packages
  - Describe an ideal op-amp
  - Describe a practical op-amp

Symbol and Terminals

The standard **operational amplifier** symbol is shown in Figure 1(a). It has two input terminals, the inverting (−) input and the noninverting (+) input, and one output terminal. The typical op-amp requires two dc supply voltages, one positive and the other negative, as shown in Figure 1(b). Usually these dc voltage terminals are left off the schematic symbol for simplicity, but they are always understood to be there. Typical IC packages are shown in Figure 1(c).

▶ FIGURE 1

Op-amp symbols and packages.

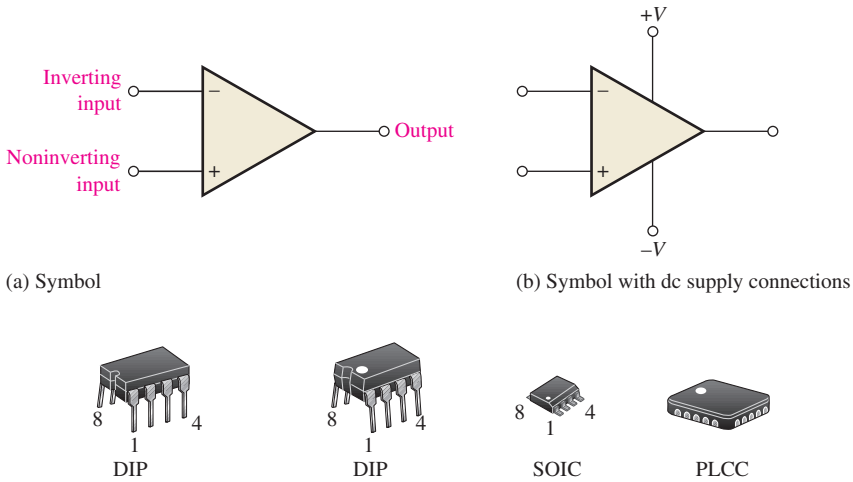

(a) Symbol

(b) Symbol with dc supply connections

(c) Typical packages. Looking from the top, pin 1 always is to the left of the notch or dot on the DIP and SOIC packages. The dot indicates pin 1 on the plastic-leaded chip carrier (PLCC) package.

The Ideal Op-Amp

To illustrate what an op-amp is, let's consider its ideal characteristics. A practical op-amp, of course, falls short of these ideal standards, but it is much easier to understand and analyze the device from an ideal point of view.

This icon indicates selected websites for further information on topics in this section. See the Companion Website provided with this text.

www.EngineeringBooksPdf.com

The ideal op-amp has *infinite voltage gain* and an *infinite input resistance* (open), so that it does not load the driving source. (Input resistance is sometimes called *input impedance.*) Also, it has a *zero output resistance.* (Output resistance is sometimes called *output impedance.*) These characteristics are illustrated in Figure 2. The input voltage, V_{in}, appears between the two input terminals, and the output voltage is A_vV_{in}, as indicated by the symbol for internal voltage source. The concept of infinite input resistance is a particularly valuable analysis tool for the various op-amp configurations, which will be discussed in Section 5.

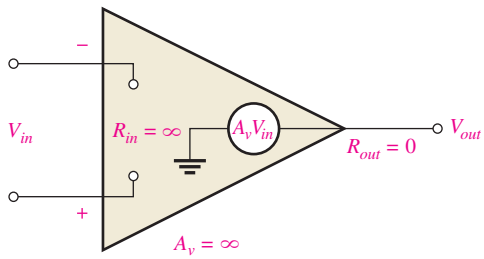

◀ FIGURE 2

Ideal op-amp representation.

The Practical Op-Amp

Although modern IC op-amps approach parameter values that can be treated as ideal in many cases, the ideal device can never be made. Any device has limitations, and the IC op-amp is no exception. Op-amps have both voltage and current limitations. Peak-to-peak output voltage, for example, is usually limited to slightly less than the two supply voltages. Output current is also limited by internal restrictions such as power dissipation and component ratings.

Characteristics of a practical op-amp are *high voltage gain, high input resistance,* and *low output resistance,* as illustrated in Figure 3.

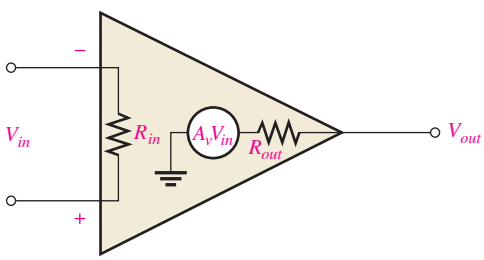

◀ FIGURE 3

Practical op-amp representation.

Internal Block Diagram of an Op-Amp

A typical op-amp is made up of three types of amplifier circuits: a *differential amplifier,* a *voltage amplifier,* and a *push-pull amplifier,* as shown in Figure 4.

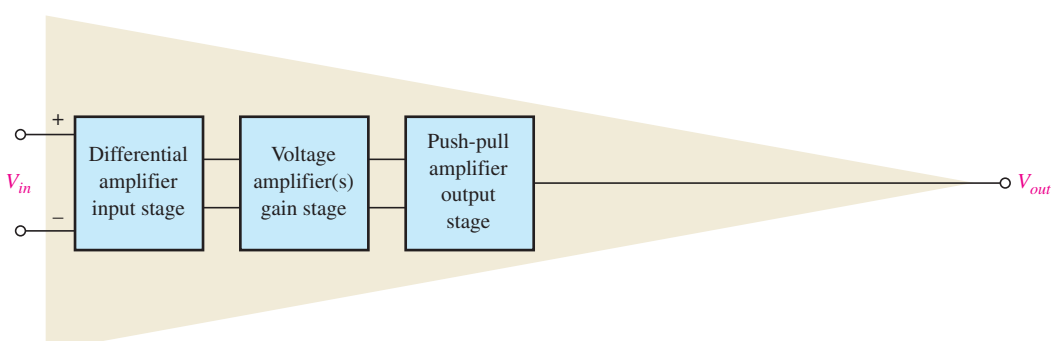

▲ FIGURE 4

Basic internal arrangement of an op-amp.

www.EngineeringBooksPdf.com

A differential amplifier is the input stage for the op-amp; it has two inputs and provides amplification of the difference voltage between the two inputs. The voltage amplifier is usually a class A amplifier that provides additional op-amp gain. Some op-amps may have more than one voltage amplifier stage. A push-pull class B amplifier is used for the output stage.

SECTION 1 CHECKUP
Answers are at the end of the chapter.

1. Sketch the symbol for an op-amp.
2. Describe the ideal op-amp.
3. Describe some of the characteristics of a practical op-amp.
4. List the amplifier stages in a typical op-amp.

2 THE DIFFERENTIAL AMPLIFIER

The op-amp, in its basic form, uses differential amplifiers for its input stage. Because the differential amplifier (diff-amp) is fundamental in the op-amp's internal operation, it is useful to have a basic understanding of this type of circuit.

After completing this section, you should be able to

- **Explain the basic operation of a differential amplifier**
  - Describe single-ended input operation
  - Describe differential input operation
  - Describe common-mode input operation
  - Define *common-mode rejection ratio* (CMRR)
  - Describe how diff-amps are used within an op-amp

A **differential amplifier** is an amplifier that produces an output proportional to the difference of two inputs. A basic differential amplifier circuit and its symbol are shown in Figure 5. The diff-amp stages that make up part of the op-amp provide high voltage gain and common-mode rejection (defined later in this section). Notice that the differential amplifier has two outputs where the op-amp has only one output. Also, there is a positive and a negative supply voltage ($+V_{CC}$ and $-V_{EE}$). The differential amplifiers in this text use BJTs. FETs can be used where very high input resistance is required.

FIGURE 5
Basic differential amplifier.

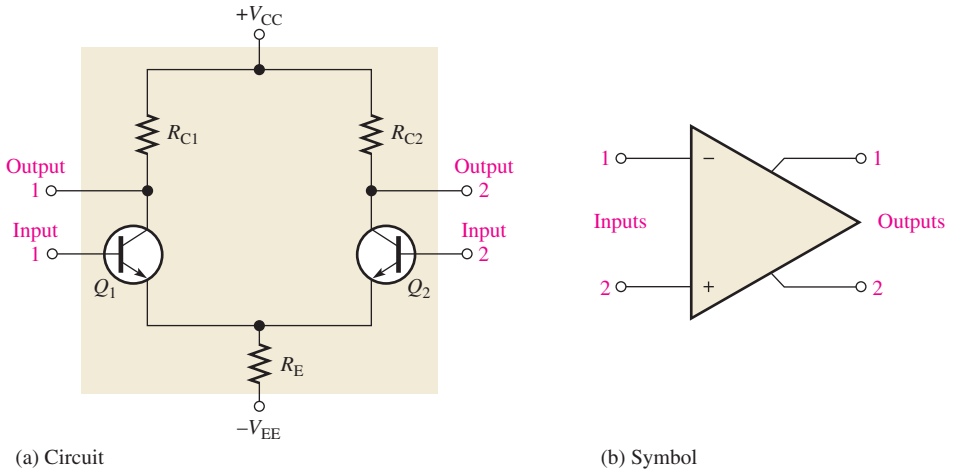

(a) Circuit (b) Symbol

www.EngineeringBooksPdf.com

Basic Operation

Although an op-amp typically has more than one diff-amp stage, we will use a single diff-amp to illustrate the basic operation. The following discussion is in relation to Figure 6 and consists of a basic dc analysis of the diff-amp's operation.

First, when both inputs are grounded (0 V), the emitters are at −0.7 V, as indicated in Figure 6(a). It is assumed that the transistors are identically matched by careful process control during manufacturing so that their dc emitter currents are the same when there is no input signal. Thus,

$$I_{E1} = I_{E2}$$

Since both emitter currents combine through R_E,

$$I_{E1} = I_{E2} = \frac{I_{R_E}}{2}$$

where

$$I_{R_E} = \frac{V_E - V_{EE}}{R_E}$$

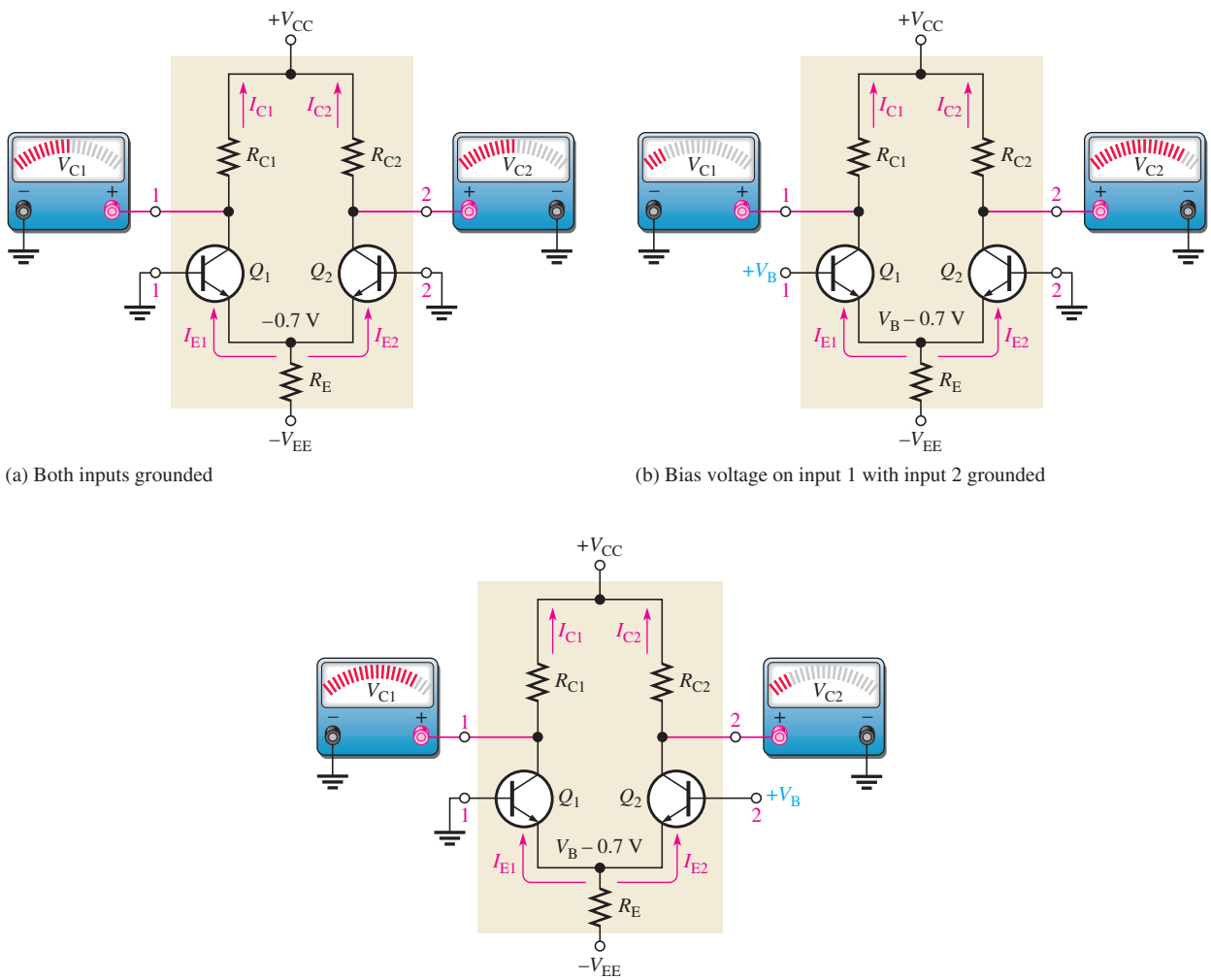

(a) Both inputs grounded

(b) Bias voltage on input 1 with input 2 grounded

(c) Bias voltage on input 2 with input 1 grounded

▲ **FIGURE 6**

Basic operation of a differential amplifier (ground is 0 V) showing relative changes in the collector voltages.

www.EngineeringBooksPdf.com

Based on the approximation that $I_C \cong I_E$, it can be stated that

$$I_{C1} = I_{C2} \cong \frac{I_{R_E}}{2}$$

Since both collector currents and both collector resistors are equal (when the input voltage is zero),

$$V_{C1} = V_{C2} = V_{CC} - I_{C1}R_{C1}$$

This condition is illustrated in Figure 6(a).

Next, input 2 remains grounded and a positive bias voltage is applied to input 1, as shown in Figure 6(b). The positive voltage on the base of Q_1 increases I_{C1} and raises the emitter voltage. This action reduces the forward bias (V_{BE}) of Q_2 because its base is held at 0 V (ground), thus causing I_{C2} to decrease. The net result is that the increase in I_{C1} causes a decrease in V_{C1}, and the decrease in I_{C2} causes an increase in V_{C2}, as shown.

Finally, input 1 is grounded and a positive bias voltage is applied to input 2, as shown in Figure 6(c). The positive bias voltage causes Q_2 to conduct more, thus increasing I_{C2}. Also, the emitter voltage is raised. This reduces the forward bias of Q_1 because its base is held at ground and causes I_{C1} to decrease. The result is that the increase in I_{C2} produces a decrease in V_{C2}, and the decrease in I_{C1} causes V_{C1} to increase as shown.

Modes of Signal Operation

Single-Ended Input When a diff-amp is operated in the **single-ended mode**, one input is grounded and the signal voltage is applied only to the other input, as shown in Figure 7. In the case where the signal voltage is applied to input 1, as in part (a), an inverted, amplified signal voltage appears at output 1 as shown. Also, a signal voltage appears in

▶ **FIGURE 7**

Single-ended input operation of a differential amplifier.

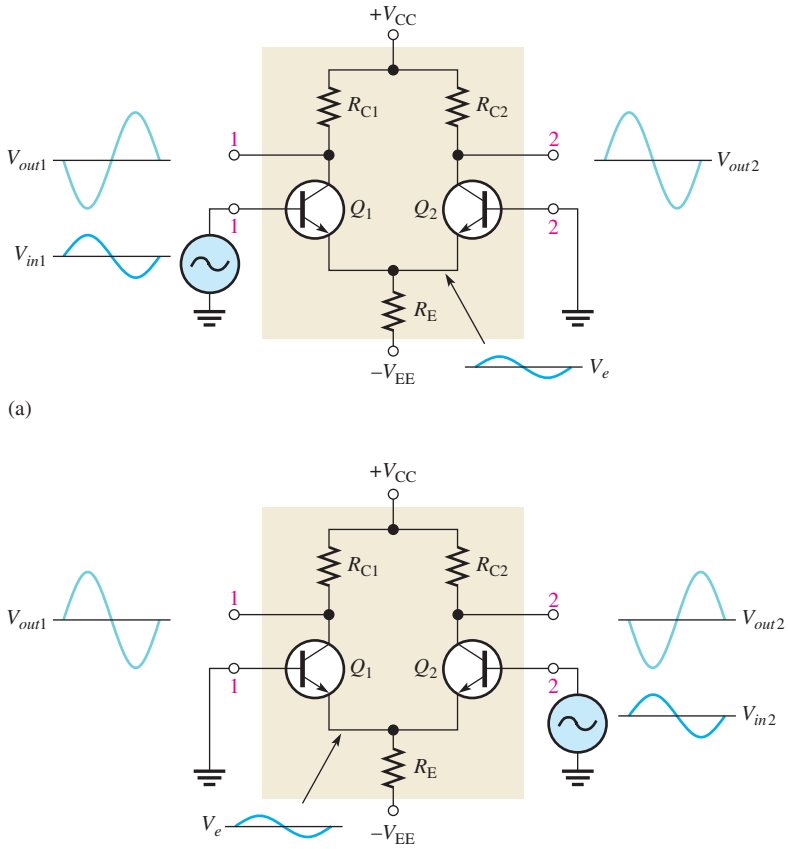

www.EngineeringBooksPdf.com

phase at the emitter of Q_1. Since the emitters of Q_1 and Q_2 are common, this emitter signal becomes an input to Q_2, which functions as a common-base amplifier. The signal is amplified by Q_2 and appears, noninverted, at output 2. This action is illustrated in part (a).

In the case where the signal is applied to input 2 with input 1 grounded, as in Figure 7(b), the emitter signal becomes an input to Q_1, and an inverted, amplified signal voltage appears at output 2. In this situation, Q_1 acts as a common-base amplifier, and a noninverted, amplified signal appears at output 1.

Differential Input In the **differential mode**, two signals of opposite polarity (out of phase) are applied to the inputs, as shown in Figure 8(a). This type of operation is also referred to as *double-ended.* Each input affects the outputs, as you will see in the following discussion.

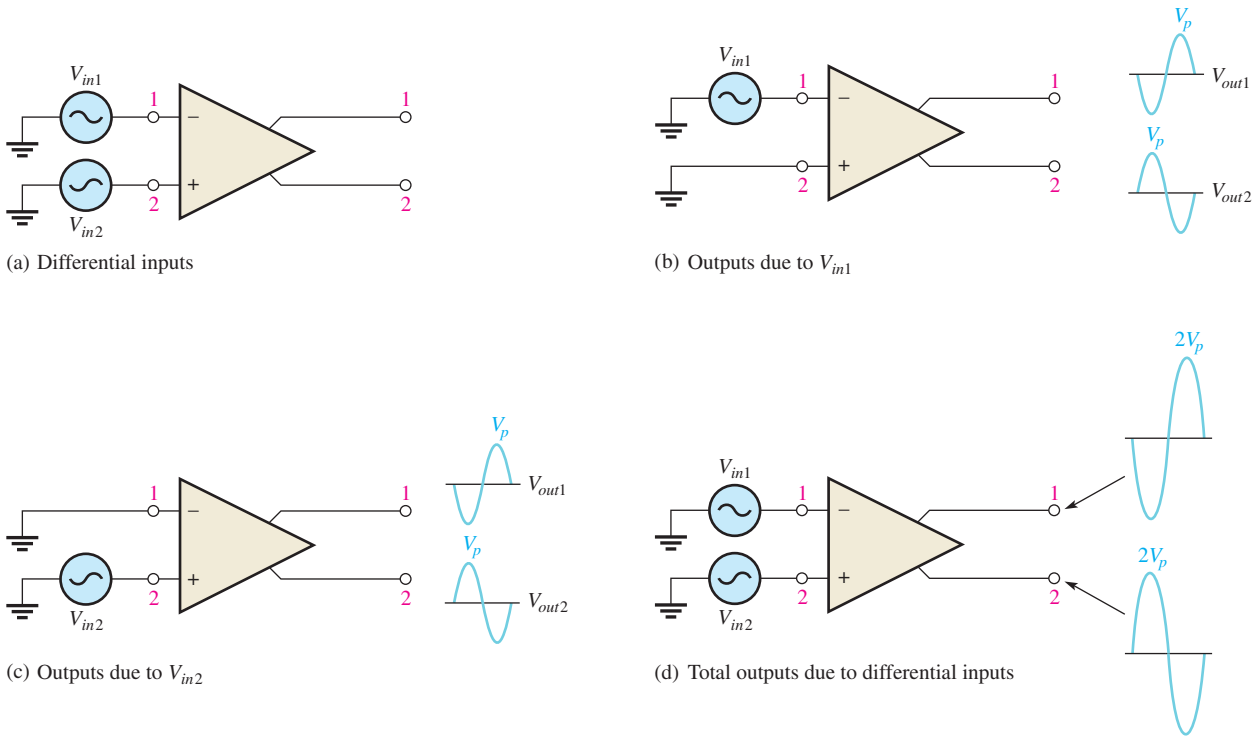

(a) Differential inputs

(b) Outputs due to V_{in1}

(c) Outputs due to V_{in2}

(d) Total outputs due to differential inputs

▲ **FIGURE 8**

Differential operation of a differential amplifier.

Figure 8 (b) shows the output signals due to the signal on input 1 acting alone as a single-ended input. Figure 8(c) shows the output signals due to the signal on input 2 acting alone as a single-ended input. In parts (b) and (c), notice that the signals on output 1 are of the same polarity. The same is also true for output 2. By superimposing both output 1 signals and both output 2 signals, you get the total differential operation, as pictured in Figure 8(d).

Common-Mode Input One of the most important aspects of the operation of a diff-amp can be seen by considering the **common-mode** condition. Any ac or dc voltage that is identical on both inputs is a common-mode signal. Consider the two signals shown in Figure 9(a), which have the same amplitude, frequency, and phase relationship. Again, by considering each input as acting alone, you can understand the basic operation.

Figure 9 (b) shows the output signals due to the signal only on input 1, and part (c) shows the output signals due to the signal on only input 2. Notice in parts (b) and (c) that the signals on output 1 are of the opposite polarity, and so are those on output 2. When the input signals are applied to both inputs, the outputs are superimposed and they cancel, resulting in a near zero output voltage, as shown in Figure 9(d).

www.EngineeringBooksPdf.com

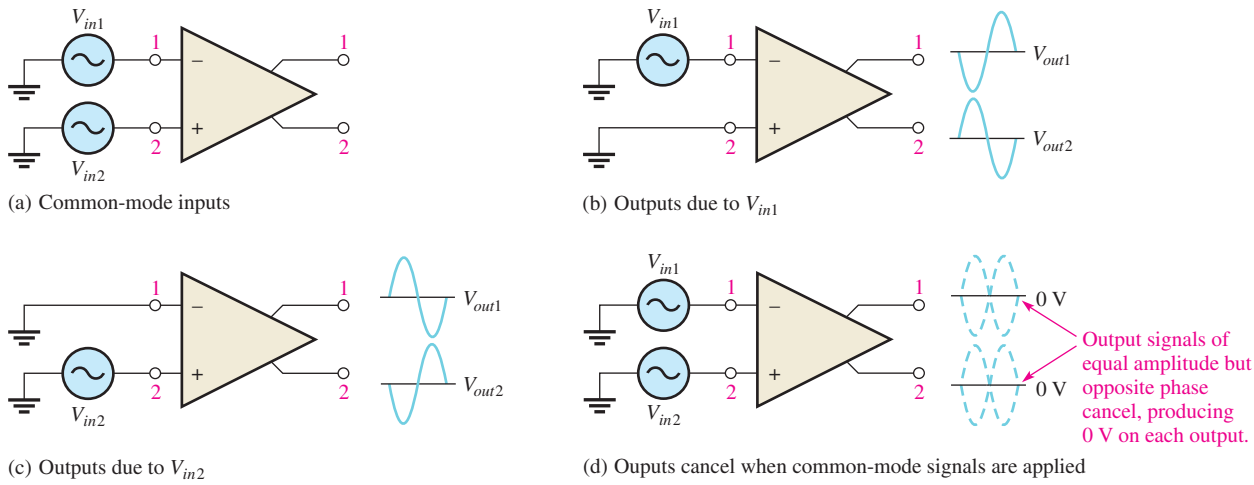

(a) Common-mode inputs

(b) Outputs due to V_{in1}

(c) Outputs due to V_{in2}

(d) Ouputs cancel when common-mode signals are applied

▲ **FIGURE 9**

Common-mode operation of a differential amplifier.

This action is called *common-mode rejection.* Its importance can be seen in the situation where an unwanted signal appears commonly on both diff-amp inputs. Common-mode rejection means that this unwanted signal will not appear on the outputs to distort the desired signal. **Common-mode signals** (noise) generally are the result of the pick-up of radiated energy on the input lines, from adjacent lines, or the 60 Hz power line, or other sources. Differential amplifiers are very efficient at rejecting low-frequency common-mode signals like power line interference, but they usually cannot reject very high interfering signals such as those caused by high-frequency switching noise. In cases where high-frequency noise is present, shielding the signal lines may be necessary.

Common-Mode Rejection Ratio, CMRR

Desired signals appear on only one input or with opposite polarities on both input lines. These desired signals are amplified and appear on the outputs as previously discussed. Unwanted signals (noise) appearing with the same polarity on both input lines are essentially canceled by the diff-amp and do not appear on the outputs. The measure of an amplifier's ability to reject common-mode signals is a parameter called the **common-mode rejection ratio (CMRR)**.

Ideally, a diff-amp provides a very high gain for desired signals (single-ended or differential), and zero gain for common-mode signals. Practical diff-amps, however, do exhibit a very small common-mode gain (usually much less than 1), while providing a high differential voltage gain (usually several thousand). The higher the differential gain with respect to the common-mode gain, the better the performance of the diff-amp in terms of rejection of common-mode signals. This suggests that a good measure of the diff-amp's performance in rejecting unwanted common-mode signals is the ratio of the differential gain, $A_{v(d)}$, to the common-mode gain, A_{cm}. This ratio is the common-mode rejection ratio, CMRR.

Equation 1

$$\mathbf{CMRR} = \frac{A_{v(d)}}{A_{cm}}$$

The higher the CMRR, the better. A very high value of CMRR means that the differential gain $A_{v(d)}$ is high and the common-mode gain A_{cm} is low.

The CMRR is often expressed in decibels (dB) as

Equation 2

$$\mathbf{CMRR} = 20\log\left(\frac{A_{v(d)}}{A_{cm}}\right)$$

www.EngineeringBooksPdf.com

EXAMPLE 1

A certain diff-amp has a differential voltage gain of 2000 and a common-mode gain of 0.2. Determine the CMRR and express it in decibels.

Solution $A_{v(d)} = 2000$ and $A_{cm} = 0.2$. Therefore,

$$\text{CMRR} = \frac{A_{v(d)}}{A_{cm}} = \frac{2000}{0.2} = \mathbf{10{,}000}$$

Expressed in decibels,

$$\text{CMRR} = 20\log(10{,}000) = \mathbf{80\ dB}$$

*Related Problem** Determine the CMRR and express it in dB for an amplifier with a differential voltage gain of 8500 and a common-mode gain of 0.25.

*Answers are at the end of the chapter.

A CMRR of 10,000, for example, means that the desired input signal (differential) is amplified 10,000 times more than the unwanted noise (common-mode). So, as an example, if the amplitudes of the differential input signal and the common-mode noise are equal, the desired signal will appear on the output 10,000 times greater in amplitude than the noise. Thus, the noise or interference has been essentially eliminated.

Example 2 illustrates further the idea of common-mode rejection and the general signal operation of the diff-amp.

EXAMPLE 2

The diff-amp shown in Figure 10 has a differential voltage gain of 2500 and a CMRR of 30,000. In part (a), a single-ended input signal of 500 μV rms is applied. At the same time a 100 mV, 60 Hz common-mode interference signal appears on both inputs as a result of radiated pick-up from the ac power system. In part (b), differential input signals of 500 μV rms each are applied to the inputs. The common-mode interference is the same as in part (a).

(a) Determine the common-mode gain.

(b) Express the CMRR in dB.

(c) Determine the rms output signal for parts (a) and (b).

(d) Determine the rms interference voltage on the output.

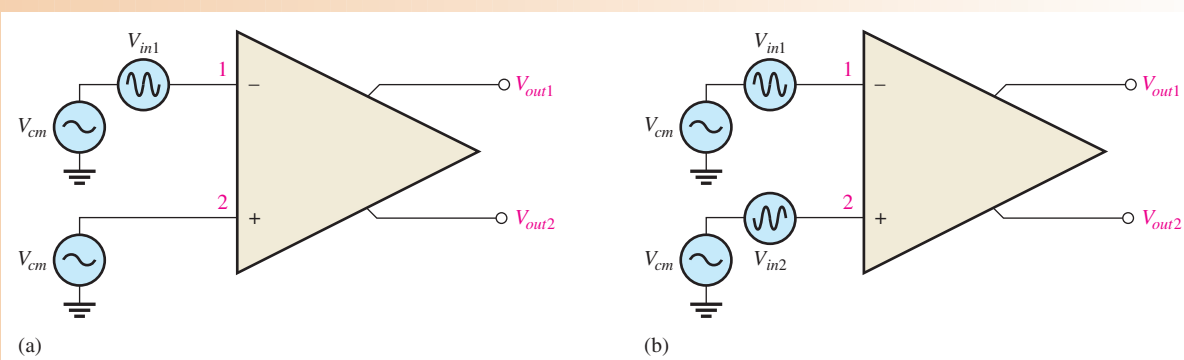

▲ FIGURE 10

www.EngineeringBooksPdf.com

Solution **(a)** CMRR $= A_{v(d)}/A_{cm}$. Therefore,

$$A_{cm} = \frac{A_{v(d)}}{\text{CMRR}} = \frac{2500}{30{,}000} = \mathbf{0.083}$$

(b) CMRR $= 20 \log(30{,}000) =$ **89.5 dB**

(c) In Figure 10(a), the differential input voltage, $V_{in(d)}$, is the difference between the voltage on input 1 and that on input 2. Since input 2 is grounded, the voltage is zero. Therefore,

$$V_{in(d)} = V_{in1} - V_{in2} = 500\,\mu\text{V} - 0\text{ V} = 500\,\mu\text{V}$$

The output signal voltage in this case is taken at output 1.

$$V_{out1} = A_{v(d)}V_{in(d)} = (2500)(500\,\mu\text{V}) = \mathbf{1.25\text{ V rms}}$$

In Figure 10(b), the differential input voltage is the difference between the two opposite-polarity, 500 μV signals.

$$V_{in(d)} = V_{in1} - V_{in2} = 500\,\mu\text{V} - (-500\,\mu\text{V}) = 1000\,\mu\text{V} = 1\text{ mV}$$

The output signal voltage is

$$V_{out1} = A_{v(d)}V_{in(d)} = (2500)(1\text{ mV}) = \mathbf{2.5\text{ V rms}}$$

This shows that a differential input (two opposite-polarity signals) results in a gain that is double that for a single-ended input.

(d) The common-mode input is 100 mV rms. The common-mode gain A_{cm} is 0.083. The interference voltage on the output, therefore, is

$$A_{cm} = \frac{V_{out(cm)}}{V_{in(cm)}}$$

$$V_{out(cm)} = A_{cm}V_{in(cm)} = (0.083)(100\text{ mV}) = \mathbf{8.3\text{ mV}}$$

Related Problem The amplifier in Figure 10 has a differential voltage gain of 4200 and a CMRR of 25,000. For the same single-ended and differential input signals as described in the example: **(a)** Find A_{cm}. **(b)** Express the CMRR in dB. **(c)** Determine the rms output signal for parts (a) and (b) of the figure. **(d)** Determine the rms interference (common-mode) voltage appearing on the output.

SECTION 2 CHECKUP

1. Distinguish between differential and single-ended inputs.
2. Define *common-mode rejection.*
3. For a given value of differential gain, does a higher CMRR result in a higher or lower common-mode gain?

3 OP-AMP PARAMETERS

In this section, several important op-amp parameters are defined. (These are listed in the objectives that follow.) Also, several popular IC op-amps are compared in terms of these parameters.

www.EngineeringBooksPdf.com

After completing this section, you should be able to

- **Discuss several op-amp parameters**
  - Define *input offset voltage*
  - Discuss input offset voltage drift with temperature
  - Define *input bias current*
  - Define *input resistance*
  - Define *input offset current*
  - Define *output resistance*
  - Discuss common-mode input voltage range
  - Discuss open-loop voltage gain
  - Define *common-mode rejection ratio*
  - Define *slew rate*
  - Discuss frequency response
  - Compare the parameters of several types of IC op-amps

Input Offset Voltage, V_{OS}

The ideal op-amp produces zero volts out for zero volts in. In a practical op-amp, however, a small dc voltage, $V_{OUT(error)}$, appears at the output when no differential input voltage is applied. Its primary cause is a slight mismatch of the base-emitter voltages of the differential input stage of an op-amp.

As specified on an op-amp data sheet, the *input offset voltage,* V_{OS}, is the differential dc voltage required between the inputs to force the differential output to zero volts. Typical values of input offset voltage are in the range of 2 mV or less. In the ideal case, it is 0 V.

Input Offset Voltage Drift with Temperature The *input offset voltage drift* is a parameter related to V_{OS} that specifies how much change occurs in the input offset voltage for each degree change in temperature. Typical values range anywhere from about 5 μV per degree Celsius to about 50 μV per degree Celsius. Usually, an op-amp with a higher nominal value of input offset voltage exhibits a higher drift. Extremely low-drift op-amps are available for precision applications that have input offset drift of less than 0.02 μV/°C.

Input Bias Current, I_{BIAS}

You have seen that the input terminals of a diff-amp are the transistor bases and, therefore, the input currents are the base currents.

The *input bias current* is the direct current required by the inputs of the amplifier to properly operate the first stage. By definition, the input bias current is the average of both input currents and is calculated as follows:

$$I_{BIAS} = \frac{I_1 + I_2}{2}$$

Equation 3

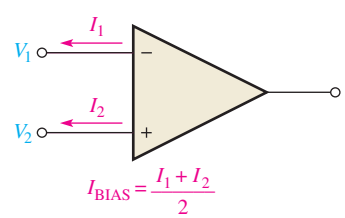

▲ FIGURE 11

Input bias current is the average of the two op-amp input currents.

The concept of input bias current is illustrated in Figure 11.

Input Resistance, R_{in}

Two basic ways of specifying the input resistance of an op-amp are the differential and the common mode. The *differential input resistance* is the total resistance, $R_{in(diff)}$, between the

www.EngineeringBooksPdf.com

inverting and the noninverting inputs, as illustrated in Figure 12(a). Differential resistance is measured by determining the change in bias current for a given change in differential input voltage. The *common-mode input resistance* is the resistance, (R_{in}), between each input and ground and is measured by determining the change in bias current for a given change in common-mode input voltage. It is depicted in Figure 12(b).

▶ FIGURE 12

Op-amp input resistance.

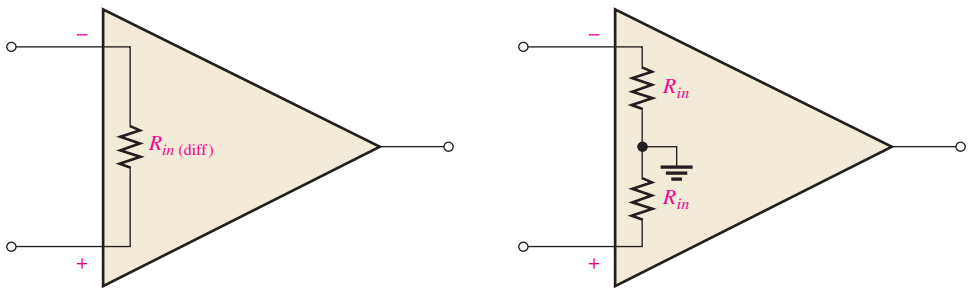

(a) Differential input resistance (b) Common-mode input resistance

Input Offset Current, I_{OS}

Ideally, the two input bias currents are equal, and thus their difference is zero. In a practical op-amp, however, the bias currents are not exactly equal.

The *input offset current* is the difference of the input bias currents, expressed as an absolute value.

Equation 4

$$I_{OS} = |I_1 - I_2|$$

Actual magnitudes of offset current are usually at least an order of magnitude (ten times) less than the bias current. In many applications, the offset current can be neglected. However, high-gain, high-input resistance amplifiers should have as little I_{OS} as possible because the difference in currents through large input resistances develops a substantial offset voltage, as shown in Figure 13.

▶ FIGURE 13

Effect of input offset current.

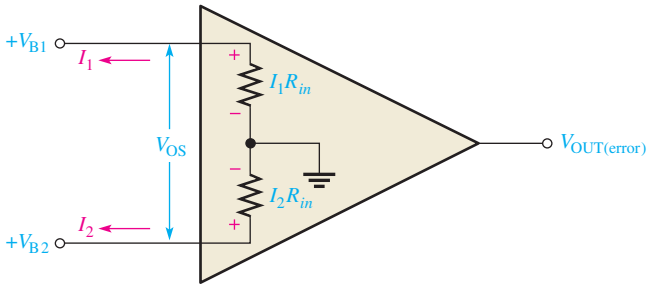

The offset voltage developed by the input offset current is

$$V_{OS} = I_1R_{in} - I_2R_{in} = (I_1 - I_2)R_{in}$$

Equation 5

$$V_{OS} = I_{OS}R_{in}$$

The error created by I_{OS} is amplified by the gain, A_v, of the op-amp and appears in the output as

Equation 6

$$V_{OUT(error)} = A_vI_{OS}R_{in}$$

A change in offset current with temperature affects the error voltage. Values of temperature coefficient for the offset current in the range of 0.5 nA/°C are common.

www.EngineeringBooksPdf.com

Output Resistance

The *output resistance* is the resistance, R_{out}, viewed from the output terminal of the op-amp, as indicated in Figure 14.

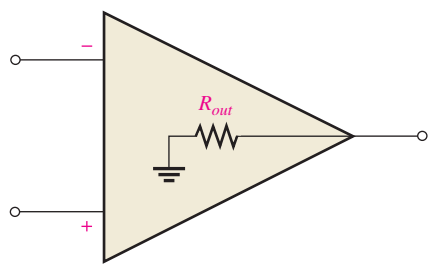

◀ FIGURE 14

Op-amp output resistance.

Common-Mode Input Voltage Range

All op-amps have limitations on the range of voltages over which they will operate. The *common-mode input voltage range* is the range of input voltages which, when applied to both inputs, will not cause clipping or other output distortion. Many op-amps have common-mode input voltage ranges of ±10 V with dc supply voltages of ±15 V.

Open-Loop Voltage Gain, A_{ol}

The **open-loop voltage gain** of the op-amp is the internal voltage gain of the device and represents the ratio of output voltage to input voltage when there are no external components. The open-loop voltage gain is set entirely by the internal design. Open-loop voltage gain can range to 200,000 or more. Data sheets often refer to the open-loop voltage gain as the *large-signal voltage gain.*

Common-Mode Rejection Ratio, CMRR

The *common-mode rejection ratio* (CMRR), as discussed in conjunction with the diff-amp, is a measure of an op-amp's ability to reject common-mode signals. The differential voltage gain ($A_{v(d)}$) of an op-amp is generally defined as its open-loop gain (A_{ol}). An infinite value of CMRR means that the output is zero when the same signal is applied to both inputs (common-mode).

An infinite CMRR is never achieved in practice, but a good op-amp does have a very high value of CMRR. As previously discussed, common-mode signals are undesired interference voltages such as 60 Hz power-supply ripple and noise voltages due to pickup of radiated energy. A high CMRR enables the op-amp to virtually eliminate these low-frequency interference signals from the output.

The accepted definition of CMRR for an op-amp is the open-loop voltage gain (A_{ol}) divided by the common-mode gain (A_{cm}).

$$\mathbf{CMRR} = \frac{A_{ol}}{A_{cm}} \qquad \text{Equation 7}$$

CMRR is commonly expressed in decibels as follows:

$$\mathbf{CMRR} = 20\log\left(\frac{A_{ol}}{A_{cm}}\right) \qquad \text{Equation 8}$$

www.EngineeringBooksPdf.com

EXAMPLE 3

A certain op-amp has an open-loop voltage gain of 100,000 and a common-mode gain of 0.25. Determine the CMRR and express it in decibels.

Solution

$$\text{CMRR} = \frac{A_{ol}}{A_{cm}} = \frac{100{,}000}{0.25} = \mathbf{400{,}000}$$

$$\text{CMRR} = 20\log(400{,}000) = \mathbf{112\ dB}$$

Related Problem If a particular op-amp has a CMRR of 90 dB and a common-mode gain of 0.4, what is the open-loop voltage gain?

Slew Rate, SR

The maximum rate of change of the output voltage in response to a step input voltage is the *slew rate* of an op-amp. The slew rate is dependent upon the high frequency response of the amplifier stages within the op-amp. The high frequency response is limited only by the junction capacitances of the transistors. The low frequency response goes down to dc (0 Hz) because there are no coupling capacitors.

Slew rate is measured with an op-amp connected as shown in Figure 15(a). This particular op-amp connection is a unity-gain, noninverting configuration that will be discussed in Section 5. It gives a worst-case (slowest) slew rate. As shown in part (b), a pulse is applied to the input, and the ideal output voltage is measured. The width of the input pulse must be sufficient to allow the output to "slew" from its lower limit to its upper limit, as shown. As you can see, a certain time interval, Δt, is required for the output voltage to go from its lower limit $-V_{max}$ to its upper limit $+V_{max}$, once the input step is applied. The slew rate is expressed as

Equation 9

$$\textbf{Slew rate} = \frac{\Delta V_{out}}{\Delta t}$$

where $\Delta V_{out} = +V_{max} - (-V_{max})$. The unit of slew rate is volts per microsecond (V/μs).

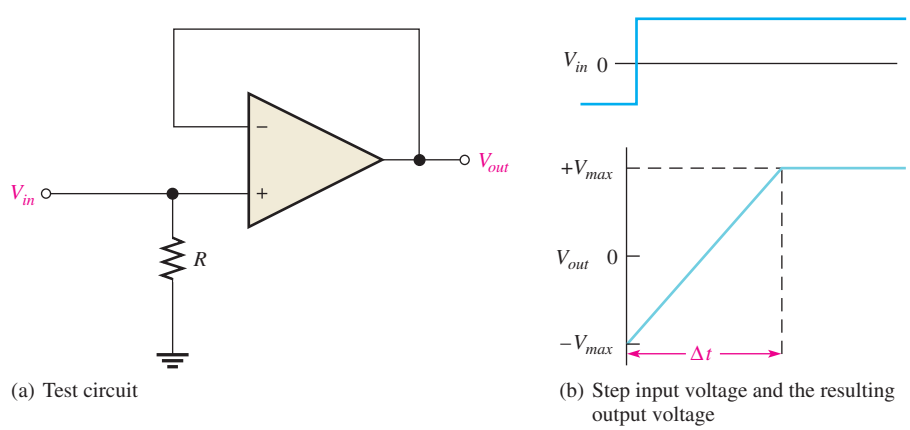

(a) Test circuit

(b) Step input voltage and the resulting output voltage

▲ **FIGURE 15**

Measurement of slew rate.

www.EngineeringBooksPdf.com

EXAMPLE 4

The output voltage of a certain op-amp appears as shown in Figure 16 in response to a step input. Determine the slew rate.

▶ FIGURE 16

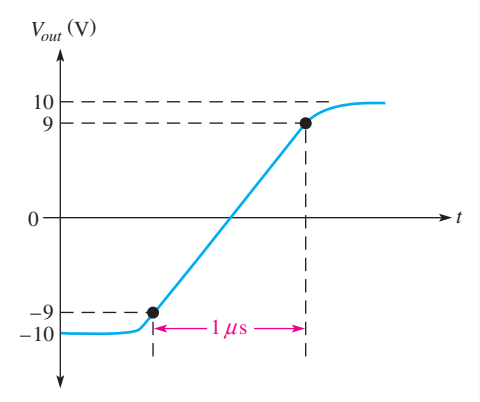

Solution The output goes from the lower to the upper limit in 1 μs. Since this response is not ideal, the limits are taken at the 90% points, as indicated. Thus, the upper limit is +9 V and the lower limit is −9 V. The slew rate is

$$\text{Slew rate} = \frac{\Delta V_{out}}{\Delta t} = \frac{+9\text{ V} - (-9\text{ V})}{1\ \mu\text{s}} = \mathbf{18\ V/\mu s}$$

Related Problem When a pulse is applied to an op-amp, the output voltage goes from −8 V to +7 V in 0.75 μs. What is the slew rate?

Comparison of Op-Amp Parameters

Depending on the requirements for an application, a designer can choose to optimize one or more specifications for op-amps. Manufacturers provide selection guides to help tailor the requirements to a specific op-amp. Table 1 shows some key specifications for a few popular op-amps; there are many other specifications that may need to be considered for a given application (such as noise specifications, power requirements, bandwidth, output current, and drift). Complete specifications are given in the manufacturer's data sheets.

▼ TABLE 1

OP-AMP	V_{OS} (mV)	I_{BIAS} (nA)	R_{in} (MΩ)	A_{ol} ($\times 10^6$)	SR (V/μs)	CMRR (dB)	COMMENT
AD8009AR	5	150	—	—	5500	50	Ultra fast, current feedback
AD8041A	7	2000	0.16	0.056	160	74	BW = 160 Hz, rail-to-rail
AD8055A	5	1200	10	0.0035	1400	82	Very fast voltage feedback
LF353	5	0.050	10^{12}	3.0	13	100	Low cost, JFET inputs
LM101A	7.5	250	1.5	0.16	—	80	General-purpose
LM741C	6	500	0.3	0.20	0.5	70	Industry standard; low cost
LMP2021	±0.005	0.025	—	100	2.6	139	Very low drift, precision
OP113E	0.075	600	—	2.4	1.2	100	General-purpose
OP177A	0.01	1.5	26	12	0.3	130	Very high CMRR
OP184E	0.065	350	—	0.24	2.4	60	Precision, rail-to-rail
OPA365	0.2	0.010	—	1.0	25	100	Low power, low noise
OPA827	0.15	0.015	10^{13}	1.0	28	114	Low noise, precision

www.EngineeringBooksPdf.com

Other Features

Most available op-amps have three important features: short-circuit protection, no latch-up, and input offset nulling. Short-circuit protection keeps the circuit from being damaged if the output becomes shorted. The no-latch-up feature prevents the op-amp from hanging up in one output state (high or low voltage level) under certain input conditions. Input offset nulling is achieved by an external potentiometer that sets the output voltage at precisely zero with zero input.

SECTION 3 CHECKUP

1. List ten or more op-amp parameters.
2. List two parameters, not including frequency response, that are frequency dependent.
3. What is the difference between input bias current and input offset current?
4. What is the advantage of a high CMRR?
5. What are the units for slew rate?

4 NEGATIVE FEEDBACK

Negative feedback is one of the most useful concepts in electronics, particularly in op-amp applications. Negative feedback is the process whereby a portion of the output voltage of an amplifier is returned to the input with a phase angle that opposes (or subtracts from) the input signal.

After completing this section, you should be able to

- **Explain negative feedback in op-amp circuits**
  - Describe the effects of negative feedback
  - Discuss why negative feedback is used

Negative feedback is illustrated in Figure 17. A sample of the output signal is returned by the feedback network to the inverting (−) input of the differential amplifier. The op-amp has extremely high gain and amplifies the *difference* in the signals applied to the inverting and noninverting inputs. A very tiny difference in these two signals is all the op-amp needs to produce the required output. *When negative feedback is present, the noninverting and inverting inputs are nearly identical.* This concept can help you figure out what signal to expect in many op-amp circuits.

▶ FIGURE 17

Illustration of negative feedback.

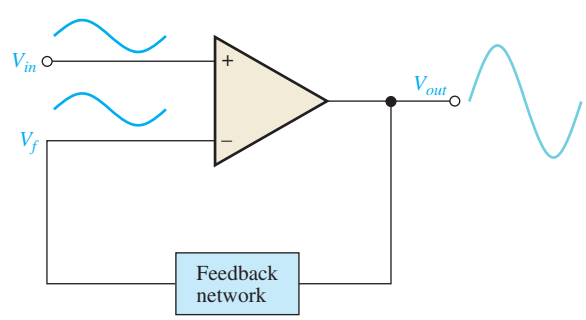

Now let's review how negative feedback works and why the signals at the inverting and noninverting terminals are nearly identical when negative feedback is used. Assume a 1.0 V input signal is applied to the noninverting terminal and the open-loop gain of the op-amp is 100,000. The amplifier responds to the voltage at its noninverting input terminal and moves

www.EngineeringBooksPdf.com

the output toward saturation. Immediately, a fraction of this output is returned to the inverting terminal through the feedback path. However, if the feedback signal reaches 1.0 V, there is nothing left for the op-amp to amplify! Thus, the feedback signal tries (but never quite succeeds) in matching the input signal. The gain is controlled by the amount of feedback used. When you are troubleshooting an op-amp circuit with negative feedback present, remember that the two inputs will look identical on a scope but in fact are very slightly different.

Now suppose something happens that reduces the internal gain of the op-amp. This causes the output signal to drop a small amount, returning a smaller signal to the inverting input via the feedback path. This means the difference between the signals is larger than it was. The output increases, compensating for the original drop in gain. The net change in the output is so small, it can hardly be measured. The main point is that any variation in the amplifier is immediately compensated for by the negative feedback, resulting in a very stable, predictable output.

Why Use Negative Feedback?

As you have seen, the inherent open-loop gain of a typical op-amp is very high (usually greater than 100,000). Therefore, an extremely small difference in the two input voltages drives the op-amp into its saturated output states. In fact, even the input offset voltage of the op-amp can drive it into saturation. For example, assume $V_{in} = 1$ mV and $A_{ol} = 100{,}000$. Then,

$$V_{in}A_{ol} = (1\text{ mV})(100{,}000) = 100\text{ V}$$

Since the output level of an op-amp can never reach 100 V, it is driven into saturation and the output is limited to its maximum output levels, as illustrated in Figure 18 for both a positive and a negative input voltage of 1 mV.

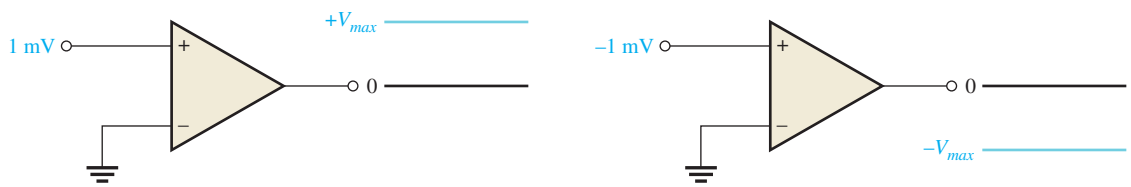

▲ FIGURE 18

Without negative feedback, an extremely small difference in the two input voltages drives the op-amp to its output limits and it becomes nonlinear.

The usefulness of an op-amp operated in this manner is severely restricted and is generally limited to comparator applications. With negative feedback, the overall closed-loop voltage gain (A_{cl}) can be reduced and controlled so that the op-amp can function as a linear amplifier. In addition to providing a controlled, stable voltage gain, negative feedback also provides for control of the input and output resistances and amplifier bandwidth. Table 2 summarizes the general effects of negative feedback on op-amp performance.

▼ TABLE 2

	VOLTAGE GAIN	INPUT *R*	OUTPUT *R*	BANDWIDTH
Without negative feedback	A_{ol} is too high for linear amplifier applications	Relatively high (see Table 1)	Relatively low	Relatively narrow (because the gain is so high)
With negative feedback	A_{cl} is set to desired value by the feedback network	Can be increased or reduced to a desired value depending on type of circuit	Can be reduced to a desired value	Significantly wider

www.EngineeringBooksPdf.com

SECTION 4 CHECKUP

1. What are the benefits of negative feedback in an op-amp circuit?
2. Why is it necessary to reduce the gain of an op-amp from its open-loop value?
3. When troubleshooting an op-amp circuit in which negative feedback is present, what do you expect to observe on the input terminals?

5 OP-AMP CONFIGURATIONS WITH NEGATIVE FEEDBACK

An op-amp can be connected in two basic ways using negative feedback to stabilize the gain. The extremely high open-loop gain of an op-amp creates an unstable situation because a small noise voltage on the input can be amplified to a point where the amplifier is driven out of its linear region. Also, unwanted oscillations can occur. In addition, the open-loop gain parameter of an op-amp can vary greatly from one device to the next. Negative feedback takes a portion of the output and applies it back out of phase with the input, creating an effective reduction in gain. This closed-loop gain is usually much less than the open-loop gain and independent of it.

After completing this section, you should be able to

- **Analyze op-amp configurations**
  - Identify the noninverting amplifier configuration
  - Determine the voltage gain of a noninverting amplifier
  - Identify the voltage-follower configuration
  - Identify the inverting amplifier configuration
  - Determine the voltage gain of an inverting amplifier

Closed-Loop Voltage Gain, A_{cl}

The **closed-loop voltage gain** is the voltage gain of an op-amp with negative feedback. The amplifier configuration consists of the op-amp and an external feedback network that connects the output to the inverting input. The closed-loop voltage gain is then determined by the component values in the feedback network and can be precisely controlled by them.

Noninverting Amplifier

An op-amp connected in a closed-loop configuration as a **noninverting amplifier** is shown in Figure 19. The input signal is applied to the noninverting (+) input. A portion of the output is applied back to the inverting (−) input through the feedback network. This

FIGURE 19

Noninverting amplifier.

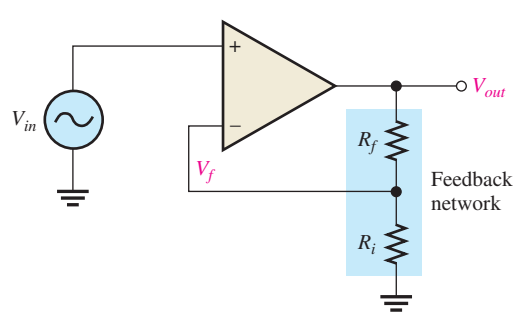

www.EngineeringBooksPdf.com

constitutes negative feedback. The feedback fraction, B, is determined by R_f and R_i, which form a voltage-divider. The attenuation of the feedback network is the portion of the output returned to the inverting input and determines the gain of the amplifier as you will see. This smaller feedback voltage, V_f, can be written

$$V_f = \left(\frac{R_i}{R_i + R_f}\right)V_{out} = BV_{out}$$

The differential voltage, V_{diff}, between the op-amp's input terminals is illustrated in Figure 20 and can be expressed as

$$V_{diff} = V_{in} - V_f$$

This input differential voltage is forced to be very small as a result of the negative feedback and the high open-loop gain, A_{ol}. Therefore, a close approximation is

$$V_{in} \cong V_f$$

By substitution,

$$V_{in} \cong BV_{out}$$

Rearranging,

$$\frac{V_{out}}{V_{in}} \cong \frac{1}{B}$$

The ratio of the output voltage to the input voltage is the closed-loop gain. This result shows that the closed-loop gain for the noninverting amplifier, $A_{cl(\mathrm{NI})}$, is approximately

$$A_{cl(\mathrm{NI})} = \frac{V_{out}}{V_{in}} \cong \frac{1}{B}$$

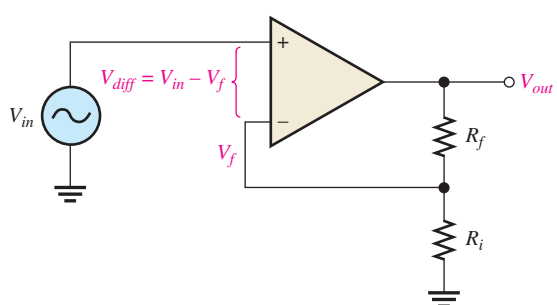

◀ **FIGURE 20**

Differential input, $V_{in} - V_f$.

The fraction of the output voltage, V_{out}, that is returned to the inverting input is found by applying the voltage-divider rule to the feedback network.

$$V_{in} \cong BV_{out} \cong \left(\frac{R_i}{R_i + R_f}\right)V_{out}$$

Rearranging,

$$\frac{V_{out}}{V_{in}} = \left(\frac{R_i + R_f}{R_i}\right)$$

which can be expressed as follows:

$$\boldsymbol{A_{cl(\mathrm{NI})} = 1 + \frac{R_f}{R_i}}$$ **Equation 10**

Equation 10 shows that the closed-loop voltage gain, $A_{cl(\mathrm{NI})}$, of the noninverting (NI) amplifier is not dependent on the op-amp's open-loop gain but can be set by selecting

www.EngineeringBooksPdf.com

values of R_i and R_f. This equation is based on the assumption that the open-loop gain is very high compared to the ratio of the feedback resistors, causing the input differential voltage, V_{diff}, to be very small. In nearly all practical circuits, this is an excellent assumption.

EXAMPLE 5

Determine the closed-loop voltage gain of the amplifier in Figure 21.

▶ FIGURE 21

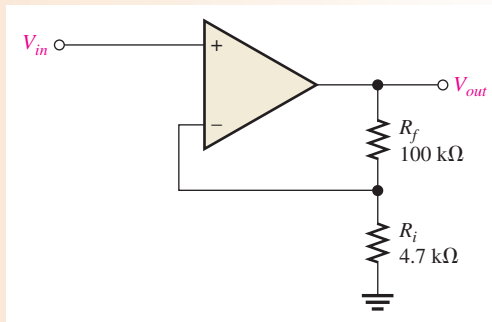

Solution This is a noninverting op-amp configuration. Therefore, the closed-loop voltage gain is

$$A_{cl(\mathrm{NI})} = 1 + \frac{R_f}{R_i} = 1 + \frac{100\ \mathrm{k\Omega}}{4.7\ \mathrm{k\Omega}} = \mathbf{22.3}$$

Related Problem If R_f in Figure 21 is increased to 150 kΩ, determine the closed-loop gain.

Open Multisim file E18-05; files are found at www.pearsonhighered.com/floyd/. Measure the closed-loop gain of the amplifier. Change R_f to 150 kΩ and measure the gain.

Voltage-Follower The **voltage-follower** configuration is a special case of the noninverting amplifier where all of the output voltage is fed back to the inverting (−) input by a straight connection, as shown in Figure 22. As you can see, the straight feedback connection has a voltage gain of approximately 1. The closed-loop voltage gain of a noninverting amplifier is $1/B$ as previously derived. Since $B = 1$, the closed-loop gain of the voltage-follower is

Equation 11

$$A_{cl(\mathrm{VF})} = 1$$

▶ FIGURE 22

Op-amp voltage-follower.

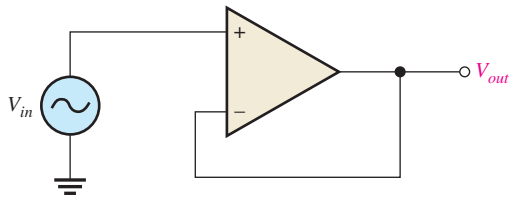

The most important features of the voltage-follower configuration are its very high input resistance and its very low output resistance. These features make it a nearly ideal buffer amplifier for interfacing high-resistance sources and low-resistance loads. This is discussed further in Section 6.

Inverting Amplifier

An op-amp connected as an **inverting amplifier** with a controlled amount of voltage gain is shown in Figure 23. The input signal is applied through a series input resistor (R_i) to

www.EngineeringBooksPdf.com

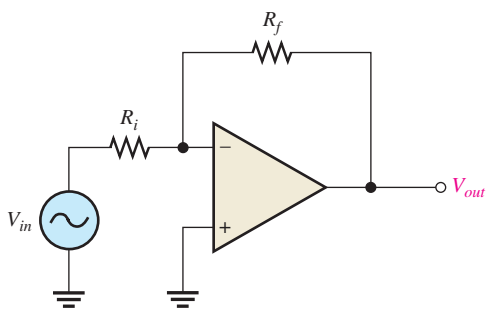

◀ **FIGURE 23**

Inverting amplifier.

the inverting (−) input. Also, the output is fed back through R_f to the inverting input. The noninverting (+) input is grounded.

The ideal op-amp parameters, in particular, the infinite input resistance, are useful for analyzing the inverting amplifier. An infinite input resistance implies that there is *no* current out of the inverting input. If there is no current through the input resistance, then there must be *no* voltage drop between the inverting and noninverting inputs. This means that the voltage at the inverting (−) input is zero because the noninverting (+) input is grounded. This zero voltage at the inverting input terminal is referred to as *virtual ground.* This condition is illustrated in Figure 24(a).

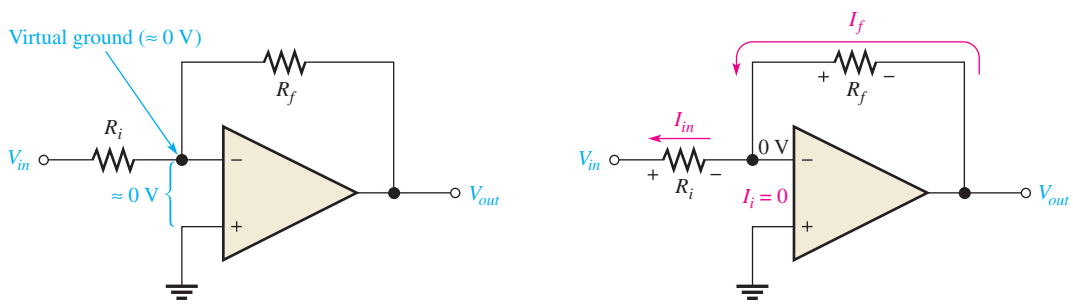

(a) Virtual ground

(b) $I_{in} = I_f$ and current at the inverting input, $I_i = 0$

▲ **FIGURE 24**

Virtual ground concept and closed-loop voltage gain development for the inverting amplifier.

Since there is no current at the inverting input, the current through R_i and the current through R_f are equal, as shown in Figure 24(b).

$$I_{in} = I_f$$

The voltage across R_i equals V_{in} because of virtual ground on the other side of the resistor. Therefore,

$$I_{in} = \frac{V_{in}}{R_i}$$

Also, the voltage across R_f equals $-V_{out}$ because of virtual ground, and therefore,

$$I_f = \frac{-V_{out}}{R_f}$$

Since $I_f = I_{in}$,

$$\frac{-V_{out}}{R_f} = \frac{V_{in}}{R_i}$$

www.EngineeringBooksPdf.com

Rearranging the terms,

$$\frac{V_{out}}{V_{in}} = -\frac{R_f}{R_i}$$

Of course, V_{out}/V_{in} is the overall gain of the inverting amplifier.

Equation 12

$$\boldsymbol{A_{cl(\mathrm{I})} = -\frac{R_f}{R_i}}$$

Equation 12 shows that the closed-loop voltage gain, $A_{cl(\mathrm{I})}$, of the inverting amplifier is the ratio of the feedback resistance, R_f, to the input resistance, R_i. *The closed-loop gain is independent of the op-amp's internal open-loop gain.* Thus, the negative feedback stabilizes the voltage gain. The negative sign indicates inversion.

EXAMPLE 6

Given the op-amp configuration in Figure 25, determine the value of R_f required to produce a closed-loop voltage gain of -100.

▶ **FIGURE 25**

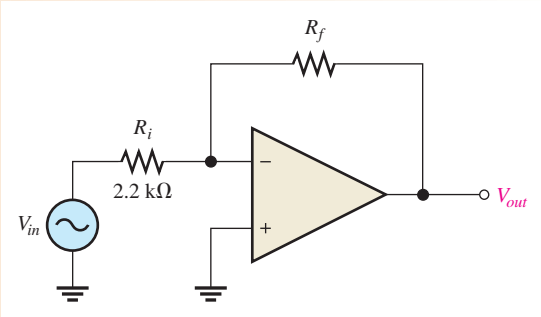

Solution Knowing that $R_i = 2.2\ \mathrm{k\Omega}$ and $A_{cl(\mathrm{I})} = -100$, calculate R_f as follows:

$$A_{cl(\mathrm{I})} = -\frac{R_f}{R_i}$$

$$R_f = -A_{cl(\mathrm{I})}R_i = -(-100)(2.2\ \mathrm{k\Omega}) = \mathbf{220\ k\Omega}$$

Related Problem **(a)** If R_i is changed to 2.7 kΩ in Figure 25, what value of R_f is required to produce a closed-loop gain of -25?

(b) If R_f failed open, what would you expect to see at the output?

Open Multisim file E18-06. Set the value of R_f to the value calculated in the example and measure the closed-loop gain.

SECTION 5 CHECKUP

1. What is the main purpose of negative feedback?
2. The closed-loop voltage gain of each of the op-amp configurations discussed is dependent on the internal open-loop voltage gain of the op-amp. (True or False)
3. The attenuation (B) of the negative feedback circuit of a noninverting op-amp configuration is 0.02. What is the closed-loop gain of the amplifier?
4. If you are troubleshooting a noninverting amplifier with a input voltage of 100 mV, what voltage should you find on the inverting input?
5. If you are troubleshooting an inverting amplifier with an input voltage of 100 mV, what voltage should you find on the inverting input?

www.EngineeringBooksPdf.com

6 OP-AMP RESISTANCES

A negative feedback connection affects the input and output resistances of both the inverting and noninverting amplifiers. The overall input and output resistances of the amplifier are affected by both the internal resistances of the op-amp, designated R_{in} and R_{out}, and the external circuit resistances, designated R_i and R_f. Op-amp internal resistances are also referred to on some data sheets as input impedance, Z_{in}, and output impedance, Z_{out}. In the case of pure resistance, the terms *resistance* and *impedance* can be used interchangeably.

After completing this section, you should be able to

- **Describe the effects of negative feedback on the basic op-amp configurations**
  - Determine the input and output resistances for the noninverting amplifier
  - Determine the input and output resistances for the voltage-follower
  - Determine the input and output resistances for the inverting amplifier

Resistances of a Noninverting Amplifier

The input resistance of a noninverting amplifier configuration, $R_{in(NI)}$, shown in Figure 26, is greater than the internal input resistance, R_{in}, of the op-amp itself (without feedback) by a factor of $1 + A_{ol}B$, as expressed by the following equation:

$$R_{in(NI)} = (1 + A_{ol}B)R_{in}$$ Equation 13

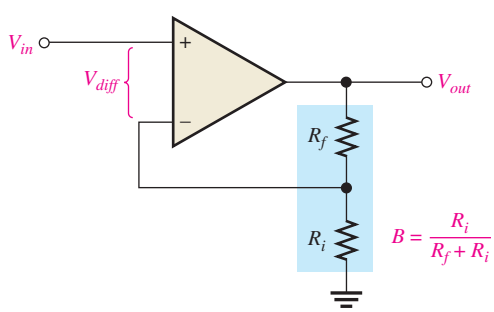

FIGURE 26
Noninverting amplifier.

The output resistance with negative feedback, $R_{out(NI)}$, is less than the op-amp's internal output resistance, R_{out}, by a factor of $1/(1 + A_{ol}B)$, expressed as follows:

$$R_{out(NI)} = \frac{R_{out}}{1 + A_{ol}B}$$ Equation 14

In summary, negative feedback in a noninverting configuration increases the input resistance and decreases the output resistance. The increase of input resistance and decrease in output resistance is close to ideal, as illustrated in the following example.

www.EngineeringBooksPdf.com

EXAMPLE 7

(a) Determine the input and output resistances of the amplifier in Figure 27. The op-amp data sheet gives $R_{in} = 2\ \text{M}\Omega$, $R_{out} = 75\ \Omega$, and $A_{ol} = 200{,}000$.

(b) Find the closed-loop voltage gain.

▶ FIGURE 27

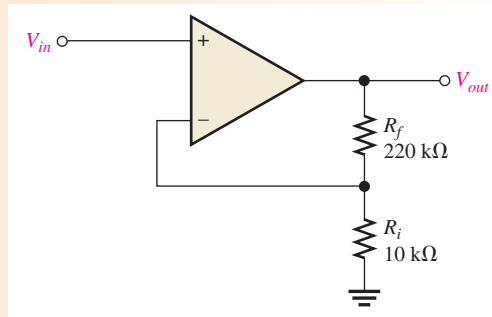

Solution

(a) The attenuation, B, of the feedback circuit is

$$B = \frac{R_i}{R_i + R_f} = \frac{10\ \text{k}\Omega}{230\ \text{k}\Omega} = 0.0435$$

$$R_{in(\text{NI})} = (1 + A_{ol}B)R_{in} = [1 + (200{,}000)(0.0435)](2\ \text{M}\Omega) = \mathbf{17.4\ G\Omega}$$

$$R_{out(\text{NI})} = \frac{R_{out}}{1 + A_{ol}B} = \frac{75\ \Omega}{1 + 8700} = \mathbf{8.6\ m\Omega}$$

Notice that $R_{in(\text{NI})}$ and $R_{out(\text{NI})}$ are close to ideal values.

(b) $A_{cl(\text{NI})} = \dfrac{1}{B} = \dfrac{1}{0.0435} = \mathbf{23.0}$

Related Problem

(a) Determine the input and output resistances in Figure 27 for op-amp data sheet values of $R_{in} = 3.5\ \text{M}\Omega$, $R_{out} = 82\ \Omega$, and $A_{ol} = 135{,}000$.

(b) Find $A_{cl(\text{NI})}$.

Open Multisim file E18-07. Measure the closed-loop gain.

Resistances of a Voltage-Follower

Since the voltage-follower is a special case of the noninverting configuration, the same resistance formulas are used, but with $B = 1$.

Equation 15

$$R_{in(\text{VF})} = (1 + A_{ol})R_{in}$$

Equation 16

$$R_{out(\text{VF})} = \frac{R_{out}}{1 + A_{ol}}$$

As you can see, the voltage-follower input resistance is greater for a given A_{ol} and R_{in} than for the noninverting configuration with the voltage-divider feedback circuit. Also, its output resistance is much smaller because B is normally much less than 1 for a noninverting configuration.

www.EngineeringBooksPdf.com

EXAMPLE 8

The same op-amp in Example 7 is used in a voltage-follower configuration. Determine the input and output resistances.

Solution Since $B = 1$,

$$R_{in(\mathrm{VF})} = (1 + A_{ol})R_{in} = (1 + 200{,}000)2\ \mathrm{M\Omega} = \mathbf{400\ G\Omega}$$

$$R_{out(\mathrm{VF})} = \frac{R_{out}}{1 + A_{ol}} = \frac{75\ \Omega}{1 + 200{,}000} = \mathbf{375\ \mu\Omega}$$

Notice that $R_{in(\mathrm{VF})}$ is much greater than $R_{in(\mathrm{NI})}$, and $R_{out(\mathrm{VF})}$ is much less than $R_{out(\mathrm{NI})}$ from Example 7.

Related Problem If the op-amp in this example is replaced with one having a higher open-loop gain, how are the input and output resistances affected?

Resistances of an Inverting Amplifier

For the inverting amplifier configuration shown in Figure 28, the input resistance of the op-amp, $R_{in(\mathrm{I})}$, approximately equals the external input resistance, R_i, because of the virtual ground at the inverting input.

$$R_{in(\mathrm{I})} \cong R_i \qquad \text{Equation 17}$$

The output resistance, $R_{out(\mathrm{I})}$, is the same as for the noninverting amplifier.

$$R_{out(\mathrm{I})} = \frac{R_{out}}{1 + A_{ol}B} \qquad \text{Equation 18}$$

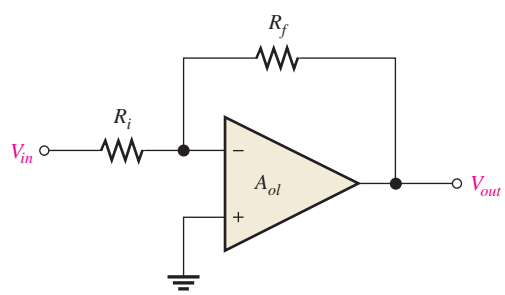

FIGURE 28

Inverting amplifier.

EXAMPLE 9

The op-amp in Figure 29 has the following parameters: $A_{ol} = 50{,}000$, $R_{in} = 4\ \mathrm{M\Omega}$, and $R_{out} = 50\ \Omega$.

(a) Find the values of the input and output resistances.

(b) Determine the closed-loop voltage gain.

FIGURE 29

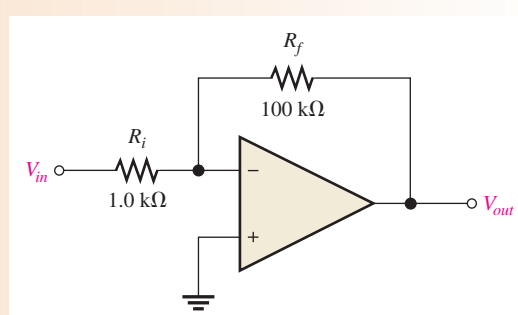

www.EngineeringBooksPdf.com

Solution **(a)** $R_{in(I)} \cong R_i = \mathbf{1.0\ k\Omega}$

$$R_{out(I)} = \frac{R_{out}}{1 + A_{ol}B} = \frac{R_{out}}{1 + A_{ol}(R_i/(R_i + R_f))}$$

$$= \frac{50\ \Omega}{1 + (50{,}000)(1\ k\Omega/101\ k\Omega)} = \mathbf{101\ m\Omega}$$

(b) $A_{cl(I)} = -\dfrac{R_f}{R_i} = -\dfrac{100\ k\Omega}{1.0\ k\Omega} = \mathbf{-100}$

Related Problem Determine $R_{in(I)}$, $R_{out(I)}$, and A_{cl} in Figure 29 for the following values: $A_{ol} = 100{,}000$; $R_{in} = 5\ M\Omega$; $R_{out} = 75\ \Omega$; $R_i = 560\ \Omega$, $R_f = 82\ k\Omega$.

Open Multisim file E18-09. Measure the closed-loop gain.

SECTION 6 CHECKUP

1. How does the input resistance of a noninverting amplifier configuration compare to the input resistance of the op-amp itself?
2. Connecting an op-amp in a voltage-follower configuration (increases, decreases) the input resistance.
3. Given that $R_f = 100\ k\Omega$, $R_i = 2\ k\Omega$, $A_{ol} = 120{,}000$, $R_{in} = 2\ M\Omega$, and $R_{out} = 60\ \Omega$, determine $R_{in(I)}$ and $R_{out(I)}$ for an inverting amplifier configuration.

7 TROUBLESHOOTING

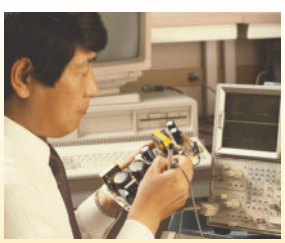

As a technician, you will encounter situations in which an op-amp or its associated circuitry has malfunctioned. The op-amp is a complex integrated circuit with many types of internal failures possible. However, since you cannot troubleshoot the op-amp internally, treat it as a single device with only a few connections to it. If it fails, replace it just as you would a resistor, capacitor, or transistor.

After completing this section, you should be able to

- **Troubleshoot op-amp circuits**
  - Compensate for input offset voltage
  - Troubleshoot for faulty op-amps, open resistors, and incorrect offset compensation

In the basic op-amp configurations, there are only a few external components that can fail. These are the feedback resistor, the input resistor, and the potentiometer used for offset voltage compensation. Also, of course, the op-amp itself can fail, there can be faulty contacts in the circuit, or there can be an incorrect power supply voltage.

Most integrated circuit op-amps provide a means of compensating for offset voltage. This is usually done by connecting an external potentiometer to designated pins on the IC package, as illustrated in Figure 30(a) and (b) for a 741 op-amp. The two terminals are labeled *offset null*. With no input, the potentiometer is simply adjusted until the output voltage reads 0, as shown in Figure 30(c).

www.EngineeringBooksPdf.com

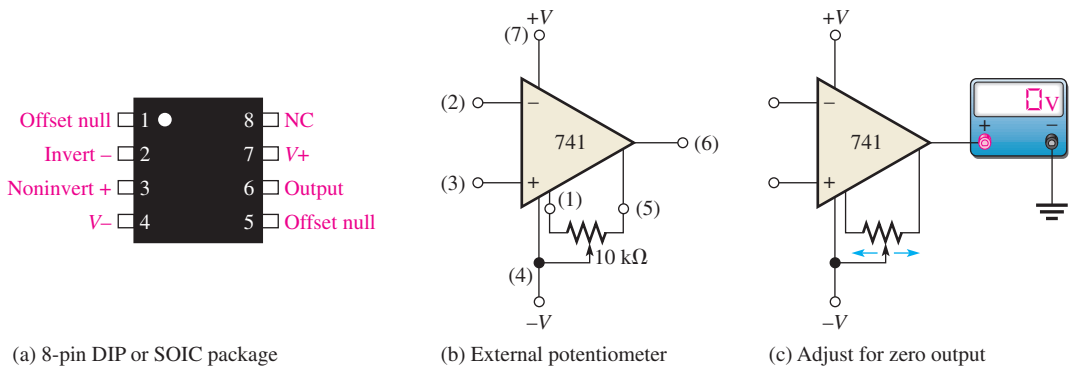

(a) 8-pin DIP or SOIC package (b) External potentiometer (c) Adjust for zero output

▲ FIGURE 30

Input offset voltage compensation for a 741 op-amp.

Faults in a Noninverting Amplifier

The first thing to do when you suspect a faulty circuit is to check for the proper supply voltage and ground and make sure there is no dc offset on the input signal. After you have done that, troubleshoot for other possible faults.

Open Feedback Resistor If the feedback resistor, R_f, in Figure 31 opens, the op-amp is operating with its very high open-loop gain, which causes the input signal to drive

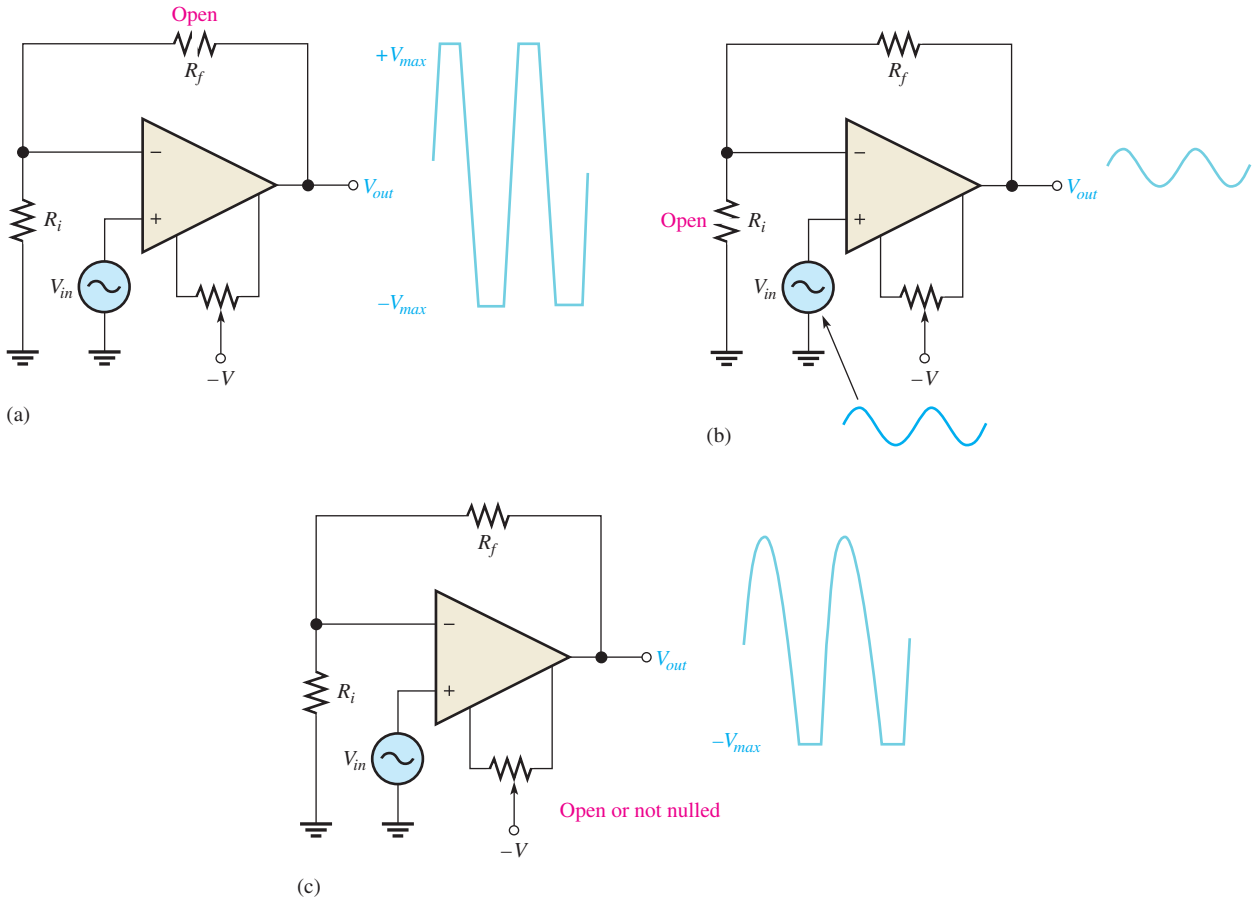

▲ FIGURE 31

Faults in a noninverting amplifier.

www.EngineeringBooksPdf.com

the device into nonlinear operation and results in a severely clipped output signal as shown in part (a).

Open Input Resistor In this case, you still have a closed-loop configuration. However, since R_i is open and effectively equal to infinity (∞), the closed-loop gain from Equation 10 is

$$A_{cl(\mathrm{NI})} = 1 + \frac{R_f}{R_i} = 1 + \frac{R_f}{\infty} = 1 + 0 = 1$$

This shows that the amplifier acts like a voltage-follower. You would observe an output signal that is the same as the input, as indicated in Figure 31(b).

Open or Incorrectly Adjusted Offset Null Potentiometer In this situation, the output offset voltage will cause the output signal to begin clipping on only one peak as the input signal is increased to a sufficient amplitude. This is indicated in Figure 31(c).

Faulty Op-Amp As mentioned, many things can happen to an op-amp. In general, an internal failure will result in a loss or distortion of the output signal. The best approach is to first make sure that there are no external failures or faulty conditions. If everything else is good, then the op-amp must be bad.

Faults in a Voltage-Follower

The voltage-follower is a special case of a noninverting amplifier. Except for a bad op-amp, a bad external connection, or a problem with the offset null potentiometer, about the only thing that can happen in a voltage-follower circuit is an open feedback loop. This would have the same effect as an open feedback resistor as previously discussed.

Faults in an Inverting Amplifier

Open Feedback Resistor If R_f opens as indicated in Figure 32(a), the input signal still feeds through the input resistor and is amplified by the high open-loop gain of the op-amp. This forces the device to be driven into nonlinear operation, and you will see an output something like that shown. This is the same result as in the noninverting configuration.

Open Input Resistor This prevents the input signal from getting to the op-amp input, so there will be no output signal, as indicated in Figure 32(b).

Failures in the op-amp itself or the offset null potentiometer have the same effects as previously discussed in the noninverting amplifier.

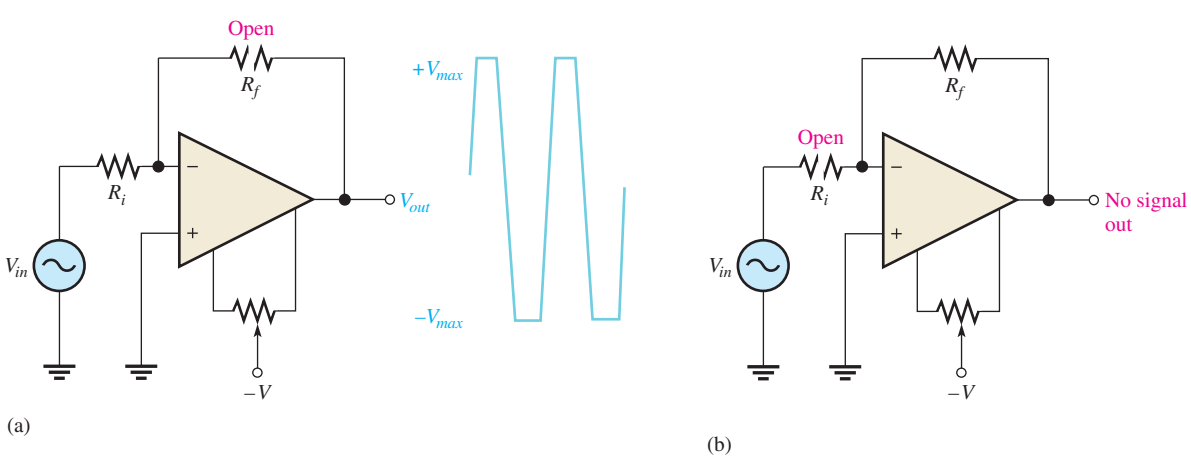

▲ **FIGURE 32**

Faults in an inverting amplifier.

www.EngineeringBooksPdf.com

SECTION 7 CHECKUP

1. If you notice that the op-amp output signal is beginning to clip on one peak as you increase the input signal, what should you check first?
2. If there is no op-amp output signal when there is a verified input signal, what are possible troubles?

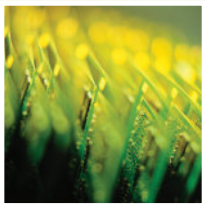

Application Assignment

PUTTING YOUR KNOWLEDGE TO WORK

A spectrophotometer system combines light optics with electronics to analyze the chemical makeup of various solutions. This type of system is common in chemical and medical laboratories as well as other areas. It is another example of mixed systems in which electronic circuits interface with other types of systems, such as mechanical and optical, to accomplish a specific function.

Description of the System

The light source in Figure 33 produces a beam of visible light containing a wide spectrum of wavelengths. Each component wavelength in the beam of light is refracted at a different angle by the prism, as indicated. Depending on the angle of the platform as set by the pivot angle controller, a certain wavelength passes through the narrow slit and is transmitted through the solution under analysis. By precisely pivoting the light source and prism, a selected wavelength can be transmitted. Every chemical and compound absorbs different wavelengths of light in different ways, so the resulting light coming through the solution has a unique "signature" that can be used to define the chemicals in the solution.

The photocell on the circuit board produces a voltage that is proportional to the amount of light and wavelength. The op-amp circuit amplifies the photovoltaic cell output and sends the resulting signal to the processing and display unit where the type of chemical(s) in the solution is identified. This is usually a microprocessor-based digital system. Although these other system blocks are interesting, our focus in this section is the photocell and op-amp circuit board.

Step 1: Relating the PC Board to a Schematic

Develop a complete schematic by carefully following the conductive traces on the PC board shown in Figure 33 to see

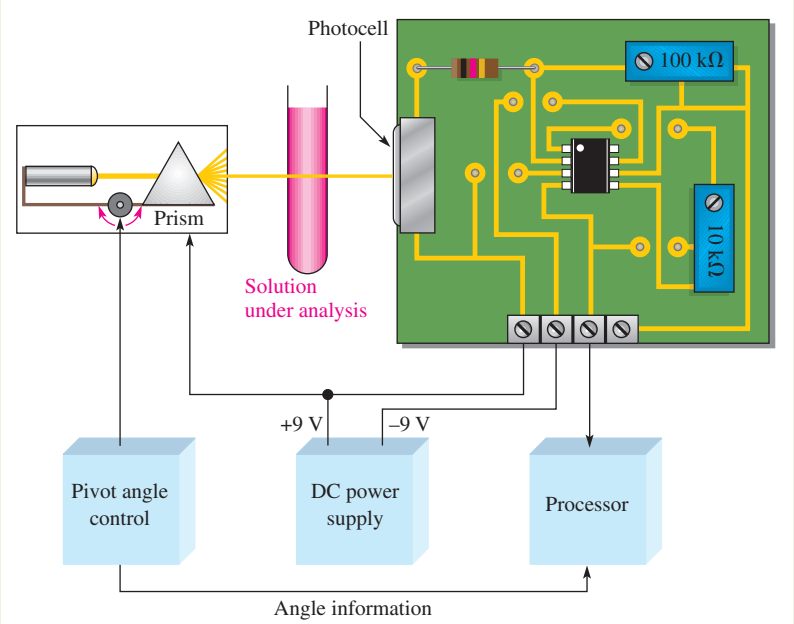

▶ **FIGURE 33**

Spectrophotometer system.

www.EngineeringBooksPdf.com

how the components are interconnected. The middle pin on the potentiometer is the variable. Some of the interconnecting traces are on the reverse side of the board, but if you are familiar with basic op-amp configurations, you should have no trouble figuring out the connections. Refer to Figure 30 for the pin layout of the 741 op-amp. This op-amp is housed in a surface-mount SOIC-8 package.

Step 2: Analyzing the Circuit

1. Determine the resistance value to which the feedback rheostat must be adjusted for a voltage gain of 10.
2. Assume the maximum linear output of the op-amp is 1 V less than the supply voltage. Determine the voltage gain required and the value to which the feedback resistance must be set to achieve the maximum linear output. The system light source produces constant light output from 400 nm to 700 nm, which is approximately the full range of visible light from violet to red. The maximum voltage from the photocell is 0.5 V at 800 nm.
3. Using the gain previously found, determine the op-amp output voltage over the range of wavelengths from 400 nm to 700 nm in 50 nm intervals and plot a graph of the voltage versus wavelength. Compare your graph to the normalized photocell response curve in Figure 34.

Step 3: Troubleshooting the Circuit

For each of the following problems, state the probable cause or causes:

1. Zero voltage at the op-amp output. List three possible causes.
2. Output of op-amp stays at approximately −8 V.
3. A small dc voltage on the op-amp output under no-light conditions.

Review

1. What is the purpose of the 100 kΩ potentiometer on the circuit board?
2. What is the purpose of the 10 kΩ potentiometer?
3. Explain why the light source and prism must be pivoted.

▶ **FIGURE 34**

Photocell response curve.

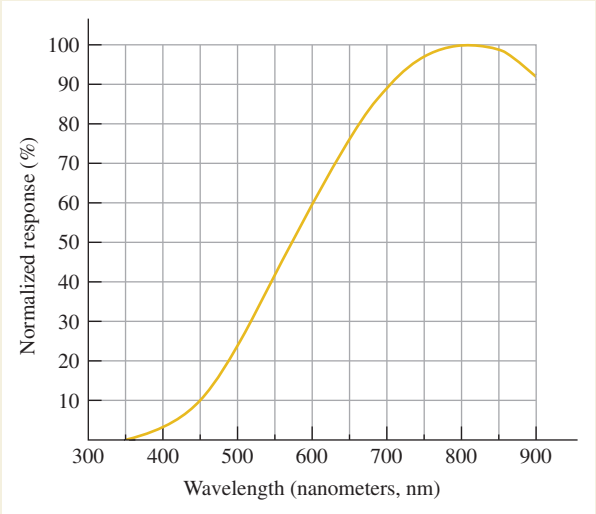

SUMMARY

- The op-amp has three terminals not including power and ground: inverting (−) input, noninverting (+) input, and output.
- Most op-amps require both a positive and a negative dc supply voltage.
- The ideal (perfect) op-amp has infinite input resistance, zero output resistance, infinite open-loop voltage gain, and infinite CMRR.
- A good practical op-amp has high input resistance, low output resistance, and high open-loop voltage gain.

www.EngineeringBooksPdf.com

- A diff-amp is normally used for the input stage of an op-amp.
- A differential input voltage appears between the inverting and noninverting inputs of a diff-amp.
- A single-ended input voltage appears between one input and ground (with the other inputs grounded).
- A differential output voltage appears between two output terminals of a diff-amp.
- A single-ended output voltage appears between the output and ground of a diff-amp.
- Common mode occurs when equal, in-phase voltages are applied to both input terminals.
- Input offset voltage produces an output error voltage (with no input voltage).
- Input bias current also produces an output error voltage (with no input voltage).
- Input offset current is the difference between the two bias currents.
- Open-loop voltage gain is the gain of the op-amp with no external feedback connections.
- Slew rate is the rate (in volts per microsecond) that the output voltage of an op-amp can change in response to a step input.
- Negative feedback occurs when a portion of the output voltage is connected back to the inverting input such that it subtracts from the input voltage, thus reducing the voltage gain but increasing the stability and bandwidth.
- There are two basic op-amp configurations: inverting and noninverting. The voltage-follower is a special case of a noninverting amplifier.
- All op-amp configurations employ negative feedback.
- A noninverting amplifier configuration has a higher input resistance and a lower output resistance than the op-amp itself (without feedback).
- An inverting amplifier configuration has an input resistance approximately equal to the input resistor R_i and an output resistance approximately equal to the internal output resistance of the op-amp itself.
- The voltage-follower has high input resistance and low output resistance.

KEY TERMS

Closed-loop voltage gain (A_{cl}) The overall voltage gain of an op-amp with negative feedback.

Common mode A condition characterized by the presence of identical signals on both op-amp inputs.

Common-mode rejection ratio (CMRR) A measure of a diff-amp's or an op-amp's ability to reject signals that appear the same on both inputs; the ratio of differential voltage gain or open-loop gain (for an op-amp) to common-mode gain.

Differential amplifier An amplifier that produces an output proportional to the difference of two inputs.

Differential mode A mode of op-amp operation in which two opposite-polarity signal voltages are applied to the two inputs.

Inverting amplifier An op-amp closed-loop configuration in which the input signal is applied to the inverting input.

Negative feedback The return of a portion of the output signal to the input such that it is out of phase with the input signal.

Noninverting amplifier An op-amp closed-loop configuration in which the input signal is applied to the noninverting input.

Open-loop gain (A_{ol}) The internal voltage gain of an op-amp without feedback.

Operational amplifier (op-amp) A special type of amplifier exhibiting very high open-loop gain, very high input resistance, very low output resistance, and good rejection of common-mode signals.

Single-ended mode A mode of op-amp operation in which a signal voltage is applied to only one input.

Voltage-follower A closed-loop, noninverting op-amp with a voltage gain of 1.

www.EngineeringBooksPdf.com

FORMULAS

1	$\text{CMRR} = \dfrac{A_{v(d)}}{A_{cm}}$	Common-mode rejection ratio (diff-amp)
2	$\text{CMRR} = 20\log\left(\dfrac{A_{v(d)}}{A_{cm}}\right)$	Common-mode rejection ratio (dB)
3	$I_{\text{BIAS}} = \dfrac{I_1 + I_2}{2}$	Input bias current
4	$I_{\text{OS}} = \lvert I_1 - I_2 \rvert$	Input offset current
5	$V_{\text{OS}} = I_{\text{OS}}R_{in}$	Offset voltage
6	$V_{\text{OUT(error)}} = A_v I_{\text{OS}} R_{in}$	Output error voltage
7	$\text{CMRR} = \dfrac{A_{ol}}{A_{cm}}$	Common-mode rejection ratio (op-amp)
8	$\text{CMRR} = 20\log\left(\dfrac{A_{ol}}{A_{cm}}\right)$	Common-mode rejection ratio (dB)
9	$\text{Slew rate} = \dfrac{\Delta V_{out}}{\Delta t}$	Slew rate
10	$A_{cl(\text{NI})} = 1 + \dfrac{R_f}{R_i}$	Voltage gain (noninverting)
11	$A_{cl(\text{VF})} = 1$	Voltage gain (voltage-follower)
12	$A_{cl(\text{I})} = -\dfrac{R_f}{R_i}$	Voltage gain (inverting)
13	$R_{in(\text{NI})} = (1 + A_{ol}B)R_{in}$	Input resistance (noninverting)
14	$R_{out(\text{NI})} = \dfrac{R_{out}}{1 + A_{ol}B}$	Output resistance (noninverting)
15	$R_{in(\text{VF})} = (1 + A_{ol})R_{in}$	Input resistance (voltage-follower)
16	$R_{out(\text{VF})} = \dfrac{R_{out}}{1 + A_{ol}}$	Output resistance (voltage-follower)
17	$R_{in(\text{I})} \cong R_i$	Input resistance (inverting)
18	$R_{out(\text{I})} = \dfrac{R_{out}}{1 + A_{ol}B}$	Output resistance (inverting)

TRUE/FALSE QUIZ

Answers are at the end of the chapter.

1. When a diff-amp has identical signals on both inputs, the signals are referred to as differential signals.
2. A high CMRR for a diff-amp means the common-mode gain is much larger than the differential gain.
3. The input bias current for an op-amp is the sum of the two currents entering the inputs.
4. The open-loop voltage gain of an op-amp is also referred to as the large signal voltage gain.
5. If the CMRR of an op-amp is very low, it will do a good job of rejecting common-mode noise.
6. When negative feedback is used, the bandwidth of an amplifier is increased.
7. In a voltage-follower, the open-loop and closed-loop gains are equal.
8. The input resistance of a noninverting amplifier is much higher than that of an inverting amplifier with equal gains.
9. Ideally, the output resistance of an amplifier is zero.
10. If the feedback resistor in an amplifier is open, there will be no signal at the output.

www.EngineeringBooksPdf.com

SELF-TEST

Answers are at the end of the chapter.

1. Which characteristic does not necessarily apply to an op-amp:
   (a) high gain **(b)** low power
   (c) high input resistance **(d)** low output resistance
2. In selecting an op-amp, suppose you have several choices. Of the CMRR values listed, the most desirable is
   (a) 10 dB **(b)** 20 dB **(c)** 50 dB **(d)** 100 dB
3. The output voltage of a particular op-amp increases 8 V in 12 μs in response to a step voltage on the input. The slew rate is
   (a) 0.667 V/μs **(b)** 1.5 V/μs **(c)** 96 V/μs **(d)** 0.75 V/μs
4. A noninverting op-amp configuration has an R_i of 1.0 kΩ and an R_f of 100 kΩ. If V_{out} is 5 V, the value of V_f is
   (a) 50 mV **(b)** 49.5 mV **(c)** 495 mV **(d)** 500 mV
5. In the amplifier described in Question 4, the value of B is
   (a) 0.01 **(b)** 0.1 **(c)** 0.0099 **(d)** 101
6. The closed-loop gain of the amplifier in Question 4 is
   (a) 0.0099 **(b)** 1 **(c)** 99 **(d)** 101
7. One characteristic of a voltage-follower is
   (a) $A_{cl} > 1$ **(b)** inversion **(c)** high R_{out} **(d)** noninversion
8. An inverting amplifier has the following circuit values: $R_f = 220$ kΩ, $R_i = 2.2$ kΩ, and $A_{ol} = 25{,}000$. The closed-loop gain is
   (a) -100 **(b)** -0.01 **(c)** 100 **(d)** -250
9. If you know an op-amp's open-loop gain and nothing else, you can determine the closed-loop gain of
   (a) an inverting amplifier
   (b) a noninverting amplifier
   (c) a voltage-follower
   (d) none of the amplifier configurations without additional information
10. The feedback attenuation of a voltage-follower is
    (a) unity **(b)** less than unity
    (c) greater than unity **(d)** variable
11. The value of B in a certain noninverting amplifier is 0.025. The closed-loop gain is
    (a) unity **(b)** 40 **(c)** 0.025 **(d)** undeterminable
12. The highest possible input resistance is achieved with the
    (a) inverting amplifier **(b)** noninverting amplifier
    (c) differential amplifier **(d)** voltage-follower

PROBLEMS

Answers to odd-numbered problems are at the end of the chapter.

BASIC PROBLEMS

SECTION 1 Introduction to the Operational Amplifier

1. Compare a practical op-amp to an ideal op-amp.
2. Two IC op-amps are available to you. Their characteristics are as follows:
   Op-amp 1: $R_{in} = 5$ MΩ, $R_{out} = 100\ \Omega$, $A_{ol} = 50{,}000$
   Op-amp 2: $R_{in} = 10$ MΩ, $R_{out} = 75\ \Omega$, $A_{ol} = 150{,}000$
   Choose the one you think is generally more desirable.

www.EngineeringBooksPdf.com

SECTION 2 The Differential Amplifier

3. Identify the type of input and output configuration for each diff-amp in Figure 35.

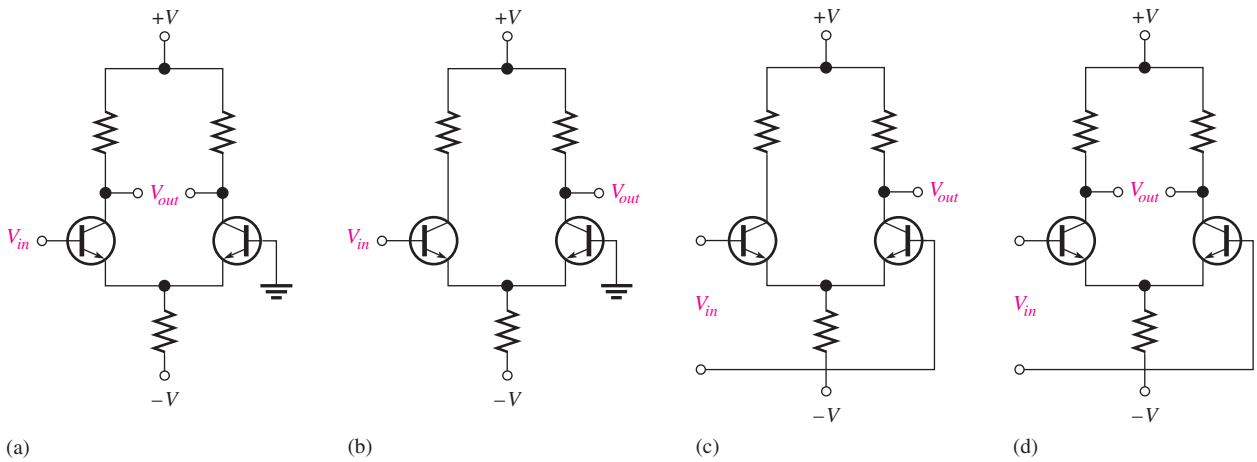

▲ FIGURE 35

4. The dc base voltages in Figure 36 are zero. Using your knowledge of transistor analysis, determine the dc differential output voltage. Assume that Q_1 has an $\alpha = 0.98$ and Q_2 has an $\alpha = 0.975$.

5. A certain diff-amp has a differential gain of 60 and a common-mode gain of 0.09. Determine the CMRR and express it in decibels.

6. A certain diff-amp has a CMRR of 65 dB. If the differential gain is 150, what is the common-mode gain?

▶ FIGURE 36

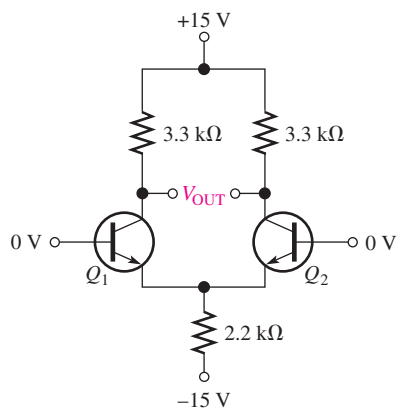

7. Identify the type of input mode for each op-amp in Figure 37.

8. Show the common-mode input in Figure 37 in an alternate way.

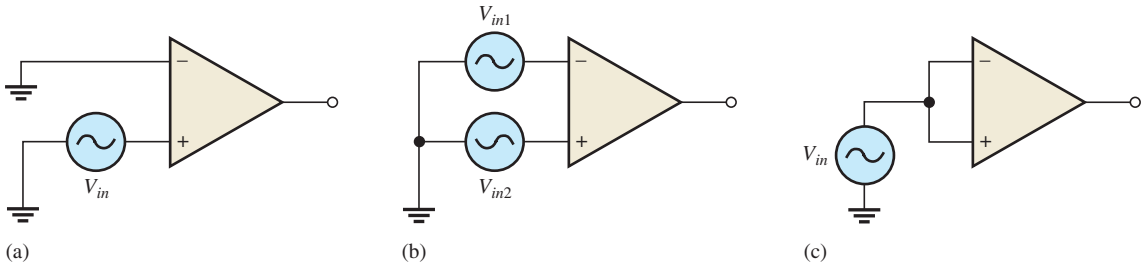

▲ FIGURE 37

www.EngineeringBooksPdf.com

SECTION 3 Op-Amp Parameters

9. Determine the bias current, I_{BIAS}, given that the input currents to an op-amp are 8.3 μA and 7.9 μA.

10. Distinguish between *input bias current* and *input offset current,* and then calculate the input offset current in Problem 9.

11. A certain op-amp has a CMRR of 250,000. Convert this to decibels.

12. The open-loop gain of a certain op-amp is 175,000. Its common-mode gain is 0.18. Determine the CMRR in decibels.

13. The op-amp data sheet specifies a CMRR of 300,000 and an A_{ol} of 90,000. What is the common-mode gain?

14. Figure 38 shows the output voltage of an op-amp in response to a step input. What is the slew rate?

▶ FIGURE 38

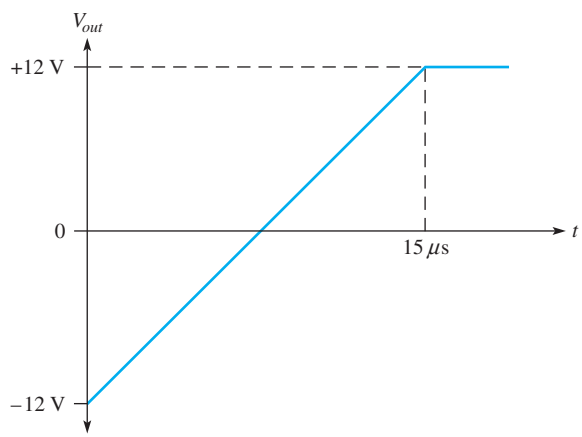

15. How long does it take the output voltage of an op-amp to go from −10 V to +10 V if the slew rate is 0.5 V/μs?

SECTION 5 Op-Amp Configurations with Negative Feedback

16. Identify each of the op-amp configurations in Figure 39.

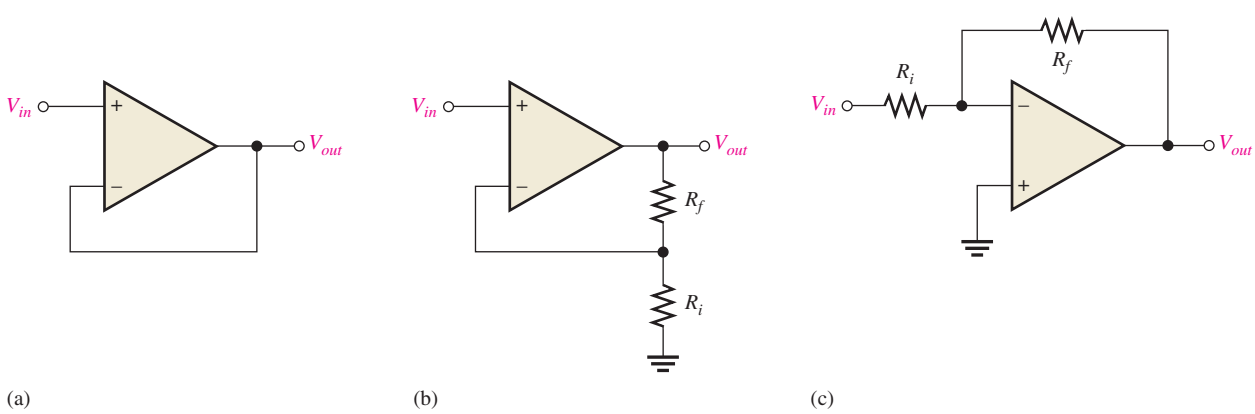

▲ FIGURE 39

www.EngineeringBooksPdf.com

17. For the amplifier in Figure 40, determine the following:

(a) $A_{cl(\mathrm{NI})}$ **(b)** V_{out} **(c)** V_f

▶ **FIGURE 40**

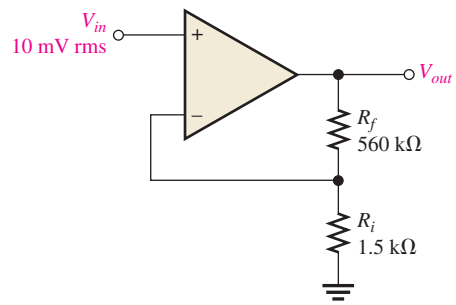

18. Determine the closed-loop gain of each amplifier in Figure 41.

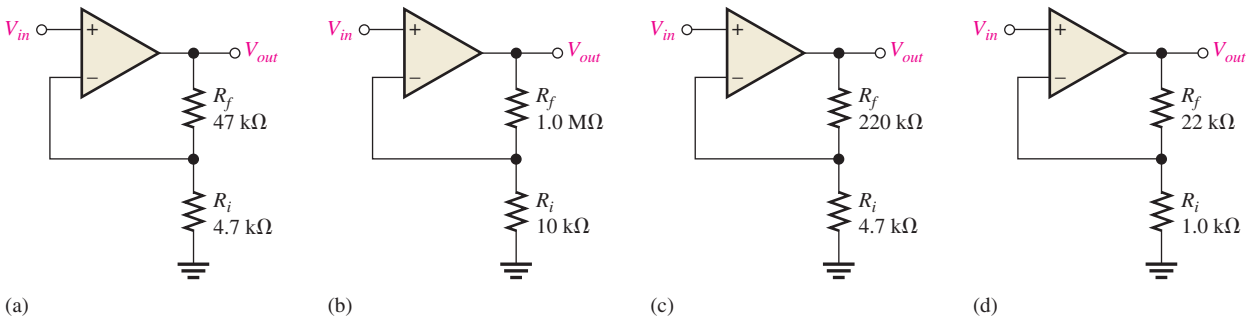

▲ **FIGURE 41**

19. Find the value of R_f that will produce the indicated closed-loop gain in each amplifier in Figure 42.

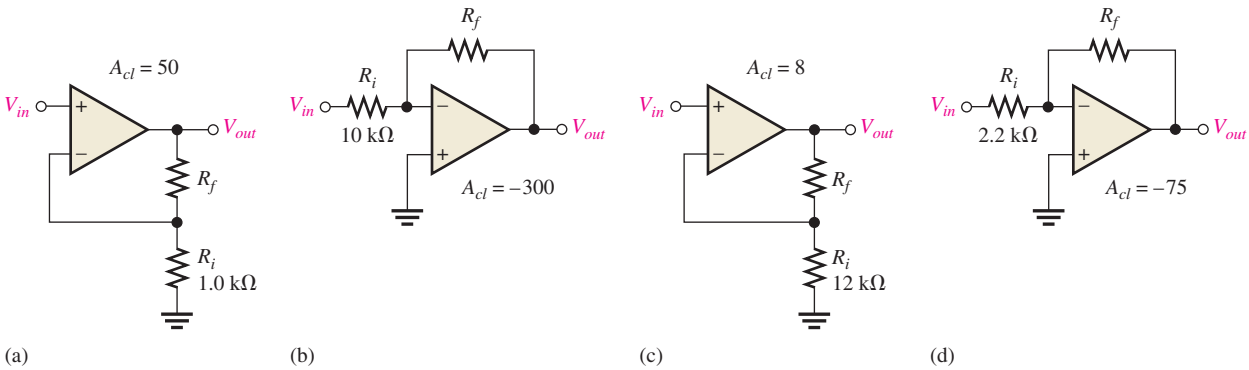

▲ **FIGURE 42**

www.EngineeringBooksPdf.com

20. Find the gain of each amplifier in Figure 43.

21. If a signal voltage of 10 mV rms is applied to each amplifier in Figure 43, what are the output voltages and what is their phase relationship with inputs?

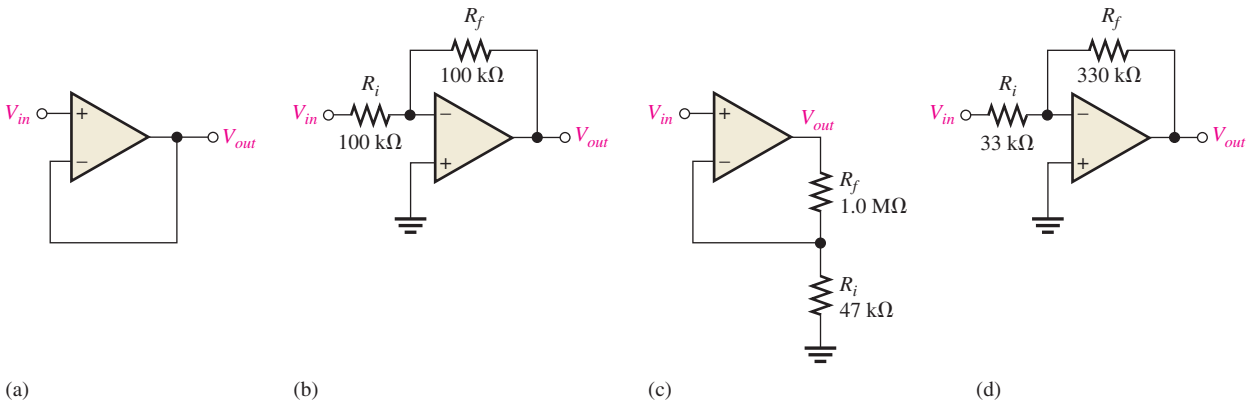

▲ FIGURE 43

22. Determine the approximate values for each of the following quantities in Figure 44:

(a) I_{in} **(b)** I_f **(c)** V_{out} **(d)** closed-loop gain

▶ FIGURE 44

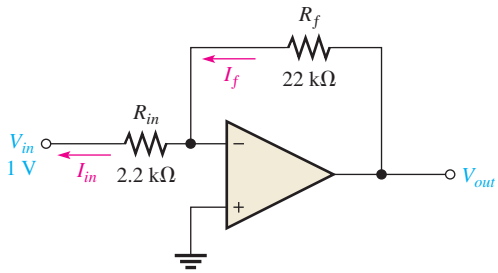

SECTION 6 Op-Amp Resistances

23. Determine the input and output resistances for each amplifier configuration in Figure 45.

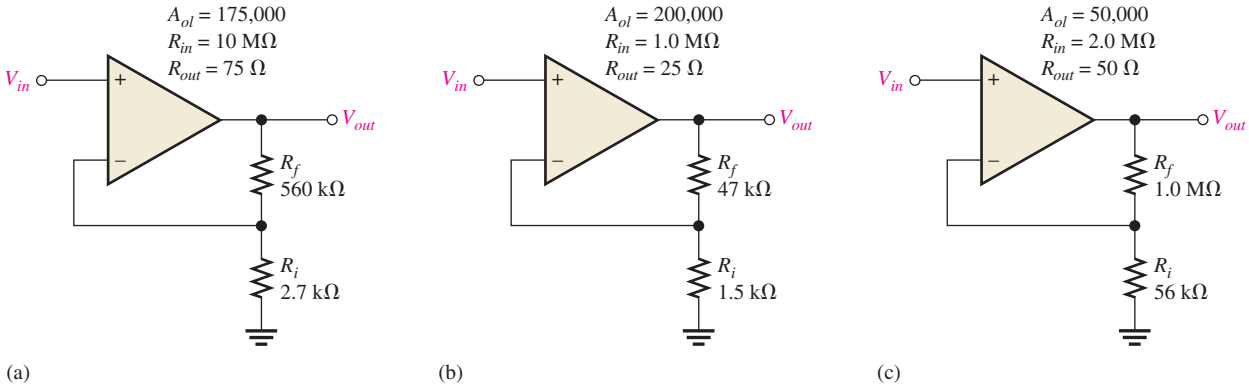

▲ FIGURE 45

www.EngineeringBooksPdf.com

24. Repeat Problem 23 for each circuit in Figure 46.

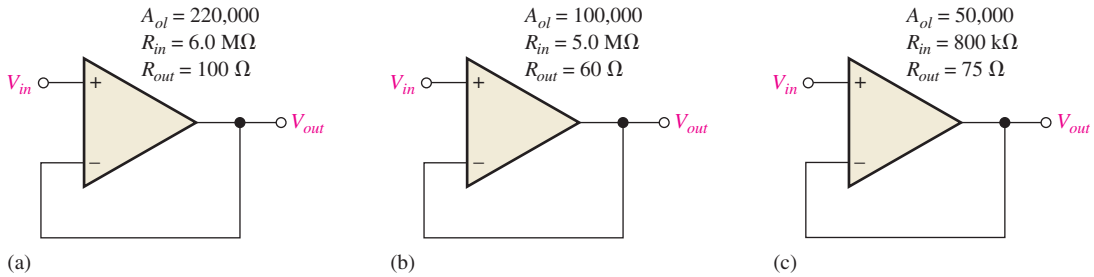

▲ FIGURE 46

25. Repeat Problem 23 for each circuit in Figure 47.

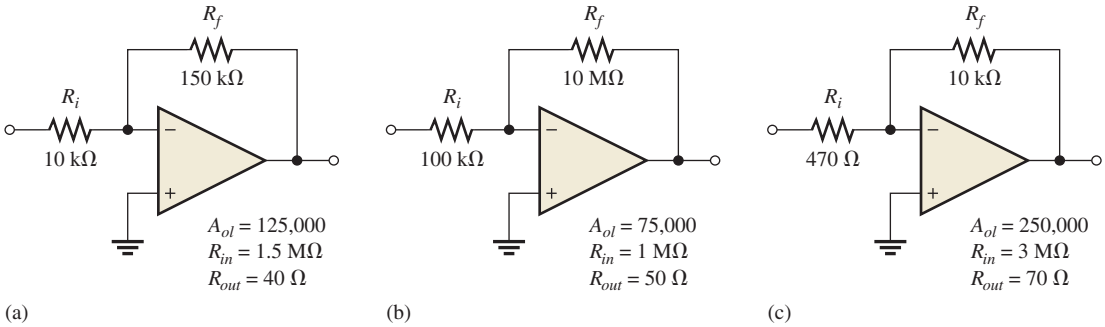

▲ FIGURE 47

SECTION 7 Troubleshooting

26. Determine the most likely fault(s) for each of the following symptoms in Figure 48 with a 100 mV signal applied.

(a) No output signal

(b) Output severely clipped on both positive and negative swings

(c) Clipping on only positive peaks when input signal is increased to a certain point

▶ FIGURE 48

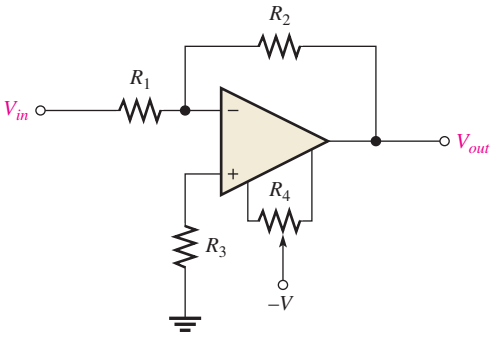

27. On the circuit board in Figure 33, what happens if the middle lead (wiper) of the 100 kΩ potentiometer is broken (open)?

www.EngineeringBooksPdf.com

MULTISIM TROUBLESHOOTING PROBLEMS

28. Open file P18-28; files are found at www.pearsonhighered.com/floyd/. Determine if there is a fault. If so, identify it.

29. Open file P18-29 and determine if there is a fault. If so, identify it.

30. Open file P18-30 and determine if there is a fault. If so, identify it.

31. Open file P18-31 and determine if there is a fault. If so, identify it.

32. Open file P18-32 and determine if there is a fault. If so, identify it.

ANSWERS

SECTION REVIEWS

SECTION 1 Introduction to the Operational Amplifier

1. See Figure 49.

▶ FIGURE 49

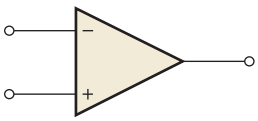

2. Infinite R_{in}, zero R_{out}, infinite voltage gain

3. High R_{in}, low R_{out}, high voltage gain

4. Differential amplifier, voltage amplifier, push-pull amplifier

SECTION 2 The Differential Amplifier

1. Differential input is between two input terminals; single-ended input is from one input terminal to ground (with the other inputs grounded).

2. Common-mode rejection is the ability of an op-amp to reject common-mode signals.

3. A higher CMRR results in a lower A_{cm}.

SECTION 3 Op-Amp Parameters

1. Op-amp parameters are input bias current, input offset voltage, drift, input offset current, input resistance, output resistance, common-mode input voltage range, CMRR, open-loop voltage gain, slew rate, and frequency response.

2. Slew rate and voltage gain are frequency-dependent parameters.

3. Input bias current is the average of the two currents required to operate the input stage; input offset current is the absolute difference in these two currents.

4. A high CMRR is better at rejecting undesired common-mode inputs.

5. V/μs

SECTION 4 Negative Feedback

1. Negative feedback provides a stable controlled voltage gain, control of input and output resistances, and wider bandwidth.

2. The open-loop gain is so high that a very small signal on the input will drive the op-amp into saturation.

3. Both inputs will be the same.

SECTION 5 Op-Amp Configurations with Negative Feedback

1. Negative feedback stabilizes gain.

2. False

3. $A_{cl} = 1/B = 50$

4. 100 mV

5. 0 V

www.EngineeringBooksPdf.com

SECTION 6 Op-Amp Resistances

1. R_{in} of the noninverting amplifier is higher than that of the op-amp itself.
2. The voltage-follower configuration increases R_{in}.
3. $R_{in(I)} = 2\ k\Omega$; $R_{out(I)} = 60\ \Omega$

SECTION 7 Troubleshooting

1. Check the output null adjustment.
2. No dc power supplies, output grounded, or faulty op-amp

RELATED PROBLEMS FOR EXAMPLES

1 34,000; 90.6 dB

2 **(a)** 0.168

(b) 88 dB

(c) 2.1 V rms, 4.2 V rms

(d) 16.8 mV

3 12,649

4 20 V/μs

5 32.9

6 **(a)** 67.5 kΩ

(b) The amplifier would have an open-loop gain, producing a square wave output.

7 **(a)** 20.6 GΩ, 14 mΩ

(b) 23

8 R_{in} increases; R_{out} decreases.

9 $R_{in(I)} = 560\ \Omega$; $R_{out(I)} = 110\ m\Omega$; $A_{cl} = -146$

TRUE/FALSE QUIZ

1. F **2.** F **3.** F **4.** T **5.** F **6.** T **7.** F **8.** T **9.** T **10.** F

SELF-TEST

1. (b) **2.** (d) **3.** (a) **4.** (b) **5.** (c) **6.** (d)
7. (d) **8.** (a) **9.** (c) **10.** (a) **11.** (b) **12.** (d)

PROBLEMS – ODD-NUMBERED ANSWERS

1. *Practical op-amp:* High open-loop gain, high input impedance, low output impedance, high CMRR

Ideal op-amp: Infinite open-loop gain, infinite input impedance, zero output impedance, infinite CMRR

3. **(a)** Single-ended input, differential output

(b) Single-ended input, single-ended output

(c) Differential input, single-ended output

(d) Differential input, differential output

5. 56.5 dB

7. **(a)** Single-ended mode

(b) Differential mode

(c) Common mode

9. 8.1 μA

11. 108 dB

www.EngineeringBooksPdf.com

13. 0.3

15. 40 μs

17. **(a)** 374 **(b)** 3.74 V **(c)** 10 mV

19. **(a)** 49 kΩ **(b)** 3 MΩ
(c) 84 kΩ **(d)** 165 kΩ

21. **(a)** 10 mV, in-phase
(b) −10 mV, 180° out-of-phase
(c) 223 mV, in-phase
(d) −100 mV, 180° out-of-phase

23. **(a)** $Z_{in(\mathrm{NI})} = 8410\ \mathrm{M\Omega}, Z_{out(\mathrm{NI})} = 89.2\ \mathrm{m\Omega}$
(b) $Z_{in(\mathrm{NI})} = 6181\ \mathrm{M\Omega}, Z_{out(\mathrm{NI})} = 4.04\ \mathrm{m\Omega}$
(c) $Z_{in(\mathrm{NI})} = 5302\ \mathrm{M\Omega}, Z_{out(\mathrm{NI})} = 18.9\ \mathrm{m\Omega}$

25. **(a)** $Z_{in(\mathrm{I})} = 10\ \mathrm{k\Omega}, Z_{out(\mathrm{I})} = 5.12\ \mathrm{m\Omega}$
(b) $Z_{in(\mathrm{I})} = 100\ \mathrm{k\Omega}, Z_{out(\mathrm{I})} = 67.2\ \mathrm{m\Omega}$
(c) $Z_{in(\mathrm{I})} = 470\ \Omega, Z_{out(\mathrm{I})} = 6.24\ \mathrm{m\Omega}$

27. A_{cl} increases to 100.

29. R_1 is open.

31. Op-amp faulty

PHOTO CREDITS FOR REOCCURRING IMAGES

CD Icon: Stockbyte/Getty Images; **Computer Chips:** Photodisc/Thinkstock; **Computer:** Jeff Maloney/Photodisc/Getty Images; **Fiber Optic:** discpicture/Shutterstock.

www.EngineeringBooksPdf.com

This page intentionally left blank

www.EngineeringBooksPdf.com

Basic Op-Amp Circuits

CHAPTER OUTLINE

1 Comparators
2 Summing Amplifiers
3 Integrators and Differentiators
4 Oscillators
5 Active Filters
6 Voltage Regulators
Application Assignment: Putting Your Knowledge to Work

CHAPTER OBJECTIVES

- Explain the basic operation of a comparator circuit
- Analyze summing amplifiers, averaging amplifiers, and scaling amplifiers
- Explain the operation of op-amp integrators and differentiators
- Discuss the operation of several types of op-amp oscillators
- Recognize and evaluate basic op-amp filters
- Describe the operation of basic series and shunt voltage regulators

KEY TERMS

- Comparator
- Summing amplifier
- Averaging amplifier
- Scaling adder
- Integrator
- Differentiator
- Wien-bridge oscillator
- Triangular-wave oscillator
- Relaxation oscillator
- Active filter
- Series regulator
- Shunt regulator

APPLICATION ASSIGNMENT PREVIEW

A faulty FM stereo receiver is the topic of this application assignment. After a preliminary check, you decide that the dual-polarity power supply that provides ± 12 V to all the op-amps in both channels of the receiver is faulty. The power supply uses positive and negative integrated circuit voltage regulators. After studying this chapter, you should be able to complete the application assignment.

VISIT THE COMPANION WEBSITE

Study aids for this chapter are available at http://www.pearsonhighered.com/floyd/

INTRODUCTION

Op-amps are used in such a wide variety of applications that it is impossible to cover all of them in one chapter or even in one book. Therefore, in this chapter we examine some of the more fundamental applications to illustrate the versatility of the op-amp and to give you a foundation in basic op-amp circuits.

Op-amp circuits are generally implemented using ICs. However, programmable devices are also available, called field-programmable analog arrays (FPAAs), in which most op-amp circuits can be implemented using software.

Streeter Photography/Alamy

From Chapter 19 of *Electronics Fundamentals: Circuits, Devices, and Applications*, Eighth Edition, Thomas L. Floyd, David M. Buchla. Copyright © 2010 by Pearson Education, Inc. Published by Pearson Prentice Hall. All rights reserved.

www.EngineeringBooksPdf.com

1 COMPARATORS

Operational amplifiers are often used to compare the amplitude of one voltage with another. In this application, the op-amp is used in the open-loop configuration, with the input voltage on one input and a reference voltage on the other.

After completing this section, you should be able to

- **Explain the basic operation of a comparator circuit**
  - Discuss zero-level detection
  - Discuss nonzero-level detection

A **comparator** is a circuit that can determine if an input voltage exceeds a certain level. General-purpose op-amps can be used for this function in noncritical applications because of the high open-loop gain. When an op-amp is used as a comparator, there is no negative feedback; and the op-amp output will be saturated in one of two states (usually a positive or negative voltage). A very small positive or negative input voltage will drive the op-amp into one of its saturated states. For example, consider a general-purpose op-amp with an open-loop gain of 100,000. A signal of only $+150\ \mu V$ is enough to drive the op-amp into saturation $(+150\ \mu V)(100{,}000) = +15\ V$ (which is typically saturation).

For many applications, special integrated circuit comparators are selected because they have features optimized for the comparison function. Comparators are specialized op-amps designed with low bias current and fast switching times (as little as 5 ns). Low bias current is an important specification for comparators because bias current can cause switching points to change if the current is in external resistors. Comparators often have other built-in features, such as hysteresis (two switching points) with an external pin to control the thresholds. Another feature found on many comparators is a very stable internal reference voltage that is compensated for temperature variations. Some comparators provide two opposite-polarity outputs. Although general-purpose op-amps can be used as comparators for noncritical applications, you should normally not use a dedicated comparator as an op-amp.

Zero-Level Detection

One application for a comparator is a zero-level detector as shown in Figure 1(a). Notice that the inverting input is grounded and will serve as a 0 V reference. The signal is applied

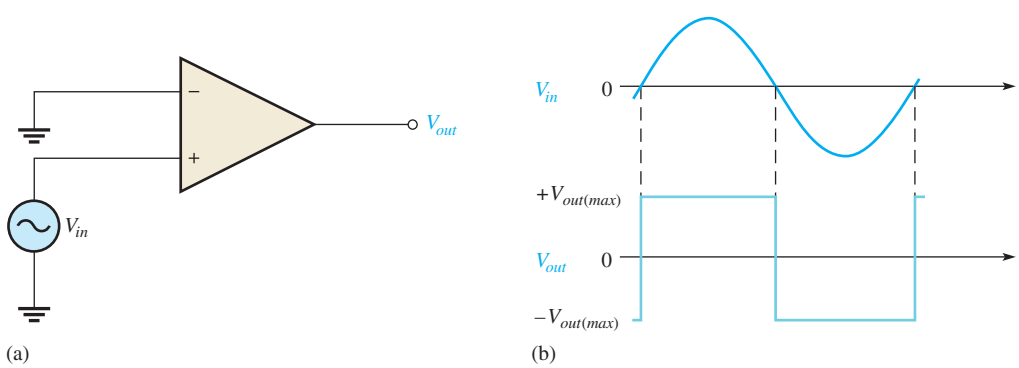

▲ FIGURE 1

The op-amp as a zero-level detector.

This icon indicates selected websites for further information on topics in this section. See the Companion Website provided with this text.

www.EngineeringBooksPdf.com

to the noninverting input. As the input signal crosses the 0 V reference point, the output suddenly switches from one saturated state to the other.

Figure 1(b) shows the result of a sinusoidal input voltage applied to the noninverting input of the zero-level detector. When the sine wave is negative, the output is at its maximum negative level. When the sine wave crosses 0, the amplifier is driven to its opposite state and the output goes to its maximum positive level, as shown.

As you can see, the zero-level detector can be used as a squaring circuit to produce a square wave from a sine wave.

Nonzero-Level Detection

The zero-level detector in Figure 1 can be modified to detect voltages other than zero by connecting a fixed reference voltage to the inverting (−) input, as shown in Figure 2(a). A more practical arrangement is shown in part (b) using a voltage divider to set the reference voltage as follows:

$$V_{REF} = \frac{R_2}{R_1 + R_2}(+V) \qquad \text{Equation 1}$$

where $+V$ is the positive op-amp supply voltage. As long as the input voltage (V_{in}) is less than V_{REF}, the output remains at the maximum negative level. When the input voltage exceeds the reference voltage, the output goes to its maximum positive state, as shown in Figure 2(c) with a sinusoidal input voltage.

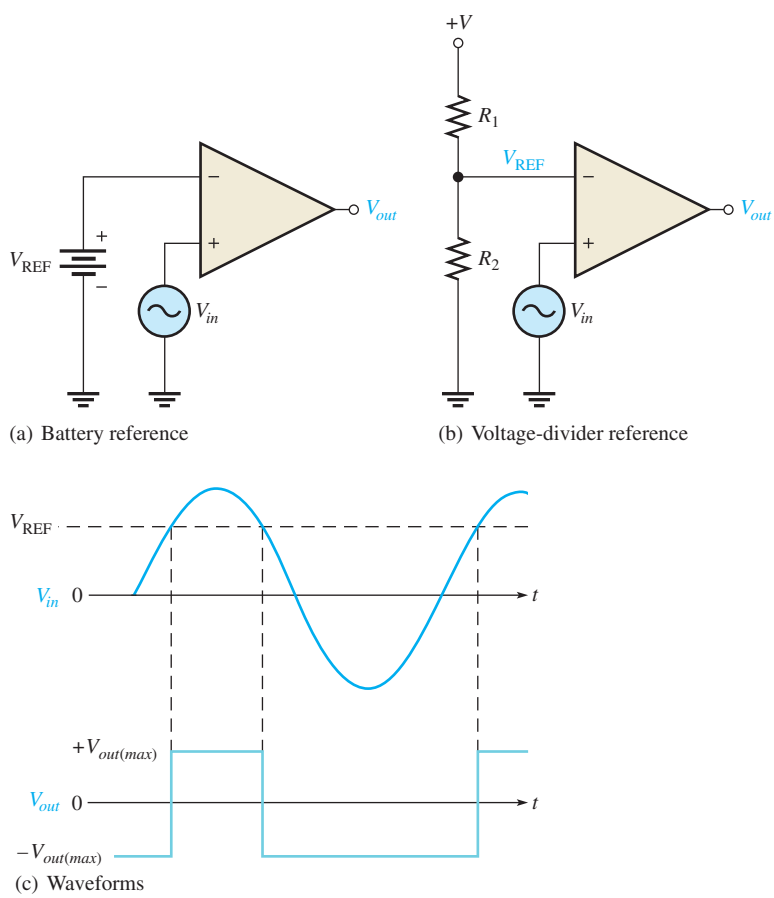

▲ FIGURE 2

Nonzero-level detectors.

www.EngineeringBooksPdf.com

EXAMPLE 1

The input signal in Figure 3(a) is applied to the comparator circuit in part (b). Draw the output showing its proper relationship to the input signal. Assume that the maximum output levels of the op-amp are ± 12 V.

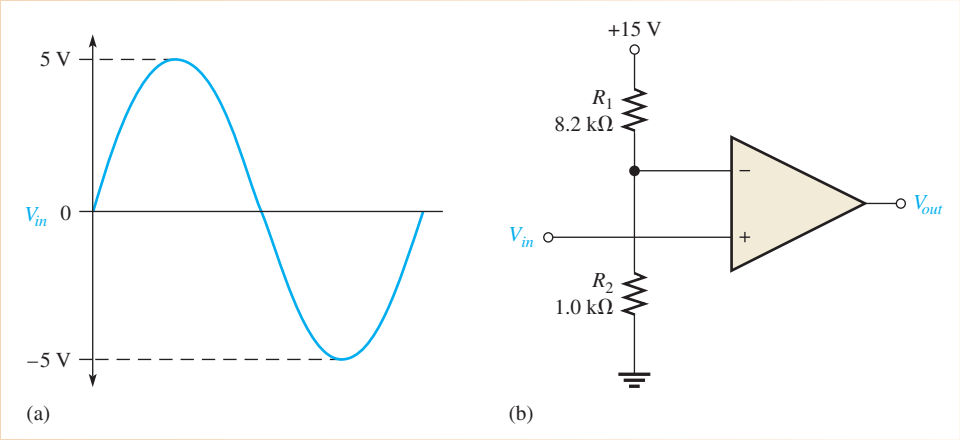

▲ FIGURE 3

Solution The reference voltage is set by R_1 and R_2.

$$V_{REF} = \frac{R_2}{R_1 + R_2}(+V) = \frac{1.0\text{ k}\Omega}{8.2\text{ k}\Omega + 1.0\text{ k}\Omega}(+15\text{ V}) = 1.63\text{ V}$$

As shown in Figure 4, each time the input exceeds +1.63 V, the output voltage switches to its +12 V level, and each time the input goes below +1.63 V, the output switches back to its −12 V level.

▶ FIGURE 4

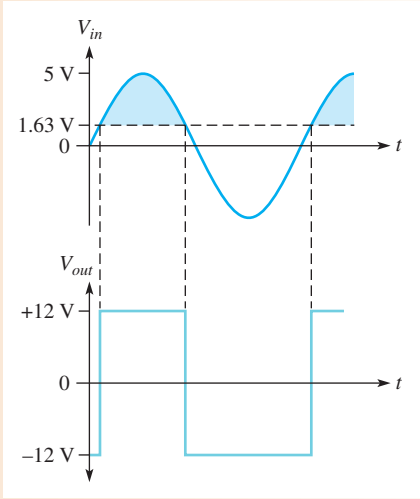

*Related Problem** Determine the reference voltage in Figure 3 if $R_1 = 22\text{ k}\Omega$ and $R_2 = 3.3\text{ k}\Omega$.

Open Multisim file E19-01; files are found at www.pearsonhighered.com/floyd/. Measure the output voltage waveform and determine if it matches the waveform in Figure 4.

*Answers are at the end of the chapter.

www.EngineeringBooksPdf.com

SECTION 1 CHECKUP
Answers are at the end of the chapter.

1. Name two specifications that are important for comparators.
2. What is the reference voltage for the comparator in Figure 5?
3. Draw the output waveform for Figure 5 when a sine wave with a 5 V peak is applied to the input.

▶ FIGURE 5

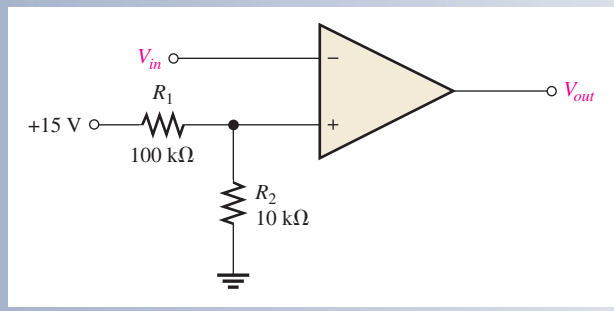

2 SUMMING AMPLIFIERS

The summing amplifier is a variation of the inverting op-amp configuration. The **summing amplifier** has two or more inputs, and its output voltage is proportional to the negative of the algebraic sum of its input voltages. The averaging amplifier and the scaling amplifier are variations of the basic summing amplifier.

After completing this section, you should be able to

- **Analyze summing amplifiers, averaging amplifiers, and scaling amplifiers**
  - Calculate summing amplifier output voltage for given inputs for both unity gain and nonunity gain conditions
  - Calculate the output voltage for an averaging amplifier
  - Calculate the output voltage for a scaling adder
  - Explain how a scaling adder can be used in a digital-to-analog converter

Figure 6 shows a two-input summing amplifier. Two voltages, V_{IN1} and V_{IN2}, are applied to the inputs and produce currents I_1 and I_2, as shown. Using the concepts of infinite input impedance and virtual ground, you can see that the inverting input of the op-amp is approximately 0 V, and there is no current from the input. Therefore, the total current, which is the sum of I_1 and I_2, is through R_f.

$$I_T = I_1 + I_2$$

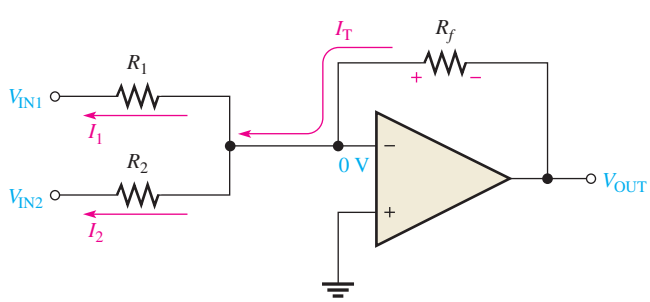

◀ FIGURE 6
Two-input, inverting summing amplifier.

www.EngineeringBooksPdf.com

Since $V_{OUT} = -I_T R_f$,

$$V_{OUT} = -(I_1 + I_2)R_f = -\left(\frac{V_{IN1}}{R_1} + \frac{V_{IN2}}{R_2}\right)R_f$$

If all three of the resistors are equal ($R_1 = R_2 = R_f = R$), then

$$V_{OUT} = -\left(\frac{V_{IN1}}{R} + \frac{V_{IN2}}{R}\right)R = -(V_{IN1} + V_{IN2})$$

This shows that the output voltage is the negative sum of the two input voltages. A general expression is given in Equation 2 for a summing amplifier with n inputs, as shown in Figure 7, where all the resistors are equal in value.

Equation 2

$$\boldsymbol{V_{OUT} = -(V_{IN1} + V_{IN2} + V_{IN3} + \cdots + V_{INn})}$$

▶ **FIGURE 7**

Summing amplifier with n inputs.

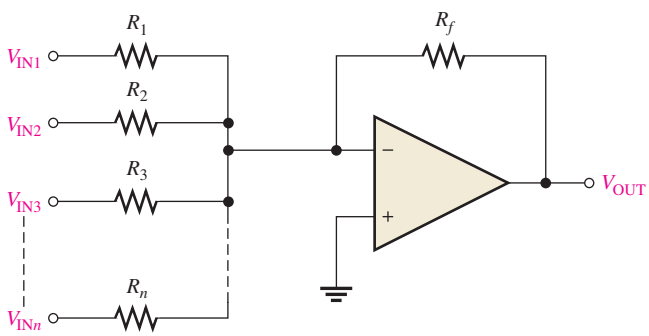

EXAMPLE 2

Determine the output voltage in Figure 8.

▶ **FIGURE 8**

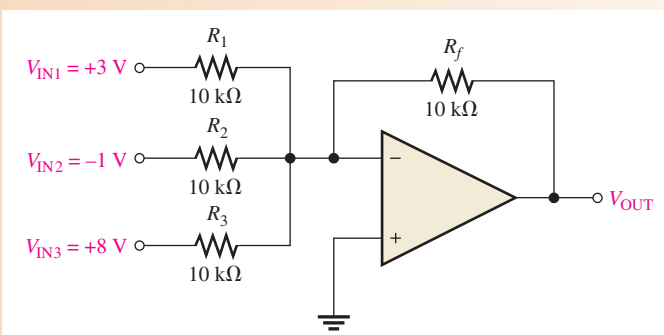

Solution

$$V_{OUT} = -(V_{IN1} + V_{IN2} + V_{IN3}) = -(3\text{ V} - 1\text{ V} + 8\text{ V}) = \mathbf{-10\text{ V}}$$

Related Problem

If a fourth input of +0.5 V is added to Figure 8 with a 10 kΩ resistor, what is the output voltage?

Open Multisim file E19-02. Measure the output voltage and verify that it is the sum of the input voltages.

Summing Amplifier with Gain Greater Than Unity

When R_f is larger than the input resistors, the amplifier has a gain of R_f/R, where R is the value of each input resistor. The general expression for the output is

Equation 3

$$\boldsymbol{V_{OUT} = -\frac{R_f}{R}(V_{IN1} + V_{IN2} + \cdots + V_{INn})}$$

www.EngineeringBooksPdf.com

As you can see, the output is the negative sum of all the input voltages multiplied by a constant determined by the ratio R_f/R.

EXAMPLE 3

Determine the output voltage for the summing amplifier in Figure 9.

▶ **FIGURE 9**

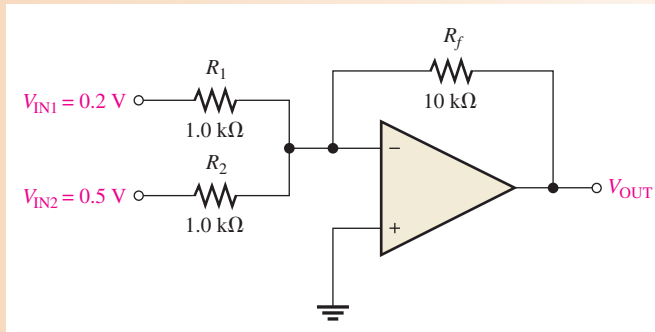

Solution $R_f = 10\text{ k}\Omega$ and $R = R_1 = R_2 = 1.0\text{ k}\Omega$. Therefore,

$$V_{OUT} = -\frac{R_f}{R}(V_{IN1} + V_{IN2}) = -\frac{10\text{ k}\Omega}{1.0\text{ k}\Omega}(0.2\text{ V} + 0.5\text{ V}) = -10(0.7\text{ V}) = \mathbf{-7\text{ V}}$$

Related Problem Determine the output voltage in Figure 9 if the two input resistors are 2.2 kΩ and the feedback resistor is 18 kΩ.

Open Multisim file E19-03. Measure the output voltage and verify that it matches the calculated value.

Averaging Amplifier

An **averaging amplifier**, which is a variation of a summing amplifier, can produce the negative value of the mathematical average of the input voltages. This is done by setting the ratio R_f/R equal to the reciprocal of the number of inputs. You know that the average of several numbers is obtained by first adding the numbers and then dividing by the quantity of numbers you have. Examination of Equation 3 and a little thought will convince you that a summing amplifier will do the same. Example 4 will illustrate.

EXAMPLE 4

Show that the amplifier in Figure 10 produces an output whose magnitude is the average of the input voltages.

▶ **FIGURE 10**

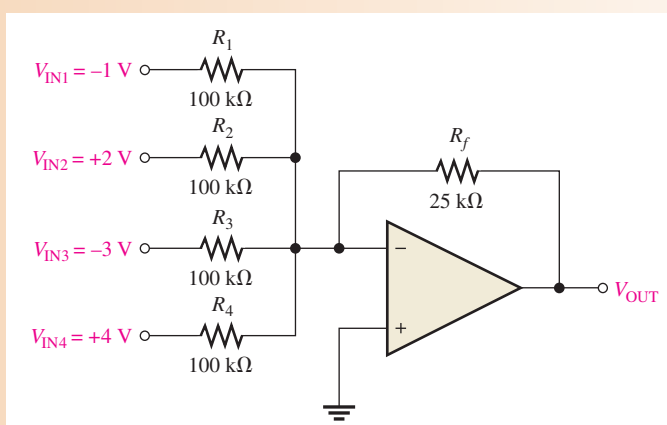

www.EngineeringBooksPdf.com

Solution Since the input resistors are equal, $R = 100\ \text{k}\Omega$. The output voltage is

$$V_{OUT} = -\frac{R_f}{R}(V_{IN1} + V_{IN2} + V_{IN3} + V_{IN4})$$

$$= -\frac{25\ \text{k}\Omega}{100\ \text{k}\Omega}(-1\ \text{V} + 2\ \text{V} - 3\ \text{V} + 4\ \text{V}) = -\frac{1}{4}(2\ \text{V}) = \mathbf{-0.5\ V}$$

A simple calculation shows that the average of the four input values is the same as V_{OUT} but of opposite sign.

$$V_{IN(avg)} = \frac{-1\ \text{V} + 2\ \text{V} - 3\ \text{V} + 4\ \text{V}}{4} = \frac{2\ \text{V}}{4} = 0.5\ \text{V}$$

Related Problem Specify the changes required in the averaging amplifier in Figure 10 in order to handle five inputs.

Open Multisim file E19-04. Measure the output voltage and verify that it is the average of the input voltages.

Scaling Adder

A different weight can be assigned to each input of a summing amplifier, forming a **scaling adder** by simply adjusting the values of the input resistors. As you have seen, the output voltage can be expressed as

Equation 4

$$V_{OUT} = -\left(\frac{R_f}{R_1}V_{IN1} + \frac{R_f}{R_2}V_{IN2} + \cdots + \frac{R_f}{R_n}V_{INn}\right)$$

The weight of a particular input is set by the ratio of R_f to the resistance for that input. For example, if an input voltage is to have a weight of 1, then $R = R_f$. Or, if a weight of 0.5 is required, $R = 2R_f$. The smaller the value of the input resistance R, the greater the weight, and vice versa.

EXAMPLE 5

For the scaling adder in Figure 11, determine the weight of each input voltage and find the output voltage.

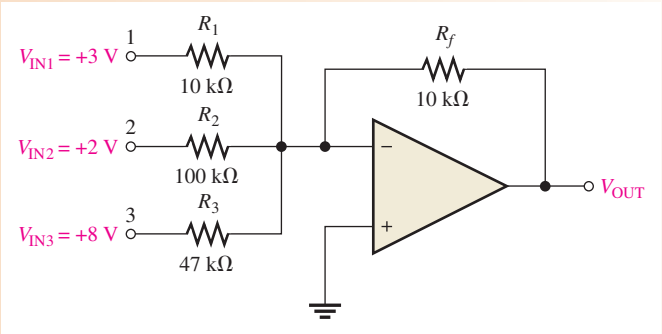

▲ FIGURE 11

www.EngineeringBooksPdf.com

Solution Weight of input 1: $\frac{R_f}{R_1} = \frac{10\text{ k}\Omega}{10\text{ k}\Omega} = \mathbf{1}$

Weight of input 2: $\frac{R_f}{R_2} = \frac{10\text{ k}\Omega}{100\text{ k}\Omega} = \mathbf{0.1}$

Weight of input 3: $\frac{R_f}{R_3} = \frac{10\text{ k}\Omega}{47\text{ k}\Omega} = \mathbf{0.213}$

The output voltage is

$$V_{OUT} = -\left(\frac{R_f}{R_1}V_{IN1} + \frac{R_f}{R_2}V_{IN2} + \frac{R_f}{R_3}V_{IN3}\right) = -[1(3\text{ V}) + 0.1(2\text{ V}) + 0.213(8\text{ V})]$$
$$= -(3\text{ V} + 0.2\text{ V} + 1.7\text{ V}) = \mathbf{-4.9\text{ V}}$$

Related Problem Determine the weight of each input voltage in Figure 11 if $R_1 = 22\text{ k}\Omega$, $R_2 = 82\text{ k}\Omega$, $R_3 = 56\text{ k}\Omega$, and $R_f = 10\text{ k}\Omega$. Also find V_{OUT}.

Open Multisim file E19-05. Measure the output voltage and compare to the calculated value.

SECTION 2 CHECKUP

1. Define *summing point.*
2. What is the value of R_f/R for a five-input averaging amplifier?
3. A certain scaling adder has two inputs, one having twice the weight of the other. If the resistor value for the lower weighted input is 10 kΩ, what is the value of the other input resistor?

3 INTEGRATORS AND DIFFERENTIATORS

An op-amp **integrator** simulates mathematical integration, which is basically a summing process that determines the total area under the curve of a function. An op-amp **differentiator** simulates mathematical differentiation, which is a process of determining the instantaneous rate of change of a function. The integrators and differentiators shown in this section are idealized to show basic principles. Practical integrators often have an additional resistor or other circuitry in parallel with the feedback capacitor to prevent saturation. Practical differentiators may include a series resistor to reduce high frequency noise.

After completing this section, you should be able to

- **Explain the operation of op-amp integrators and differentiators**
  - Recognize an integrator
  - Determine the rate of change of the integrator output voltage
  - Recognize a differentiator
  - Determine the differentiator output voltage

www.EngineeringBooksPdf.com

The Op-Amp Integrator

An ideal integrator is shown in Figure 12. Notice that the feedback element is a capacitor that forms an *RC* circuit with the input resistor. Although a large-value resistor is normally used in parallel with the capacitor to limit the gain at low frequencies, it does not affect the basic operation and is not shown for purposes of this analysis.

▶ FIGURE 12

An ideal op-amp integrator.

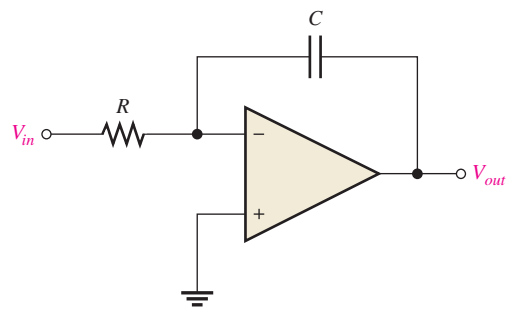

How a Capacitor Charges To understand how the integrator works, it is important to review how a capacitor charges. Recall that the charge, *Q,* on a capacitor is proportional to the charging current and the time.

$$Q = I_C t$$

Also, in terms of the voltage, the charge on a capacitor is

$$Q = CV_C$$

From these two relationships, the capacitor voltage can be expressed as

$$V_C = \left(\frac{I_C}{C}\right)t$$

This expression has the form of an equation for a straight line beginning at zero with a constant slope of I_C/C. Remember from algebra that the general formula for a straight line is $y = mx + b$. In this case, $y = V_C$, $m = I_C/C$, $x = t$, and $b = 0$.

Recall that the capacitor voltage in a simple *RC* circuit is exponential, not linear. This is because the charging current continuously decreases as the capacitor charges and causes the rate of change of the voltage to continuously decrease. The key thing about using an op-amp with an *RC* circuit to form an integrator is that the capacitor's charging current is made constant, thus producing a straight-line (linear) voltage rather than an exponential voltage. Now let's see why this is true.

In Figure 13, the inverting input of the op-amp is at virtual ground (0 V), so the voltage across R_i equals V_{in}. Therefore, the input current is

$$I_{in} = \frac{V_{in}}{R_i}$$

▶ FIGURE 13

Currents in an integrator.

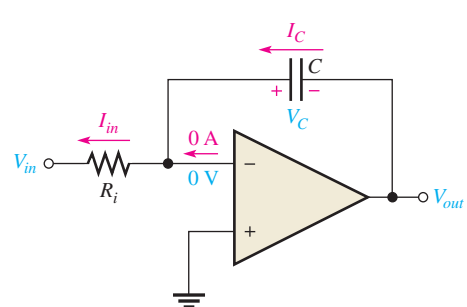

www.EngineeringBooksPdf.com

If V_{in} is a constant voltage, then I_{in} is also a constant because the inverting input always remains at 0 V, keeping a constant voltage across R_i. Because of the very high input impedance of the op-amp, there is negligible current from the inverting input. All of the input current is through the capacitor, as indicated in Figure 13, so

$$I_C = I_{in}$$

The Capacitor Voltage Since I_{in} is constant, so is I_C. The constant I_C charges the capacitor linearly and produces a linear voltage across C. The positive side of the capacitor is held at 0 V by the virtual ground of the op-amp. The voltage on the negative side of the capacitor decreases linearly from zero as the capacitor charges, as shown in Figure 14. This voltage is called a *negative ramp.*

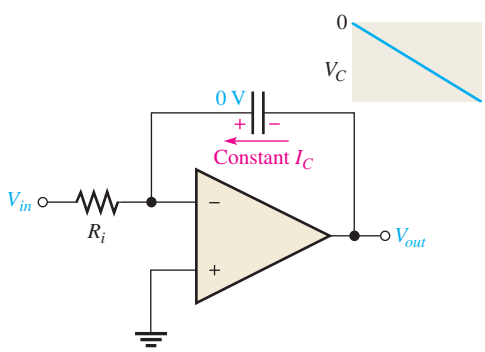

FIGURE 14

A linear ramp voltage is produced across C by the constant charging current.

The Output Voltage V_{out} is the same as the voltage on the negative side of the capacitor. When a constant input voltage in the form of a step or pulse (a pulse has a constant amplitude when high) is applied, the output ramp decreases negatively until the op-amp saturates at its maximum negative level. This is indicated in Figure 15.

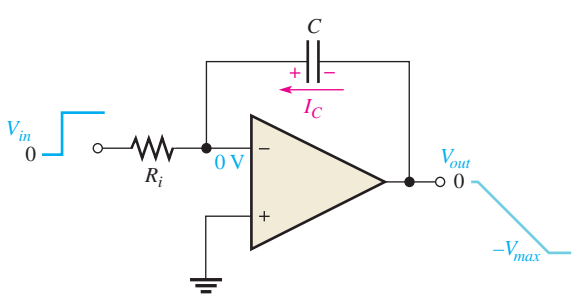

FIGURE 15

A constant input voltage produces a ramp on the output.

Rate of Change of the Output The rate at which the capacitor charges, and therefore the slope of the output ramp, is set by the ratio I_C/C, as you have seen. Since $I_C = V_{in}/R_i$, the rate of change or slope of the integrator's output voltage is $\Delta V_{out}/\Delta t$.

$$\frac{\Delta V_{out}}{\Delta t} = -\frac{V_{in}}{R_i C} \qquad \text{Equation 5}$$

EXAMPLE 6

Figure 16 shows a practical integrator using a feedback resistor to prevent the op-amp from saturating due to small imbalances in the capacitor charging and discharging current. The feedback resistor has only a small effect on the circuit and is selected to have about 7% of the charging current, so its effect on the general circuit operation is

www.EngineeringBooksPdf.com

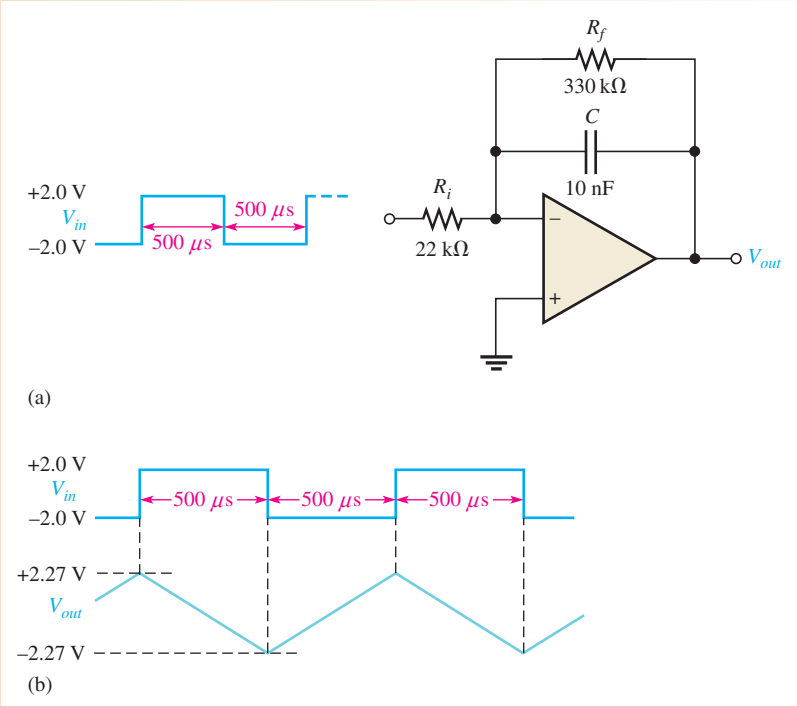

▲ FIGURE 16

negligible. However, the feedback resistor will force the output to be centered about the zero line after several cycles.

(a) Calculate the rate of change of the output voltage during the time the capacitor is charging.

(b) Calculate the total change in voltage.

(c) Describe the output and draw the waveform (centered about 0 V).

Solution

(a) $$\frac{\Delta V_{out}}{\Delta t} = -\frac{V_{in}}{R_iC} = -\frac{2.0\text{ V}}{(22\text{ k}\Omega)(10\text{ nF})} = -9.09\text{ kV/s} = \mathbf{-9.09\text{ mV}/\mu\text{s}}$$

(b) In 500 μs, the output will change by $(-9.09\text{ mV}/\mu\text{s})(500\ \mu\text{s}) = \mathbf{4.54\text{ V}}$, producing a negative-going ramp.

(c) When the capacitor discharges, the rate is the same except it produces a positive-going ramp. Because the output is centered about 0 V (after a few cycles), the output will vary from a minimum of $-\frac{1}{2}(4.54\text{ V}) = -2.27$ V to a maximum of $\frac{1}{2}(4.54\text{ V}) = +2.27$ V. The waveform is shown in Figure 16(b).

Related Problem What happens to the output waveform if the input resistor is increased to 33 kΩ?

Open Multisim file E19-06. Observe the output voltage waveform and compare to the waveform in Figure 16(b).

www.EngineeringBooksPdf.com

The Op-Amp Differentiator

An ideal differentiator is shown in Figure 17. Notice how the placement of the capacitor and resistor differs from their placement in the integrator. The capacitor is now the input element. A differentiator produces an inverted output that is proportional to the rate of change of the input voltage. Although a small-value resistor is normally used in series with the capacitor to limit the gain at high frequencies, it does not affect the basic operation and is not shown for purposes of this analysis.

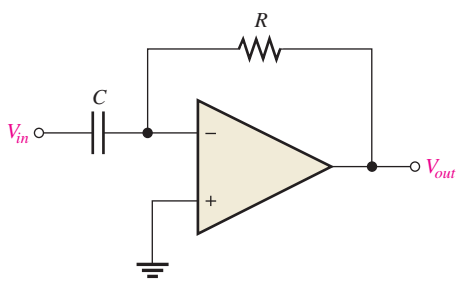

▲ FIGURE 17

An ideal op-amp differentiator.

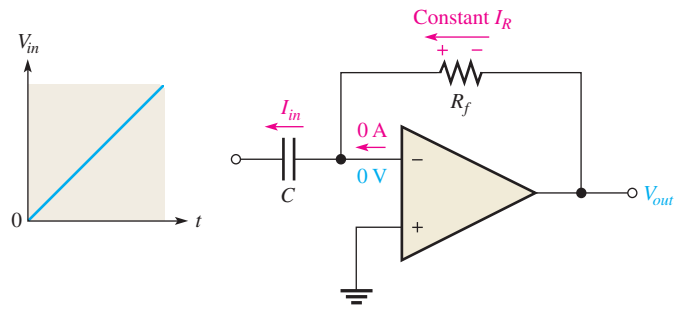

▲ FIGURE 18

A differentiator with a ramp input.

To see how the differentiator works, let's apply a positive-going ramp voltage to the input as indicated in Figure 18. In this case, $I_C = I_{in}$ and the voltage across the capacitor is equal to V_{in} at all times ($V_C = V_{in}$) because of virtual ground on the inverting input.

From the basic formula, $V_C = (I_C/C)t$, the capacitor current is

$$I_C = \left(\frac{V_C}{t}\right)C$$

Since the current at the inverting input is negligible, $I_R = I_C$. Both currents are constant because the slope of the capacitor voltage (V_C/t) is constant. The output voltage is also constant and equal to the voltage across R_f because one side of the feedback resistor is always 0 V (virtual ground).

$$V_{out} = I_R R_f = I_C R_f$$

$$\boldsymbol{V_{out} = -\left(\frac{V_C}{t}\right)R_f C} \qquad \text{Equation 6}$$

The output is negative when the input is a positive-going ramp and positive when the input is a negative-going ramp, as illustrated in Figure 19. During this positive slope of the input, the capacitor is charging from the input source and the constant current through the

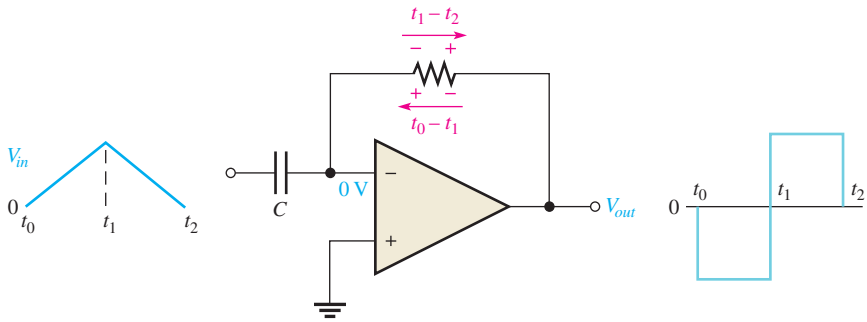

◀ FIGURE 19

Output of a differentiator with a series of positive and negative ramps (triangle wave) on the input.

www.EngineeringBooksPdf.com

feedback resistor is in the direction shown. During the negative slope of the input, the current is in the opposite direction because the capacitor is discharging.

Notice in Equation 6 that the term V_C/t is the slope of the input. If the slope increases, V_{out} increases. If the slope decreases, V_{out} decreases. So, the output voltage is proportional to the slope (rate of change) of the input. The constant of proportionality is the time constant, R_fC.

EXAMPLE 7

Figure 20 shows a practical differentiator circuit with a series resistor on the input to limit high-frequency gain (reducing noise and ringing). This resistor has a negligible effect on the general circuit operation. The input waveform is taken from the output of the integrator in Example 6. Draw the output waveform.

▶ FIGURE 20

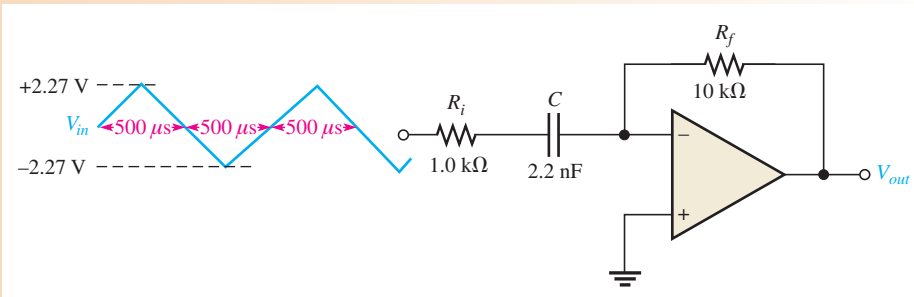

Solution The time constant is

$$R_fC = (10\,\text{k}\Omega)(2.2\,\text{nF}) = 22\,\mu\text{s}$$

The slope of the input is $-9.09\,\text{mV}/\mu\text{s}$ (from Example 6). During the rising input, the output is

$$V_{out} = -\left(\frac{V_C}{t}\right)R_fC = -(9.09\,\text{mV}/\mu\text{s})(22\,\mu\text{s}) = -200\,\text{mV}$$

When the input changes to a negative-going ramp, the output will have the same magnitude but is positive.

$$V_{out} = -\left(\frac{V_C}{t}\right)R_fC = -(-9.09\,\text{mV}/\mu\text{s})(22\,\mu\text{s}) = +200\,\text{mV}$$

Figure 21 shows the input and output waveforms.

▶ FIGURE 21

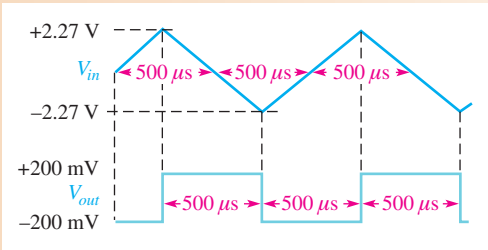

Related Problem What happens to the output waveform if the input capacitor is twice the capacitance?

Open Multisim file E19-07. Notice that the integrator from Example 6 and the differentiator from this example are combined. View the waveforms and compare them with the calculated values in these two examples. Test what happens when you reduce the series input resistor on the differentiator circuit.

www.EngineeringBooksPdf.com

SECTION 3 CHECKUP

1. What is the feedback element in an op-amp integrator?
2. For a constant input voltage to an integrator, why is the voltage across the capacitor linear?
3. How does a practical integrator circuit differ from an ideal integrator circuit?
4. What is the feedback element in an op-amp differentiator?
5. How is the output of a differentiator related to the input?
6. How does a practical differentiator circuit differ from an ideal differentiator circuit?

4 OSCILLATORS

Feedback oscillators can be implemented with op-amps.

After completing this section, you should be able to

- **Discuss the operation of several types of op-amp oscillators**
  - Identify a Wien-bridge oscillator and analyze its operation
  - Identify a triangular-wave oscillator and analyze its operation
  - Identify a relaxation oscillator and analyze its operation

The Wien-Bridge Oscillator

The **Wien-bridge oscillator** is an electronic oscillator that can produce low distortion sine waves over a wide range of frequencies. A fundamental part of the Wien-bridge oscillator is a lead-lag circuit like that shown in Figure 22(a). R_1 and C_1 together form the lag portion of the circuit; R_2 and C_2 form the lead portion. The operation of this circuit is as follows. At lower frequencies, the lead circuit dominates due to the high reactance of C_2. As the frequency increases, X_{C2} decreases, thus allowing the output voltage to increase. At some specified frequency, the response of the lag circuit takes over, and the decreasing value of X_{C1} causes the output voltage to decrease.

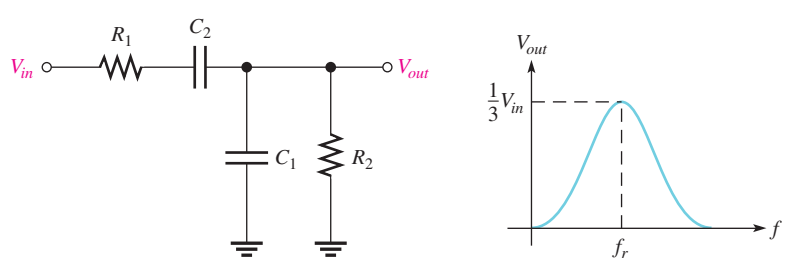

(a) Circuit (b) Response curve

FIGURE 22

A lead-lag circuit and its response curve.

The response curve for the lead-lag circuit shown in Figure 22(b) indicates that the output voltage peaks at a frequency f_r. At this point, the attenuation (V_{out}/V_{in}) of the circuit is ⅓ if $R_1 = R_2$ and $X_{C1} = X_{C2}$ as stated by the following equation:

$$\frac{V_{out}}{V_{in}} = \frac{1}{3}$$ **Equation 7**

www.EngineeringBooksPdf.com

The formula for the resonant frequency is

Equation 8

$$f_r = \frac{1}{2\pi RC}$$

To summarize, the lead-lag circuit has a resonant frequency, f_r, at which the phase shift through the circuit is 0° and the attenuation is ⅓. Below f_r, the lead circuit dominates and the output leads the input. Above f_r, the lag circuit dominates and the output lags the input.

The Basic Circuit The lead-lag circuit is used in the positive feedback loop of an op-amp, as shown in Figure 23(a). A voltage divider is used in the negative feedback loop. The Wien-bridge oscillator circuit can be viewed as a noninverting amplifier configuration with the input signal fed back from the output through the lead-lag circuit. Recall that the closed-loop gain of the amplifier is determined by the voltage divider.

$$A_{cl} = \frac{1}{B} = \frac{1}{R_2/(R_1 + R_2)} = \frac{R_1 + R_2}{R_2}$$

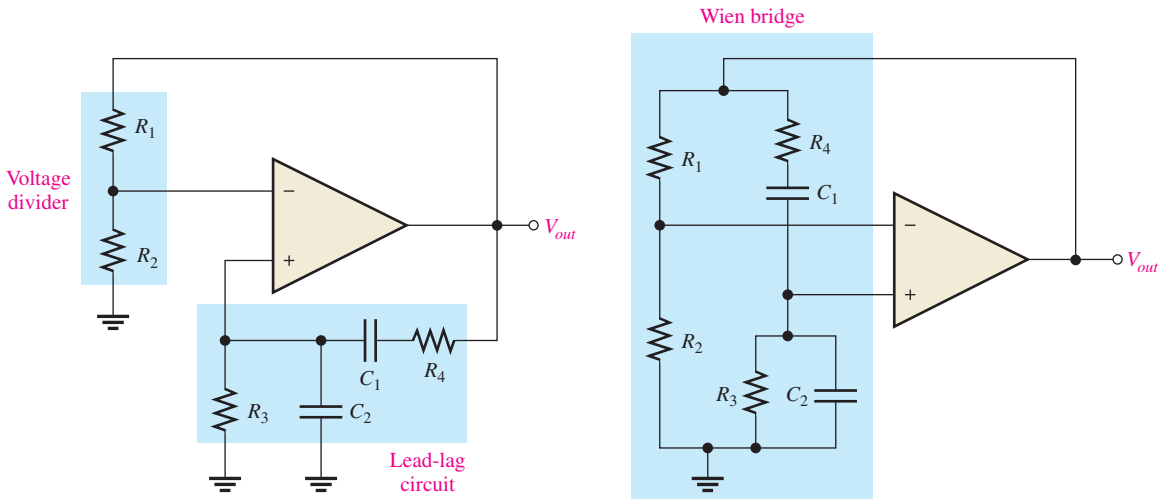

(a)

(b) Wien-bridge circuit combines a voltage divider and a lead-lag circuit

▲ **FIGURE 23**

The Wien-bridge oscillator schematic shown in two equivalent forms.

The circuit is redrawn in Figure 23(b) to show that the op-amp is connected across the bridge circuit. One leg of the bridge is the lead-lag circuit, and the other is the voltage divider.

Positive Feedback Conditions for Oscillation As you know, for the circuit to produce a sustained sinusoidal output (oscillate), the phase shift around the positive feedback loop must be 0° and the gain around the loop must be unity (1). The 0° phase-shift condition is met when the frequency is f_r because the phase shift through the lead-lag circuit is 0° and there is no inversion from the noninverting (+) input of the op-amp to the output. This is shown in Figure 24(a).

The unity-gain condition in the feedback loop is met when

$$A_{cl} = 3$$

This offsets the ⅓ attenuation of the lead-lag circuit, thus making the total gain around the positive feedback loop equal to 1, as depicted in Figure 24(b). To achieve a closed-loop gain of 3,

$$R_1 = 2R_2$$

www.EngineeringBooksPdf.com

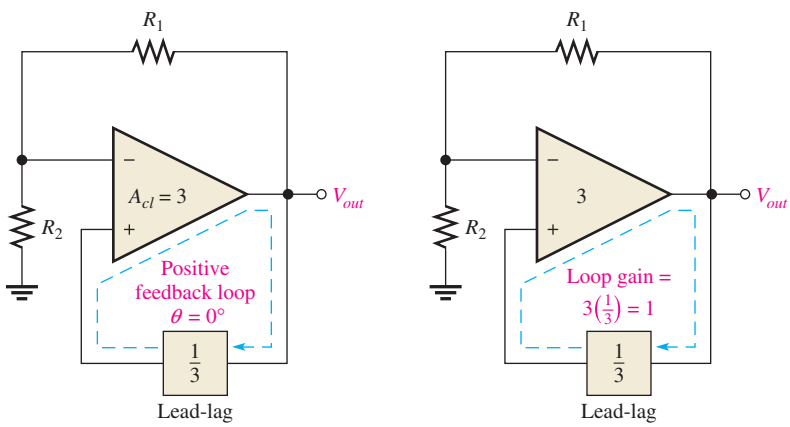

(a) The phase shift around the loop is 0°. (b) The voltage gain around the loop is 1.

▲ **FIGURE 24**

Conditions for oscillation in the Wien-bridge circuit.

Then

$$A_{cl} = \frac{R_1 + R_2}{R_2} = \frac{2R_2 + R_2}{R_2} = \frac{3R_2}{R_2} = 3$$

Start-Up Conditions Initially, the closed-loop gain of the amplifier itself must be more than three ($A_{cl} > 3$) until the output signal builds up to a desired level. The gain of the amplifier must then decrease to 3 so that the total gain around the loop is 1 and the output signal stays at the desired level, thus sustaining oscillation. This is illustrated in Figure 25.

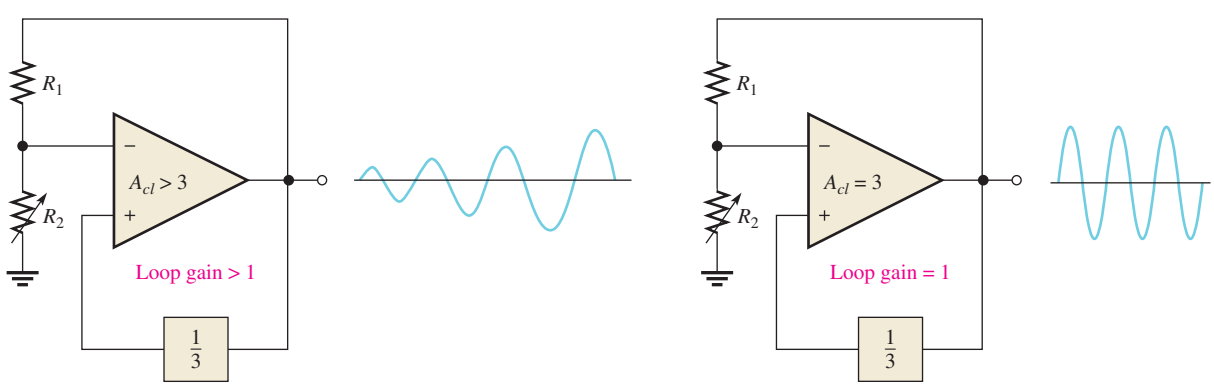

(a) Initially, loop gain greater than 1 causes output to build up. (b) Loop gain of 1 causes a sustained constant output.

▲ **FIGURE 25**

Oscillator start-up conditions.

A JFET stabilized Wien-bridge oscillator is shown in Figure 26. The gain of the op-amp is controlled by the components shown in the blue box, which include the JFET. The JFET's drain-source resistance depends on the gate voltage. With no output signal, the gate is at zero volts, causing the drain-source resistance to be at the minimum. With this condition, the loop gain is greater than 1. Oscillations begin and rapidly build to a large output signal. Negative excursions of the output signal forward-bias D_1, causing capacitor C_3 to charge to a negative voltage. This voltage increases the drain-source resistance of the JFET and reduces the gain (and hence the output). This is classic negative feedback at work. With the proper selection of components, the gain can be stabilized at the required level.

www.EngineeringBooksPdf.com

▶ FIGURE 26

Self-starting Wien-bridge oscillator using a JFET in the negative feedback loop.

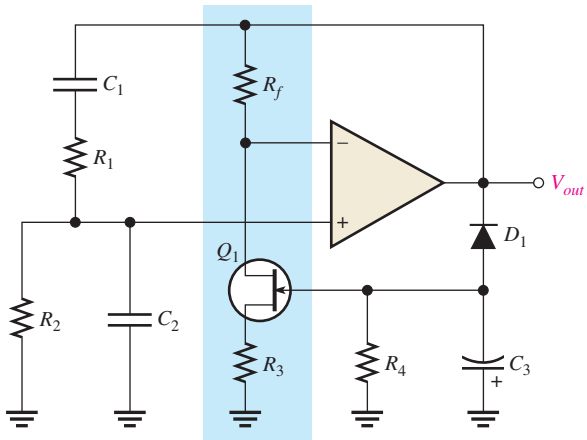

EXAMPLE 8

Determine the frequency of oscillation for the JFET stabilized Wien-bridge oscillator in Figure 27.

▶ FIGURE 27

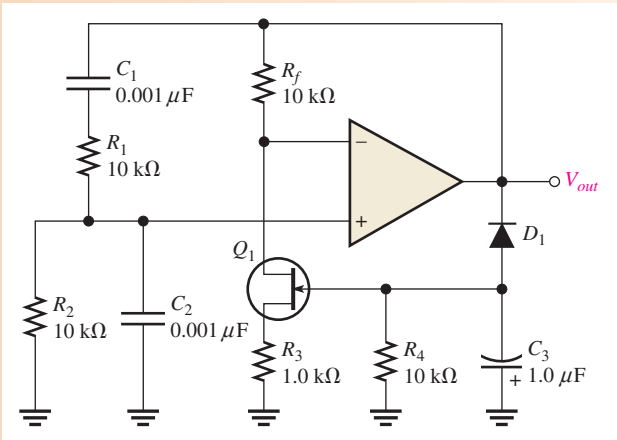

Solution For the lead-lag circuit, $R_1 = R_2 = R = 10\,\text{k}\Omega$ and $C_1 = C_2 = C = 0.001\,\mu\text{F}$. The resonant frequency is

$$f_r = \frac{1}{2\pi RC} = \frac{1}{2\pi(10\,\text{k}\Omega)(0.001\,\mu\text{F})} = \mathbf{15.9\,kHz}$$

Related Problem If C_1 and C_2 are changed to 0.01 μF, what is the frequency of oscillation in Figure 27?

A Triangular-Wave Oscillator

A **triangular-wave oscillator** is an electronic oscillator that uses a comparator with two trip points and an integrator to produce triangular waves. A practical implementation is shown in Figure 28. The operation is as follows. To begin, assume that the output voltage of the comparator is at its maximum negative level. This output is connected to the inverting input of the integrator through R_1, producing a positive-going ramp on the output of the integrator. When the ramp voltage reaches the upper trigger point (UTP), the

www.EngineeringBooksPdf.com

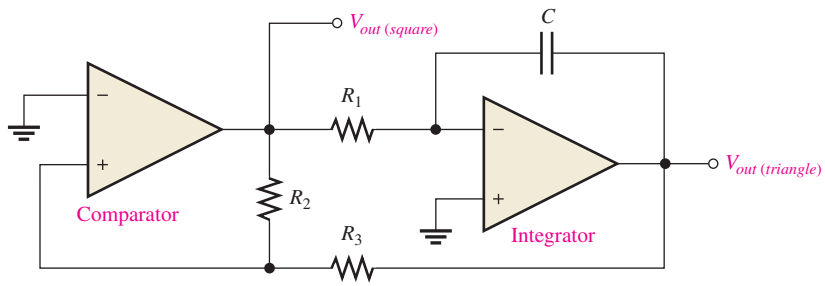

▲ FIGURE 28

A triangular-wave oscillator using two op-amps.

comparator switches to its maximum positive level. This positive level causes the integrator ramp to change to a negative-going direction. The ramp continues in this direction until the lower trigger point (LTP) of the comparator is reached. At this point, the comparator output switches back to the maximum negative level and the cycle repeats. This action is illustrated in Figure 29.

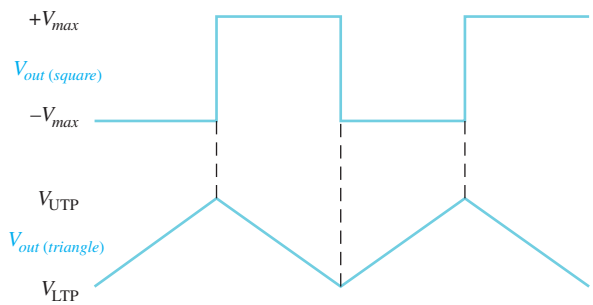

▲ FIGURE 29

Waveforms for the circuit in Figure 28.

Since the comparator produces a square-wave output, the circuit in Figure 28 can be used as both a triangular-wave oscillator and a square-wave oscillator. Devices of this type are commonly known as *function generators* because they produce more than one output function. The output amplitude of the square wave is set by the output swing of the comparator, and the resistors R_2 and R_3 set the amplitude of the triangular output by establishing the UTP and LTP voltages according to the following formulas:

$$V_{UTP} = +V_{max}\left(\frac{R_3}{R_2}\right) \qquad \text{Equation 9}$$

$$V_{LTP} = -V_{max}\left(\frac{R_3}{R_2}\right) \qquad \text{Equation 10}$$

where the comparator output levels, $+V_{max}$ and $-V_{max}$, are equal. The frequency of both waveforms depends on the R_1C time constant as well as the amplitude-setting resistors, R_2 and R_3. By varying R_1, the frequency of oscillation can be adjusted without changing the output amplitude.

$$f = \frac{1}{4R_1C}\left(\frac{R_2}{R_3}\right) \qquad \text{Equation 11}$$

www.EngineeringBooksPdf.com

EXAMPLE 9

Determine the frequency of the circuit in Figure 30. What is the frequency if R_1 is changed to 20 kΩ?

▶ **FIGURE 30**

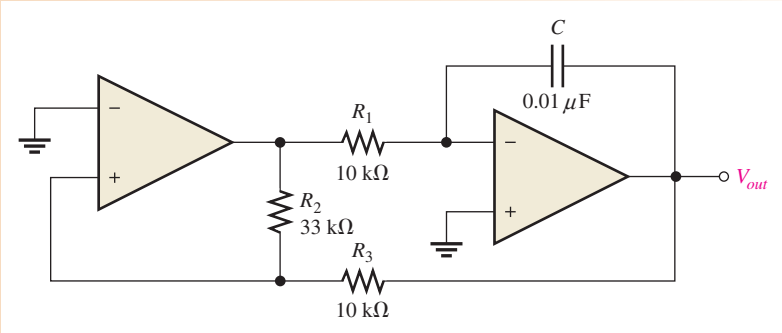

Solution

$$f = \frac{1}{4R_1C}\left(\frac{R_2}{R_3}\right) = \left(\frac{1}{4(10\text{ k}\Omega)(0.01\ \mu\text{F})}\right)\left(\frac{33\text{ k}\Omega}{10\text{ k}\Omega}\right) = \mathbf{8.25\ kHz}$$

If R_1 is 20 kΩ,

$$f = \frac{1}{4R_1C}\left(\frac{R_2}{R_3}\right) = \left(\frac{1}{4(20\text{ k}\Omega)(0.01\ \mu\text{F})}\right)\left(\frac{33\text{ k}\Omega}{12\text{ k}\Omega}\right) = \mathbf{4.13\ kHz}$$

Related Problem What is the amplitude of the triangular wave in Figure 30 if the comparator output is ±10 V?

Open the Multisim file E19-09. Observe the waveforms from the comparator and from the integrator.

A Square-Wave Relaxation Oscillator

The basic square-wave oscillator shown in Figure 31 is a type of **relaxation oscillator** because its operation is based on the charging and discharging of a capacitor. Notice that the op-amp's inverting input is the capacitor voltage and the noninverting input is a portion of the output fed back through resistors R_2 and R_3. When the circuit is first turned on, the capacitor is uncharged, and thus the inverting input is at 0 V. This makes the output a

▶ **FIGURE 31**

A square-wave relaxation oscillator.

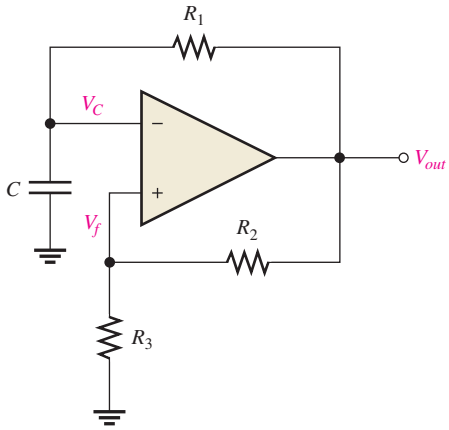

www.EngineeringBooksPdf.com

positive maximum, and the capacitor begins to charge toward V_{out} through R_1. When the capacitor voltage reaches a value equal to the feedback voltage on the noninverting input, the op-amp switches to the maximum negative state. At this point, the capacitor begins to discharge from $+V_f$ toward $-V_f$. When the capacitor voltage reaches $-V_f$, the op-amp switches back to the maximum positive state. This action continues to repeat, as shown in Figure 32, and a square-wave output voltage is obtained.

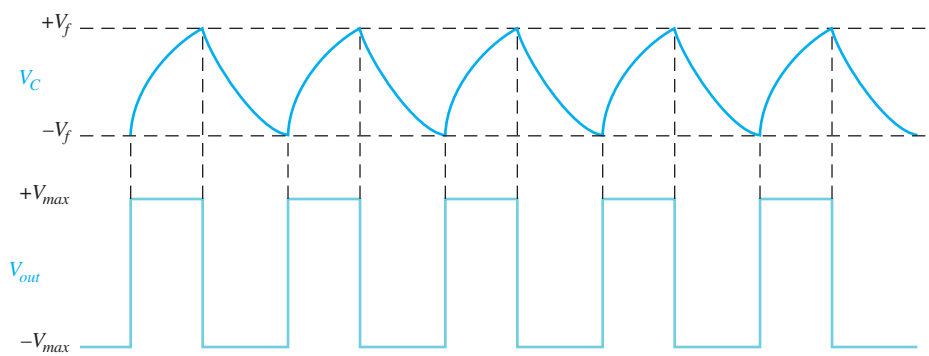

▲ FIGURE 32

Waveforms for the square-wave relaxation oscillator.

SECTION 4 CHECKUP

1. There are two feedback loops in a Wien-bridge oscillator. What is the purpose of each?
2. What is a function generator, and basically what does it do?
3. Upon what principle does a relaxation oscillator operate?

5 ACTIVE FILTERS

Filters are usually categorized by the manner in which the output voltage varies with the frequency of the input voltage. The categories of active filters that we will examine in this section are low-pass, high-pass, and band-pass. The term *active* means that a gain element is used; in this case, an op-amp.

After completing this section, you should be able to

- **Recognize and evaluate basic op-amp filters**
  - Evaluate single-pole and two-pole low-pass filters
  - Evaluate single-pole and two-pole high-pass filters
  - Determine the resonant frequency of a certain type of band-pass filter

Low-Pass Active Filters

An **active filter** is a frequency-selective circuit consisting of one or more op-amps combined with reactive elements (usually an *RC* network). Figure 33 shows a basic low-pass active filter and its response curve. Notice that the input circuit is a single low-pass *RC* circuit, and unity gain is provided by the op-amp with a negative feedback loop. Simply stated, this is a voltage-follower with an *RC* filter between the input signal and the noninverting input.

www.EngineeringBooksPdf.com

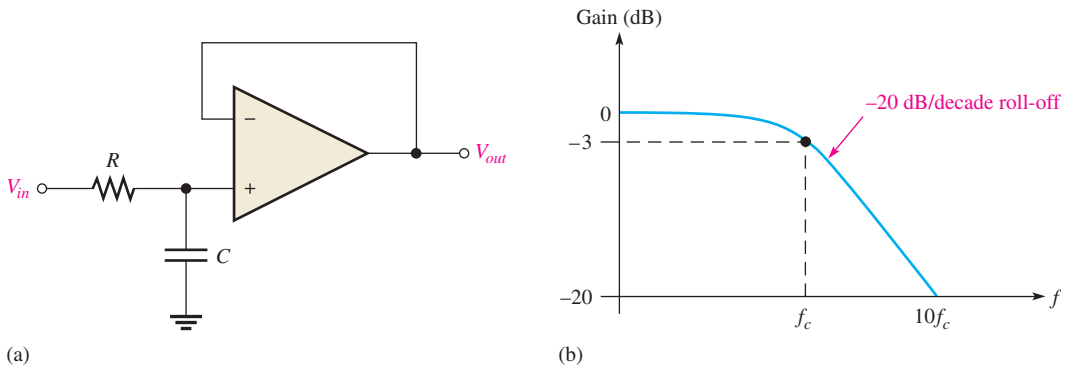

▲ **FIGURE 33**

Single-pole, low-pass active filter and response curve.

The voltage at the noninverting input, $V+$, is as follows:

$$V+ = \left(\frac{X_C}{\sqrt{R^2 + X_C^2}}\right)V_{in}$$

Since the gain of the op-amp is 1, the output voltage is equal to $V+$.

Equation 12

$$\boldsymbol{V_{out} = \left(\frac{X_C}{\sqrt{R^2 + X_C^2}}\right)V_{in}}$$

A filter with one *RC* circuit that produces a −20 dB/decade **roll-off** beginning at f_c is said to be a *single-pole* or *first-order filter.* The term "−20 dB/decade" means that the voltage gain decreases by ten times (−20 dB) when the frequency increases by ten times **(decade)**.

Low-Pass Two-Pole Filters There are several types of active filters and they can have varying numbers of **poles**, but we will use a two-pole filter to illustrate. Figure 34(a) shows a two-pole (second-order) low-pass active filter. Since each *RC* circuit in a filter is considered to be one-pole, the two-pole filter uses two *RC* circuits to produce a roll-off rate of −40 dB/decade, as indicated in Figure 34(b). The active filter in Figure 34 has unity gain below f_c because the op-amp is connected as a voltage-follower.

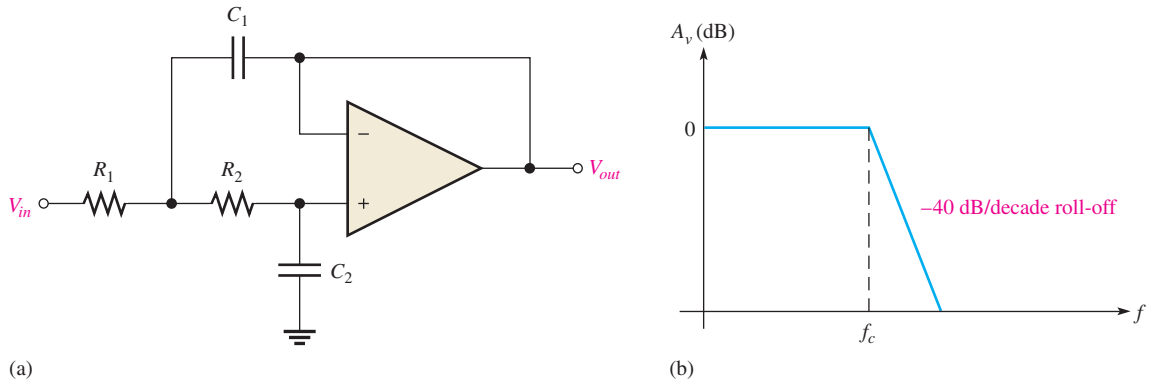

▲ **FIGURE 34**

Two-pole, low-pass active filter and its ideal response curve.

www.EngineeringBooksPdf.com

One of the *RC* circuits in Figure 34(a) is formed by R_1 and C_1, and the other by R_2 and C_2. The critical frequency of this filter can be calculated using the following formula:

$$f_c = \frac{1}{2\pi\sqrt{R_1R_2C_1C_2}}$$

Equation 13

Figure 35(a) shows an example of a two-pole low-pass filter with values chosen to produce a response with a critical frequency of 1 kHz. Note that $C_1 = 2C_2$ and $R_1 = R_2$ because these relationships result in a gain of 0.707 (−3 dB) at f_c. For critical frequencies other than 1 kHz, the capacitance values can be scaled inversely with the frequency. For example, as shown in Figure 35(b) and (c), to get a 2 kHz filter, halve the values of C_1 and C_2; for a 500 Hz filter, double the values.

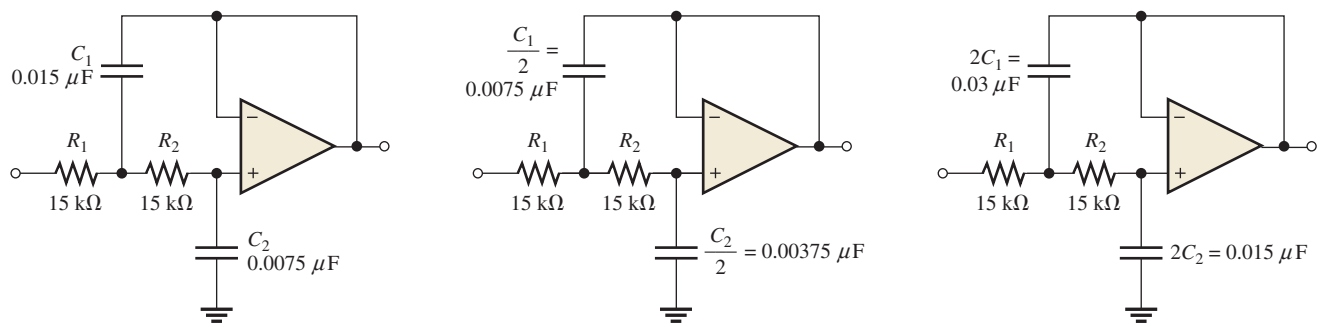

(a) f_c = 1 kHz (b) f_c = 2 kHz (c) f_c = 500 Hz

▲ **FIGURE 35**

Examples of low-pass filters (two-pole).

EXAMPLE 10

Calculate the capacitance values required to produce a 3 kHz critical frequency in the low-pass filter of Figure 36.

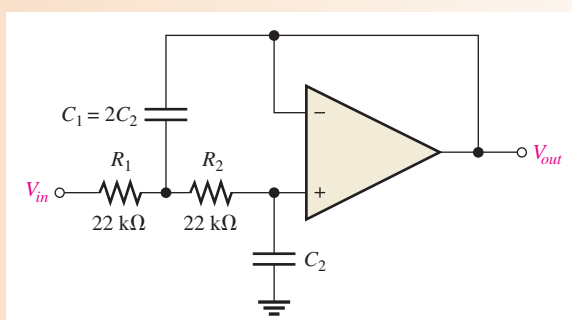

▲ **FIGURE 36**

Solution The resistor values have already been set at 22 kΩ each. Since these differ from the 1 kHz reference filter, you cannot use the scaling method to get the capacitance values. Use Equation 13.

$$f_c = \frac{1}{2\pi\sqrt{R_1R_2C_1C_2}}$$

www.EngineeringBooksPdf.com

Then square both sides.

$$f_c^2 = \frac{1}{4\pi^2 R_1 R_2 C_1 C_2}$$

Since $C_1 = 2C_2$ and $R_1 = R_2 = R$,

$$f_c^2 = \frac{1}{4\pi^2 R^2 (2C_2^2)}$$

Solve for C_2, and then determine C_1.

$$C_2^2 = \frac{1}{8\pi^2 R^2 f_c^2}$$

$$C_2 = \frac{1}{\sqrt{2}} 2\pi R f_c = \frac{0.707}{2\pi R f_c} = \frac{0.707}{2\pi(22\text{ k}\Omega)(3\text{ kHz})} = \mathbf{0.0017\ \mu F}$$

$$C_1 = 2C_2 = 2(0.0017\ \mu\text{F}) = \mathbf{0.0034\ \mu F}$$

Related Problem Determine f_c in Figure 36 for $R_1 = R_2 = 27\text{ k}\Omega$, $C_1 = 0.001\ \mu$F, and $C_2 = 500$ pF.

Open Multisim file E19-10. Verify that the critical frequency is 3 kHz.

High-Pass Active Filters

In Figure 37(a), a high-pass active filter with a −20 dB/decade roll-off is shown. Notice that the input circuit is a single high-pass *RC* circuit and that unity gain is provided by the op-amp with negative feedback. The response curve is shown in Figure 37(b).

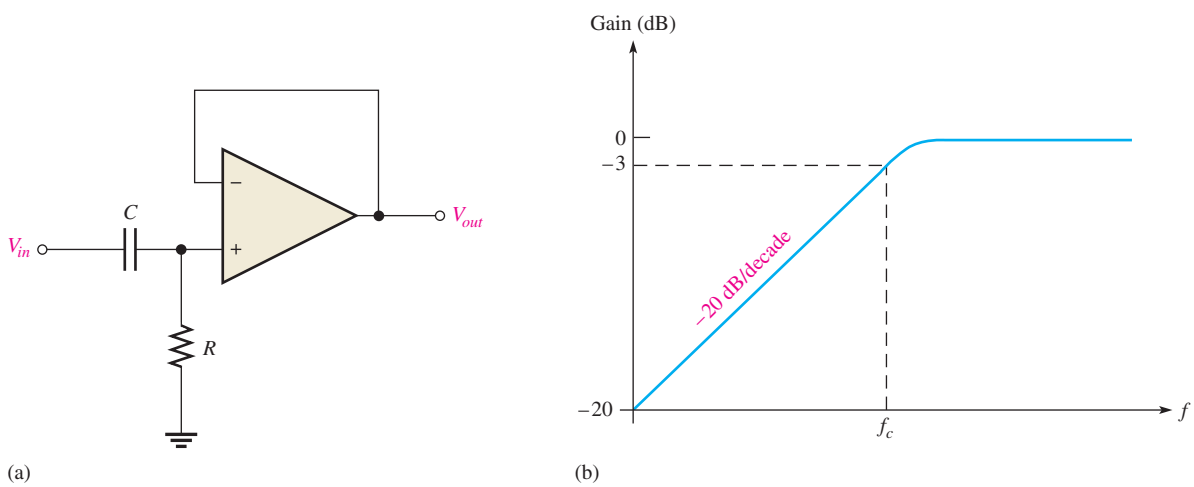

▲ FIGURE 37

Single-pole, high-pass active filter and response curve.

Ideally, a high-pass filter passes all frequencies above f_c without limit, as indicated in Figure 38(a). In practice, of course, such is not the case. All op-amps inherently have internal *RC* circuits that limit the amplifier's response at high frequencies. Such is the case

www.EngineeringBooksPdf.com

with the active high-pass filter. There is an upper frequency limit to its response, which, in effect, makes this type of filter a band-pass filter with a very wide bandwidth rather than a true high-pass filter, as indicated in Figure 38(b). In many applications, the internal high-frequency cutoff is so much greater than the filter's critical frequency that the internal high-frequency cutoff can be neglected.

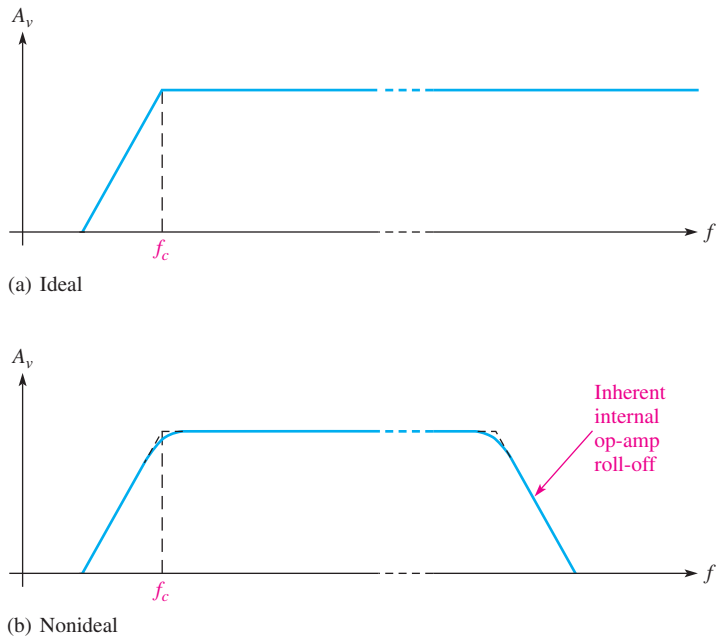

FIGURE 38

High-pass filter response.

The voltage at the noninverting input is as follows:

$$V+ = \left(\frac{R}{\sqrt{R^2 + X_C^2}}\right)V_{in}$$

Since the op-amp is connected as a voltage-follower with unity gain, the output voltage is the same as $V+$.

$$V_{out} = \left(\frac{R}{\sqrt{R^2 + X_C^2}}\right)V_{in}$$

Equation 14

If the internal critical frequencies of the op-amp are assumed to be much greater than the desired f_c of the filter, the gain will roll off at -20 dB/decade as shown in Figure 38(b). This is a single-pole filter because it has one *RC* circuit.

High-Pass Two-Pole Filters Figure 39 shows a two-pole high-pass active filter. Notice that it is identical to the corresponding low-pass type, except for the positions of the

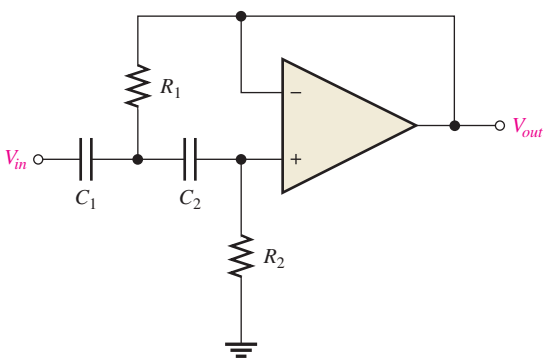

FIGURE 39

Two-pole, high-pass active filter.

www.EngineeringBooksPdf.com

resistors and capacitors. This filter has a roll-off rate of −40 dB/decade below f_c, and the critical frequency is the same as for the low-pass filter given in Equation 13.

Figure 40 shows a two-pole high-pass filter with values chosen to produce a response with a critical frequency of 1 kHz. Note that $R_2 = 2R_1$ and $C_1 = C_2$ because these relationships result in a gain of 0.707 (−3 dB) at f_c. For frequencies other than 1 kHz, the resistance values can be scaled inversely, as was done with the capacitors in the low-pass case.

▶ **FIGURE 40**

Two-pole, high-pass filter (f_c = 1 kHz).

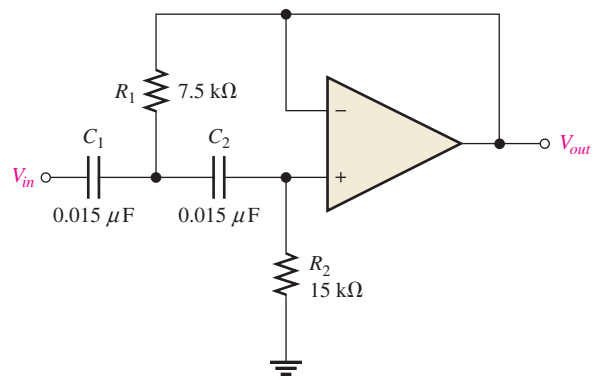

EXAMPLE 11

For the filter of Figure 41, calculate the resistance values required to produce a critical frequency of 5.5 kHz.

▶ **FIGURE 41**

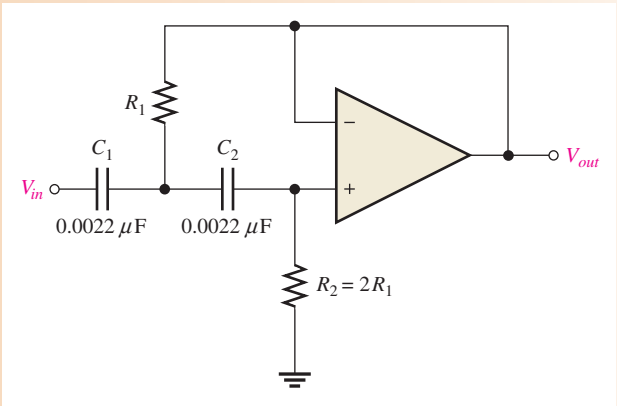

Solution The capacitor values have been preselected to be 0.0022 μF each. Since these differ from the 1 kHz reference filter, you cannot use the scaling method to get the resistor values. Use Equation 13 and square both sides.

$$f_c = \frac{1}{2\pi\sqrt{R_1R_2C_1C_2}}$$

$$f_c^2 = \frac{1}{4\pi^2R_1R_2C_1C_2}$$

Since $R_2 = 2R_1$ and $C_1 = C_2 = C$,

$$f_c^2 = \frac{1}{4\pi^2(2R_1^2)C^2}$$

www.EngineeringBooksPdf.com

Solve for R_1, and then determine R_2.

$$R_1^2 = \frac{1}{8\pi^2 C^2 f_c^2}$$

$$R_1 = \frac{1}{\sqrt{2}\,2\pi C f_c} = \frac{0.707}{2\pi C f_c} = \frac{0.707}{2\pi(0.0022\ \mu\text{F})(5.5\ \text{kHz})} = \mathbf{9.3\ k\Omega}$$

$$R_2 = 2R_1 = 2(9.3\ \text{k}\Omega) = \mathbf{18.6\ k\Omega}$$

Related Problem Determine f_c in Figure 41 for $R_1 = 9.3\ \text{k}\Omega$ and $R_2 = 18.6\ \text{k}\Omega$ if C_1 and C_2 are changed to 4700 pF.

Open Multisim file E19-11. Verify that the critical frequency is 5.5 kHz.

Band-Pass Filter Using a High-Pass/Low-Pass Combination

One way to implement a band-pass filter is to use a cascaded arrangement of a high-pass filter followed by a low-pass filter, as shown in Figure 42(a). Each of the filters shown is a

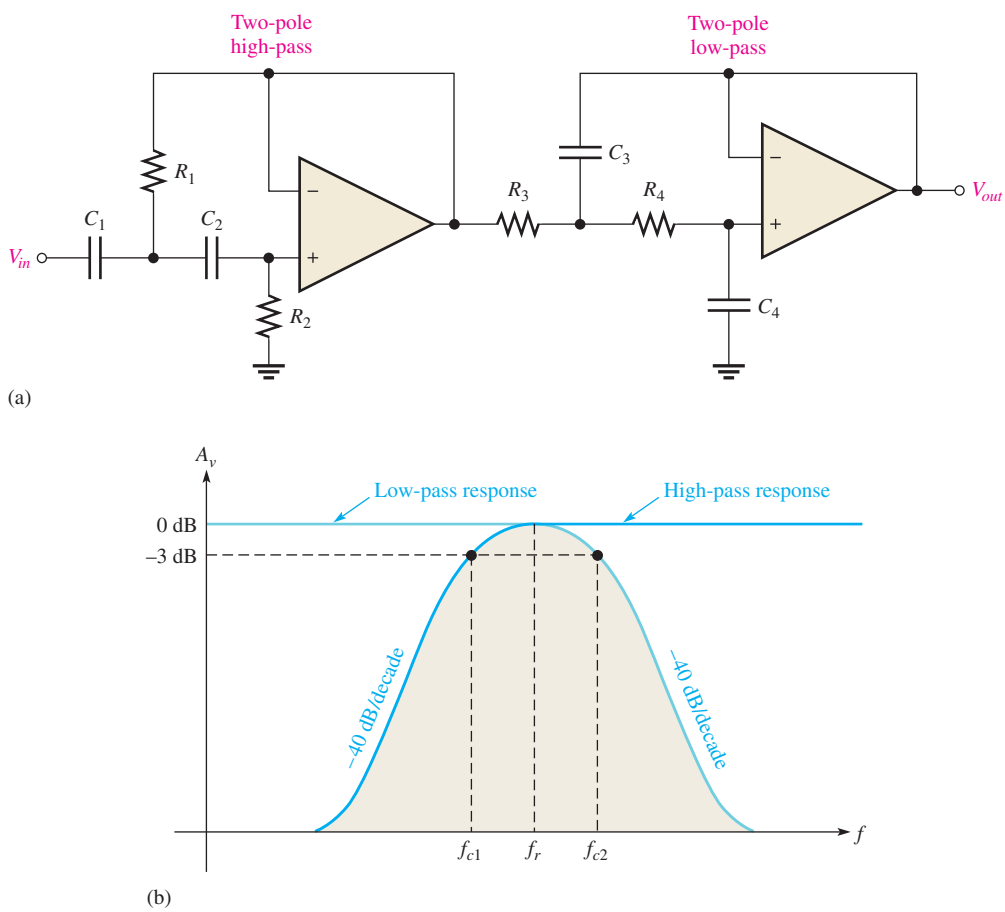

▲ FIGURE 42

Band-pass filter formed by combining a two-pole, high-pass filter with a two-pole, low-pass filter. (It does not matter in which order the filters are cascaded.)

www.EngineeringBooksPdf.com

two-pole configuration so that the roll-off rates of the response curve are −40 dB/decade, as indicated in the composite response curve of part (b). The critical frequency of each filter is chosen so that the response curves overlap, as indicated. The critical frequency of the high-pass filter is lower than that of the low-pass filter.

The lower frequency, f_{c1}, of the passband is set by the critical frequency of the high-pass filter. The upper frequency, f_{c2}, of the passband is the critical frequency of the low-pass filter. Ideally, the center frequency, f_r, of the passband is the geometric average of f_{c1} and f_{c2}. The following formulas express the three frequencies of the band-pass filter in Figure 42.

Equation 15

$$f_{c1} = \frac{1}{2\pi\sqrt{R_1R_2C_1C_2}}$$

Equation 16

$$f_{c2} = \frac{1}{2\pi\sqrt{R_3R_4C_3C_4}}$$

Equation 17

$$f_r = \sqrt{f_{c1}f_{c2}}$$

EXAMPLE 12

(a) Determine the bandwidth and center frequency for the filter in Figure 43.

(b) Draw the response curve.

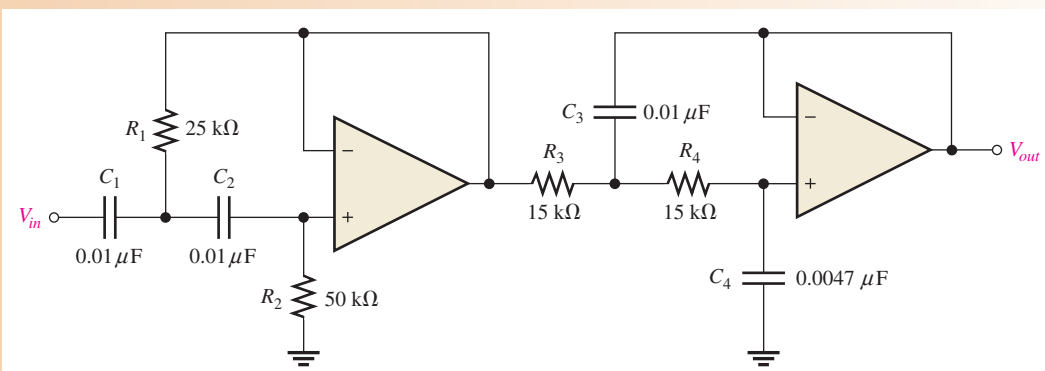

▲ FIGURE 43

Solution **(a)** The critical frequency of the high-pass filter is

$$f_{c1} = \frac{1}{2\pi\sqrt{R_1R_2C_1C_2}} = \frac{1}{2\pi\sqrt{(25\text{ k}\Omega)(50\text{ k}\Omega)(0.01\ \mu\text{F})(0.01\ \mu\text{F})}} = 450\text{ Hz}$$

The critical frequency of the low-pass filter is

$$f_{c2} = \frac{1}{2\pi\sqrt{R_3R_4C_3C_4}} = \frac{1}{2\pi\sqrt{(15\text{ k}\Omega)(15\text{ k}\Omega)(0.01\ \mu\text{F})(0.0047\ \mu\text{F})}} = 1.55\text{ kHz}$$

The bandwidth and the center frequency are

$$BW = f_{c2} - f_{c1} = 1.55\text{ kHz} - 450\text{ Hz} = \mathbf{1.1\ kHz}$$

$$f_r = \sqrt{f_{c1}f_{c2}} = \sqrt{(450\text{ Hz})(1.55\text{ kHz})} = \mathbf{835\ Hz}$$

www.EngineeringBooksPdf.com

(b) The response curve is shown in Figure 44.

▶ FIGURE 44

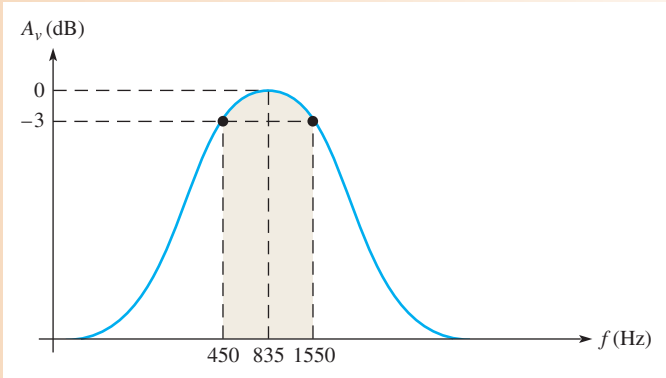

Related Problem Describe how you can increase the bandwidth of the filter in Figure 43 without changing f_{c1}.

SECTION 5 CHECKUP

1. In terms of circuit components, what does the term *pole* refer to?
2. What type of response characterizes the single-pole low-pass filter?
3. How does a high-pass filter differ in its implementation from a corresponding low-pass version?
4. If the resistance values of a high-pass filter are doubled, what happens to the critical frequency?

6 VOLTAGE REGULATORS

Two fundamental types of linear voltage regulators are the series regulator and the shunt regulator.

After completing this section, you should be able to

- **Describe the operation of basic series and shunt voltage regulators**
  - Discuss line regulation and load regulation
  - Explain how a basic op-amp series regulator works
  - Discuss short circuit and overload protection
  - Explain how a basic op-amp shunt regulator works

Line Regulation and Load Regulation

When the dc input (line) voltage changes, an electronic circuit called a *regulator* maintains a nearly constant output voltage, as illustrated in Figure 45. Recall that *line regulation* can be defined as the percentage change in the output voltage for a given change in the input

www.EngineeringBooksPdf.com

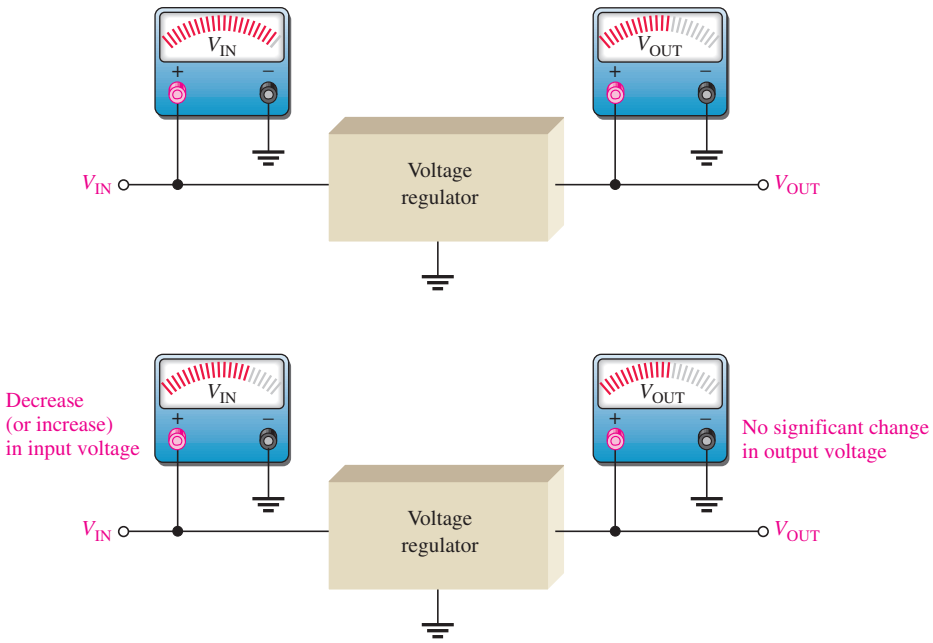

▶ **FIGURE 45**

Line regulation. A change in input (line) voltage does not significantly affect the output voltage of a regulator (within certain limits).

(line) voltage. When taken over a range of input voltage values, line regulation is expressed as a percentage by the following formula:

$$\text{Line regulation} = \left(\frac{\Delta V_{OUT}}{\Delta V_{IN}}\right)100\%$$

When the amount of current through a load changes due to a varying load resistance, the voltage regulator must maintain a nearly constant output voltage across the load, as illustrated in Figure 46.

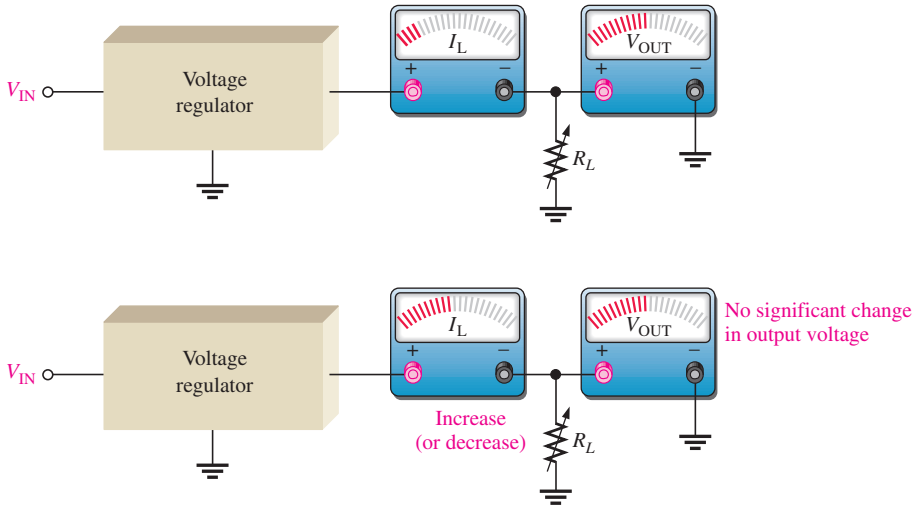

▶ **FIGURE 46**

Load regulation. A change in load current has practically no effect on the output voltage of a regulator (within certain limits).

Recall that *load regulation* can be defined as the percentage change in output voltage for a given change in load current. One way to express load regulation is as a percentage change in output voltage from no-load (NL) to full-load (FL).

$$\text{Load regulation} = \left(\frac{V_{NL} - V_{FL}}{V_{FL}}\right)100\%$$

www.EngineeringBooksPdf.com

Alternately, the load regulation can be expressed as a percentage change in output voltage for each mA change in load current. For example, a load regulation of 0.01%/mA means that the output voltage changes 0.01 percent when the load current increases or decreases 1 mA.

Sometimes power supply manufacturers specify the equivalent output resistance of a power supply (R_{OUT}) instead of its load regulation. Recall that an equivalent Thevenin circuit can be drawn for any two-terminal linear circuit. Figure 47 shows the equivalent Thevenin circuit for a power supply with a load resistor. The Thevenin voltage is the voltage from the supply with no load (V_{NL}), and the Thevenin resistance is the specified output resistance, R_{OUT}. Ideally, R_{OUT} is zero, corresponding to 0% load regulation, but in practical power supplies R_{OUT} is a small value. With the load resistor in place, the output voltage is found by applying the voltage-divider rule:

$$V_{OUT} = V_{NL}\left(\frac{R_L}{R_{OUT} + R_L}\right)$$

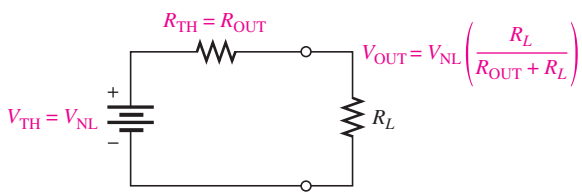

FIGURE 47

Thevenin equivalent circuit for a power supply with a load resistor.

If you let R_{FL} equal the smallest-rated load resistance (largest-rated current), then the full-load output voltage (V_{FL}) is

$$V_{FL} = V_{NL}\left(\frac{R_{FL}}{R_{OUT} + R_{FL}}\right)$$

Solving for V_{NL} in the equation for V_{FL},

$$V_{NL} = V_{FL}\left(\frac{R_{OUT} + R_{FL}}{R_{FL}}\right)$$

$$\text{Load regulation} = \frac{V_{FL}\left(\frac{R_{OUT} + R_{FL}}{R_{FL}}\right) - V_{FL}}{V_{FL}} \times 100\%$$

$$= \left(\frac{R_{OUT} + R_{FL}}{R_{FL}} - 1\right)100\%$$

$$\textbf{Load regulation} = \left(\frac{R_{OUT}}{R_{FL}}\right)100\% \qquad \text{Equation 18}$$

Equation 18 is a useful way of finding the percent load regulation when the output resistance and minimum load resistance are specified.

Basic Series Regulator

A **series regulator** is a type of voltage regulator in which the control element is in series with the load. A schematic representation of a series regulator is shown in Figure 48(a) and its block diagram, showing the basic components, is in Figure 48(b). The error detector is usually an op-amp or comparator, and the control element is usually a power transistor. The error detector compares a sample of the output with a reference voltage and causes the control element to compensate in order to maintain a constant output voltage.

www.EngineeringBooksPdf.com

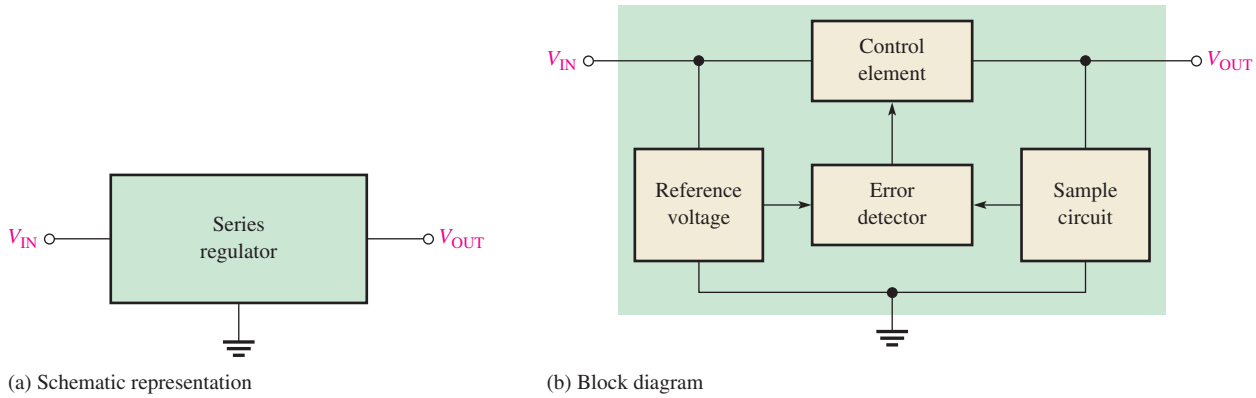

(a) Schematic representation

(b) Block diagram

▲ FIGURE 48

Diagrams of a three-terminal, series voltage regulator.

Regulating Action A basic op-amp series regulator circuit is shown in Figure 49. Its operation is illustrated in Figure 50 and is as follows. The resistive voltage divider formed by R_2 and R_3 senses any change in the output voltage. When the output tries to decrease, as shown in part (a), because of a decrease in V_{IN} or because of an increase in I_L caused by a decrease in R_L, a proportional voltage decrease is applied to the op-amp's inverting input by the voltage divider. Since the zener diode, D_1, holds the other op-amp input at a nearly constant reference voltage (V_{REF}), a small difference voltage (error voltage) is developed across the op-amp's inputs. This difference voltage is amplified, and the op-amp's output voltage (V_B) increases. This increase is applied to the base of Q_1, causing the emitter voltage, V_{OUT}, to increase until the voltage to the inverting input again equals the reference (zener) voltage. This action offsets the attempted decrease in output voltage, thus keeping it nearly constant. The power transistor, Q_1, is usually used with a heat sink because it must handle all of the load current.

The opposite action occurs when the output tries to increase, as illustrated in Figure 50(b).

The op-amp in Figure 49 is connected as a noninverting amplifier in which the reference voltage, V_{REF}, is the input at the noninverting terminal, and the R_2/R_3 voltage divider forms the negative feedback circuit. The closed-loop voltage gain is

Equation 19

$$A_{cl} = 1 + \frac{R_2}{R_3}$$

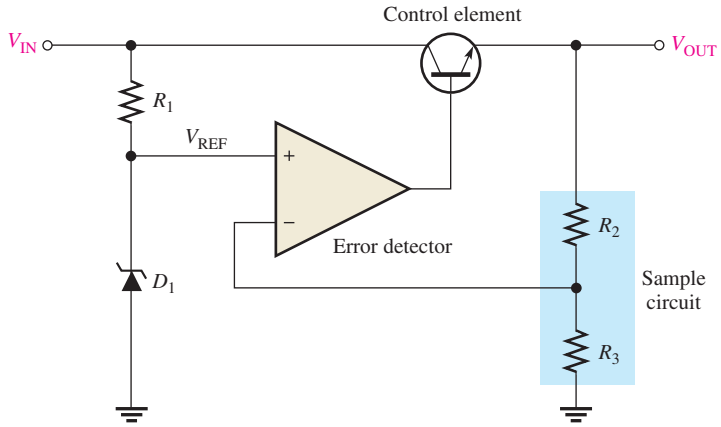

▲ FIGURE 49

Basic op-amp series regulator.

www.EngineeringBooksPdf.com

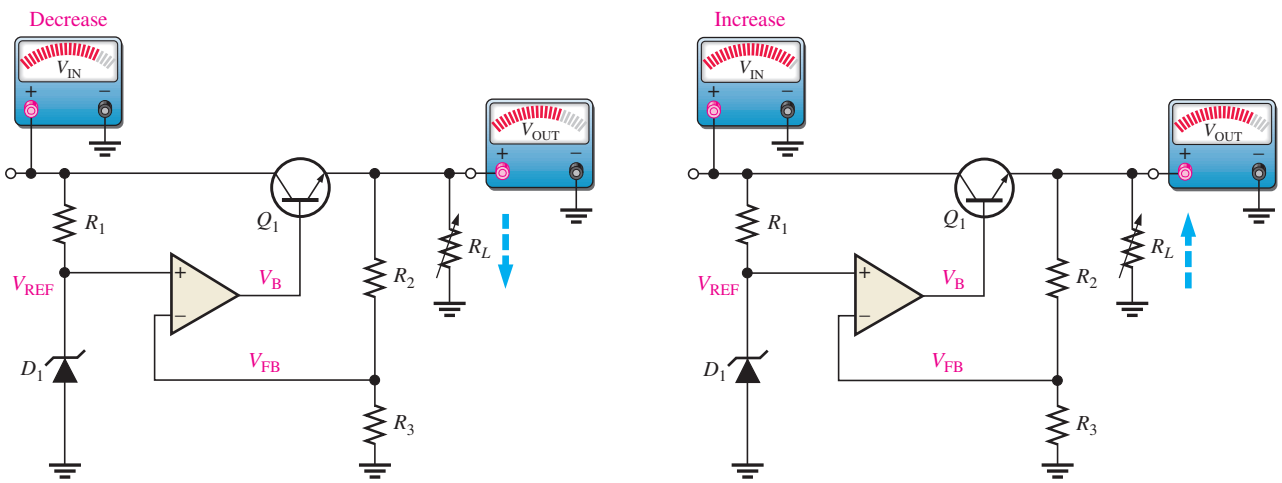

(a) When V_{IN} or R_L decreases, V_{OUT} attempts to decrease. The feedback voltage, V_{FB}, also attempts to decrease, and as a result, the op-amp's output voltage V_B attempts to increase, thus compensating for the attempted decrease in V_{OUT} by increasing the Q_1 emitter voltage. Changes in V_{OUT} are exaggerated for illustration.

When V_{IN} (or R_L) stabilizes at its new lower value, the voltages return to their original values, thus keeping V_{OUT} constant as a result of the negative feedback.

(b) When V_{IN} or R_L increases, V_{OUT} attempts to increase. The feedback voltage, V_{FB}, also attempts to increase, and as a result, V_B, applied to the base of the control transistor, attempts to decrease, thus compensating for the attempted increase in V_{OUT} by decreasing the Q_1 emitter voltage.

When V_{IN} (or R_L) stabilizes at its new higher value, the voltages return to their original values, thus keeping V_{OUT} constant as a result of the negative feedback.

▲ **FIGURE 50**

Illustration of series regulator action that keeps V_{OUT} constant when V_{IN} or R_L changes.

Therefore, the regulated output voltage is

$$V_{OUT} = \left(1 + \frac{R_2}{R_3}\right)V_{REF} \qquad \text{Equation 20}$$

From this analysis you can see that the output voltage is determined by the zener voltage and the resistors R_2 and R_3. It is relatively independent of the input voltage, and therefore, regulation is achieved (as long as the input voltage and load current are within specified limits).

EXAMPLE 13

Determine the output voltage for the regulator in Figure 51.

▶ **FIGURE 51**

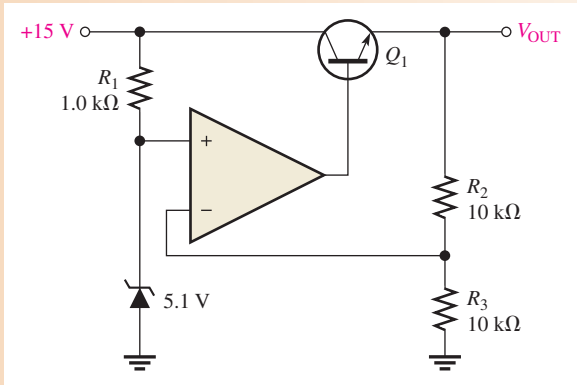

www.EngineeringBooksPdf.com

Solution $V_{REF} = 5.1$ V, the zener voltage. Therefore,

$$V_{OUT} = \left(1 + \frac{R_2}{R_3}\right)V_{REF} = \left(1 + \frac{10\text{ k}\Omega}{10\text{ k}\Omega}\right)5.1\text{ V} = (2)5.1\text{ V} = \mathbf{10.2\ V}$$

Related Problem The following changes are made in the circuit of Figure 51: A 3.3 V zener replaces the 5.1 V zener, $R_1 = 1.8\text{ k}\Omega$, $R_2 = 22\text{ k}\Omega$, and $R_3 = 18\text{ k}\Omega$. What is the output voltage?

Short-Circuit or Overload Protection If an excessive amount of load current is drawn, the control element (series-pass transistor) can be quickly damaged or destroyed. Most regulators use some type of protection from excess current in the form of a current-limiting mechanism.

Figure 52 shows one method of current limiting to prevent overloads called *constant-current limiting.* The current-limiting circuit consists of transistor Q_2 and resistance R_4.

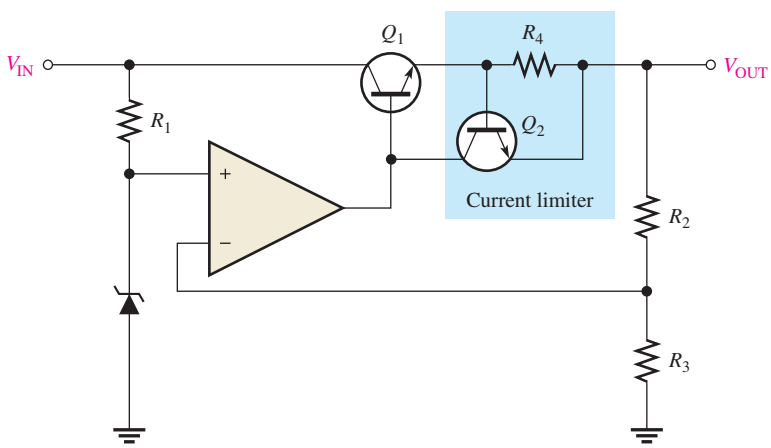

▶ **FIGURE 52**

Series regulator with constant-current limiting.

The load current through R_4 creates a voltage from base to emitter of Q_2. When I_L reaches a predetermined maximum value, the voltage drop across R_4 is sufficient to forward-bias the base-emitter junction of Q_2, thus causing it to conduct. Enough Q_1 base current is diverted into the collector of Q_2 so that I_L is limited to its maximum value $I_{L(max)}$. Since the base-to-emitter voltage of Q_2 cannot exceed about 0.7 V for a silicon transistor, the voltage across R_4 is held to this value, and the load current is limited to

$$I_{L(max)} = \frac{0.7\text{ V}}{R_4}$$

Basic Shunt Regulator

As you have seen, the control element in the series regulator is the series-pass transistor. A simple representation of a shunt type of linear regulator is shown in Figure 53(a), and the basic components are shown in part (b).

In the basic **shunt regulator**, the control element is a transistor (Q_1) in parallel with the load, as shown in Figure 54. A series resistor (R_1) is in series with the load. The operation of the circuit is similar to that of the series regulator, except that regulation is achieved by controlling the current through the parallel transistor Q_1.

When the output voltage tries to decrease due to a change in input voltage or load current, as shown in Figure 55(a), the attempted decrease is sensed by R_3 and R_4 and applied to the op-amp's noninverting input. The resulting difference in voltage reduces the

www.EngineeringBooksPdf.com

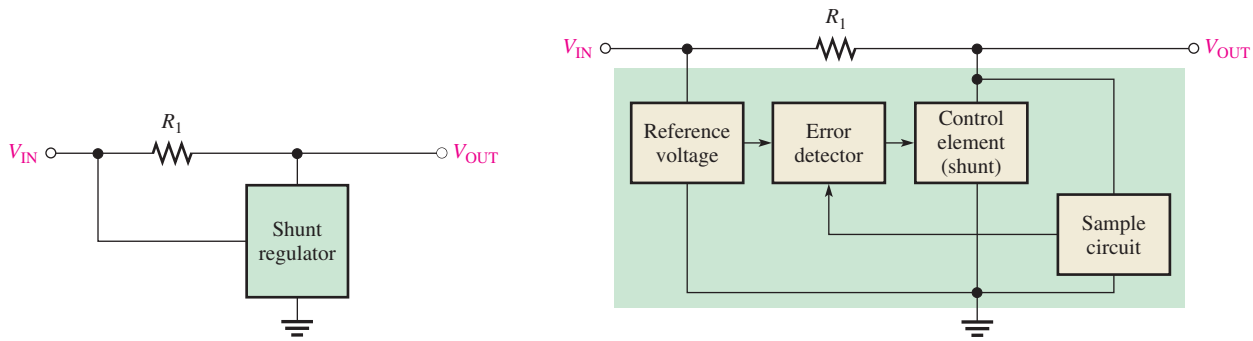

(a) Schematic representation

(b) Block diagram

▲ **FIGURE 53**

Diagrams of a three-terminal shunt regulator.

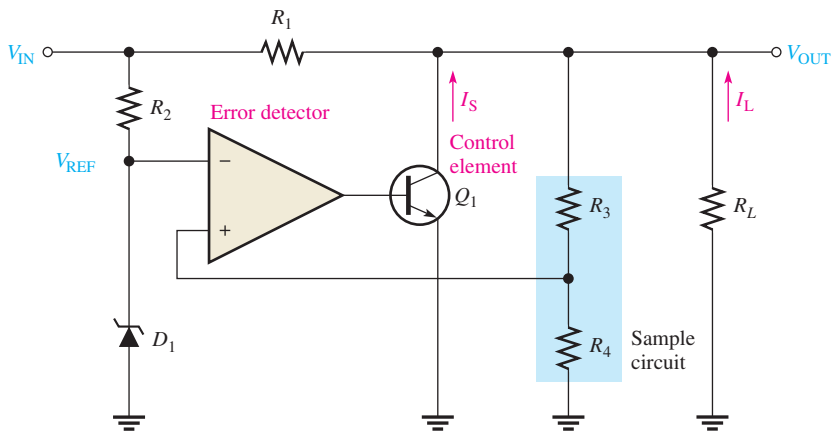

◀ **FIGURE 54**

Basic op-amp shunt regulator.

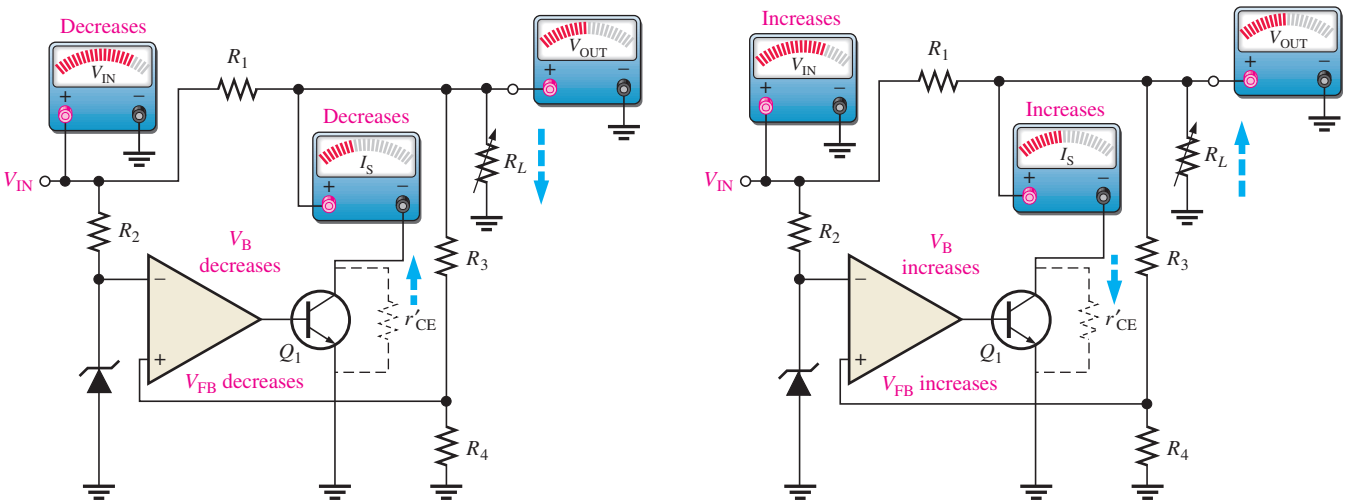

(a) Response to a decrease in V_{IN} or R_L

(b) Response to an increase in V_{IN} or R_L

▲ **FIGURE 55**

Sequence of responses when V_{OUT} tries to change as a result of a change in V_{IN} or R_L.

www.EngineeringBooksPdf.com

op-amp's output (V_B), driving Q_1 less, thus reducing its collector current (shunt current) and increasing its internal collector-to-emitter resistance, r'_{CE}. Since r'_{CE} acts as a voltage divider with R_1, this action offsets the attempted decrease in V_{OUT} and maintains it at an almost constant level.

The opposite action occurs when the output tries to increase, as shown in Figure 55(b). With I_L and V_{OUT} constant, a change in the input voltage produces a change in shunt current (I_S) as follows:

$$\Delta I_S = \frac{\Delta V_{IN}}{R_1}$$

With a constant V_{IN} and V_{OUT}, a change in load current causes an opposite change in shunt current.

$$\Delta I_S = -\Delta I_L$$

This formula says that if I_L increases, I_S decreases, and vice versa.

The shunt regulator is less efficient than the series type but offers inherent short-circuit protection. If the output is shorted ($V_{OUT} = 0$), the load current is limited by the series resistor, R_1, to a maximum value ($I_S = 0$).

$$I_{L(max)} = \frac{V_{IN}}{R_1}$$

EXAMPLE 14

In Figure 56, what power rating must R_1 have if the maximum input voltage is 12.5 V?

▶ **FIGURE 56**

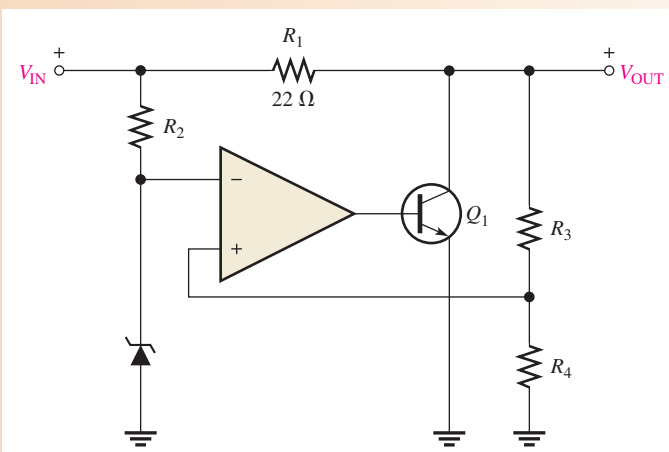

Solution The worst-case power dissipation in R_1 occurs when the output is short-circuited and $V_{OUT} = 0$. When $V_{IN} = 12.5$ V, the voltage dropped across R_1 is

$$V_{IN} - V_{OUT} = 12.5 \text{ V}$$

The power dissipation in R_1 is

$$P_{R1} = \frac{V_{R1}^2}{R_1} = \frac{(12.5 \text{ V})^2}{22\ \Omega} = \mathbf{7.1\ W}$$

Therefore, a resistor of at least 10 W should be used.

Related Problem In Figure 56, R_1 is changed to 33 Ω. What must be the power rating of R_1 if the maximum input voltage is 24 V?

www.EngineeringBooksPdf.com

SECTION 6 CHECKUP

1. Define line regulation.
2. Define load regulation.
3. How does the control element in a shunt regulator differ from that in a series regulator?
4. Name one advantage and one disadvantage of a shunt regulator over a series type.

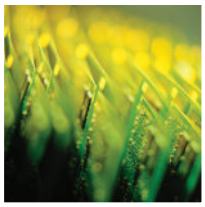

Application Assignment

PUTTING YOUR KNOWLEDGE TO WORK

In this application assignment, you will focus on the regulated power supply which provides the FM stereo receiver with dual polarity dc voltages. The op-amps in the channel separation circuits and the audio amplifiers operate from ± 12 V. Both positive and negative voltage regulators are used to regulate the rectified and filtered voltages from a bridge rectifier.

This power supply utilizes a full-wave bridge rectifier with both the positive and negative rectified voltages taken off the bridge at the appropriate points and filtered by electrolytic capacitors. Integrated circuit voltage regulators (7812 and 7912) provide regulation for the positive and negative voltages. A block diagram is shown in Figure 57.

Step 1: Relating the PC Board to a Schematic

Develop a schematic for the power supply in Figure 58. Add any missing labels and include the IC pin numbers. The rectifier diodes are 1N4001s, the filter capacitors C_1 and C_2 are 2200 μF and the transformer has a turns ratio of 5:1.

Step 2: Analyzing the Power Supply Circuits

1. Determine the approximate voltage with respect to ground at each of the four "corners" of the bridge. State whether each voltage is ac or dc.
2. Calculate the peak inverse voltage of the rectifier diodes.
3. Show the voltage waveform across D_1 for a full cycle of the ac input.

Step 3: Troubleshooting the Power Supply

State the probable cause or causes for the following:

1. Both positive and negative output voltages are zero.
2. Positive output voltage is zero, and the negative output voltage is -12 V.
3. Negative output voltage is zero, and the positive output voltage is $+12$ V.
4. There are radical voltage fluctuations on the output of the positive regulator.

Indicate the voltages you should measure at the four corners of the diode bridge for the following faults:

1. Diode D_1 open
2. Capacitor C_2 open

Review

1. What should be the rating of the power supply fuse?
2. What purpose do the 0.33 μF capacitors serve?
3. Which regulator provides the negative voltage?

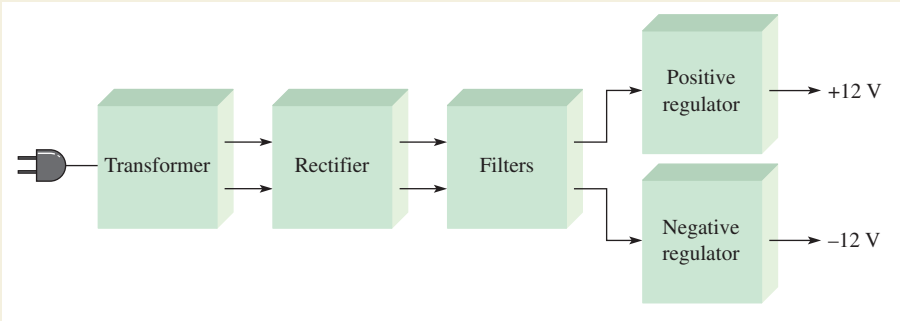

▲ **FIGURE 57**

Block diagram of the dual-polarity power supply.

www.EngineeringBooksPdf.com

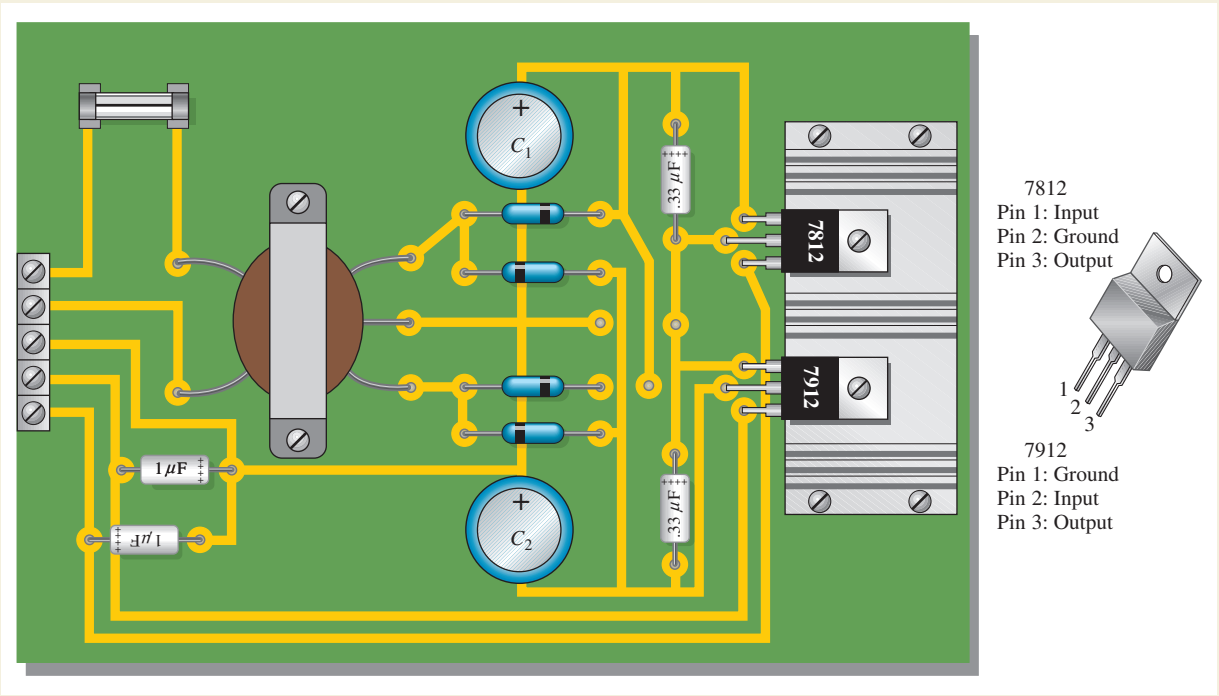

▲ FIGURE 58

SUMMARY

- In an op-amp comparator, when the input voltage exceeds a specified reference voltage, the output changes state.
- The output voltage of a summing amplifier is proportional to the sum of the input voltages.
- An averaging amplifier is a summing amplifier with a closed-loop gain equal to the reciprocal of the number of inputs.
- In a scaling adder, a different weight can be assigned to each input, thus making the input contribute more or contribute less to the output.
- The integral of a step is a ramp.
- The derivative of a ramp is a step.
- In a Wien-bridge oscillator, the closed-loop gain must be equal to 3 in order to have unity gain around the positive feedback loop.
- In filter terminology, a single *RC* circuit is called a *pole.*
- Each pole in a filter causes the output to roll off (decrease) at a rate of -20 dB/decade.
- Two-pole filters roll off at a maximum rate of -40 dB/decade.
- Line regulation establishes a constant output voltage over a range of input voltages.
- Load regulation establishes a constant output voltage over a range of load values.
- In a series voltage regulator, the control element is a transistor in series with the load.
- In a shunt voltage regulator, the control element is a transistor in parallel with a load.
- The terminals on a three-terminal voltage regulator are input voltage, output voltage, and ground.

www.EngineeringBooksPdf.com

KEY TERMS

Active filter A frequency-selective circuit consisting of one or more op-amps combined with reactive elements (usually an *RC* network).

Averaging amplifier An amplifier with several inputs that produces an output voltage that is the negative value of the mathematical average of the input voltages.

Comparator A circuit that compares two input voltages and produces an output in either of two states indicating the greater or less than relationship of the inputs.

Differentiator A circuit that produces an inverted output that approaches the mathematical derivative of the input, which is the rate of change.

Integrator A circuit that produces an output that approaches the mathematical integral of the input.

Relaxation oscillator A type of oscillator, generally nonsinusoidal, whose operation is based on the charging and discharging of a capacitor.

Scaling adder A special type of summing amplifier with weighted inputs.

Series regulator A type of voltage regulator in which the control element is in series with the load.

Shunt regulator A type of voltage regulator with the control element between the output and ground.

Summing amplifier An amplifier with several inputs that produces a negative output voltage proportional to the algebraic sum of the input voltages.

Triangular-wave oscillator An electronic oscillator that uses a comparator with two trip points and an integrator to produce triangular waves.

Wien-bridge oscillator An electronic oscillator that can produce low distortion sine waves over a wide range of frequencies by using a lead-lag feedback network and stabilized gain.

TRUE/FALSE QUIZ

Answers are at the end of the chapter.

1. A comparator will have a positive output whenever the noninverting input is greater than the inverting input.
2. A summing amplifier actually produces the negative sum of the input voltages.
3. In an averaging amplifier, the feedback resistor is equal to the input resistors.
4. An ideal integrator has a capacitor in series with the input and a resistor in the feedback path.
5. If the input to a differentiator is a negative-going ramp, the output will be a constant negative voltage.
6. The output of a Wien-bridge oscillator is a sinusoidal waveform.
7. A Wien-bridge oscillator uses both positive and negative feedback.
8. A two-pole filter has a maximum roll-off rate of −20 dB/decade.
9. One type of band-pass filter combines a low-pass and high-pass filter.
10. The control element of a series regulator is a transistor in series with the output.

FORMULAS

1	$V_{REF} = \frac{R_2}{R_1 + R_2}(+V)$	Comparator reference voltage
2	$V_{OUT} = -(V_{IN1} + V_{IN2} + V_{IN3} + \cdots + V_{INn})$	n-input adder
3	$V_{OUT} = -\frac{R_f}{R}(V_{IN1} + V_{IN2} + \cdots + V_{INn})$	Summing amplifier with gain
4	$V_{OUT} = -\left(\frac{R_f}{R_1}V_{IN1} + \frac{R_f}{R_2}V_{IN2} + \cdots + \frac{R_f}{R_n}V_{INn}\right)$	Scaling adder

www.EngineeringBooksPdf.com

5	$\frac{\Delta V_{out}}{\Delta t} = -\frac{V_{in}}{R_i C}$	Rate of change in integrator
6	$V_{out} = -\left(\frac{V_C}{t}\right) R_f C$	Differentiator output with ramp input
7	$\frac{V_{out}}{V_{in}} = \frac{1}{3}$	Lead-lag gain (attenuation) at f_r
8	$f_r = \frac{1}{2\pi RC}$	Lead-lag resonant frequency
9	$V_{UTP} = +V_{max}\left(\frac{R_3}{R_2}\right)$	Upper trigger point, triangular-wave oscillator
10	$V_{LTP} = -V_{max}\left(\frac{R_3}{R_2}\right)$	Lower trigger point, triangular-wave oscillator
11	$f = \frac{1}{4R_1C}\left(\frac{R_2}{R_3}\right)$	Frequency of oscillation, triangular-wave oscillator
12	$V_{out} = \left(\frac{X_C}{\sqrt{R^2 - X_C^2}}\right) V_{in}$	Output of one-pole filter (low-pass only)
13	$f_c = \frac{1}{2\pi\sqrt{R_1R_2C_1C_2}}$	Critical frequency of two-pole filter (low-pass)
14	$V_{out} = \left(\frac{R}{\sqrt{R^2 + X_C^2}}\right) V_{in}$	Output of one-pole filter (high-pass only)
15	$f_{c1} = \frac{1}{2\pi\sqrt{R_1R_2C_1C_2}}$	Lower critical frequency of a band-pass filter
16	$f_{c2} = \frac{1}{2\pi\sqrt{R_3R_4C_3C_4}}$	Upper critical frequency of a band-pass filter
17	$f_r = \sqrt{f_{c1}f_{c2}}$	Center frequency of a band-pass filter
18	$\textbf{Load regulation} = \left(\frac{R_{OUT}}{R_{FL}}\right)100\%$	Load regulation
19	$A_{cl} = 1 + \frac{R_2}{R_3}$	Closed-loop voltage gain, voltage regulator
20	$V_{OUT} = \left(1 + \frac{R_2}{R_3}\right) V_{REF}$	Series regulator output voltage

SELF-TEST

Answers are at the end of the chapter.

1. The purpose of a comparator is to
   (a) amplify an input voltage
   (b) detect the occurrence of a changing input voltage
   (c) produce a change in output when an input voltage equals a reference voltage
   (d) maintain a constant output when the dc input voltage changes
2. To use a comparator for zero-level detection, the inverting input is connected to
   (a) ground
   (b) the dc supply voltage
   (c) a positive reference voltage
   (d) a negative reference voltage
3. In a 5 V level detector circuit, the
   (a) output is limited to 5 V
   (b) inverting input is connected to +5 V
   (c) input signal is limited to a 5 V peak value
   (d) input signal must be riding on a +5 dc level

www.EngineeringBooksPdf.com

4. In a certain four-input summing amplifier, all the input resistors are 2.2 kΩ and the feedback resistor is 2.2 kΩ. If all the input voltages are 2 V, the output voltage is
   (a) −2 V **(b)** −10 V **(c)** −2.2 V **(d)** −8 V
5. The gain of the amplifier in Question 4 is
   (a) −1 **(b)** −2.2 **(c)** −4 **(d)** unknown
6. To convert a summing amplifier to an averaging amplifier,
   (a) all input resistors must be a different value
   (b) the ratio R_f/R must equal the reciprocal of the number of inputs
   (c) the ratio R_f/R must equal the number of inputs
   (d) answers (a) and (b)
7. In a scaling adder, the
   (a) input resistors are all the same value
   (b) feedback resistor is equal to the average of the input resistors
   (c) input resistors have values that depend on the assigned weight of each input
   (d) ratio R_f/R must be the same for each input
8. The feedback path in an ideal op-amp integrator consists of a
   (a) resistor **(b)** capacitor
   (c) resistor and a capacitor in series **(d)** resonant circuit
9. The feedback path in an op-amp differentiator consists of a
   (a) resistor
   (b) capacitor
   (c) resistor and a capacitor in series
   (d) resistor and a capacitor in parallel
10. The op-amp comparator circuit uses
    (a) positive feedback **(b)** negative feedback
    (c) regenerative feedback **(d)** no feedback
11. Unity gain and zero phase shift around the feedback loop are conditions that describe
    (a) an active filter **(b)** a comparator
    (c) an oscillator **(d)** an integrator or differentiator
12. The input frequency of a single-pole, low-pass active filter increases from 1.5 kHz to 150 kHz. If the critical frequency is 1.5 kHz, the gain decreases by
    (a) 3 dB **(b)** 20 dB **(c)** 40 dB **(d)** 60 dB

PROBLEMS

Answers to odd-numbered problems are at the end of the chapter.

BASIC PROBLEMS

SECTION 1 Comparators

1. Determine the output level (maximum positive or maximum negative) for each comparator in Figure 59.

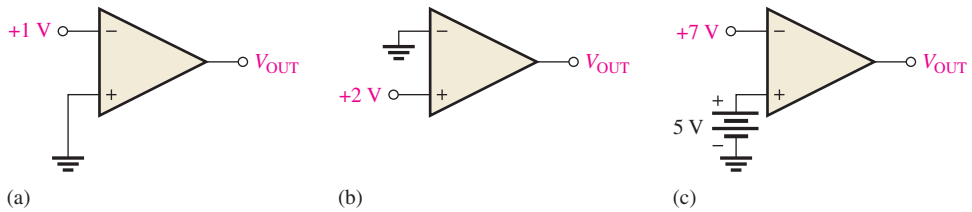

▲ FIGURE 59

www.EngineeringBooksPdf.com

2. A certain op-amp has an open-loop gain of 80,000. The maximum saturated output levels of this particular device are ±12 V when the dc supply voltages are ±13 V. If a differential voltage of 0.15 mV rms is applied between the inputs, what is the peak-to-peak value of the output?
3. Draw the output voltage waveform for each circuit in Figure 60 with respect to the input. Show voltage levels.

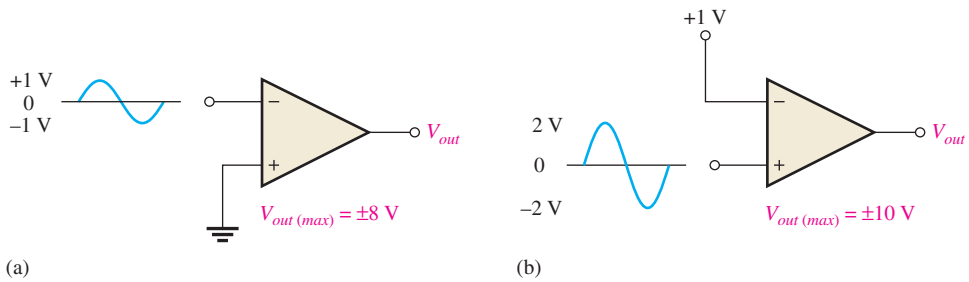

▲ FIGURE 60

SECTION 2 Summing Amplifiers

4. Determine the output voltage for each circuit in Figure 61.

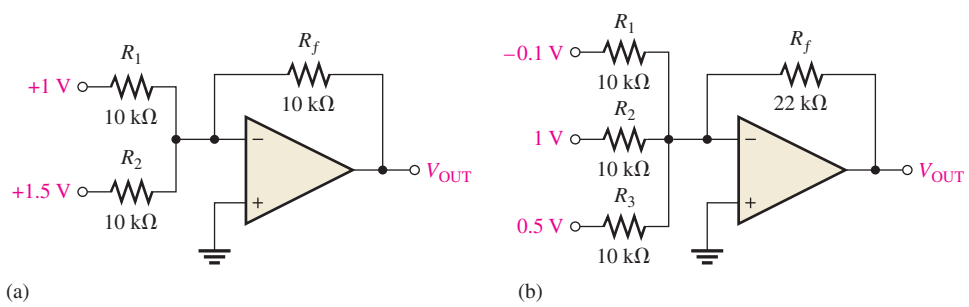

▲ FIGURE 61

5. Determine the following in Figure 62:
   (a) V_{R1} and V_{R2} **(b)** current through R_f **(c)** V_{OUT}
6. Find the value of R_f necessary to produce an output that is five times the negative sum of the inputs in Figure 62.

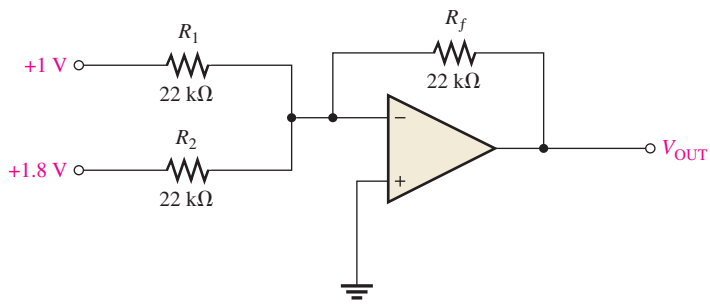

▲ FIGURE 62

www.EngineeringBooksPdf.com

7. Find the output voltage when the input voltages shown in Figure 63 are applied to the scaling adder. What is the current through R_f?

▶ FIGURE 63

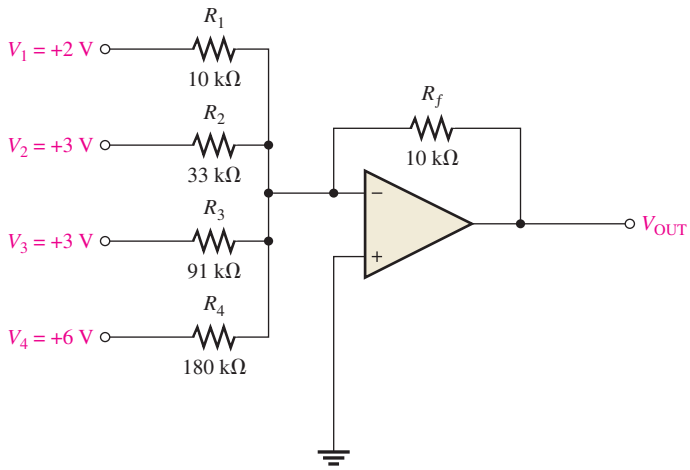

8. Determine the values of the input resistors required in a four-point scaling adder so that the lowest weighted input is 1 and each successive input has a weight *twice* the previous one. Use $R_f = 100\ \text{k}\Omega$.

SECTION 3 Integrators and Differentiators

9. Determine the rate of change of the output voltage in response to the step input to the ideal integrator in Figure 64.

▶ FIGURE 64

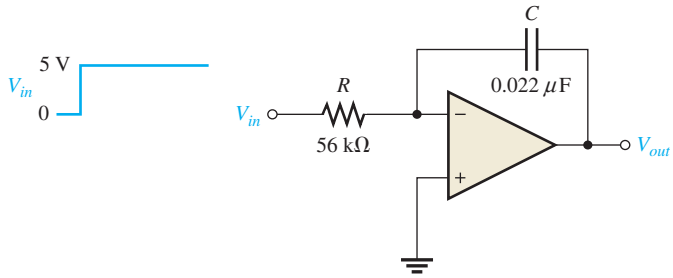

10. A triangular waveform is applied to the input of the ideal differentiator in Figure 65 as shown. Determine what the output should be, and draw its waveform in relation to the input.

▶ FIGURE 65

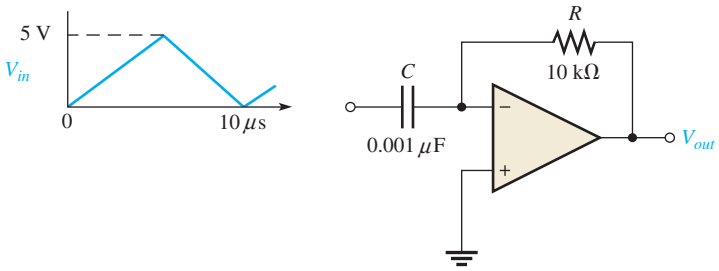

SECTION 4 Oscillators

11. A certain lead-lag circuit has a resonant frequency of 3.5 kHz. What is the rms output voltage if an input signal with a frequency equal to f_r and with an rms value of 2.2 V is applied to the input?

12. Calculate the resonant frequency of a lead-lag circuit with the following values: $R_1 = R_2 = 6.2\ \text{k}\Omega$, and $C_1 = C_2 = 0.022\ \mu\text{F}$.

www.EngineeringBooksPdf.com

13. Determine the JFET drain-to-source resistance in Figure 66 that produces a closed-loop gain of 3.

14. Explain the purpose of D_1 in Figure 66.

15. Find the frequency of oscillation for the Wien-bridge oscillator in Figure 66.

▶ FIGURE 66

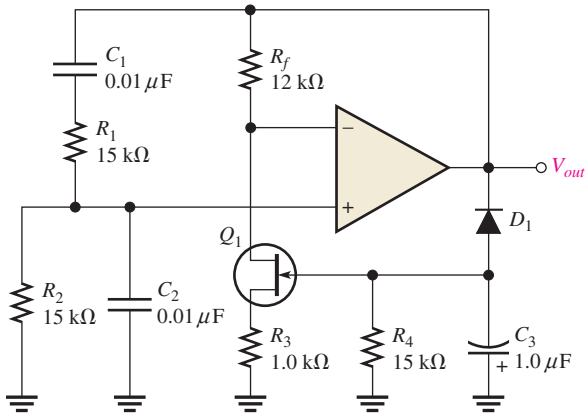

16. What type of signal does the circuit in Figure 67 produce? Determine the frequency of the output.

17. Show how to change the frequency of oscillation in Figure 67 to 10 kHz.

▶ FIGURE 67

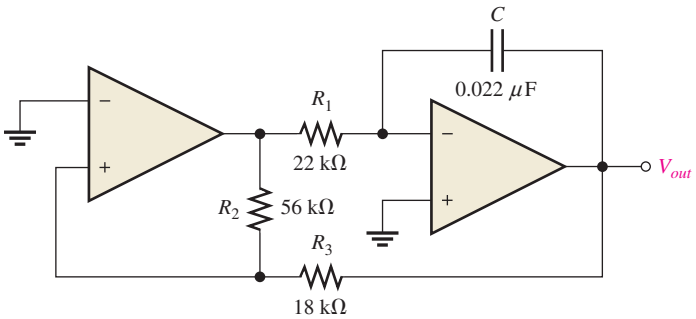

SECTION 5 Active Filters

18. Determine the number of poles in each active filter in Figure 68, and identify its type.

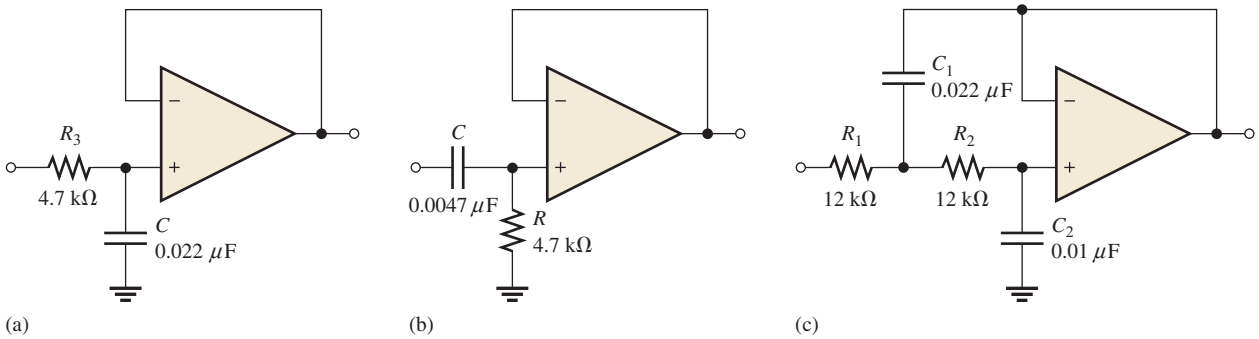

▲ FIGURE 68

www.EngineeringBooksPdf.com

19. Calculate the critical frequencies for the filters in Figure 68.

20. Determine the bandwidth and center frequency of each filter in Figure 69.

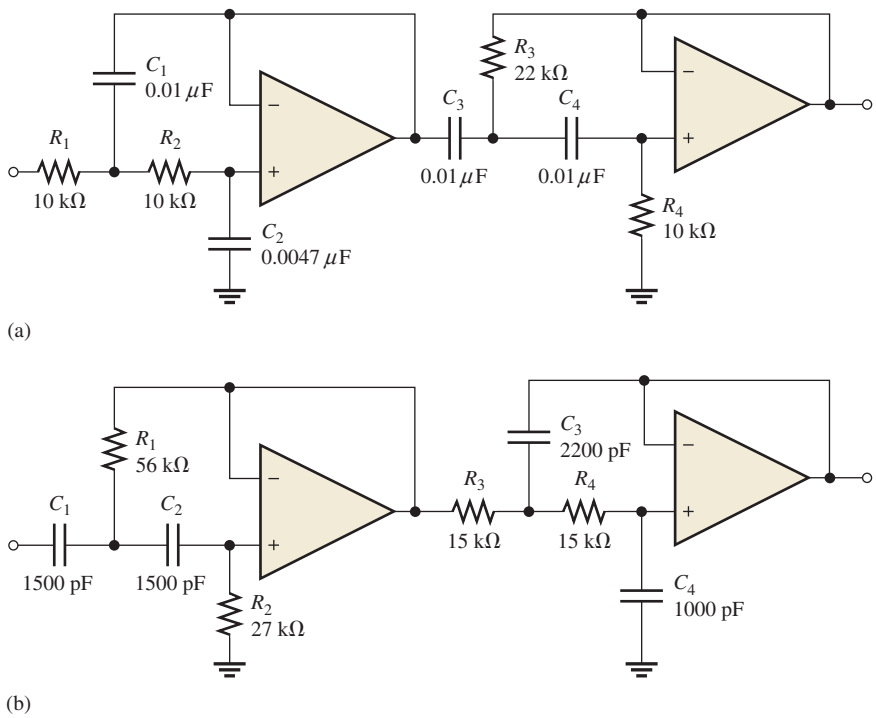

▲ FIGURE 69

SECTION 6 Voltage Regulators

21. Determine the output voltage for the series regulator in Figure 70.

22. If R_3 in Figure 70 is doubled, what happens to the output voltage?

23. If the zener voltage is 2.7 V instead of 2 V in Figure 70, what is the output voltage?

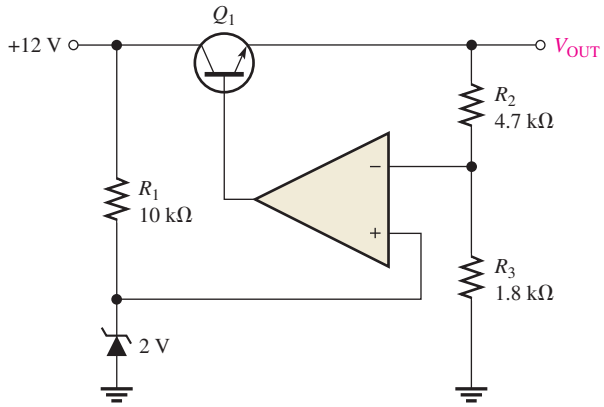

▲ FIGURE 70

www.EngineeringBooksPdf.com

24. A series voltage regulator with constant-current limiting is shown in Figure 71. Determine the value of R_4 if the load current is to be limited to a maximum value of 250 mA. What power rating must R_4 have?

▶ FIGURE 71

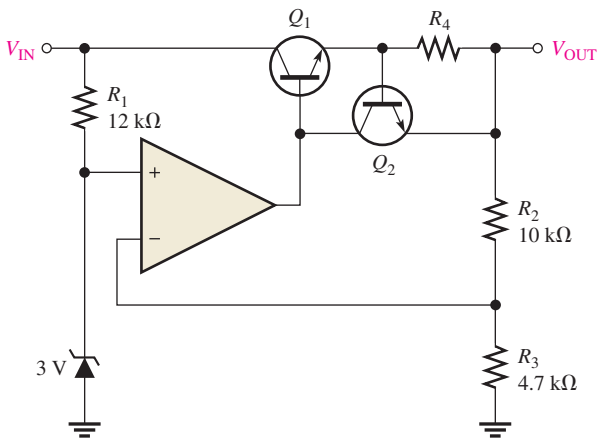

25. If R_4 (determined in Problem 24) is halved, what is the maximum load current?

26. In the shunt regulator of Figure 72, when the load current increases, does Q_1 conduct more or less? Why?

27. Assume that I_L remains constant and V_{IN} increases by 1 V in Figure 72. What is the change in the collector current of Q_1?

28. With a constant input voltage of 18 V, the load resistance in Figure 72 is varied from 1.0 kΩ to 1.2 kΩ. Neglecting any change in output voltage, how much does the shunt current through Q_1 change?

▶ FIGURE 72

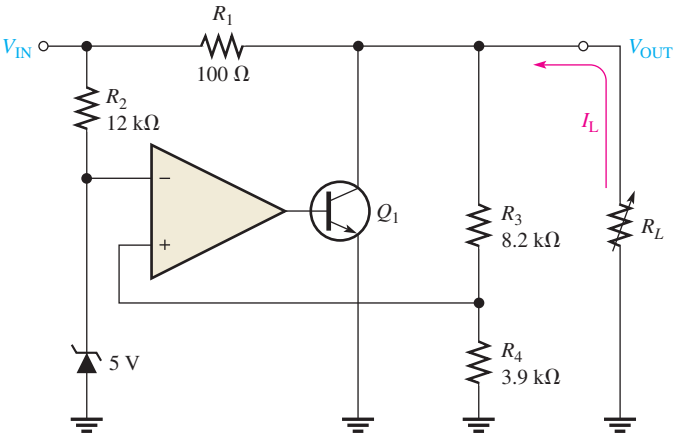

MULTISIM TROUBLESHOOTING PROBLEMS

29. Open file P19-29; files are found at www.pearsonhighered/floyd/. Determine if there is a fault. If so, identify it.

30. Open file P19-30 and determine if there is a fault. If so, identify it.

31. Open file P19-31 and determine if there is a fault. If so, identify it.

32. Open file P19-32 and determine if there is a fault. If so, identify it.

www.EngineeringBooksPdf.com

ANSWERS

SECTION REVIEWS

SECTION 1 Comparators

1. Switching speed and bias current
2. $(10\,k\Omega/110\,k\Omega)15\,V = 1.36\,V$
3. See Figure 73.

▶ FIGURE 73

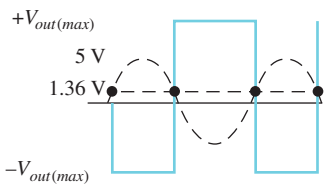

SECTION 2 Summing Amplifiers

1. The summary point is the terminal of the op-amp where the input resistors are commonly connected.
2. $R_f/R = 1/5 = 0.2$
3. $5\,k\Omega$

SECTION 3 Integrators and Differentiators

1. The feedback element in an integrator is a capacitor.
2. The capacitor voltage is linear because the capacitor current is constant.
3. A practical integrator has a large-value parallel resistor in the feedback path.
4. The feedback element in a differentiator is a resistor.
5. The output of a differentiator is proportional to the rate of change of the input.
6. A practical differentiator has a small-value resistor in series with the input.

SECTION 4 Oscillators

1. The negative feedback loop sets the closed-loop gain; the positive feedback loop sets the frequency.
2. A function generator is an oscillator instrument that produces more than one type of output waveform.
3. The basis of a relaxation oscillator is the charging and discharging of a capacitor.

SECTION 5 Active Filters

1. A pole is a single *RC* circuit.
2. A single-pole low-pass frequency response is flat from dc to the critical frequency.
3. The *R* and *C* positions are interchanged.
4. The critical frequency is halved.

SECTION 6 Voltage Regulators

1. Line regulation is the change in output voltage for a given change in line (input) voltage, normally expressed as a percentage.
2. Load regulation is the change in output voltage for a given change in load current, normally expressed as a percentage.
3. In a shunt regulator, the control element is in parallel with the load rather than in series with the load.
4. A shunt regulator has inherent current limiting, but it is less efficient than a series regulator because part of the load current must be bypassed through the control element.

www.EngineeringBooksPdf.com

RELATED PROBLEMS FOR EXAMPLES

1 1.96 V
2 −10.5 V
3 −5.73 V
4 Add a 100 kΩ input resistor and change R_f to 20 kΩ.
5 0.45; 0.12; 0.18; $V_{OUT} = -3.03$ V
6 The slope decreases to ±6.06 mV/μs, which results in a peak-to-peak output of 3.03 V.
7 The output voltage is doubled.
8 1.59 kHz
9 6.06 V peak-to-peak
10 8.34 kHz
11 2.57 kHz
12 Increase f_{c2} by reducing the resistor and/or capacitor values.
13 7.33 V
14 17.5 W

TRUE/FALSE QUIZ

1. T **2.** T **3.** F **4.** F **5.** F **6.** T **7.** T **8.** F **9.** T **10.** T

SELF-TEST

1. (c) **2.** (a) **3.** (b) **4.** (d) **5.** (a) **6.** (b)
7. (c) **8.** (b) **9.** (a) **10.** (d) **11.** (c) **12.** (c)

PROBLEMS – ODD-NUMBERED ANSWERS

1. **(a)** Maximum negative **(b)** Maximum positive **(c)** Maximum negative
3. See Figure P–30.
5. **(a)** $V_{R1} = 1$ V, $V_{R2} = 1.8$ V **(b)** 127 μA **(c)** −2.8 V
7. −3.57 V; 357 μA
9. −4.06 mV/μs
11. 733 mV
13. 5 kΩ
15. 1.06 kHz
17. Change R_1 to 3.54 kΩ.
19. **(a)** 1.54 kHz **(b)** 7.20 kHz **(c)** 894 Hz

▶ FIGURE P–30

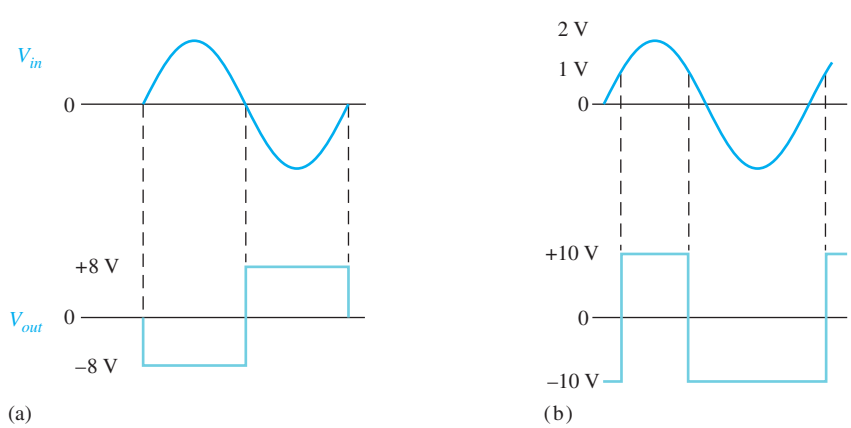

www.EngineeringBooksPdf.com

21. 7.22 V
23. 9.75 V
25. 500 mA
27. 10 mA
29. R_2 is open.
31. No fault

PHOTO CREDITS FOR REOCCURRING IMAGES

CD Icon: Stockbyte/Getty Images; **Computer Chips:** Photodisc/Thinkstock; **Computer:** Jeff Maloney/Photodisc/Getty Images; **Fiber Optic:** discpicture/Shutterstock.

www.EngineeringBooksPdf.com

This page intentionally left blank

www.EngineeringBooksPdf.com

Special-Purpose Op-Amp Circuits

CHAPTER OUTLINE

1 Instrumentation Amplifiers
2 Isolation Amplifiers
3 Operational Transconductance Amplifiers (OTAs)
4 Active Diode Circuits
5 Current Sources and Converters
Application Assignment: Putting Your Knowledge to Work

CHAPTER OBJECTIVES

- Analyze and explain the operation of an instrumentation amplifier
- Analyze and explain the operation of an isolation amplifier
- Analyze and explain the operation of an OTA
- Analyze and explain the operation of active diode circuits
- Analyze and explain three special types of op-amp circuits

KEY TERMS

- Instrumentation amplifier
- Isolation amplifier
- Operational transconductance amplifier (OTA)
- Transconductance
- Clamper
- Limiter

APPLICATION ASSIGNMENT PREVIEW

Medical electronics is an important area of application for electronic devices and one of the most beneficial. The electrocardiograph (ECG) is a common instrument used to monitor the heart function of patients to detect irregularities or abnormalities in the heartbeat. Electrode sensors are placed at points on the body to pick up the small electrical signal produced by the heart. This signal is amplified and fed to a video monitor or chart recorder for analysis. Due to the safety hazards related to electrical equipment, it is important that the patient be protected from the possibility of severe electrical shock. For this reason, the isolation amplifier is used in medical equipment that comes in contact with the human body. After studying this chapter, you should be able to complete the application assignment.

VISIT THE COMPANION WEBSITE

Study aids for this chapter are available at http://www.pearsonhighered.com/floyd/

INTRODUCTION

A general-purpose op-amp, such as the 741, is a versatile and widely used device. However, some specialized IC amplifiers are available that have certain features or characteristics oriented to special applications. Most of these devices are actually derived from the basic op-amp. These special circuits include the instrumentation amplifier that is used in high-noise environments, the isolation amplifier that is used in high-voltage and medical applications, the operational transconductance amplifier (OTA) that is used as a voltage-to-current amplifier, and active diode circuits, which are used in applications such as limiting and peak detection.

Streeter Photography/Alamy

From Chapter 20 of *Electronics Fundamentals: Circuits, Devices, and Applications*, Eighth Edition, Thomas L. Floyd, David M. Buchla.
Copyright © 2010 by Pearson Education, Inc. Published by Pearson Prentice Hall. All rights reserved.

www.EngineeringBooksPdf.com

1 INSTRUMENTATION AMPLIFIERS

An **instrumentation amplifier** is a differential voltage-gain device that amplifies the difference between the voltages existing at its two input terminals. The main purpose of an instrumentation amplifier is to amplify small signals that may be riding on large common-mode voltages. The key characteristics are high input impedance, high common-mode rejection, low output offset, and low output impedance. Instrumentation amplifiers are commonly used in environments with high common-mode noise, such as in data acquisition systems where remote sensing of input variables is required.

After completing this section, you should be able to

- **Analyze and explain the operation of an instrumentation amplifier**
  - Explain how op-amps are connected to form an instrumentation amplifier
  - Describe how the voltage gain is set
  - Discuss applications
  - Describe the features of the AD622 instrumentation amplifier

The Basic Instrumentation Amplifier

As shown in Figure 1, a basic instrumentation amplifier is made up of three operational amplifiers and several resistors. Op-amps A1 and A2 are noninverting configurations that provide high input impedance and voltage gain. Op-amp A3 is used as a unity-gain differential amplifier.

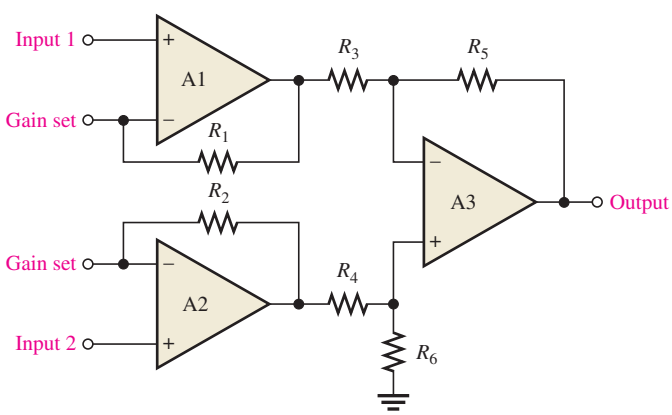

▶ **FIGURE 1**

The basic instrumentation amplifier using three op-amps.

The gain-setting resistor, R_G, is connected externally as shown in Figure 2. Op-amp A1 receives the differential input signal V_{in1} on its noninverting (+) input and amplifies this signal with a voltage gain of

$$A_v = 1 + \frac{R_1}{R_G}$$

Op-amp A1 also has V_{in2} as an input signal to its inverting (−) input through op-amp A2 and the path formed by R_2 and R_G. The input signal V_{in2} is amplified by op-amp A1 with a voltage gain of

$$A_v = \frac{R_1}{R_G}$$

This icon indicates selected websites for further information on topics in this section. See the Companion Website provided with this text.

www.EngineeringBooksPdf.com

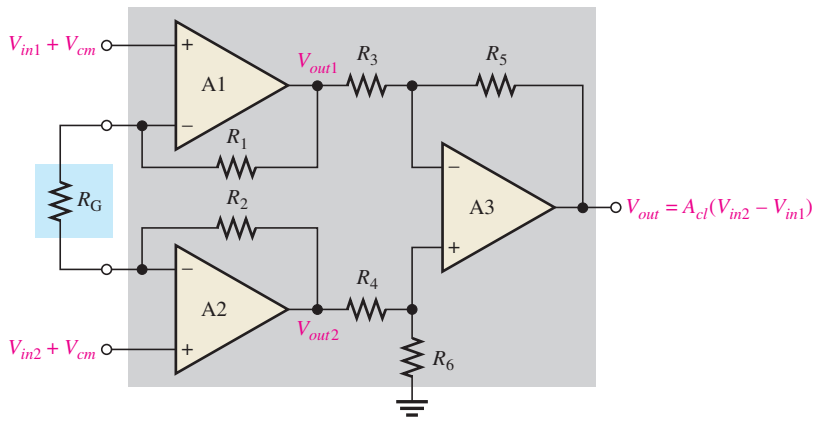

FIGURE 2

The instrumentation amplifier with the external gain-setting resistor R_G. Differential and common-mode signals are indicated.

Also, the common-mode voltage, V_{cm}, on the noninverting input is amplified by the small common-mode gain of op-amp A1. (A_{cm} is typically less than 1.) The total output voltage of op-amp A1 is

$$V_{out1} = \left(1 + \frac{R_1}{R_G}\right)V_{in1} - \left(\frac{R_1}{R_G}\right)V_{in2} + V_{cm}$$

A similar analysis can be applied to op-amp A2 and results in the following output expression:

$$V_{out2} = \left(1 + \frac{R_2}{R_G}\right)V_{in2} - \left(\frac{R_2}{R_G}\right)V_{in1} + V_{cm}$$

Op-amp A3 has V_{out1} on one of its inputs and V_{out2} on the other. Therefore, the differential input voltage to op-amp A3 is $V_{out2} - V_{out1}$.

$$V_{out2} - V_{out1} = \left(1 + \frac{R_2}{R_G} + \frac{R_1}{R_G}\right)V_{in2} - \left(1 + \frac{R_2}{R_G} + \frac{R_1}{R_G}\right)V_{in1} + V_{cm} - V_{cm}$$

For $R_1 = R_2 = R$,

$$V_{out2} - V_{out1} = \left(1 + \frac{2R}{R_G}\right)V_{in2} - \left(1 + \frac{2R}{R_G}\right)V_{in1} + V_{cm} - V_{cm}$$

Notice that, since the common-mode voltages (V_{cm}) are equal, they cancel each other. Factoring out the differential gain gives the following expression for the differential input to op-amp A3:

$$V_{out2} - V_{out1} = \left(1 + \frac{2R}{R_G}\right)(V_{in2} - V_{in1})$$

Op-amp A3 has unity gain because $R_3 = R_5 = R_4 = R_6$ and $A_v = R_5/R_3 = R_6/R_4$. Therefore, the final output of the instrumentation amplifier (the output of op-amp A3) is

$$V_{out} = 1(V_{out2} - V_{out1}) = \left(1 + \frac{2R}{R_G}\right)(V_{in2} - V_{in1})$$

The closed-loop gain is

$$A_{cl} = \frac{V_{out}}{V_{in2} - V_{in1}}$$

$$\boldsymbol{A_{cl} = 1 + \frac{2R}{R_G}}$$ **Equation 1**

where $R_1 = R_2 = R$. Equation 1 shows that the gain of the instrumentation amplifier can be set by the value of the external resistor R_G when R_1 and R_2 have known fixed values.

www.EngineeringBooksPdf.com

The external gain-setting resistor R_G can be calculated for a desired voltage gain by using Equation 1.

Equation 2

$$R_G = \frac{2R}{A_{cl} - 1}$$

Instrumentation amplifiers in which the gain is set to specific values using a binary input instead of a resistor are also available.

EXAMPLE 1

Determine the value of the external gain-setting resistor R_G for a certain IC instrumentation amplifier with $R_1 = R_2 = 25\ \text{k}\Omega$. The closed-loop voltage gain is to be 500.

Solution

$$R_G = \frac{2R}{A_{cl} - 1} = \frac{50\ \text{k}\Omega}{500 - 1} \cong \mathbf{100\ \Omega}$$

*Related Problem**

What value of external gain-setting resistor is required for an instrumentation amplifier with $R_1 = R_2 = 39\ \text{k}\Omega$ to produce a gain of 325?

*Answers are at the end of the chapter.

Applications

As previously mentioned, an instrumentation amplifier is normally used to measure small differential signal voltages that may be superimposed on a common-mode voltage often much larger than the signal voltage. Applications include situations where a quantity is sensed by a remote device, such as a temperature- or pressure-sensitive transducer, and the resulting small electrical signal is sent over a long line subject to electrical noise that produces common-mode voltages in the line. The instrumentation amplifier at the end of the line must amplify the small signal from the remote sensor and reject the large common-mode voltage. Figure 3 illustrates this.

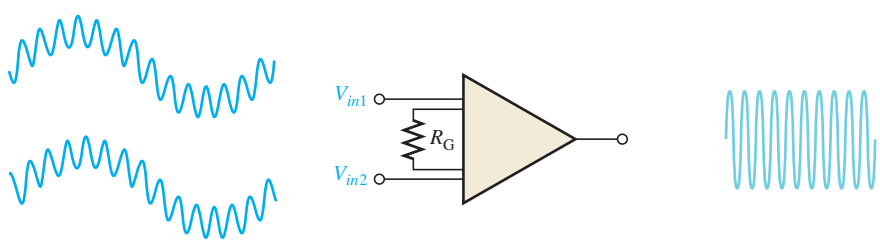

Small differential high-frequency signal riding on a larger low-frequency common-mode signal

Instrumentation amplifier

Amplified differential signal. No common-mode signal.

▶ **FIGURE 3**

Illustration of the rejection of large common-mode voltages and the amplification of smaller signal voltages by an instrumentation amplifier.

A Specific Instrumentation Amplifier

A representative device, the INA333, is shown in Figure 4, where IC pin numbers are given for reference. This instrumentation amplifier is based on a classic design of three op-amps, but it has exceptional precision due to laser-trimmed resistors and excellent noise rejection. Some features of the INA333 are as follows:

- The voltage gain can be adjusted from 2 to 1000 with an external resistor R_G.
- There is unity gain with no external resistor.
- The input impedance is 100 GΩ.

www.EngineeringBooksPdf.com

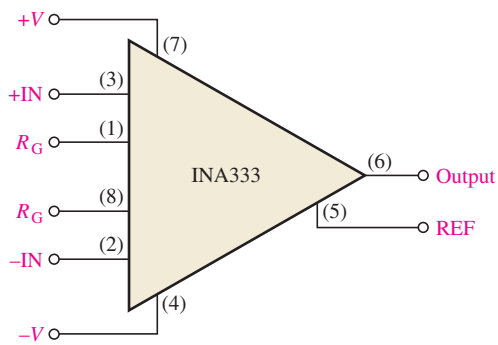

FIGURE 4

The INA333 instrumentation amplifier.

- The common-mode rejection ratio (CMRR) is a minimum of 100 dB at a gain of 10. (Recall that a higher CMRR means better rejection of common-mode voltages.)
- It has a bandwidth of 35 kHz at a gain of 10.
- It has extremely low bias current (200 pA max) and can be operated from as little as 1.8 V, making it an excellent choice for portable applications.

Setting the Voltage Gain For the INA333. an external resistor must be used to achieve a voltage gain greater than unity, as indicated in Figure 5. Resistor R_G is connected between the R_G terminals (pins 1 and 8) as indicated in Figure 5. No resistor is required for unity gain. Resistor R_G is selected for the desired gain based on the following formula:

$$R_G = \frac{100\ \text{k}\Omega}{A_v - 1}$$

Equation 3

Note that this formula is the same as Equation 2 for the classic three op-amp configuration where the internal resistors R_1 and R_2 are each 50 kΩ.

Gain versus Frequency The graph in Figure 6 shows the gain versus frequency for gains of 1, 10, 100, and 1000. As you can see, the bandwidth decreases as the gain increases.

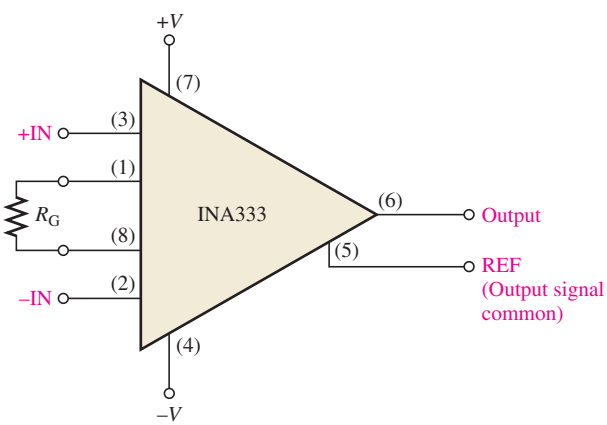

FIGURE 5

The INA333 with a gain-setting resistor.

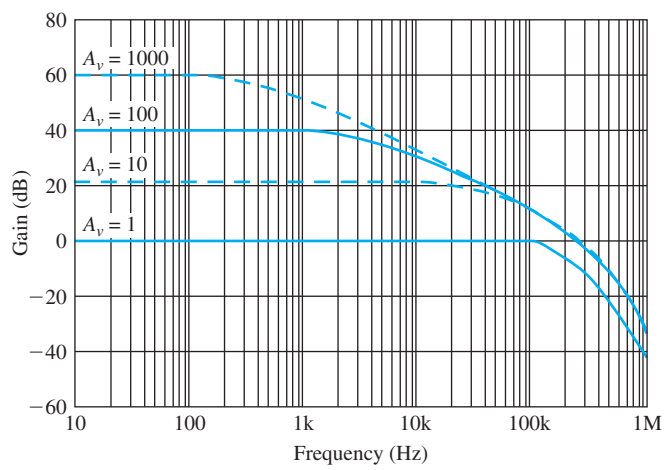

FIGURE 6

Gain versus frequency for the INA333 instrumentation amplifier.

www.EngineeringBooksPdf.com

EXAMPLE 2

Calculate the voltage gain and determine the bandwidth using the graph in Figure 6 for the instrumentation amplifier in Figure 7.

▶ **FIGURE 7**

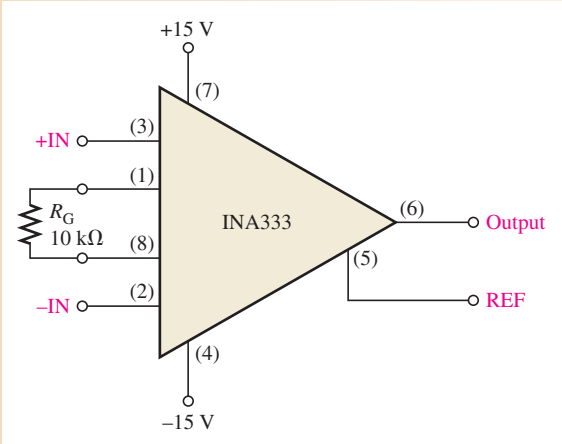

Solution Determine the voltage gain as follows:

$$R_G = \frac{100\,\text{k}\Omega}{A_v - 1}$$

$$A_v - 1 = \frac{100\,\text{k}\Omega}{R_G}$$

$$A_v = \frac{100\,\text{k}\Omega}{10\,\text{k}\Omega} + 1 = \mathbf{11}$$

From the graph in Figure 6, the approximate bandwidth is

$$BW \cong \mathbf{35\,kHz}$$

Related Problem Modify the circuit in Figure 7 for a gain of 38.

SECTION 1 CHECKUP
Answers are at the end of the chapter.

1. What is the main purpose of an instrumentation amplifier and what are three of its key characteristics?
2. What components do you need to construct a basic instrumentation amplifier?
3. How is the gain determined in a basic instrumentation amplifier?
4. In a certain INA333 configuration, $R_G = 15\,\text{k}\Omega$. What is the voltage gain?

2 ISOLATION AMPLIFIERS

An isolation amplifier provides dc isolation between input and output. It is used for the protection of human life or sensitive equipment in those applications where hazardous power-line leakage or high-voltage transients are possible. The principal areas of application are in medical instrumentation, power plant instrumentation, industrial processing, and automated testing.

www.EngineeringBooksPdf.com

After completing this section, you should be able to

- **Analyze and explain the operation of an isolation amplifier**
  - Explain the basic configuration of an isolation amplifier
  - Discuss an application in medical electronics
  - Discuss the IS0124 and 3656KG isolation amplifiers

A Basic Capacitor-Coupled Isolation Amplifier

An **isolation amplifier** is a device that consists of two electrically isolated stages. The input stage and the output stage are separated from each other by an isolation barrier so that a signal must be processed in order to be coupled across the isolation barrier. Some isolation amplifiers use optical coupling or transformer coupling to provide isolation between the stages. However, most modern isolation amplifiers use capacitive coupling for isolation. Each stage has separate supply voltages and grounds so that there are no common electrical paths between them. A simplified block diagram for a typical isolation amplifier is shown in Figure 8. Notice two different ground symbols are used to reinforce the concept of stage separation.

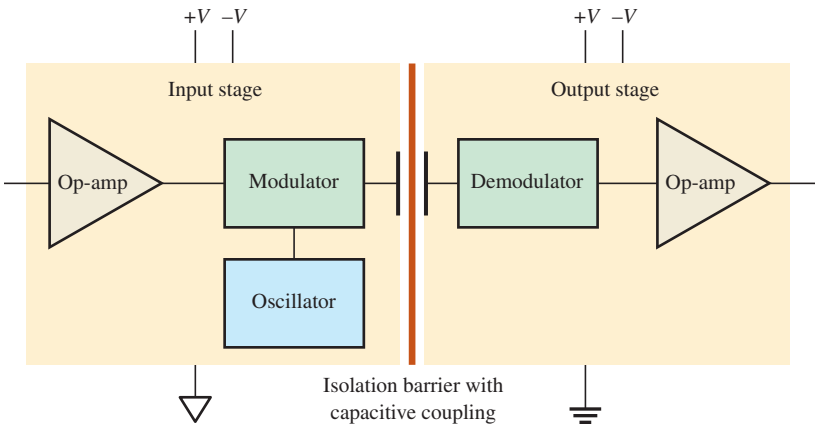

FIGURE 8

Simplified block diagram of a typical isolation amplifier.

The input stage consists of an amplifier, an oscillator, and a modulator. **Modulation** is the process of allowing a signal containing information to modify a characteristic of another signal, such as amplitude, frequency, or pulse width, so that the information in the first signal is also contained in the second. In this case, the modulator uses a high-frequency square-wave oscillator to modify the original signal. A small-value capacitor in the isolation barrier is used to couple the lower-frequency modulated signal or dc voltage from the input to the output. Without modulation, prohibitively high-value capacitors would be necessary with a resulting degradation in the isolation between the stages. The output stage consists of a demodulator that extracts the original input signal from the modulated signal so that the original signal from the input stage is back to its original form.

The high-frequency oscillator output in Figure 8 can be either amplitude or pulse-width modulated by the signal from the input amplifier. In amplitude modulation, the amplitude of the oscillator output corresponds to the variations of the input signal, as indicated in Figure 9(a), which uses one cycle of a sine wave for illustration.

In pulse-width modulation, the duty cycle of the oscillator output is varied by changing the pulse width corresponding to the variations of the input signal. An isolation amplifier using pulse-width modulation is represented in Figure 9(b). Although it uses a relatively

www.EngineeringBooksPdf.com

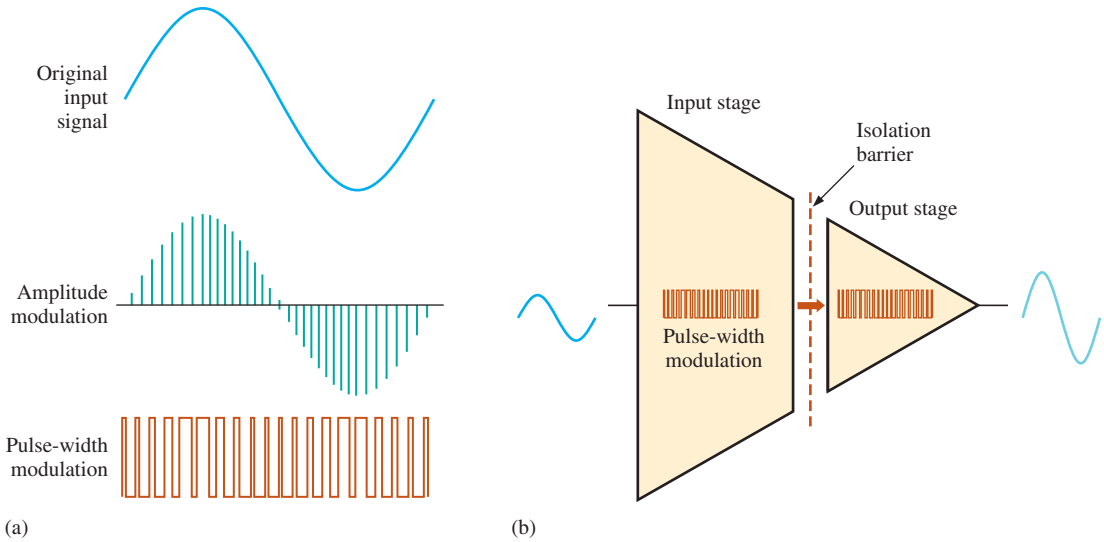

▲ **FIGURE 9**

Modulation.

complex process internally, an isolation amplifier is still just an amplifier and is simple to use. When dc supply voltages and an input signal are applied, an amplified output signal is the result. The isolation function itself is an unseen process.

EXAMPLE 3

The IS0124 is an integrated circuit isolation amplifier. It has a voltage gain of 1 and operates on positive and negative dc supply voltages for both stages. This device uses pulse-width modulation (sometimes called duty cycle modulation) with a frequency of 500 kHz. It is recommended that the supply voltages be decoupled with external capacitors to reduce noise. Show the appropriate connections.

Solution

The manufacturer recommends a 1 μF capacitor from each dc power supply pin to ground. This is shown in Figure 10 where the supply voltages are ± 15 V.

▶ **FIGURE 10**

Basic signal and power connections for an IS0124 isolation amplifier.

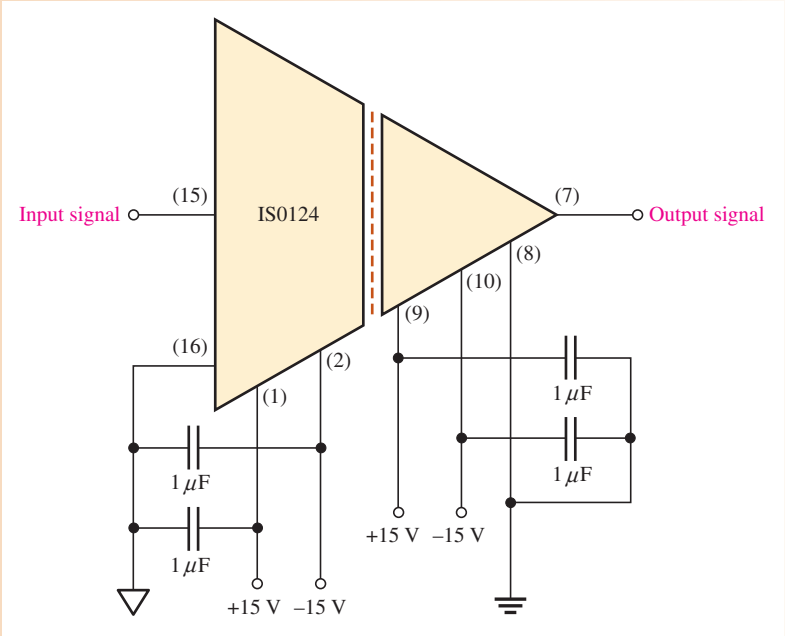

www.EngineeringBooksPdf.com

Related Problem The output signal may have some ripple introduced by the demodulation process. How could this ripple be removed?

A Transformer-Coupled Isolation Amplifier

The Burr-Brown 3656KG is an example of an isolation amplifier that uses transformer coupling to isolate the two stages. Unlike the IS0124, which has a fixed unity gain, the 3656KG provides for external gain adjustment of both stages. A diagram of the 3656KG with external gain resistors and decoupling capacitors is shown in Figure 11.

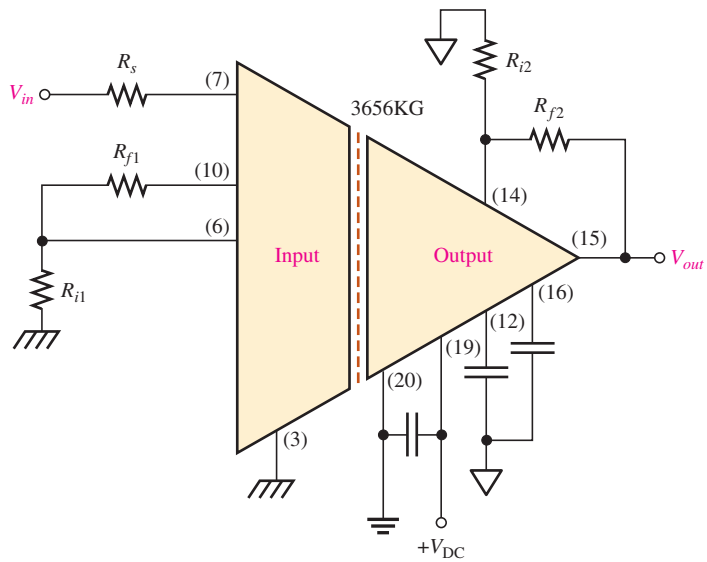

▲ **FIGURE 11**

The 3656KG isolation amplifier.

The voltage gains of both the input stage and the output stage can be set with external resistors connected as shown in the figure. The gain of the input stage is

$$A_{v1} = 1 + \frac{R_{f1}}{R_{i1}}$$ **Equation 4**

The gain of the output stage is

$$A_{v2} = 1 + \frac{R_{f2}}{R_{i2}}$$ **Equation 5**

The total amplifier gain is the product of the gains of the input and output stages.

$$A_{v(tot)} = A_{v1}A_{v2}$$

EXAMPLE 4 Determine the total voltage gain of the 3656KG isolation amplifier in Figure 12.

Solution The voltage gain of the input stage is

$$A_{v1} = 1 + \frac{R_{f1}}{R_{i1}} = 1 + \frac{22\text{ k}\Omega}{2.2\text{ k}\Omega} = 1 + 10 = 11$$

www.EngineeringBooksPdf.com

▶ FIGURE 12

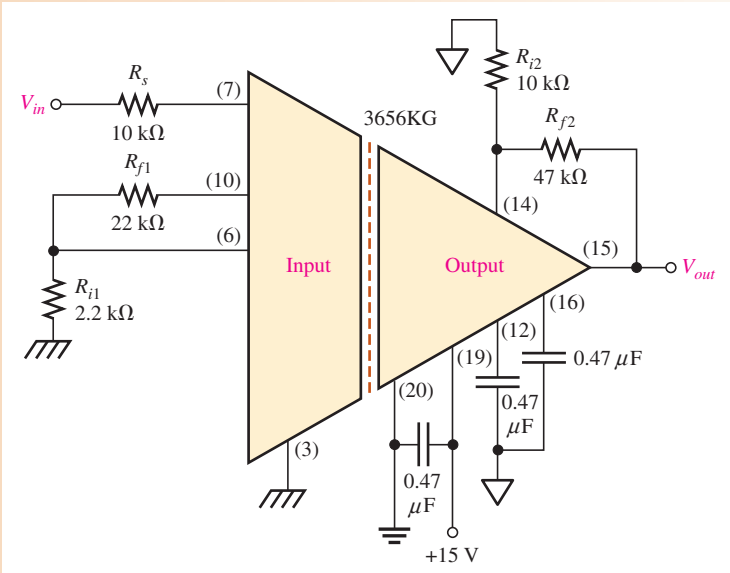

The voltage gain of the output stage is

$$A_{v2} = 1 + \frac{R_{f2}}{R_{i2}} = 1 + \frac{47\text{ k}\Omega}{10\text{ k}\Omega} = 1 + 4.7 = 5.7$$

The total voltage gain of the isolation amplifier is

$$A_{v(tot)} = A_{v1}A_{v2} = (11)(5.7) = \mathbf{62.7}$$

Related Problem Select resistor values in Figure 12 that will produce a total voltage gain of approximately 100.

Applications

As previously mentioned, an isolation amplifier is used in applications that require no common grounds between a transducer and the processing circuits where interfacing to sensitive equipment is required. In chemical, nuclear, and metal-processing industries, for example, millivolt signals typically exist in the presence of large common-mode voltages that can be in the kilovolt range. In this type of environment, the isolation amplifier can amplify small signals from very noisy equipment and provide a safe output to sensitive equipment such as computers.

Another important application is in various types of medical equipment. In medical applications where body functions such as heart rate and blood pressure are monitored, the very small monitored signals are combined with large common-mode signals, such as 60 Hz power-line pickup from the skin. In these situations, without isolation, dc leakage or equipment failure could be fatal. Figure 13 shows a simplified diagram of an isolation amplifier in a cardiac-monitoring application. In this situation, heart signals, which are very small, are combined with much larger common-mode signals caused by muscle noise, electrochemical noise, residual electrode voltage, and 60 Hz power-line pickup from the skin.

The monitoring of fetal heartbeat, as illustrated, is the most demanding type of cardiac monitoring because in addition to the fetal heartbeat that typically generates 50 μV, there is also the mother's heartbeat that typically generates 1 mV. The common-mode voltages

www.EngineeringBooksPdf.com

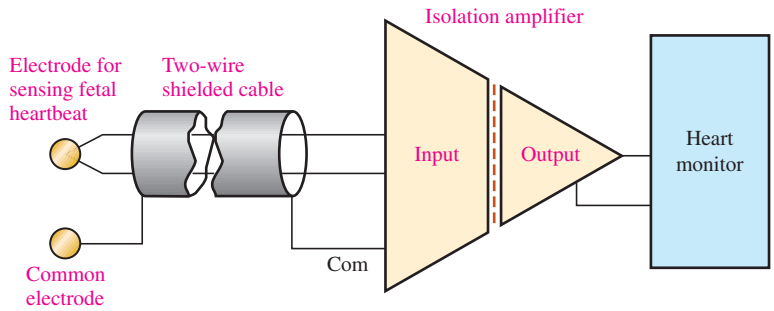

▲ FIGURE 13

Fetal heartbeat monitoring using an isolation amplifier.

can run from about 1 mV to about 100 mV. The CMR (common-mode rejection) of the isolation amplifier separates the signal of the fetal heartbeat from that of the mother's heartbeat and from those common-mode signals. Therefore, the signal from the fetal heartbeat is essentially all that the amplifier sends to the monitoring equipment.

SECTION 2 CHECKUP

1. In what types of applications are isolation amplifiers used?
2. What are the two stages in a typical isolation amplifier and what is the purpose of having two stages?
3. How are the stages in an isolation amplifier connected?
4. What is the purpose of the oscillator in an isolation amplifier?

3 OPERATIONAL TRANSCONDUCTANCE AMPLIFIERS (OTAs)

Conventional op-amps are, as you know, primarily voltage amplifiers in which the output voltage equals the gain times the input voltage. The **operational transconductance amplifier (OTA)** is primarily a voltage-to-current amplifier in which the output current equals the gain times the input voltage.

After completing this section, you should be able to

- **Analyze and explain the operation of an OTA**
  - Identify the OTA symbol
  - Define *transconductance*
  - Discuss the relationship between transconductance and bias current
  - Describe the features of the LM13700 OTA
  - Discuss OTA applications

Figure 14 shows the symbol for an operational transconductance amplifier (OTA). The double-circle symbol at the output represents an output current source that is dependent on a bias current. Like the conventional op-amp, the OTA has two differential input terminals, a high input impedance, and a high CMRR. Unlike the conventional op-amp, the OTA has a bias-current input terminal, a high output impedance, and no fixed open-loop voltage gain.

www.EngineeringBooksPdf.com

▶ FIGURE 14

Symbol for an operational transconductance amplifier (OTA).

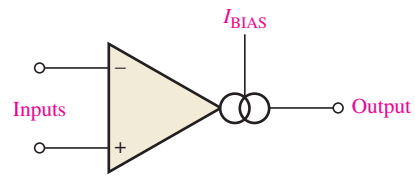

Transconductance

By definition, the **transconductance** of an electronic device is the ratio of the output current to the input voltage. For an OTA, voltage is the input variable and current is the output variable; therefore, the ratio of output current to input voltage is also its gain. Consequently, the voltage-to-current gain of an OTA is the transconductance, g_m.

Equation 6

$$g_m = \frac{I_{out}}{V_{in}}$$

In an OTA, the transconductance is dependent on a constant (K) times the bias current (I_{BIAS}), as indicated in Equation 7. The value of the constant is dependent on the internal circuit design.

Equation 7

$$g_m = KI_{BIAS}$$

The output current is controlled by the input voltage and the bias current as shown by the following formula:

$$I_{out} = g_m V_{in} = KI_{BIAS} V_{in}$$

The relationship of the transconductance and the bias current in an OTA is an important characteristic. The graph in Figure 15 illustrates a typical relationship. The constant of proportionality, K, is the ratio of the transconductance to the bias current. In this case, K is approximately 16 μS/μA.

▶ FIGURE 15

Example of a transconductance versus bias current graph for a typical OTA. The exact location of the line depends on the particular device and the temperature.

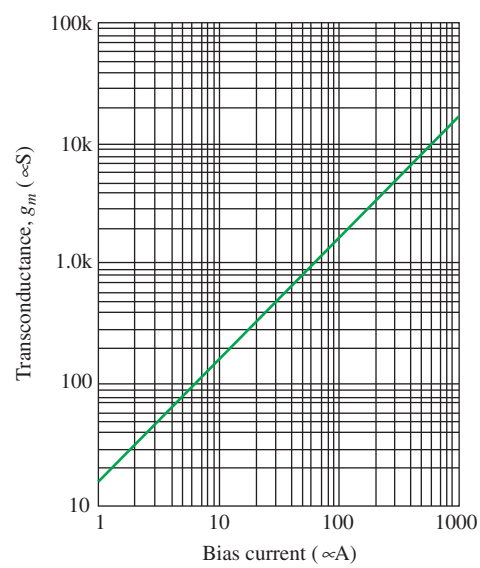

EXAMPLE 5

If an OTA has a $g_m = 1000\ \mu$S, what is the output current when the input voltage is 25 mV?

Solution

$$I_{out} = g_m V_{in} = (1000\ \mu\text{S})(25\ \text{mV}) = \mathbf{25\ \mu A}$$

Related Problem

Based on $K \cong 16\ \mu$S/μA, calculate the approximate bias current required to produce $g_m = 1000\ \mu$S.

www.EngineeringBooksPdf.com

Basic OTA Circuits

Figure 16 shows the OTA used as an inverting amplifier with a fixed voltage gain. The voltage gain is set by the transconductance and the load resistance as follows.

$$V_{out} = I_{out}R_L$$

Dividing both sides by V_{in},

$$\frac{V_{out}}{V_{in}} = \left(\frac{I_{out}}{V_{in}}\right)R_L$$

Since V_{out}/V_{in} is the voltage gain and $I_{out}/V_{in} = g_m$,

$$A_v = g_m R_L$$

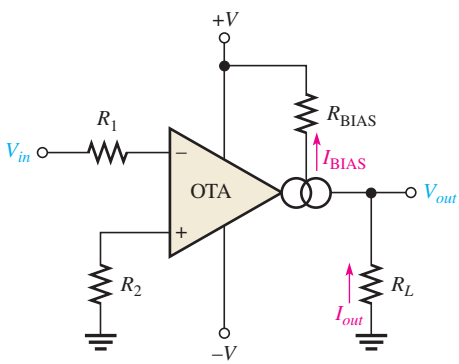

FIGURE 16

The OTA as an inverting amplifier with a fixed voltage gain.

The transconductance of the amplifier in Figure 16 is determined by the amount of bias current, which is set by the dc supply voltages and the bias resistor R_{BIAS}.

One of the most useful features of an OTA is that the voltage gain can be controlled by the amount of bias current. This can be done manually, as shown in Figure 17(a), by using a variable resistor in series with R_{BIAS} in the circuit of Figure 16. By changing the resistance, you can produce a change in I_{BIAS}, which changes the transconductance. A change in the transconductance changes the voltage gain. The voltage gain can also be controlled with an externally applied variable voltage, as shown in Figure 17(b). A variation in the applied bias voltage causes a change in the bias current.

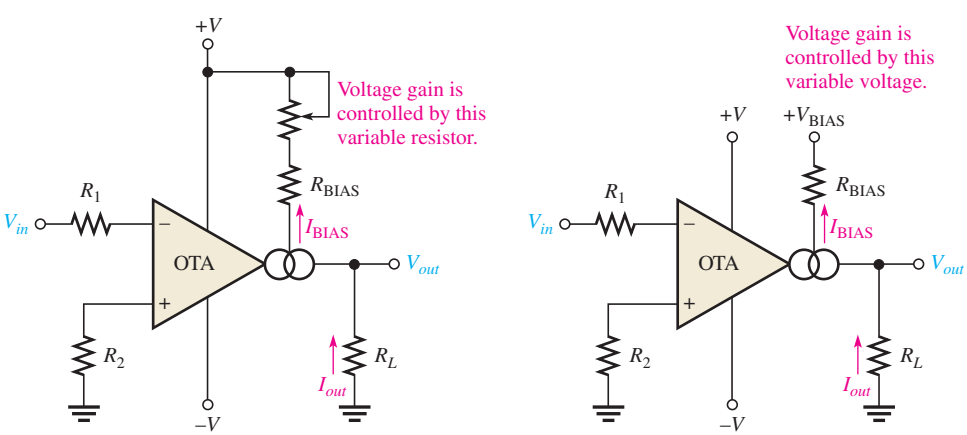

(a) Amplifier with resistance-controlled gain

(b) Amplifier with voltage-controlled gain

FIGURE 17

The OTA as an inverting amplifier with a variable-voltage gain.

www.EngineeringBooksPdf.com

A Specific OTA

The LM13700 is a typical OTA. It is a dual-device package containing two OTAs and buffer circuits. Figure 18 shows the pin configuration using a single OTA in the package. The maximum dc supply voltages are ± 18 V, and its transconductance characteristic happens to be the same as indicated by the graph in Figure 15. For an LM13700, the bias current is determined by the following formula:

$$I_{BIAS} = \frac{+V_{BIAS} - (-V) - 1.4\text{ V}}{R_{BIAS}}$$

The 1.4 V is due to the internal circuit where a base-emitter junction and a diode connect the external R_{BIAS} with the negative supply voltage $(-V)$. The positive bias voltage, $+V_{BIAS}$, may be obtained from the positive supply voltage, $+V$.

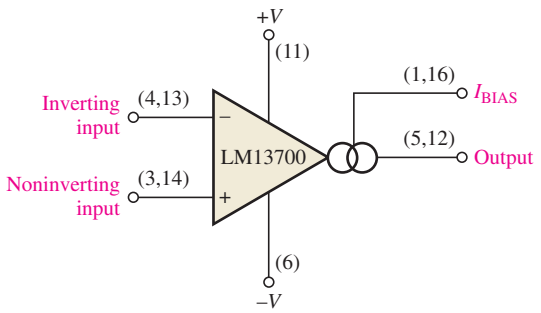

▲ **FIGURE 18**

An LM13700 OTA. There are two in an IC package. The buffer transistors are not shown. Pin numbers for both OTAs are given in parentheses.

Not only does the transconductance of an OTA vary with bias current, but so do the input and output resistances. Both the input and output resistances decrease as the bias current increases, as shown in Figure 19.

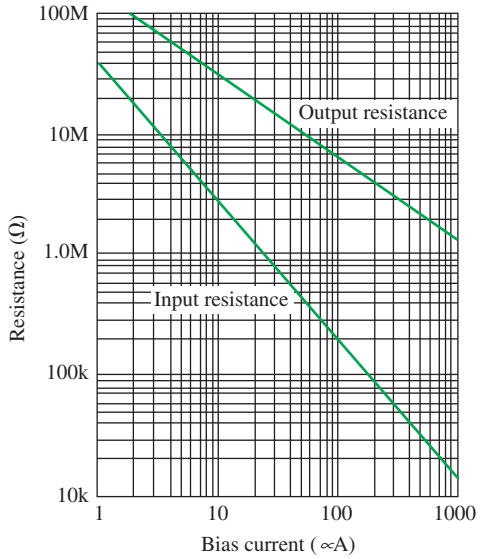

▲ **FIGURE 19**

Example of input and output resistances versus bias current.

www.EngineeringBooksPdf.com

EXAMPLE 6

The OTA in Figure 20 is connected as an inverting fixed-gain amplifier where $+V_{BIAS} = +V$. Determine the approximate voltage gain.

▶ FIGURE 20

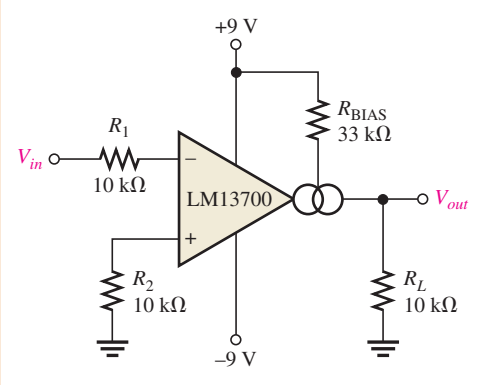

Solution Calculate the bias current. Then use $K \cong 16\ \mu S/\mu A$ to determine the value of transconductance.

$$I_{BIAS} = \frac{+V_{BIAS} - (-V) - 1.4\text{ V}}{R_{BIAS}} = \frac{9\text{ V} - (-9\text{ V}) - 1.4\text{ V}}{33\text{ k}\Omega} = 503\ \mu A$$

$$g_m = KI_{BIAS} \cong (16\ \mu S/\mu A)(503\ \mu A) = 8.05 \times 10^3\ \mu S$$

Using this value of g_m, calculate the voltage gain.

$$A_v = g_m R_L \cong (8.05 \times 10^3\ \mu S)(10\text{ k}\Omega) = \mathbf{80.5}$$

Related Problem If the OTA in Figure 20 is operated with dc supply voltages of ±12 V, will this change the voltage gain and, if so, to what value?

Two OTA Applications

Amplitude Modulator Figure 21 illustrates an OTA connected as an amplitude modulator. The voltage gain is varied by applying a modulation voltage to the bias input. When a constant-amplitude input signal is applied, the amplitude of the output signal will vary according to the modulation voltage on the bias input. The gain is dependent on bias current, and bias current is related to the modulation voltage by the following relationship:

$$I_{BIAS} = \frac{V_{MOD} - (-V) - 1.4\text{ V}}{R_{BIAS}}$$

This modulating action is shown in Figure 21 for a higher-frequency sinusoidal input voltage and a lower-frequency sinusoidal modulating voltage.

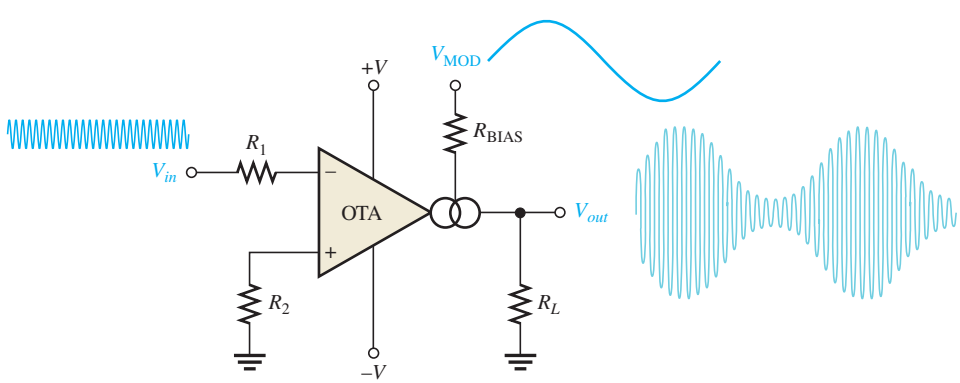

◀ FIGURE 21

The OTA as an amplitude modulator.

www.EngineeringBooksPdf.com

EXAMPLE 7

The input to the OTA amplitude modulator in Figure 22 is a 50 mV peak-to-peak, 1 MHz sine wave. Determine the output signal, given the modulation voltage shown is applied to the bias input.

▶ FIGURE 22

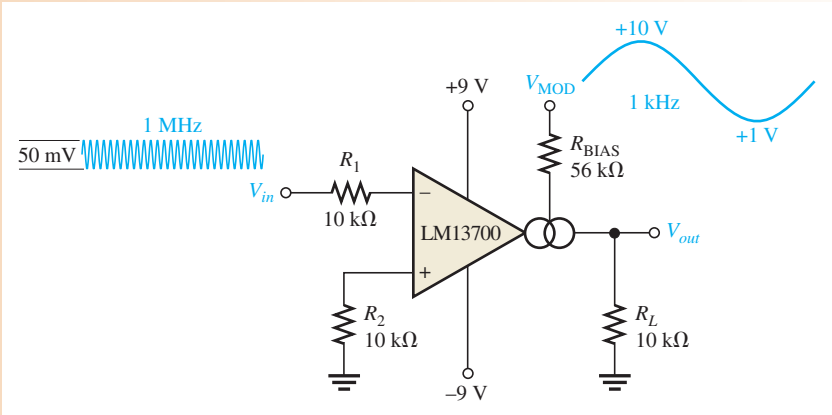

Solution The maximum voltage gain is when I_{BIAS}, and thus g_m, is maximum. This occurs at the maximum peak of the modulating voltage, V_{MOD}.

$$I_{BIAS(max)} = \frac{V_{MOD(max)} - (-V) - 1.4\text{ V}}{R_{BIAS}} = \frac{10\text{ V} - (-9\text{ V}) - 1.4\text{ V}}{56\text{ k}\Omega} = 314\ \mu\text{A}$$

The constant K is approximately 16 μS/μA.

$$g_m = KI_{BIAS(max)} \cong (16\ \mu\text{S}/\mu\text{A})(314\ \mu\text{A}) = 5.02\text{ mS}$$
$$A_{v(max)} = g_m R_L \cong (5.02\text{ mS})(10\text{ k}\Omega) = 50.2$$
$$V_{out(max)} = A_{v(max)}V_{in} \cong (50.2)(50\text{ mV}) = 2.51\text{ V}$$

The minimum bias current is

$$I_{BIAS(min)} = \frac{V_{MOD(min)} - (-V) - 1.4\text{ V}}{R_{BIAS}} = \frac{1\text{ V} - (-9\text{ V}) - 1.4\text{ V}}{56\text{ k}\Omega} = 154\ \mu\text{A}$$
$$g_m = KI_{BIAS(min)} \cong (16\ \mu\text{S}/\mu\text{A})(154\ \mu\text{A}) = 2.46\text{ mS}$$
$$A_{v(min)} = g_m R_L \cong (2.46\text{ mS})(10\text{ k}\Omega) = 24.6$$
$$V_{out(min)} = A_{v(min)}V_{in} \cong (24.6)(50\text{ mV}) = 1.23\text{ V}$$

The resulting output voltage is shown in Figure 23.

▶ FIGURE 23

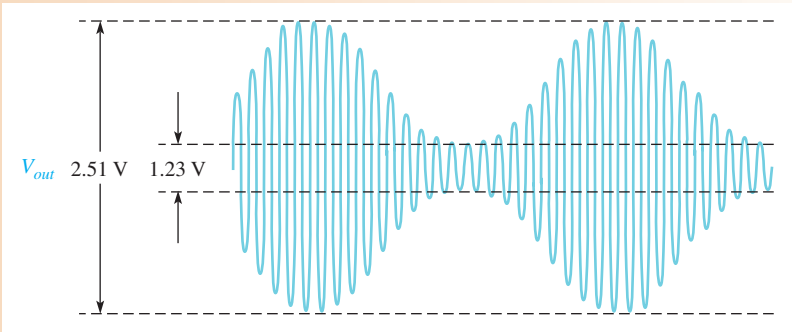

Related Problem Repeat this example with the sinusoidal modulating signal replaced by a square wave with the same maximum and minimum levels and a bias resistor of 39 kΩ.

www.EngineeringBooksPdf.com

Schmitt Trigger Figure 24 shows an OTA used in a Schmitt trigger configuration. Basically, a Schmitt trigger is a comparator with hysteresis where the input voltage is large enough to drive the device into its saturated states. When the input voltage exceeds a certain threshold value or trigger point, the device switches to one of its saturated output states. When the input falls back below another threshold value, the device switches back to its other saturated output state.

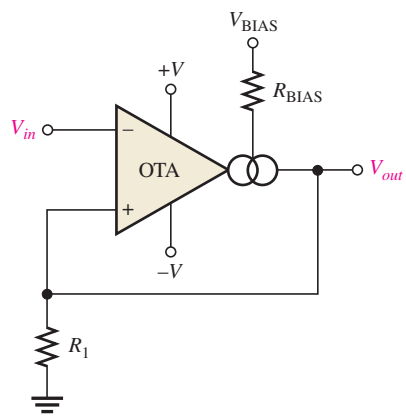

FIGURE 24

The OTA as a Schmitt trigger.

In the case of the OTA Schmitt trigger, the threshold levels are set by the current through resistor R_1. The maximum output current in an OTA equals the bias current. Therefore, in the saturated output states, $I_{out} = I_{BIAS}$. The maximum positive output voltage is $I_{out}R_1$, and this voltage is the positive threshold value or upper trigger point. When the input voltage exceeds this value, the output switches to its maximum negative voltage, which is $-I_{out}R_1$. Since $I_{out} = I_{BIAS}$, the trigger points can be controlled by the bias current. Figure 25 illustrates this operation.

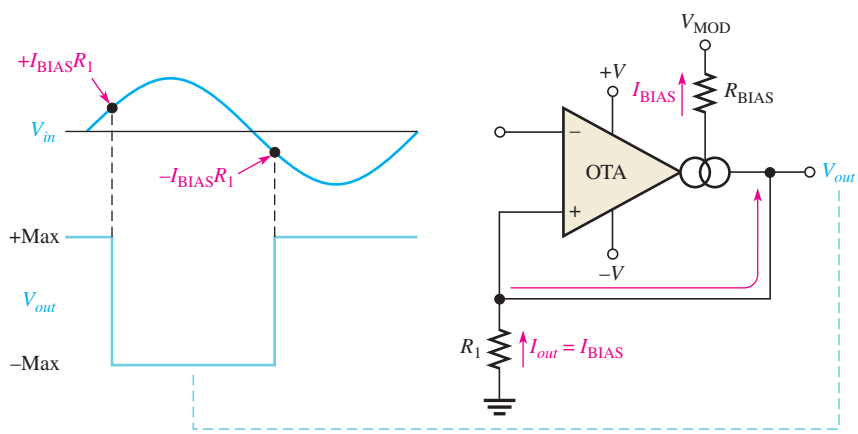

FIGURE 25

Basic operation of the OTA Schmitt trigger.

SECTION 3 CHECKUP

1. What does OTA stand for?
2. If the bias current in an OTA is increased, does the transconductance increase or decrease?
3. What happens to the voltage gain if the OTA is connected as a fixed-voltage amplifier and the supply voltages are increased?
4. What happens to the voltage gain if the OTA is connected as a variable-gain voltage amplifier and the voltage at the bias terminal is decreased?

www.EngineeringBooksPdf.com

4 ACTIVE DIODE CIRCUITS

The term *active* in relation to a circuit indicates that a gain element is used, in this case, an op-amp. Circuits using both op-amps and diodes are introduced, including the clamper, the limiter, and the peak detector.

After completing this section, you should be able to

- **Analyze and explain the operation of active diode circuits**
  - Describe the operation of an active clamping circuit
  - Describe the operation of an active limiting circuit
  - Discuss the basic peak detector

Clamping Circuits

The Basic Diode Clamper The clamping circuit or **clamper** is used to add a dc level to a signal voltage. Clampers are often referred to as *dc restorers* because they are used to restore a dc level to a signal that has been processed through capacitively coupled amplifiers. To illustrate the basic principle of clamper operation, Figure 26 shows a simple passive diode clamping circuit that adds a positive dc level to the input signal. To understand the operation of this circuit, start with the first negative half-cycle of the input voltage. When the input initially goes negative, the diode is forward-biased, allowing the capacitor to charge to *near* the peak of the input, as shown in Figure 26(a). Just past the negative peak, the diode becomes reverse-biased because the cathode is held to $V_{p(in)} - 0.7$ V by the charge on the capacitor.

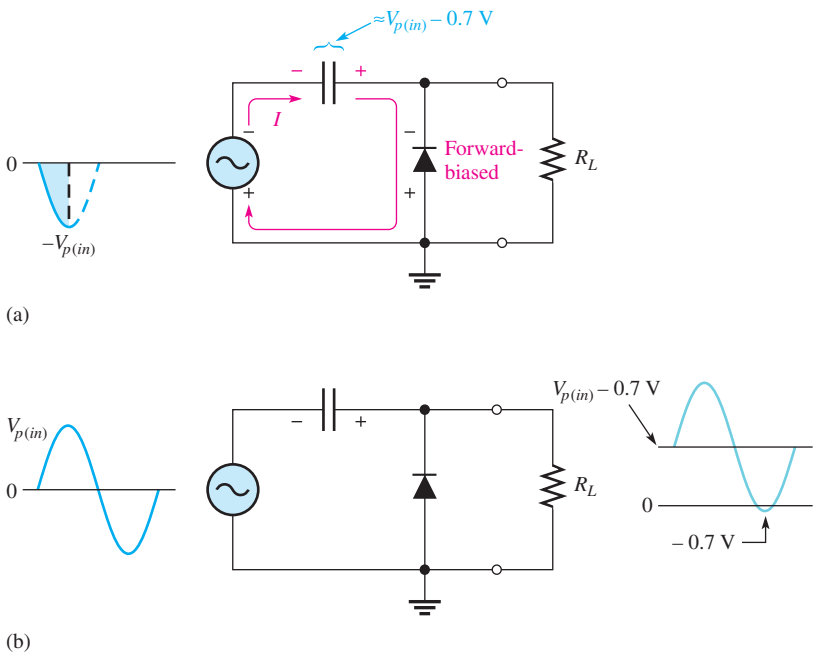

▶ **FIGURE 26**

Positive clamping operation with a passive clamper.

The capacitor can discharge only through R_L. Thus, from the peak of one negative half-cycle to the next, the capacitor discharges very little. The amount that is discharged depends on the value of R_L and the period of the input signal. For good clamping action, the

www.EngineeringBooksPdf.com

RC time constant should be at least ten times the period of the input. The net effect of the clamping action is that the capacitor retains a charge approximately equal to the peak value of the input less the diode drop. The dc voltage of the capacitor adds to the input voltage by superposition, as shown in Figure 26(b). If the diode is turned around, a negative dc voltage is added to the input signal, as shown in Figure 27.

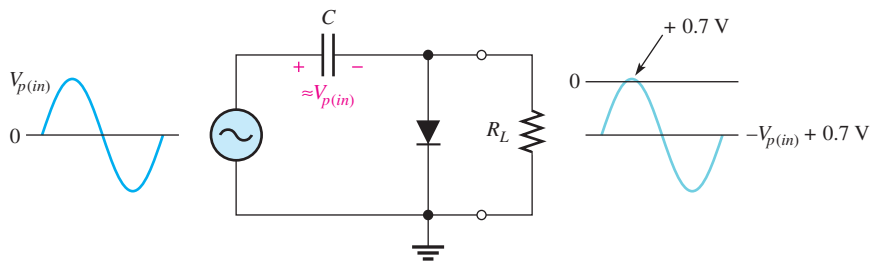

FIGURE 27

Negative clamping.

An Active Clamping Circuit A positive clamper with an op-amp and a diode is shown in Figure 28. This circuit overcomes a couple of disadvantages of the passive clamper. The use of the op-amp eliminates the −0.7 V peak found in the positive passive clamper output, and it prevents loading the input source when the diode is forward-biased.

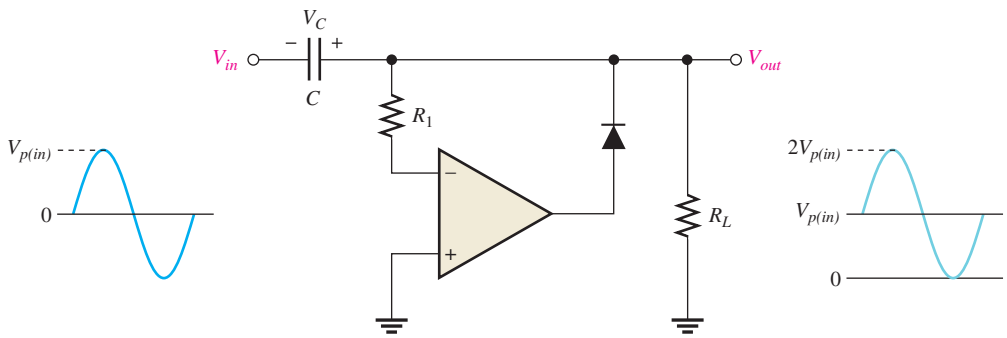

FIGURE 28

An active clamping circuit and its operation.

The operation is as follows. On the first negative half-cycle of the input voltage, V_{in}, the differential input is positive, which produces a positive output voltage. Because of the feedback loop, the positive op-amp output voltage forward-biases the diode, allowing the capacitor to quickly charge. The maximum voltage across the capacitor occurs at the negative peak of the input with the polarity shown in Figure 28. This capacitor voltage adds to the input voltage so that the minimum peak of the output voltage, V_{out}, is at 0 V as indicated.

During the time between the minimum output peaks of V_{out} and after the capacitor is charged, the differential input voltage to the op-amp becomes negative (inverting input more positive than noninverting input). As a result, the output of the op-amp becomes negative and reverse-biases the diode, thus breaking the feedback path. The only change in the capacitor voltage during this time is due to a very small discharge through R_L. At each minimum peak of the signal, the diode is forward-biased for a very short time to replenish the voltage across the capacitor.

The positive clamper can be converted to a negative clamper by reversing the diode. In this case, the output waveform would occur below 0 V with its maximum peaks at zero, as

www.EngineeringBooksPdf.com

illustrated in Figure 29(a). Also, the clamping level can be changed to a value other than 0 V by connecting a reference voltage source at the + input of the op-amp, as shown in Figure 29(b) and illustrated in Example 8.

▶ FIGURE 29

Other active clamper configurations.

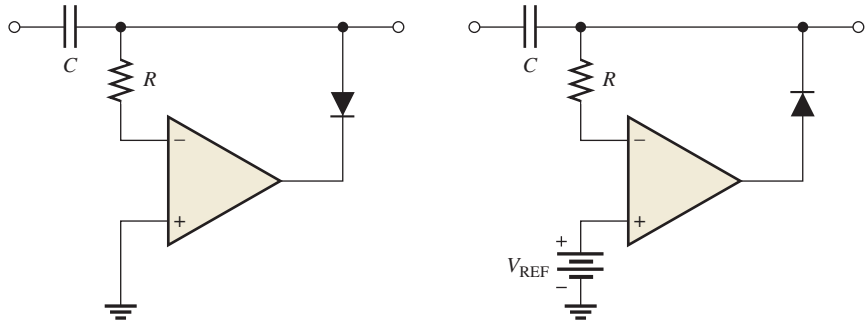

(a) Active negative clamper

(b) Active positive clamper with nonzero reference

EXAMPLE 8

Determine the output voltage for the clamping circuit in Figure 30 for the input voltage shown.

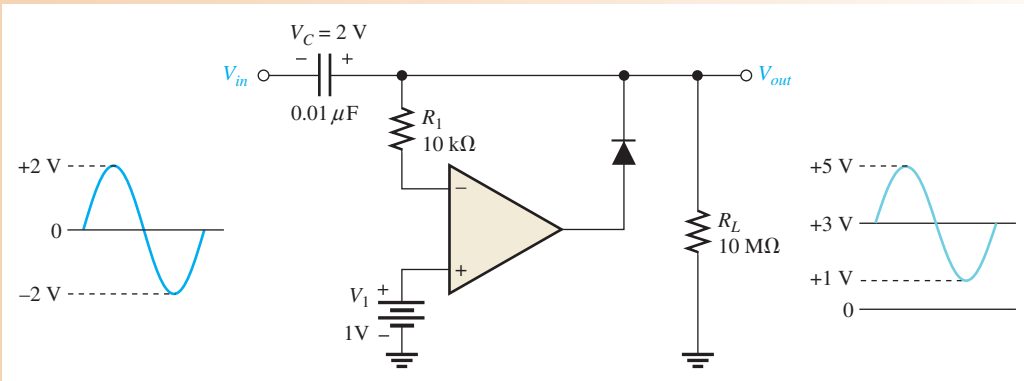

▲ FIGURE 30

Solution This is a positive clamping circuit and the reference voltage is +1 V, so the minimum peak value of the output voltage is also +1 V. The voltage is effectively shifted by 3 V, as indicated in the figure.

Related Problem What is the maximum peak value of the output in Figure 30 if the reference voltage is +2.5 V?

Open the Multisim file E20-08; files are found at www.pearsonhighered.com/floyd/. Compare the waveform in the example with the waveform in Multisim. Try changing the voltage and polarity of V1 and see what happens.

A Clamper Application A clamping circuit is used in a function generator to move the dc level to any desired point. A better term than *clamping circuit* would be *dc level control circuit* because this is precisely what the circuit does. The front-panel control on the function generator is labeled *DC Offset*. Figure 31 shows the circuit. Resistors R_2, R_3, and R_4 form a voltage divider, with the output taken from R_3 (the potentiometer). As R_3 is varied, the clamping level is varied from a negative voltage to a positive voltage. This produces a variable clamping level that either adds or subtracts a dc voltage from V_s.

www.EngineeringBooksPdf.com

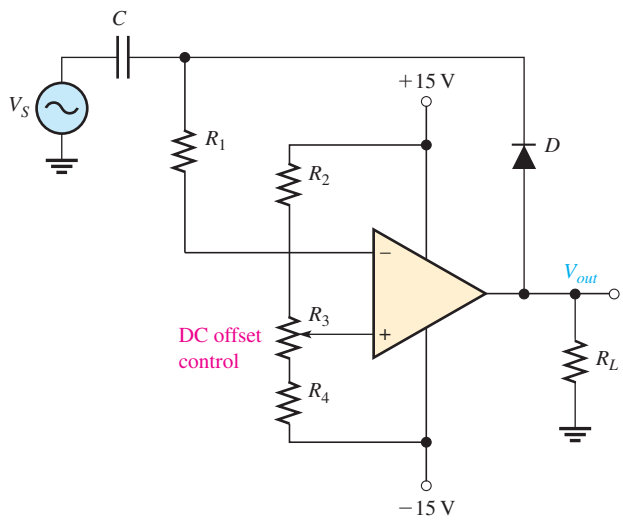

◀ FIGURE 31

A variable clamping level as used in the DC offset control of a function generator.

Limiting Circuits

The Basic Diode Limiter Diode **limiters** (also called clippers) cut off or limit voltage above or below specified voltage levels. To understand how a limiter works, let's first look at a simple passive positive limiter such as the one shown in Figure 32(a). When the input signal is positive, the diode is reverse-biased and the output voltage looks like the input voltage. When the input signal is negative, the diode is forward-biased and the output is limited to −0.7 V, which is the diode drop. If you turn the diode around, you get a negative limiter, as shown in Figure 32(b). To change the limiting level, a reference voltage source can be used in series with the diode or a zener diode can be used in place of the rectifier diode.

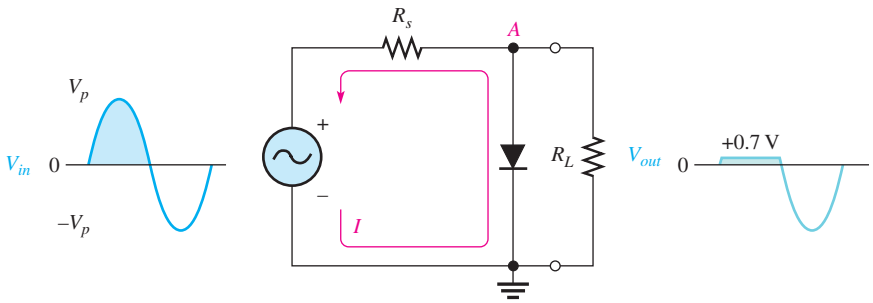

(a) Limiting of the positive alternation

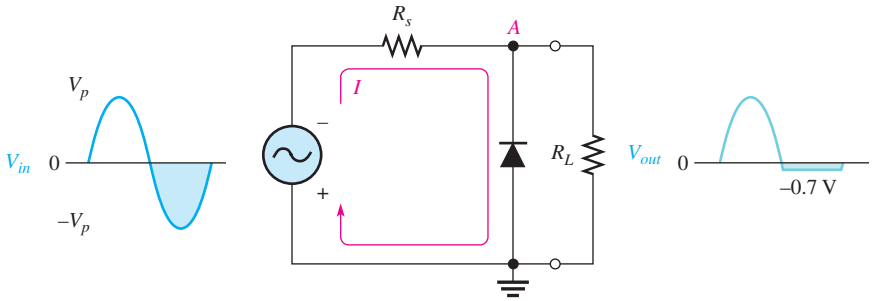

(b) Limiting of the negative alternation

▲ FIGURE 32

Basic diode limiters.

www.EngineeringBooksPdf.com

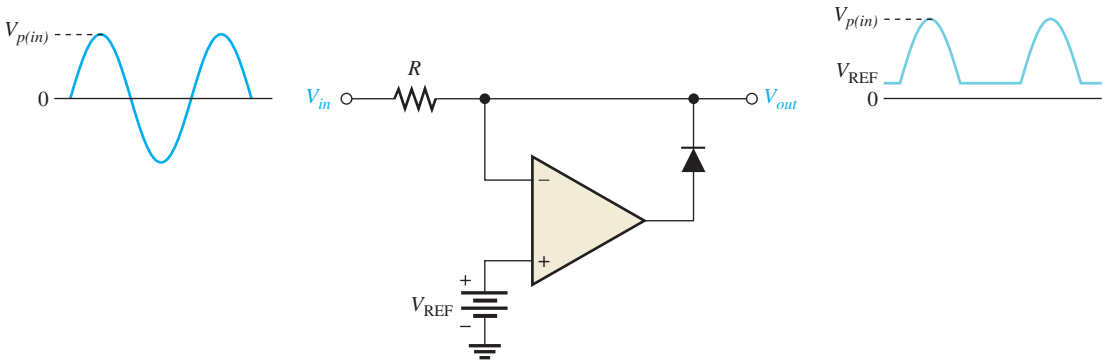

▲ FIGURE 33

An active negative limiting circuit.

Active Limiting Circuits One type of op-amp limiting circuit that uses an op-amp and a diode is shown in Figure 33. The operation is as follows, assuming negligible output loading. When the input voltage, V_{in}, is less than the reference voltage, V_{REF}, the op-amp differential input voltage is positive. This produces a positive voltage at the op-amp output that forward-biases the diode. When the diode is forward-biased, the op-amp operates as a voltage-follower and the output voltage, V_{out}, is limited to V_{REF} so that $V_{out} = V_{REF}$. When the input voltage, V_{in}, is greater than V_{REF}, the op-amp differential voltage is negative. This produces a negative voltage at the op-amp output that reverse-biases the diode. With the diode effectively open, the input voltage is coupled directly to the output through R so that $V_{out} = V_{in}$.

Another example of an active limiter uses two zener diodes to limit the output voltage both positively and negatively, as shown in Figure 34. The limiting voltage is set by the zener diodes connected in the feedback loop of an inverting amplifier to a value of $\pm(V_Z + 0.7\text{ V})$. Of course, when the input voltage is so small that the limiting voltage is not reached, one of the zener diodes is reverse-biased and acts as an open, so the output of the op-amp is linear and equal to $V_{out} = (R_f/R_i)V_{in}$. When the output reaches $\pm(V_Z + 0.7\text{ V})$, one of the zeners goes into reverse breakdown and the other is forward-biased.

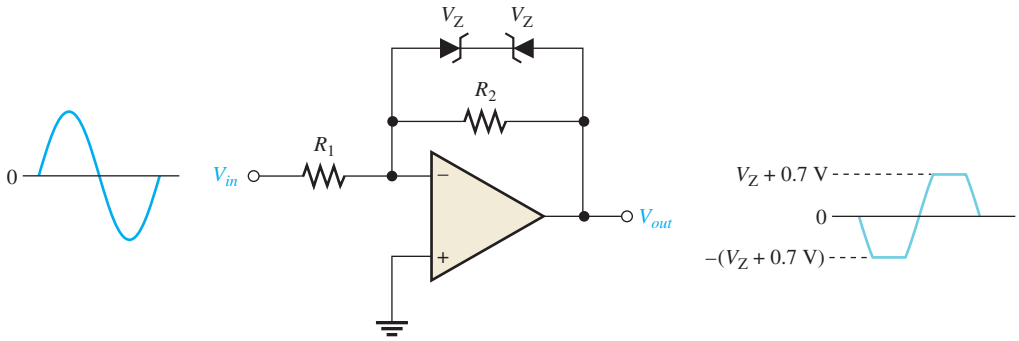

▲ FIGURE 34

Limiting circuit using zener diodes in an inverting op-amp configuration.

EXAMPLE 9

(a) Describe the output waveform for the limiting circuit in Figure 35 for a 1 kHz sine wave with a peak value of 100 mV.

(b) Repeat part (a) for a 1 kHz sine wave with a peak value of 1 V.

www.EngineeringBooksPdf.com

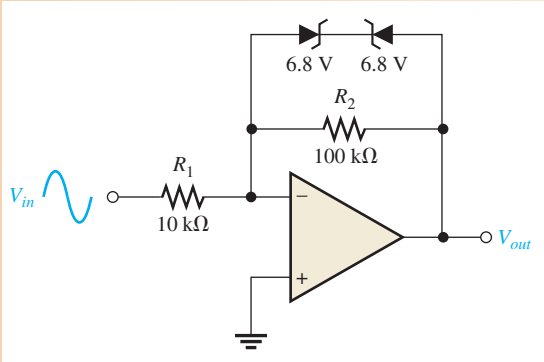

▲ FIGURE 35

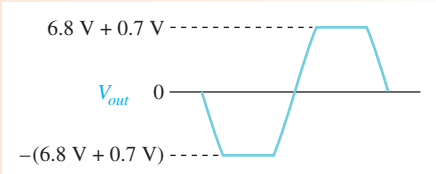

▲ FIGURE 36

Solution **(a)** The peak value of the output is

$$V_{p(out)} = (R_2/R_1)V_{p(in)} = (10)100\text{ mV} = 1\text{ V}$$

This value is less than the limiting level as set by the 6.8 V zener diodes, so the output is a sine wave that is not limited on its peaks.

(b) Since the peak output value exceeds the limiting level, the output is limited at $\pm(6.8\text{ V} + 0.7\text{ V})$, as shown in Figure 36.

Related Problem What happens to each of the outputs in parts (a) and (b) if R_2 in Figure 35 is decreased to 68 kΩ?

Peak Detector

Another application of the op-amp is in a peak detector circuit such as the one shown in Figure 37. In this case the op-amp is used as a comparator. This circuit is used to detect the peak of the input voltage and store that peak voltage on a capacitor. For example, this circuit can be used to detect and store the maximum value of a voltage surge; this value can then be measured at the output with a voltmeter or recording device. The basic operation is as follows. When a positive voltage is applied to the noninverting input of the op-amp through R_i, the high-level output voltage of the op-amp forward-biases the diode and charges the capacitor. The capacitor continues to charge until its voltage reaches a value equal to the input voltage and thus both op-amp inputs are at the same voltage. At this point, the op-amp comparator switches and its output goes to the low level. The diode is now reverse-biased, and the capacitor stops charging. It has reached a voltage equal to the peak of V_{in} and will hold this voltage until the charge eventually leaks off. If a greater input peak occurs, the capacitor charges to the new peak.

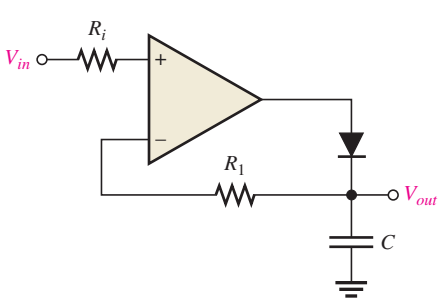

◀ FIGURE 37

A basic peak detector.

www.EngineeringBooksPdf.com

SECTION 4 CHECKUP

1. Explain what a clamping circuit does.
2. Explain what a limiting circuit does.
3. Explain what a peak detector does.
4. By what other name is a clamping circuit sometimes known?
5. By what other name is a limiting circuit sometimes known?

5 CURRENT SOURCES AND CONVERTERS

The constant-current source, the current-to-voltage converter, and the voltage-to-current converter are op-amp circuits that represent basic applications of the op-amp. This is, of course, not a comprehensive coverage of all possible op-amp circuits but introduces you to three common uses.

After completing this section, you should be able to

- **Analyze and explain three special types of op-amp circuits**
  - Describe how the op-amp is used as a constant-current source
  - Explain the operation of a current-to-voltage converter
  - Explain the operation of a voltage-to-current converter

Constant-Current Source

A constant-current source delivers a load current that remains constant when the load resistance changes. Figure 38 shows a basic circuit in which a stable voltage source (V_{IN}) provides a constant current (I_i) through the input resistor (R_i). Since the inverting (−) input of the op-amp is at virtual ground (0 V), the value of I_i is determined by V_{IN} and R_i as

$$I_i = \frac{V_{IN}}{R_i}$$

▶ **FIGURE 38**

A basic constant-current source.

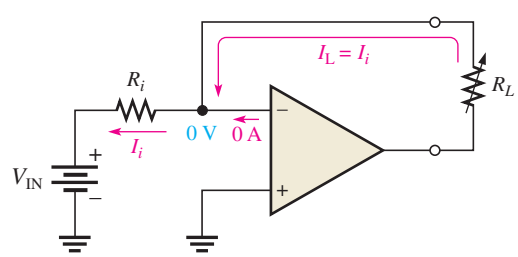

Now, since the internal input impedance of the op-amp is extremely high (ideally infinite), practically all of I_i is through R_L, which is connected in the feedback path. Since $I_i = I_L$,

$$I_L = \frac{V_{IN}}{R_i}$$

If R_L changes, I_L remains constant as long as V_{IN} and R_i are held constant.

www.EngineeringBooksPdf.com

Current-to-Voltage Converter

A current-to-voltage converter converts a variable input current to a proportional output voltage. A basic circuit that accomplishes this is shown in Figure 39(a). Since practically all of I_i is through the feedback path, the voltage dropped across R_f is I_iR_f. Because the left side of R_f is at virtual ground (0 V), the output voltage equals the voltage across R_f, which is proportional to I_i.

$$V_{out} = I_iR_f$$

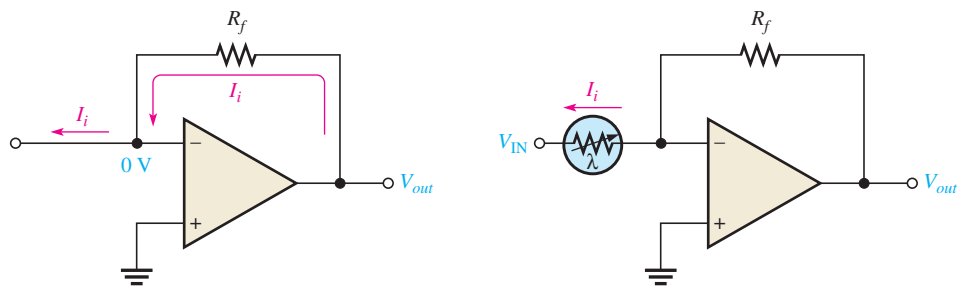

(a) Basic circuit

(b) Circuit for sensing light level and converting it to a proportional output voltage

FIGURE 39

Current-to-voltage converter.

A specific application of this circuit is illustrated in Figure 39(b), where a photoconductive cell is used to sense changes in light level. As the amount of light changes, the current through the photoconductive cell varies because of the cell's change in resistance. This change in resistance produces a proportional change in the output voltage ($\Delta V_{out} = \Delta I_iR_f$).

Voltage-to-Current Converter

A basic voltage-to-current converter is shown in Figure 40. This circuit is used in applications where it is necessary to have an output (load) current that is controlled by an input voltage.

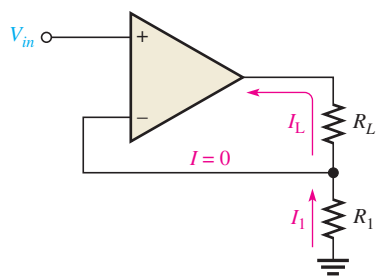

FIGURE 40

Voltage-to-current converter.

Neglecting the input offset voltage, both inverting and noninverting input terminals of the op-amp are at the same voltage, V_{in}. Therefore, the voltage across R_1 equals V_{in}. Since there is negligible current at the inverting input, the current through R_1 is the same as the current through R_L; thus,

$$I_L = \frac{V_{in}}{R_1}$$

SECTION 5 CHECKUP

1. For the constant-current source in Figure 38, the input reference voltage is 6.8 V and R_i is 10 kΩ. What value of constant current does the circuit supply to a 1.0 kΩ load? To a 5 kΩ load?
2. What element determines the constant of proportionality that relates input current to output voltage in the current-to-voltage converter?

www.EngineeringBooksPdf.com

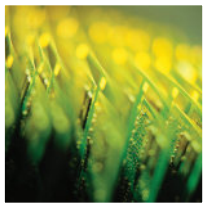

Application Assignment

PUTTING YOUR KNOWLEDGE TO WORK

This application assignment focuses on the amplifier circuits in an ECG system which include an isolation amplifier, a filter, and a postamplifier with summing capability. The ECG, or electrocardiograph, is used for monitoring heart signals. From the output waveform, a doctor can detect abnormalities in the heartbeat.

Basic Operation of the System

The human heart produces an electrical signal that can be picked up by electrodes in contact with the skin. When the heart signal is displayed on a chart recorder or on a video monitor, it is called an electrocardiograph (ECG). Typically, the heart signal picked up by the electrode is about 1 mV and has significant frequency components from less than 1 Hz to about 100 Hz.

As indicated in the block diagram in Figure 41, an ECG system has at least three electrodes. There is a right-arm (RA) electrode, a left-arm (LA) electrode, and a right-leg (RL) electrode that is the common terminal. The isolation amplifier provides for differential inputs from the electrodes, provides a high CMR (common-mode rejection) to eliminate the relatively high common-mode noise voltages associated with heart signals, and provides electrical isolation for protection of the patient. The low-pass filter rejects frequencies above those contained in the heart signal. The postamplifier provides most of the amplification in the system and drives a video monitor and/or a chart recorder. The three op-amp circuits are contained on the amplifier circuit board shown in Figure 42.

The inputs from the electrode sensors are connected to the amplifier board with shielded cable to prevent noise pickup. The schematic for the amplifier board is shown in Figure 43. The shielded cable is basically a twisted pair of wires surrounded by a braided metal sheathing that is covered by an insulated sleeve. The braided metal shield serves as the conduit for the common connection. The incoming differential signal is amplified by the fixed gain of the 3656KG isolation amplifier. The 3656KG package used in this system has 20 pins. As shown in Figure 42, pin 1 is at the square corner and pin 20 is directly opposite pin 1.

The low-pass filter is an active filter. All you need to know for this assignment is how to calculate its critical frequency and gain, and those formulas will be provided.

The postamplifier is an inverting amplifier with an adjustable voltage gain. The inverting input also serves as a summing point for the signal voltage, and a dc voltage is used for adding an adjustable dc level to the output for adjusting the vertical position of the display.

Step 1: Checking the Amplifier Board

1. Make sure that the circuit board shown in Figure 42 is correctly assembled by checking it against the schematic in Figure 43. Backside interconnections are shown as darker traces.
2. Label a copy of the board with component and input/output designations in agreement with the schematic.

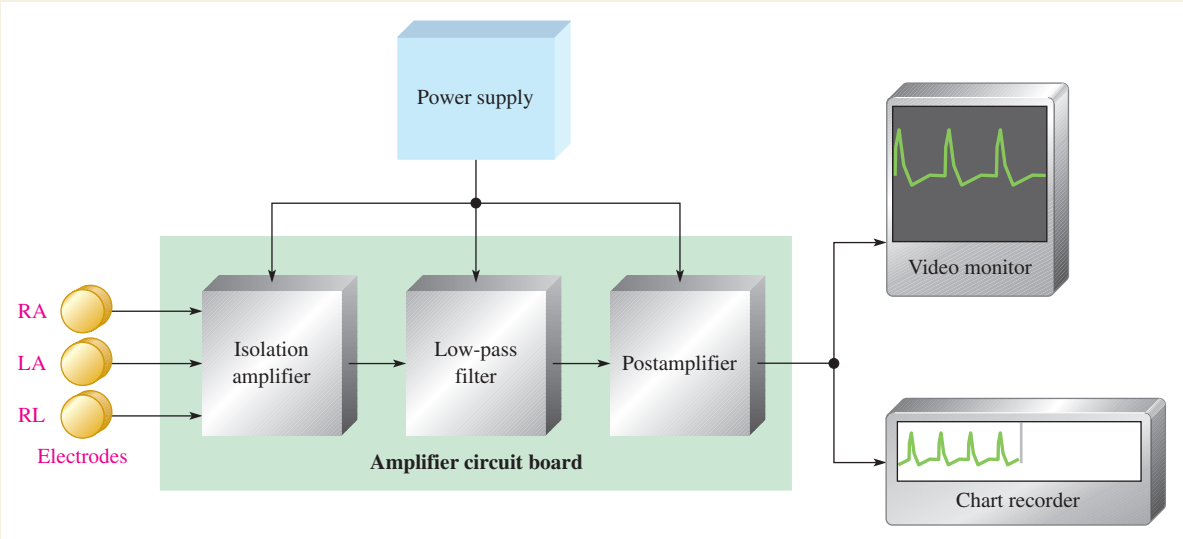

▲ FIGURE 41

Block diagram of the ECG system.

www.EngineeringBooksPdf.com

▶ **FIGURE 42**

Amplifier board.

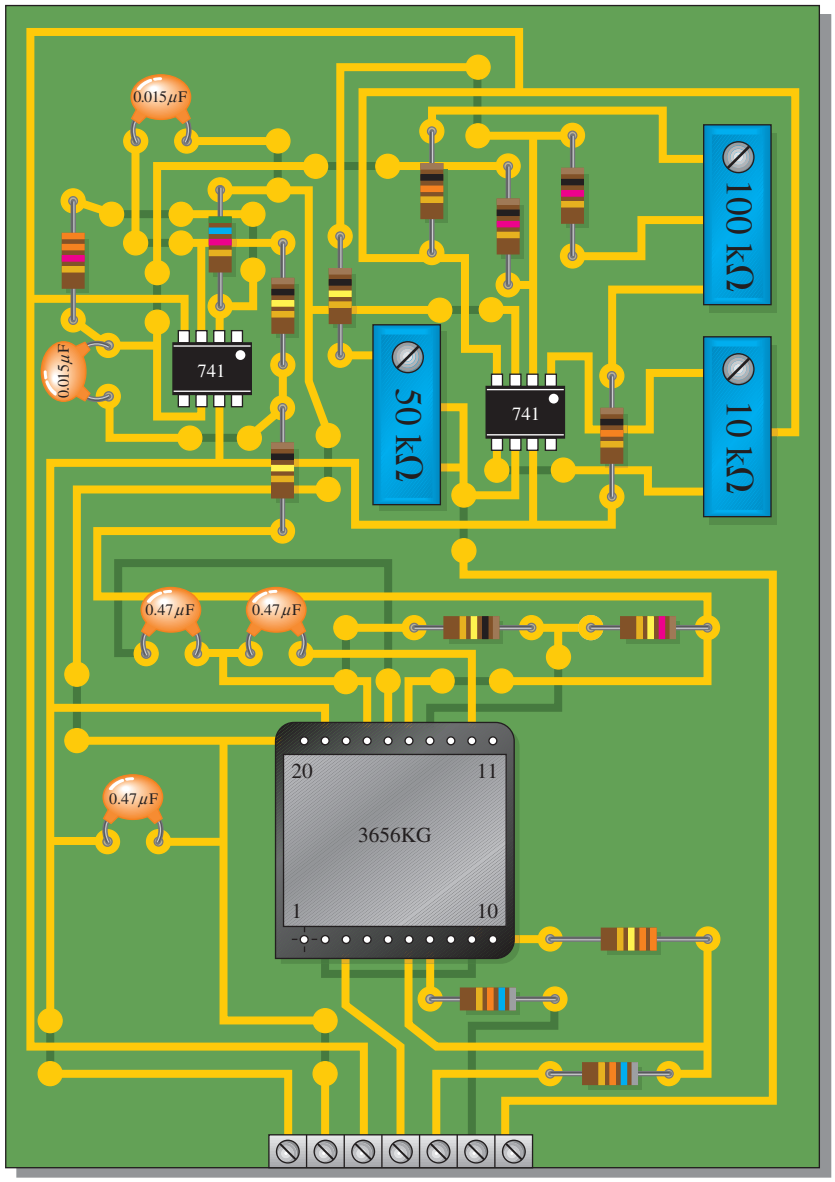

Step 2: Analyzing the Circuits

1. Determine the voltage gain of the isolation amplifier.
2. Determine the bandwidth and voltage gain of the filter using the following formulas, given that the response is from dc to the critical frequency.

$$f = \frac{1}{2\pi\sqrt{R_6R_7C_4C_5}}$$

$$A_v = 1 + \frac{R_8}{R_9}$$

3. Determine the minimum and maximum voltage gains of the postamplifier.
4. Determine the overall gain range of the amplifier board.
5. Determine the dc voltage range at the wiper of the position adjustment potentiometer.

Step 3: Troubleshooting the Circuits

Faults have developed in four boards. Based on the indication for each board listed, determine the most likely fault in each case. The circled numbers indicate the referenced test points on

www.EngineeringBooksPdf.com

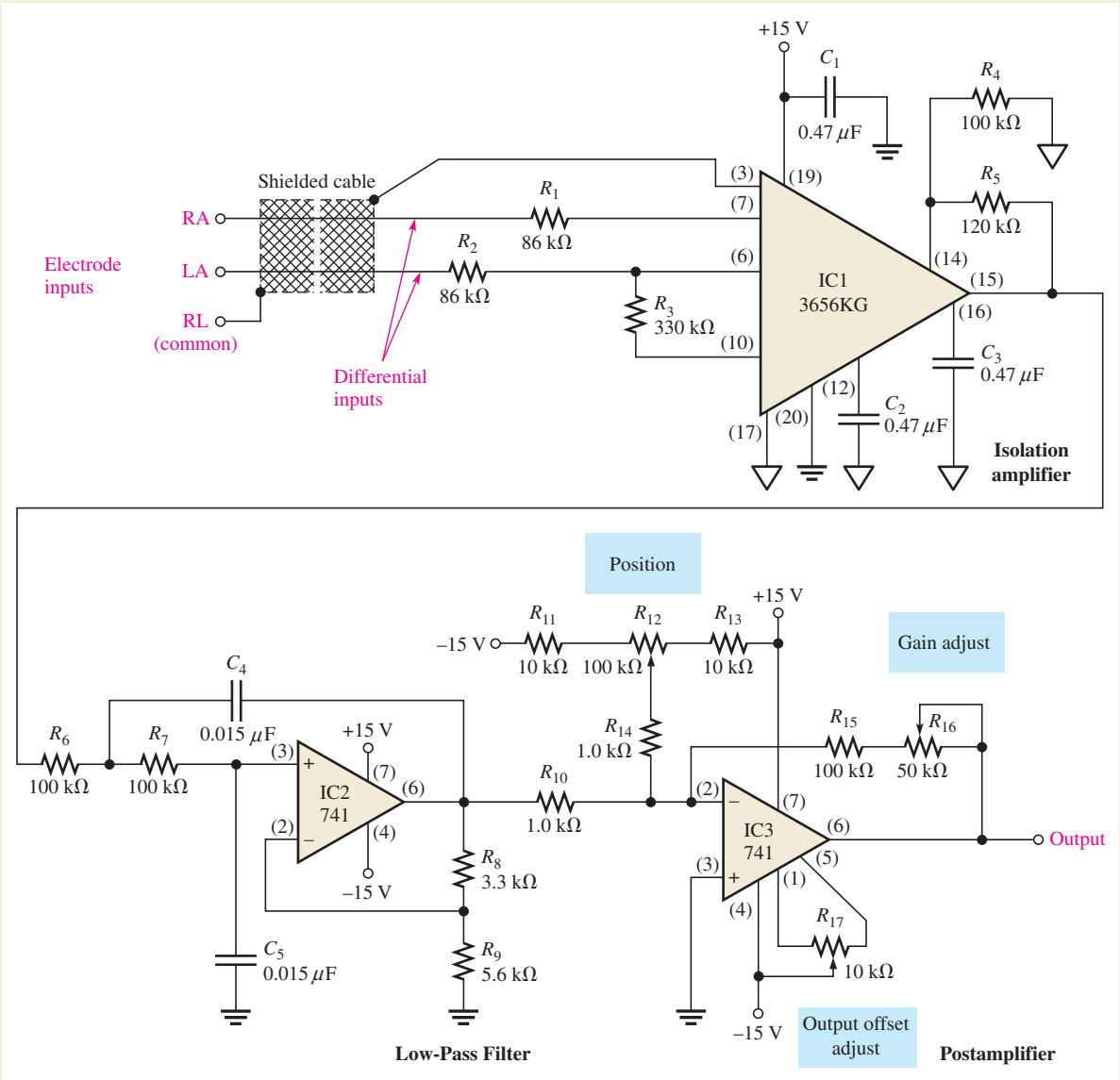

▲ **FIGURE 43**

Schematic of the amplifier board.

the circuit board in Figure 44. Assume that there is a verified sinusoidal input signal in each case and that each board has the proper dc supply voltages.

Board 1: There is no voltage at test point 1.

Board 2: With an input signal of 1 mV, there is an 10.6 mV signal at test point 2 but no signal at test point 3.

Board 3: With an input signal of 1 mV, there is a 16.9 mV signal at test point 4, but no signal at test point 5.

Board 4: There is an approximate square wave voltage with peaks at +14 V and −14 V at test point 1.

Review

1. What does ECG stand for?
2. In the ECG system, list the functions of the isolation amplifier.
3. What does the low-pass filter do in the ECG system?

www.EngineeringBooksPdf.com

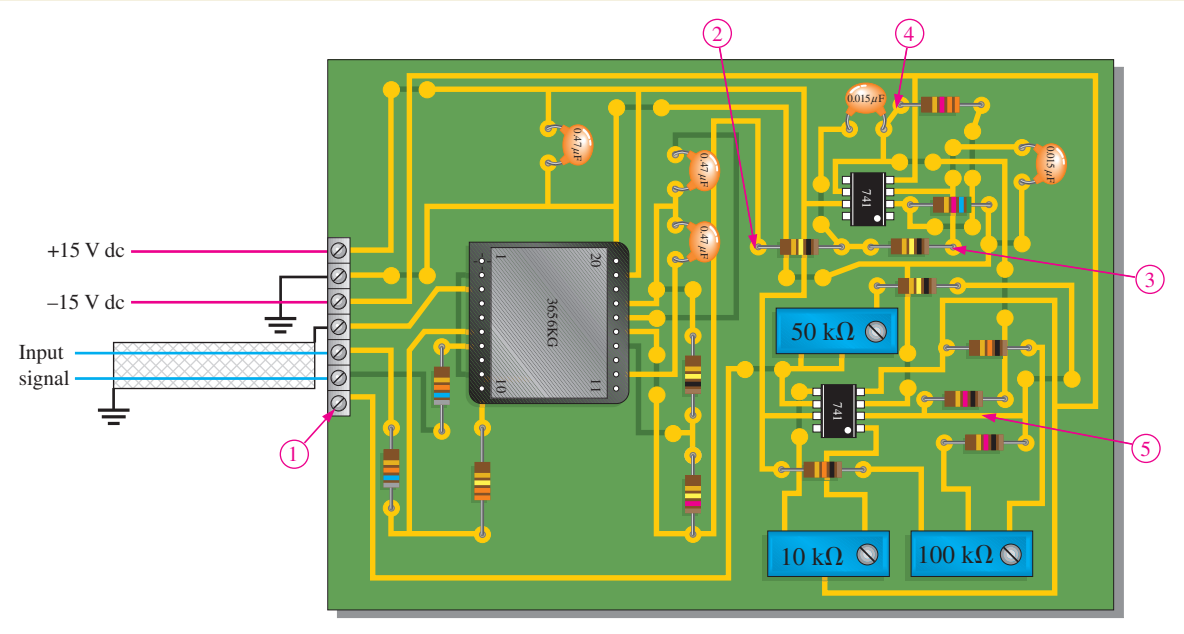

▲ **FIGURE 44**

Amplifier board with designated test points.

SUMMARY

- A basic instrumentation amplifier is formed by three op-amps and seven resistors, including the gain-setting resistor R_G.
- An instrumentation amplifier has high input impedance, high CMRR, low output offset, and low output impedance.
- The voltage gain of a basic instrumentation amplifier is set by a single external resistor.
- An instrumentation amplifier is useful in applications where small signals are embedded in large common-mode noise.
- A basic isolation amplifier has three electrically isolated parts: input, output, and power.
- Most isolation amplifiers use transformer coupling for isolation.
- Isolation amplifiers are used to interface sensitive equipment with high-voltage environments and to provide protection from electrical shock in certain medical applications.
- The operational transconductance amplifier (OTA) is a voltage-to-current amplifier.
- The output current of an OTA is the input voltage times the transconductance.
- In an OTA, transconductance varies with bias current; therefore, the gain of an OTA can be varied with a bias voltage or a variable resistor.
- Diode clampers add a dc level to an ac signal.
- Diode limiters cut off voltage above and below specified levels. Limiters are also called *clippers*.

KEY TERMS

Clamper A circuit that adds a dc level to an ac signal; a dc restorer.

Instrumentation amplifier An amplifier specially designed for amplifying small differential signals and rejecting large common-mode voltages.

www.EngineeringBooksPdf.com

Isolation amplifier An amplifier with electrically isolated internal stages.

Limiter A circuit that removes part of a waveform above or below a specified level; a clipper.

Operational transconductance amplifier (OTA) A voltage-to-current amplifier in which the gain is set by a bias current.

Transconductance In an electronic device, the ratio of the output current to the input voltage.

FORMULAS

1	$A_{cl} = 1 + \frac{2R}{R_G}$	Gain of a three-op-amp instrumentation amplifier
2	$R_G = \frac{2R}{A_{cl} - 1}$	Resistance of gain control for a three-op-amp instrumentation amplifier
3	$R_G = \frac{100\ \text{k}\Omega}{A_v - 1}$	Gain of an INA333 instrumentation amplifier
4	$A_{v1} = 1 + \frac{R_{f1}}{R_{i1}}$	Gain of the input stage of an 3656KG isolation amplifier
5	$A_{v2} = 1 + \frac{R_{f2}}{R_{i2}}$	Gain of the output stage of an 3656KG isolation amplifier
6	$g_m = \frac{I_{out}}{V_{in}}$	Definition of transconductance
7	$g_m = KI_{BIAS}$	Transconductance of an OTA

TRUE/FALSE QUIZ

Answers are at the end of the chapter.

1. An instrumentation amplifier requires separate power supplies for the input and output sections.
2. Instrumentation amplifiers have excellent specifications for rejecting differential signals.
3. The higher the gain of an instrumentation amplifier, the lower the bandwidth.
4. An isolation amplifier is the same as an instrumentation amplifier.
5. An isolation amplifier is commonly used in patient-monitoring applications for safety reasons.
6. The transconductance of an operational transconductance amplifier is controlled by a feedback resistor.
7. The ratio of output voltage to input current is called *transconductance*.
8. An active clamping circuit has a capacitor in the feedback path.
9. An active limiter circuit uses a diode in the feedback path.
10. An active peak detector circuit charges a capacitor to the peak input signal.

SELF-TEST

Answers are at the end of the chapter.

1. To make a basic instrumentation amplifier, it takes
   (a) one op-amp with a certain feedback arrangement
   (b) two op-amps and seven resistors
   (c) three op-amps and seven capacitors
   (d) three op-amps and seven resistors
2. Typically, an instrumentation amplifier has an external resistor used for
   (a) establishing the input impedance **(b)** setting the voltage gain
   (c) setting the current gain **(d)** interfacing with an instrument

www.EngineeringBooksPdf.com

3. Instrumentation amplifiers are used primarily in

(a) high-noise environments **(b)** amplitude modulators
(c) test instruments **(d)** filter circuits

4. Isolation amplifiers are used primarily in

(a) remote, isolated locations
(b) systems that isolate a single signal from many different signals
(c) applications where there are high voltages and sensitive equipment
(d) applications where human safety is a concern
(e) answers (c) and (d)

5. The three parts of a basic isolation amplifier are

(a) amplifier, filter, and power **(b)** input, output, and coupling
(c) input, output, and power **(d)** gain, attenuation, and offset

6. The stages of most isolation amplifiers are connected by

(a) copper strips **(b)** transformers
(c) microwave links **(d)** current loops

7. The characteristic that allows an isolation amplifier to amplify small signal voltages in the presence of much greater noise voltages is its

(a) CMRR **(b)** high gain
(c) high input impedance **(d)** magnetic coupling between input and output

8. The term *OTA* means

(a) operational transistor amplifier **(b)** operational transformer amplifier
(c) operational transconductance amplifier **(d)** output transducer amplifier

9. In an OTA, the transconductance is controlled by

(a) the dc supply voltage **(b)** the input signal voltage
(c) the manufacturing process **(d)** a bias current

10. The voltage gain of an OTA circuit is set by

(a) a feedback resistor **(b)** the transconductance only
(c) the transconductance and the load resistor **(d)** the bias current and supply voltage

11. An OTA is basically a

(a) voltage-to-current amplifier **(b)** current-to-voltage amplifier
(c) current-to-current amplifier **(d)** voltage-to-voltage amplifier

12. For a given input signal, the minimum output signal voltage of an active positive clamper is

(a) equal to the dc value of the input
(b) equal to the peak value of the input
(c) equal to the voltage connected to the + input of the op-amp
(d) equal to the voltage connected to the − input of the op-amp

13. When the + input of the clamper op-amp is connected to ground, the dc value of the output voltage is

(a) zero **(b)** equal to the dc value of the input
(c) equal to the average value of the input **(d)** equal to the peak value of the input

14. In an active positive limiter (similar to the one in Figure 33 except for the direction of the diode) with a sine wave input voltage, the output signal is

(a) limited to values above V_{REF} **(b)** limited to values below V_{REF}
(c) always 0.7 V **(d)** like the input signal

15. An active limiter with back-to-back zener diodes across the feedback path limits the

(a) positive peaks only
(b) positive and negative peaks
(c) negative peaks only
(d) positive peak to the zener voltage and the negative peak to −0.7 V

www.EngineeringBooksPdf.com

PROBLEMS

Answers to odd-numbered problems are at the end of the chapter.

BASIC PROBLEMS

SECTION 1 Instrumentation Amplifiers

1. Determine the voltage gains of op-amps A1 and A2 for the instrumentation amplifier configuration in Figure 45.
2. Find the overall voltage gain of the instrumentation amplifier in Figure 45.
3. The following voltages are applied to the instrumentation amplifier in Figure 45: $V_{in1} = 5$ mV, $V_{in2} = 10$ mV, and $V_{cm} = 225$ mV. Determine the final output voltage.
4. What value of R_G must be used to change the gain of the instrumentation amplifier in Figure 45 to 1000?

▶ FIGURE 45

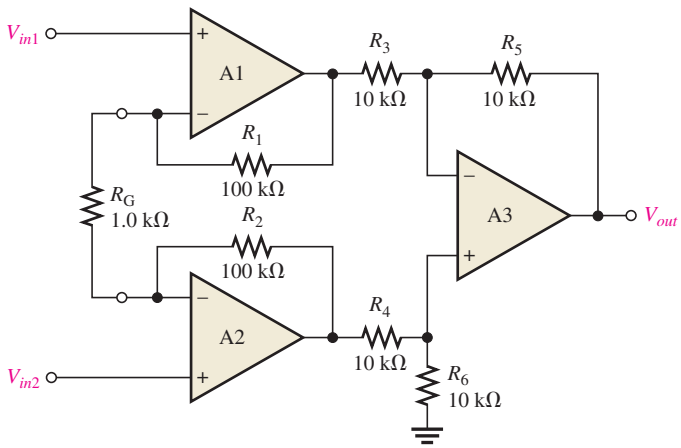

5. What is the voltage gain of the INA333 instrumentation amplifier in Figure 46?
6. Determine the approximate bandwidth of the amplifier in Figure 46. Use the graph in Figure 6.
7. Specify what you must do to change the gain of the amplifier in Figure 46 to approximately 24.
8. Determine the value of R_G in Figure 46 for a voltage gain of 20.6.

▶ FIGURE 46

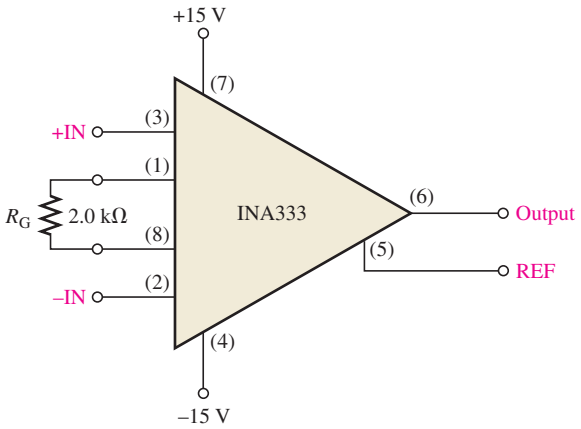

SECTION 2 Isolation Amplifiers

9. The op-amp in the input stage of a 3656KG isolation amplifier has a voltage gain of 30. The output stage is set for a gain of 10. What is the total voltage gain of this device?

www.EngineeringBooksPdf.com

10. Determine the total voltage gain of each 3656KG in Figure 47.

11. Specify how you would change the total gain of the amplifier in Figure 47(a) to approximately 100 by changing only the gain of the input stage.

12. Specify how you would change the total gain in Figure 47(b) to approximately 440 by changing only the gain of the output stage.

13. Specify how you would connect each amplifier in Figure 47 for unity gain.

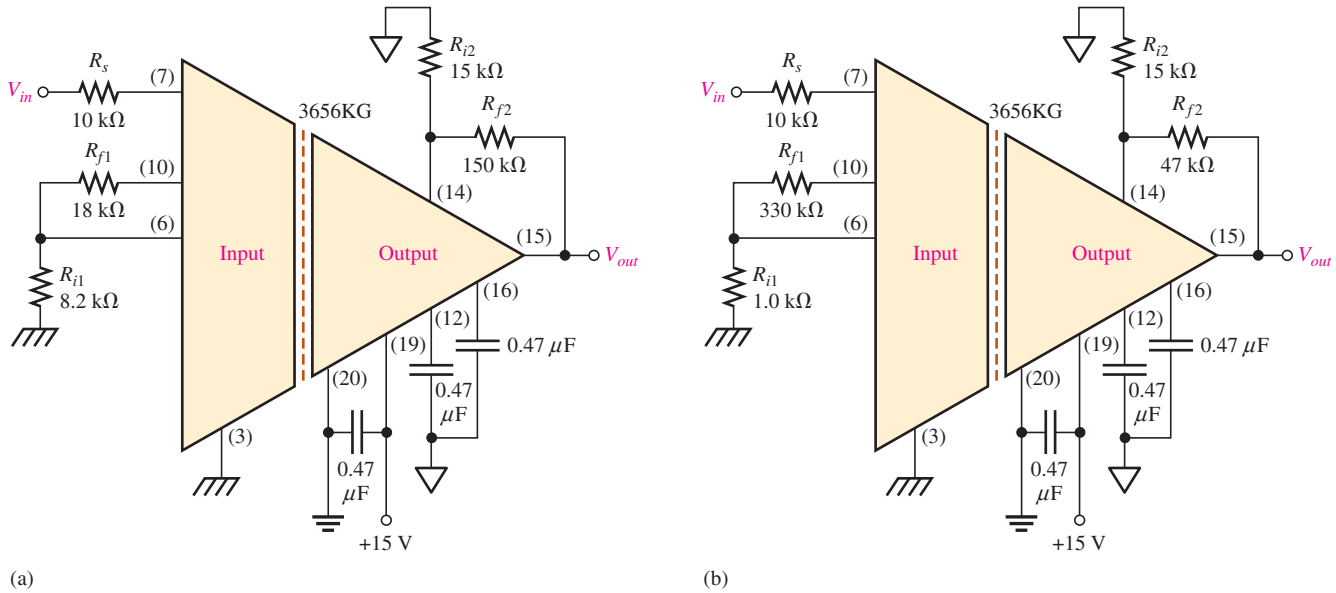

▲ **FIGURE 47**

SECTION 3 Operational Transconductance Amplifiers (OTAs)

14. A certain OTA has an input voltage of 10 mV and an output current of 10 μA. What is the transconductance?

15. A certain OTA with a transconductance of 5000 μS has a load resistance of 10 kΩ. If the input voltage is 100 mV, what is the output current? What is the output voltage?

16. The output voltage of a certain OTA with a load resistance is determined to be 3.5 V. If its transconductance is 4000 μS and the input voltage is 100 mV, what is the value of the load resistance?

17. Determine the voltage gain of the OTA in Figure 48. Assume $K = 16\ \mu S/\mu A$.

18. If a 10 kΩ rheostat is added in series with the bias resistor in Figure 48, what are the minimum and maximum voltage gains?

▶ **FIGURE 48**

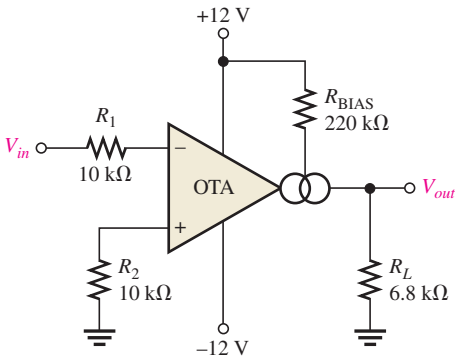

www.EngineeringBooksPdf.com

19. The OTA in Figure 49 functions as an amplitude modulation circuit. Determine the output voltage waveform for the given input waveforms assuming $K = 16\ \mu S/\mu A$.

▶ FIGURE 49

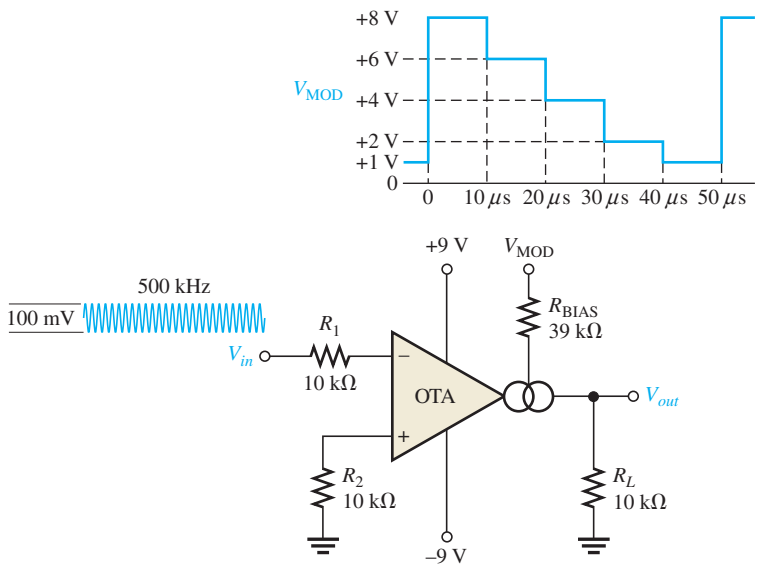

20. Determine the trigger points for the Schmitt trigger in Figure 50.

21. Determine the output voltage waveform for the Schmitt trigger in Figure 50 in relation to a 1 kHz sine wave with peak values of ±10 V.

▶ FIGURE 50

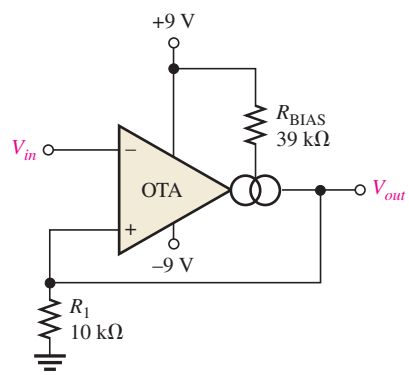

SECTION 4 Active Diode Circuits

22. Describe the output waveform of each circuit in Figure 51. Assume that the R_LC time constant is much greater than the period of the input signal.

▶ FIGURE 51

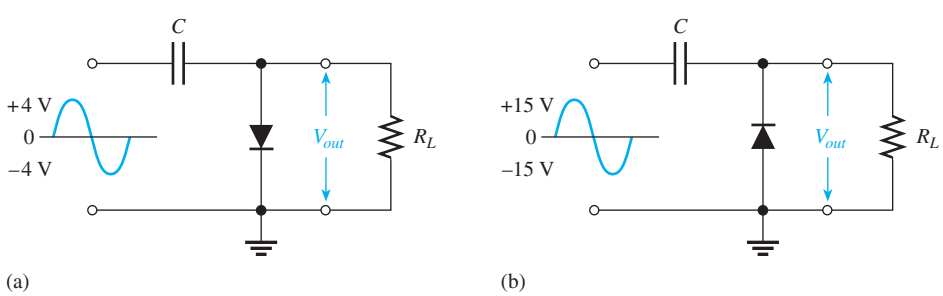

www.EngineeringBooksPdf.com

23. Determine the output voltage for the clamping circuit in Figure 52 for the input shown.

▶ FIGURE 52

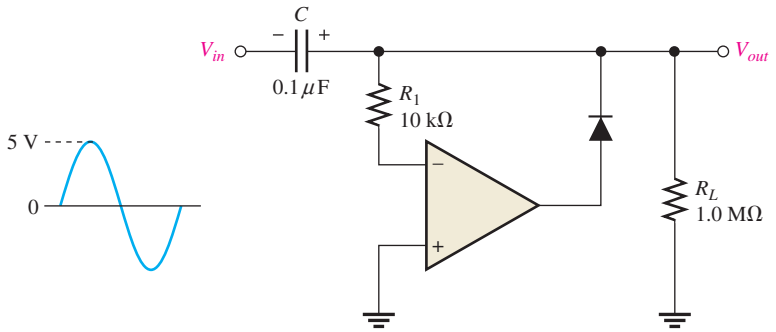

24. Repeat Problem 23 for the clamping circuit in Figure 53.

▶ FIGURE 53

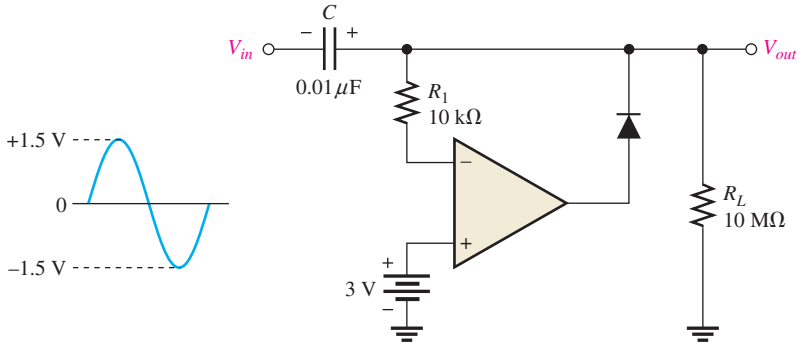

25. Describe the output waveform for each circuit in Figure 54.

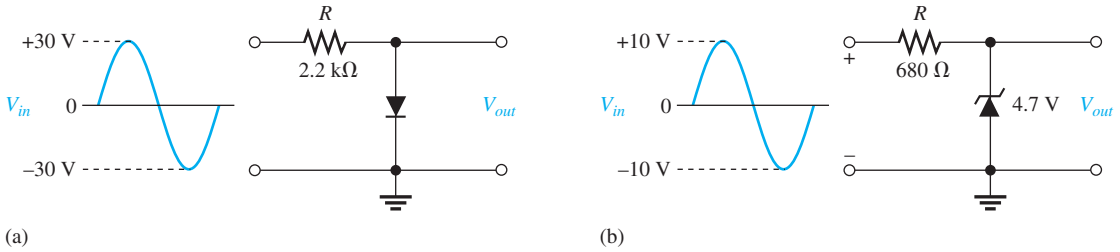

▲ FIGURE 54

26. Determine the output waveform for the active limiter in Figure 55.

▶ FIGURE 55

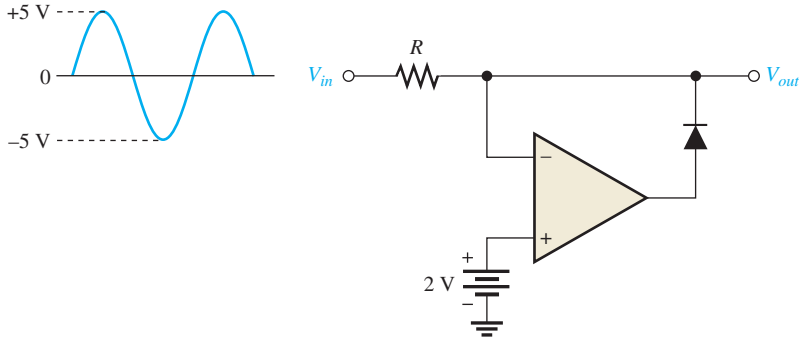

www.EngineeringBooksPdf.com

27. Show the output voltage for the zener diode limiter in Figure 56.

▶ FIGURE 56

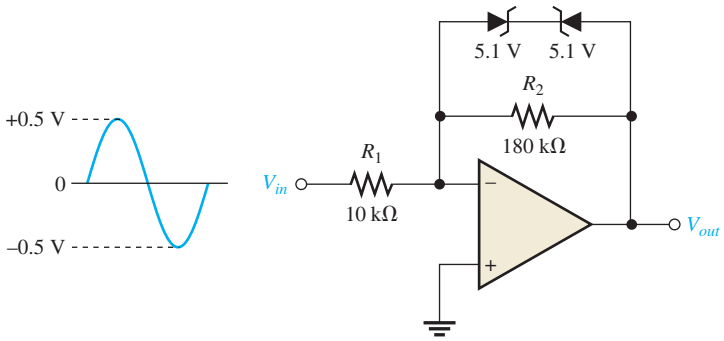

28. Repeat Problem 27 if the input is reduced to a peak value of 50 mV.

29. What is the ideal output voltage for a peak detector like the one shown in Figure 37 if the input has an rms value of 2.5 V?

SECTION 5 Current Sources and Converters

30. Determine the load current in each circuit of Figure 57.

▶ FIGURE 57

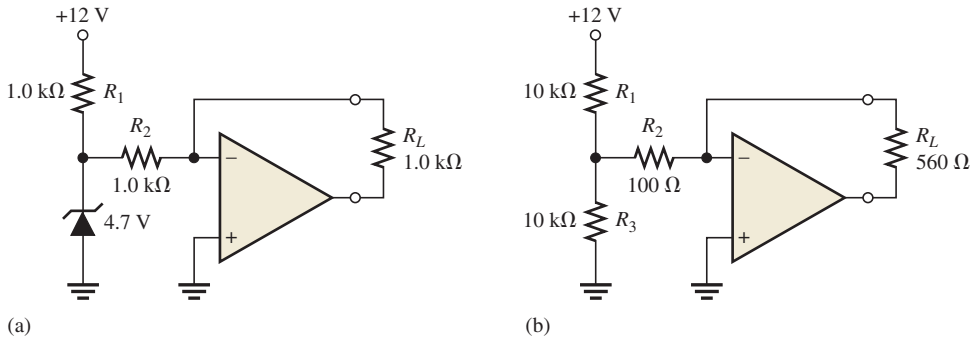

31. Devise a circuit for remotely sensing temperature and producing a proportional voltage that can then be converted to digital form for display. A thermistor can be used as the temperature-sensing element.

MULTISIM TROUBLESHOOTING PROBLEMS

32. Open file P20–32; files are found at www.pearsonhighered.com/floyd/. Determine the fault.

33. Open file P20–33 and determine the fault.

34. Open file P20–34 and determine the fault.

35. Open file P20–35 and determine the fault.

36. Open file P20–36 and determine the fault.

37. Open file P20–37 and determine the fault.

ANSWERS

SECTION CHECKUPS

SECTION 1 Instrumentation Amplifiers

1. The main purpose of an instrumentation amplifier is to amplify small signals that occur on large common-mode voltages. The key characteristics are high input impedance, high CMRR, low output impedance, and low output offset.

www.EngineeringBooksPdf.com

2. Three op-amps and seven resistors including the gain resistor are required to construct a basic instrumentation amplifier (see Figure 2).
3. The gain is set by the external resistor R_G.
4. The gain is approximately 7.7.

SECTION 2 Isolation Amplifiers

1. Isolation amplifiers are used in medical equipment, power plant instrumentation, industrial processing, and automated testing.
2. The two stages of an isolation amplifier are input and output and their purpose is isolation.
3. The stages are connected by transformer coupling.
4. The oscillator acts as a dc to ac converter so that the dc power can be ac coupled to the input and output stages.

SECTION 3 Operational Transconductance Amplifiers (OTAs)

1. OTA stands for Operational Transconductance Amplifier.
2. Transconductance increases with bias current.
3. Assuming that the bias input is connected to the supply voltage, the voltage gain increases when the supply voltage is increased because this increases the bias current.
4. The voltage gain decreases as the bias voltage decreases.

SECTION 4 Active Diode Circuits

1. A clamping circuit effectively restores the dc of an input signal.
2. A limiting circuit clips the input signal at a specified level.
3. A peak detector "stores" the peak value of an input signal.
4. A clamping circuit is called a dc restorer.
5. A limiting circuit is called a clipper.

SECTION 5 Current Sources and Converters

1. $I_L = 6.8\text{ V}/10\text{ k}\Omega = 0.68\text{ mA}$; same value to 5 kΩ load.
2. The feedback resistor is the constant of proportionality.

RELATED PROBLEMS FOR EXAMPLES

1 241 Ω

2 Make $R_G = 2.7\text{ k}\Omega$.

3 The ripple can be removed by an output high-pass filter.

4 By changing only R_{i2} from 10 kΩ to 5.6 kΩ, a gain of 103 is achieved. There are other possibilities.

5 $I_{BIAS} \cong 62.5\ \mu\text{A}$

6 Yes. The gain will change to approximately 110.

7 The output is a square-wave modulated signal with a maximum amplitude of approximately 3.6 V and a minimum amplitude of approximately 1.76 V.

8 6.5 V

9 **(a)** $V_{p(out)}$ decreases to 0.68 V with no limiting.
(b) $V_{p(out)}$ is 6.8 V with no limiting.

TRUE/FALSE QUIZ

1. F **2.** F **3.** T **4.** F **5.** T **6.** F **7.** F **8.** F **9.** T **10.** T

SELF-TEST

1. (d) **2.** (b) **3.** (a) **4.** (e) **5.** (c) **6.** (b) **7.** (a) **8.** (c)
9. (d) **10.** (c) **11.** (a) **12.** (c) **13.** (d) **14.** (b) **15.** (b)

www.EngineeringBooksPdf.com

PROBLEMS – ODD NUMBERED ANSWERS

1. $A_{v(1)} = A_{v(2)} = 101$

3. 1.005 V

5. 51

7. Change R_G to 4.3 kΩ.

9. 300

11. Change R_{f1} to 66.3 kΩ.

13. Connect pin 6 directly to pin 10, and connect pin 14 directly to pin 15 to make $R_f = 0$.

15. 500 μA, 5 V

17. $A_v \cong 11.6$

19. See Figure P–31.

▶ FIGURE P–31

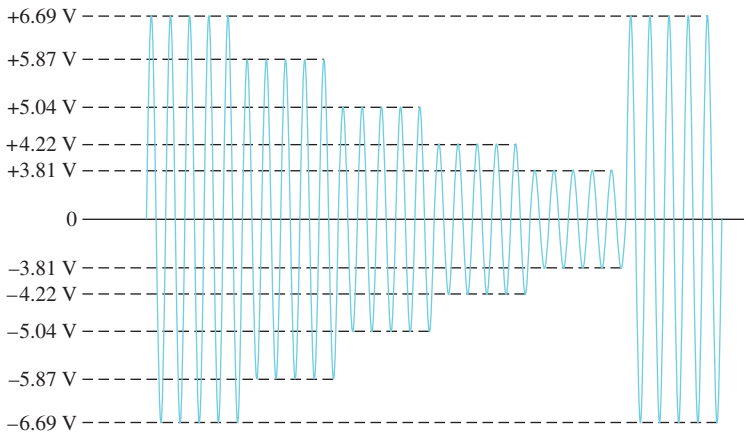

21. See Figure P–32.

▶ FIGURE P–32

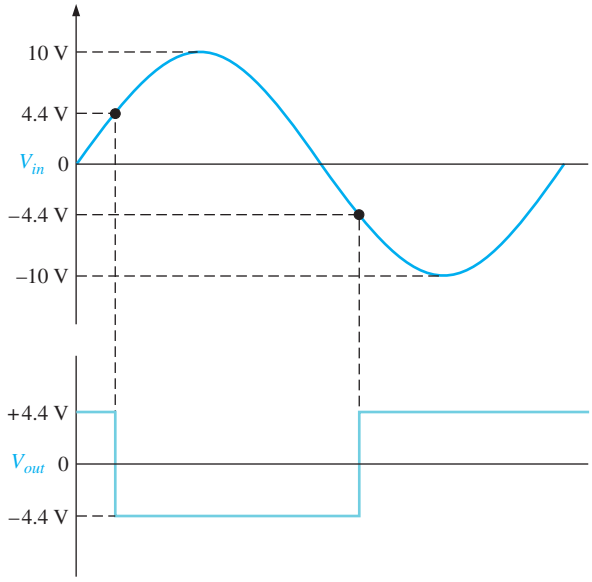

www.EngineeringBooksPdf.com

▶ FIGURE P–33

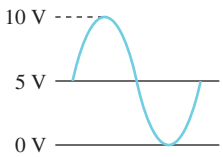

25. **(a)** See Figure P–34(a).
(b) See Figure P–34(b).

▶ FIGURE P–34

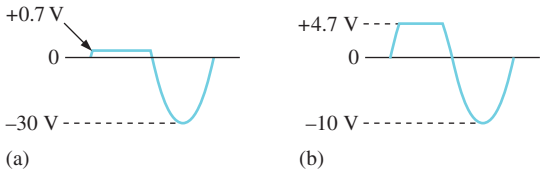

27. See Figure P–35.

▶ FIGURE P–35

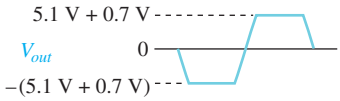

29. 3.54 V
31. See Figure P–36.

▶ FIGURE P–36

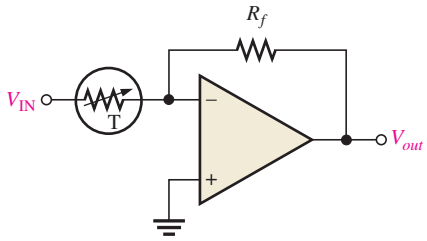

33. D_2 is shorted.
35. Zener diode is open.
37. The diode is open.

www.EngineeringBooksPdf.com

This page intentionally left blank

www.EngineeringBooksPdf.com

MEASUREMENT, CONVERSION, AND CONTROL

From Chapter 21 of *Electronics Fundamentals: Circuits, Devices, and Applications*, Eighth Edition, Thomas L. Floyd, David M. Buchla.
Copyright © 2010 by Pearson Education, Inc. Published by Pearson Prentice Hall. All rights reserved.

www.EngineeringBooksPdf.com

Measurement, Conversion, and Control

CHAPTER OUTLINE

1. Temperature Measurement
2. Strain, Pressure, and Flow Rate Measurements
3. Motion Measurement
4. Sample-and-Hold Circuits
5. Analog-to-Digital Conversion
6. Power-Control Circuits

Application Assignment: Putting Your Knowledge to Work

CHAPTER OBJECTIVES

- Discuss the operation of three types of temperature-measuring circuits
- Describe methods of measuring strain, pressure, and flow rate
- Describe methods of measuring motion
- Explain the operation of a sample-and-hold circuit
- Explain the operation of an analog-to-digital converter
- Describe how power to a load is controlled

KEY TERMS

- Transducer
- Thermocouple
- Cold junction
- RTD
- Thermistor
- Strain gauge
- Sample-and-hold
- ADC
- Resolution
- Conversion time
- Quantization
- Flash
- Thyristor
- SCR
- Triac

APPLICATION ASSIGNMENT PREVIEW

In the application assignment, a temperature-sensing circuit is featured. The circuit uses a zener-based temperature sensor for controlling the speed of a dc fan motor. The purpose of the circuit is to cool the temperature of an electronic circuit enclosed in a box. As the temperature rises above a set value, the temperature-sensing motor-control circuit turns on a fan to provide air flow through the box. The higher the temperature, the faster the motor runs. When the temperature falls below the set value, the fan motor turns off. In addition to the sensor, a type of thyristor known as a silicon-controlled rectifier (SCR) is used to turn the motor on and off. After studying this chapter, you should be able to complete the application assignment.

VISIT THE COMPANION WEBSITE

Study aids for this chapter are available at http://www.pearsonhighered.com/floyd/

INTRODUCTION

Several types of transducers and related circuits for measuring basic physical analog parameters such as temperature, strain, pressure, flow rate, and motion are introduced in this chapter. Also, the basic ideas of converting an analog signal to digital form are covered. Most parameters occurring in nature are analog and must be measured and then converted into digital form for processing by computers or digital signal processors.

A transducer is a device that converts a physical parameter into an electrical signal and is often called a sensor. A sample-and-hold circuit takes the measured parameter and changes it to a form for analog-to-digital conversion by an ADC (analog-to-digital converter).

Streeter Photography/Alamy

www.EngineeringBooksPdf.com

1 TEMPERATURE MEASUREMENT

Temperature is the most common physical parameter that is measured and converted to electrical form. Several types of temperature **transducers** respond to temperature and produce a corresponding indication by a change or alteration in a physical characteristic that can be detected by an electronic circuit. Common types of temperature transducers are thermocouples, resistance temperature detectors (RTDs), and thermistors.

After completing this section, you should be able to

- **Discuss the operation of three types of temperature-measuring circuits**
  - Describe a thermocouple and how to interface it with an electronic circuit
  - Describe a resistance temperature detector (RTD) and circuit interfacing
  - Describe a thermistor and circuit interfacing

The Thermocouple

A **thermocouple** is formed by joining two dissimilar metals. A small voltage, called the *Seebeck voltage,* is produced across the junction of the two metals when heated, as illustrated in Figure 1. The amount of voltage produced is dependent on the types of metals and is directly proportional to the temperature of the junction (positive temperature coefficient); however, this voltage is generally much less than 100 mV. The voltage versus temperature characteristic of thermocouples is somewhat nonlinear, but the amount of nonlinearity is predictable. Thermocouples are widely used in certain industries because they have a wide temperature range and can be used to measure very high temperatures.

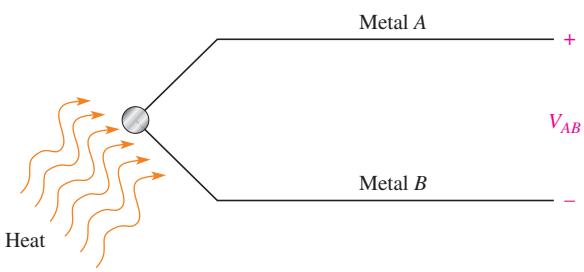

FIGURE 1

A voltage proportional to temperature is generated when a thermocouple is heated.

Some common metal combinations used in commercial thermocouples are chromel-alumel (chromel is a nickel-chromium alloy and alumel is a nickel-aluminum alloy), iron-constantan (constantan is a copper-nickel alloy), chromel-constantan, tungsten-rhenium alloys, and platinum-10% Rh/Pt. Each of these types of thermocouple has a different temperature range, coefficient, and voltage characteristic and is designated by the letter *K*, *J*, *E*, *W*, and *S*, respectively. The overall temperature range covered by thermocouples is from −250°C to 2000°C. Each type covers a different portion of this range, as shown in Figure 2.

Thermocouple-to-Electronics Interface When a thermocouple is connected to a signal-conditioning circuit, as illustrated in Figure 3, an *unwanted* thermocouple is effectively created at the point(s) where one or both of the thermocouple wires connect to the circuit terminals made of a dissimilar metal. The unwanted thermocouple junction is sometimes referred to as a **cold junction** in some references because it is normally at a significantly lower temperature than that being measured by the measuring thermocouple. These unwanted thermocouples can have an unpredictable effect on the overall voltage that is sensed

This icon indicates selected websites for further information on topics in this section. See the Companion Website provided with this text.

www.EngineeringBooksPdf.com

▶ **FIGURE 2**

Output of some common thermocouples with 0°C as the reference temperature.

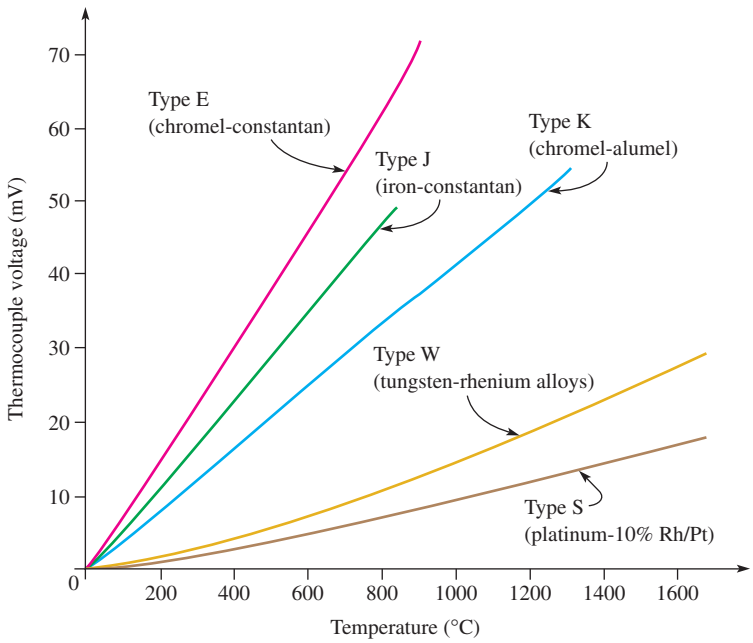

▶ **FIGURE 3**

Creation of an unwanted thermocouple in a thermocouple-to-electronics interface.

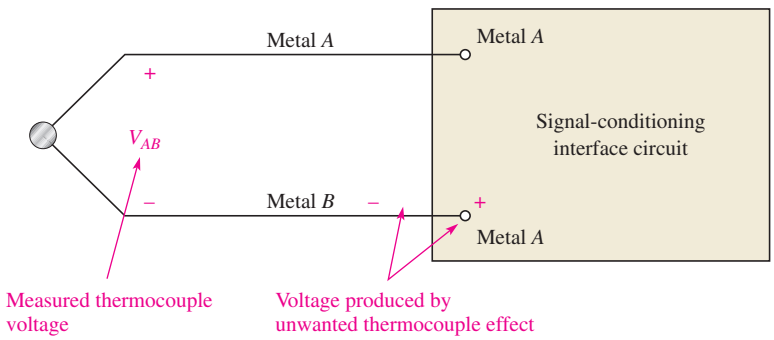

by the circuit because the voltage produced by the unwanted thermocouple opposes the measured thermocouple voltage and its value depends on ambient temperature.

Example of a Thermocouple-to-Electronics Interface As shown in Figure 4, a copper/constantan thermocouple (known as type *T*) is used, in this case, to measure the temperature in an industrial temperature chamber. The copper thermocouple wire is connected to a copper terminal on the circuit board, and the constantan wire is also connected

▶ **FIGURE 4**

A simplified temperature-measuring circuit with an unwanted thermocouple at the junction of the constantan wire and the copper terminal.

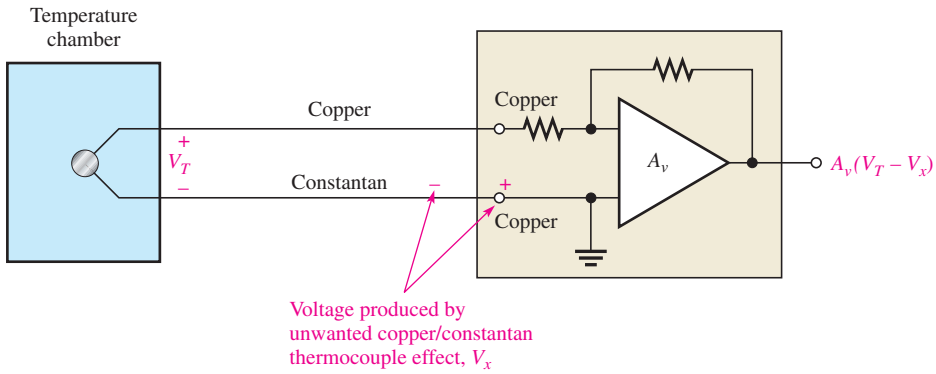

www.EngineeringBooksPdf.com

to a copper terminal on the circuit board. The copper-to-copper connection is no problem because the metals are the same. The constantan-to-copper connection acts as an unwanted thermocouple that will produce a voltage, V_x, in opposition to the thermocouple voltage because the metals are dissimilar.

Since the unwanted thermocouple connection is not at a fixed temperature, its effects are unpredictable and it will introduce inaccuracy into the measured temperature. One method for eliminating an unwanted thermocouple effect is to add a reference thermocouple at a constant known temperature (usually 0°C). Figure 5 shows that by using a reference thermocouple that is held at a constant known temperature, the unwanted thermocouple at the circuit terminal is eliminated because both contacts to the circuit terminals are now copper-to-copper. The voltage produced by the reference thermocouple is a known constant value and can be compensated for in the op-amp circuitry.

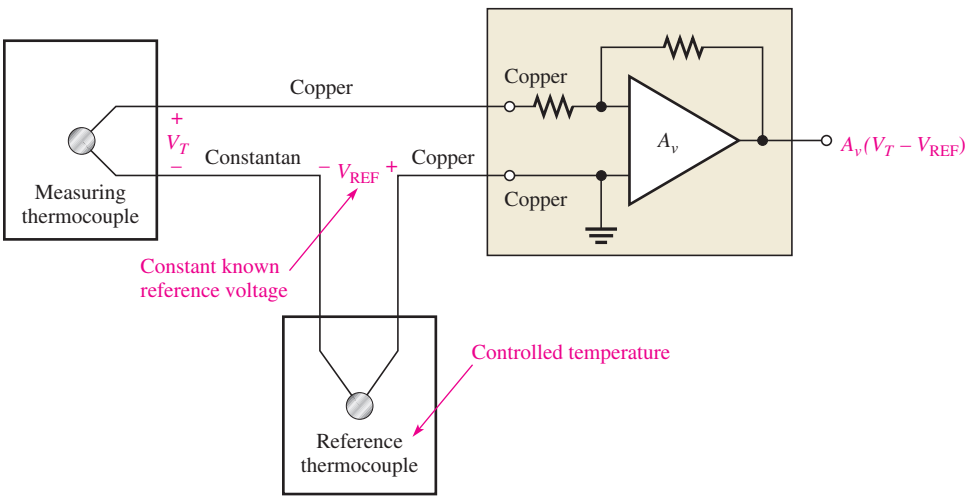

FIGURE 5
Using a reference thermocouple in a temperature-measuring circuit.

EXAMPLE 1

Suppose the thermocouple in Figure 4 is measuring 200°C in an industrial oven. The circuit board is in an area where the ambient temperature can vary from 15°C to 35°C. Using Table 1 for a type-*T* (copper/constantan) thermocouple, determine the voltage across the circuit input terminals at the ambient temperature extremes. What is the maximum percent error in the voltage at the op-amp circuit input terminals?

TABLE 1
Type-T thermocouple voltage.

TEMPERATURE (°C)	OUTPUT (mV)
−200	−5.603
−100	−3.378
0	0.000
+100	4.277
+200	9.286
+300	14.860
+400	20.869

Solution From Table 1, you know that the measuring thermocouple is producing 9.286 mV. To determine the voltage that the unwanted thermocouple is creating at 15°C, you

www.EngineeringBooksPdf.com

must interpolate from the table. Since 15°C is 15% of 100°C, a linear interpolation gives the following voltage:

$$0.15(4.277\text{ mV}) = 0.642\text{ mV}$$

Since 35°C is 35% of 100°C, the voltage is

$$0.35(4.277\text{ mV}) = 1.497\text{ mV}$$

The voltage across the op-amp circuit input terminals at 15°C is

$$9.286\text{ mV} - 0.642\text{ mV} = \mathbf{8.644\text{ mV}}$$

The voltage across the op-amp circuit input terminals at 35°C is

$$9.286\text{ mV} - 1.497\text{ mV} = \mathbf{7.789\text{ mV}}$$

The maximum percent error in the voltage at the op-amp circuit input terminals is

$$\left(\frac{9.286\text{ mV} - 7.789\text{ mV}}{9.286\text{ mV}}\right)100\% = \mathbf{16.1\%}$$

You can never be sure how much it is off because you have no control over the ambient temperature. Also, the linear interpolation may or may not be accurate, depending on the linearity of the temperature characteristic of the unwanted thermocouple.

*Related Problem** In the case of the circuit in Figure 4, if the temperature being measured goes up to 300°C, what is the maximum percent error in the voltage across the op-amp circuit input terminals for the same ambient temperature range specified in the example?

*Answers are at the end of the chapter.

EXAMPLE 2

Refer to the thermocouple circuit in Figure 5. Suppose the thermocouple is measuring 200°C. Again, the circuit board is in an area where the ambient temperature can vary from 15°C to 35°C. The reference thermocouple is held at exactly 0°C. Determine the voltage across the op-amp circuit input terminals at the ambient temperature extremes.

Solution From Table 1 in Example 1, the thermocouple voltage is 0 V at 0°C. Since the reference thermocouple produces no voltage at 0°C and is completely independent of ambient temperature, there is no error due to an unwanted thermocouple junction in the measured voltage over the ambient temperature range. Therefore, the voltage across the circuit input terminals at both temperature extremes equals the measuring thermocouple voltage, which is **9.286 mV**.

Related Problem If the reference thermocouple were held at −100°C instead of 0°C, what would be the voltage across the circuit input terminals if the measuring thermocouple were at 400°C?

Compensation It is bulky and expensive to maintain a reference thermocouple at a fixed temperature (usually an ice bath is required). Another approach is to compensate for the unwanted thermocouple effect by adding a compensation circuit as shown in Figure 6. This is sometimes referred to as *cold-junction compensation.* The compensation circuit consists of a resistor and an integrated circuit temperature sensor with a temperature coefficient that matches that of the unwanted thermocouple.

The current source in the temperature sensor produces a current that creates a voltage drop, V_c, across the compensation resistor, R_c. The resistance is adjusted so that this voltage drop is equal and opposite the voltage produced by the unwanted thermocouple at a given

www.EngineeringBooksPdf.com

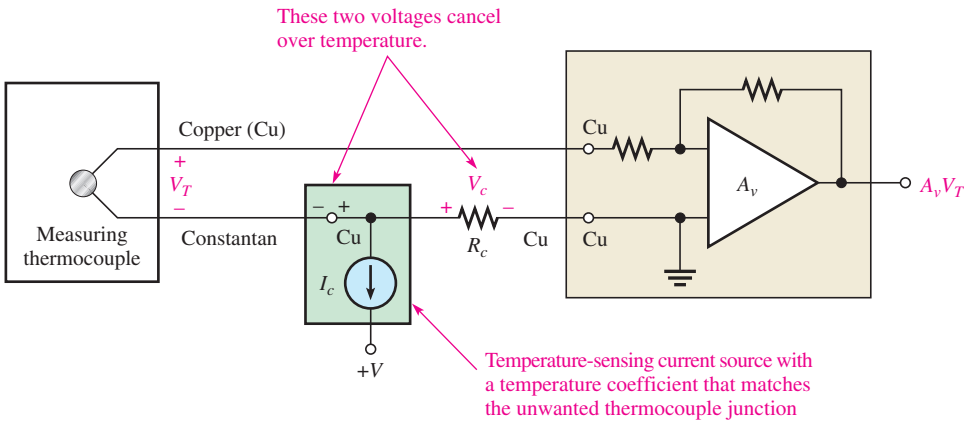

FIGURE 6

Simplified circuit for compensation of unwanted thermocouple effect.

temperature. When the ambient temperature changes, the current changes proportionally, so that the voltage across the compensation resistor is always approximately equal to the unwanted thermocouple voltage. Since the compensation voltage, V_c, is opposite in polarity to the unwanted thermocouple voltage, the unwanted voltage is effectively cancelled.

Most thermocouple applications require the cold-junction compensation illustrated in Figure 6 as well as other signal conditioning such as isolation and linearization. These functions are available in special integrated circuits and hybrid modules called *thermocouple signal conditioners*. The 1B51 is an example of a thermocouple signal conditioner. It includes a transformer isolation unit and is designed with very high common-mode rejection because thermocouples have a small signal, which is susceptible to interference, particularly in industrial environments. A built-in 3 Hz low-pass filter helps reject interfering signals such as power line pickup. The cutoff frequency is set to be very low because the thermocouple cannot respond immediately to temperature changes. The 1B51 generates its own input side power to provide channel-to-channel isolation when multiple thermocouples are used.

Signal conditioning is widely used in industrial environments, so sophisticated controllers with multiple isolated inputs and outputs have been developed for use with thermocouples and other sensors. Outputs from these controllers include wireless transmitters, USB, Ethernet, PCI, IEEE-488 and other computer interfaces, making it simple to log data on a computer or dedicated data logger.

Resistance Temperature Detectors (RTDs)

A second major type of temperature transducer is the RTD (resistance temperature detector). The **RTD** is a resistive device in which the resistance changes directly with temperature (positive temperature coefficient). The RTD is more nearly linear than the thermocouple. RTDs are constructed in either a wire-wound configuration or by a metal-film technique. The most common RTDs are made of either platinum, nickel, or nickel alloys.

Generally, RTDs are used to sense temperature in two basic ways. First, as shown in Figure 7(a), the RTD is driven by a current source and, since the current is constant, the change in voltage across it is proportional (by Ohm's law) to the change in its resistance with temperature. Second, as shown in Figure 7(b), the RTD is connected in a 3-wire bridge circuit; and the bridge output voltage is used to sense the change in the RTD resistance and, thus, the temperature.

As in the case of thermocouples, special signal-conditioning integrated circuits are available for RTDs. An example is the 1B41, which uses the same pinout as the 1B51, described previously for thermocouples. The 1B41 has an internal transformer-coupled isolation amplifier with high common-mode rejection. It generates its own input side power and includes special linearization circuits designed especially for RTDs.

The 3-Wire Bridge To avoid subjecting the three bridge resistors to the same temperature that the RTD is sensing, the RTD is usually remotely located to the point where temperature

www.EngineeringBooksPdf.com

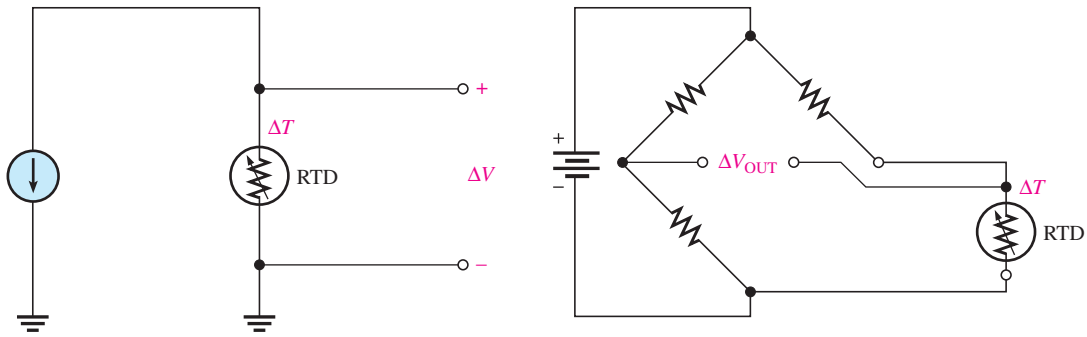

(a) A change in temperature, ΔT, produces a change in voltage, ΔV, across the RTD proportional to the change in RTD resistance when the current is constant.

(b) A change in temperature, ΔT, produces a change in bridge output voltage, ΔV_{OUT}, proportional to the change in RTD resistance.

▲ **FIGURE 7**

Basic methods of employing an RTD in a temperature-sensing circuit.

variations are to be measured and connected to the rest of the bridge by long wires. The resistance of the three bridge resistors must remain constant. The long extension wires to the RTD have resistance that can affect the accurate operation of the bridge.

Figure 8(a) shows the RTD connected in the bridge with a 2-wire configuration. Notice that the resistance of the long connecting wires is shown as "lumped" resistors R_A and R_B in Figure 8. These resistors are in the same leg of the bridge as the RTD. Recall that $V_{OUT} = 0$ V and the bridge is balanced when $R_{RTD} = R_3$ if $R_1 = R_2$. The wire resistances will throw the bridge off balance when $R_{RTD} = R_3$ and will cause an error in the output voltage for any value of the RTD resistance because they are in series with the RTD in the same leg of the bridge.

▶ **FIGURE 8**

Comparison of 2-wire and 3-wire bridge connections in an RTD circuit.

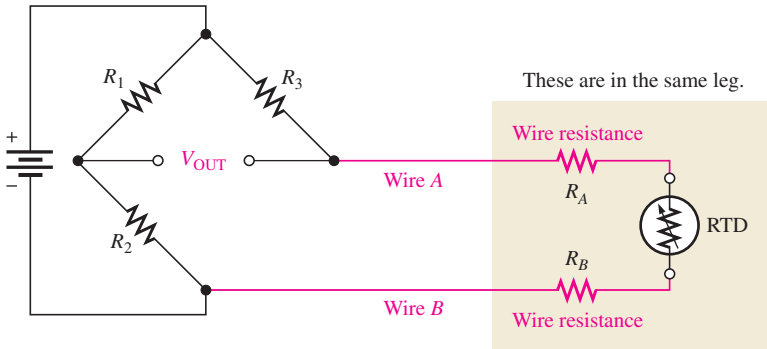

(a) Two-wire bridge connection

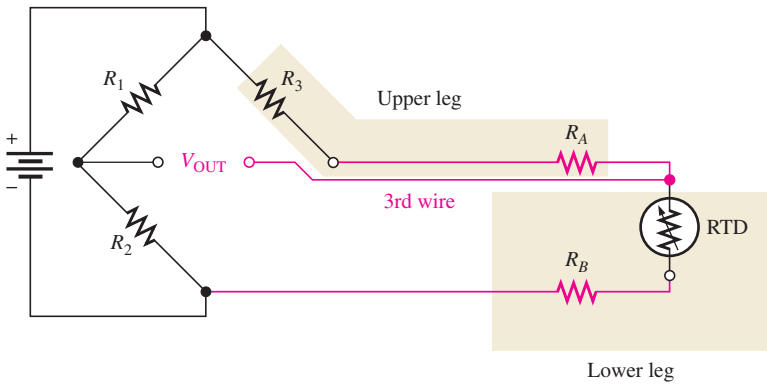

(b) Three-wire bridge connection

www.EngineeringBooksPdf.com

The 3-wire configuration in Figure 8(b) overcomes the wire resistance problem. By connecting a third wire to one end of the RTD as shown, the resistance of wire A is now placed in the same leg of the bridge as R_3 and the resistance of wire B is placed in the same leg of the bridge as the RTD. Because the wire resistances are now in opposite legs of the bridge, their effects will cancel if both wire resistances are the same (equal lengths of same type of wire). The resistance of the third wire has no effect; essentially no current goes through it because the output terminals of the bridge are open or are connected across a very high impedance. The balance condition is expressed as

$$R_{RTD} + R_B = R_3 + R_A$$

If $R_A = R_B$, then they cancel in the equation and the balance condition is completely independent of the wire resistances.

$$R_{RTD} = R_3$$

The method described here is important in many measurements that use a sensitive transducer and a bridge. It is often used in strain gauge measurements (described in Section 2).

Basic RTD Temperature-Sensing Circuits Two simplified RTD measurement circuits are shown in Figure 9. The circuit in part (a) is one implementation of an RTD driven by a constant current. The operation is as follows. From your study of basic op-amp circuits, recall that the input current and the current through the feedback path are essentially equal because the input impedance of the op-amp is ideally infinite. Therefore, the constant current through the RTD is set by the constant input voltage, V_{IN}, and the input resistance, R_1, because the inverting input is at virtual ground. The RTD is in the feedback path and, therefore, the output voltage of the op-amp is equal to the voltage across the RTD. As the resistance of the RTD changes with temperature, the voltage across the RTD also changes because the current is constant.

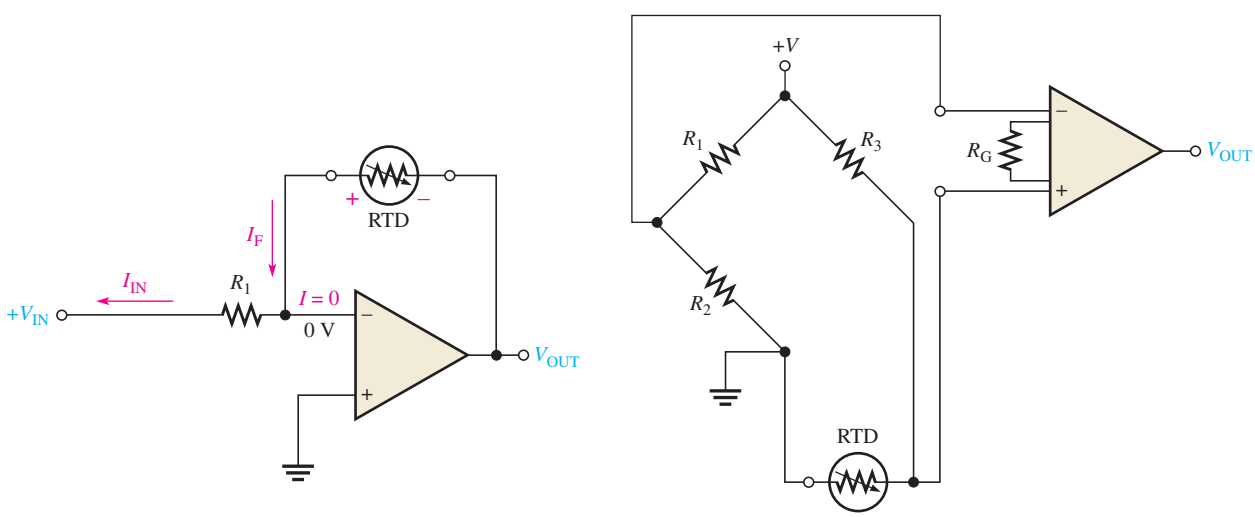

(a) Constant-current circuit

(b) Three-wire bridge circuit

▲ **FIGURE 9**

Basic RTD temperature-measuring circuits.

The circuit in Figure 9(b) shows a basic circuit in which an instrumentation amplifier is used to amplify the voltage across the 3-wire bridge circuit. The RTD forms one leg of the bridge; and as its resistance changes with temperature, the bridge output voltage also changes proportionally. The bridge is adjusted for balance ($V_{OUT} = 0$ V) at some reference temperature, say 0°C. This means that R_3 is selected to equal the resistance of the RTD at this reference temperature.

www.EngineeringBooksPdf.com

EXAMPLE 3

Determine the output voltage of the instrumentation amplifier in the RTD circuit in Figure 10 if the RTD resistance is 1320 Ω at the measured temperature.

▶ **FIGURE 10**

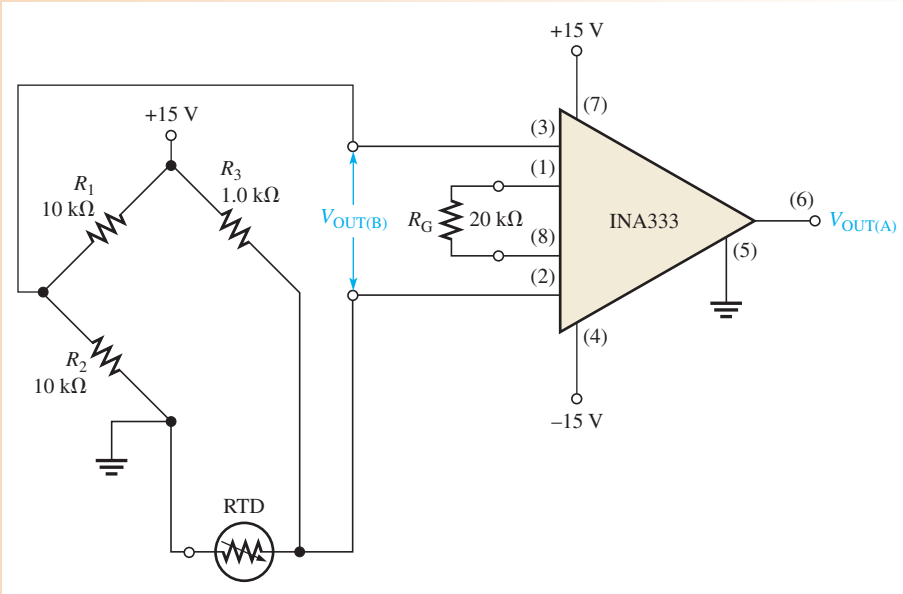

Solution The bridge output voltage is

$$V_{OUT(B)} = \left(\frac{R_{RTD}}{R_3 + R_{RTD}}\right)15\text{ V} - \left(\frac{R_2}{R_1 + R_2}\right)15\text{ V} = \left(\frac{1320\ \Omega}{2320\ \Omega}\right)15\text{ V} - \left(\frac{10\text{ k}\Omega}{20\text{ k}\Omega}\right)15\text{ V}$$
$$= 8.53\text{ V} - 7.5\text{ V} = 1.03\text{ V}$$

The equation for the voltage gain of the INA333 instrumentation amplifier is

$$R_G = \frac{100\text{ k}\Omega}{A_v - 1}$$

$$A_v = \frac{100\text{ k}\Omega}{R_G} + 1 = 5.0 + 1 = 6.0$$

The output voltage from the amplifier is

$$V_{OUT(A)} = (6.0)(1.03\text{ V}) = \mathbf{6.18\ V}$$

Related Problem What must be the nominal resistance of the RTD in Figure 10 to balance the bridge at 25°C? What is the amplifier output voltage when the bridge is balanced?

Thermistors

A third major type of temperature transducer is the **thermistor**, which is a resistive device made from a semiconductive material such as nickel oxide or cobalt oxide. The resistance of most thermistors changes inversely with temperature (negative temperature coefficient). The temperature characteristic for thermistors is more nonlinear than that for thermocouples or RTDs; in fact, a thermistor's temperature characteristic is essentially logarithmic. Also, like the RTD, the temperature range of a thermistor is more limited than that of a thermocouple. Thermistors have the advantage of a greater sensitivity than either thermocouples or RTDs and are generally less expensive. This means that their change in resistance per degree change in temperature is greater. Since they are both variable-resistance devices, the thermistor and the RTD can be used in similar circuits.

www.EngineeringBooksPdf.com

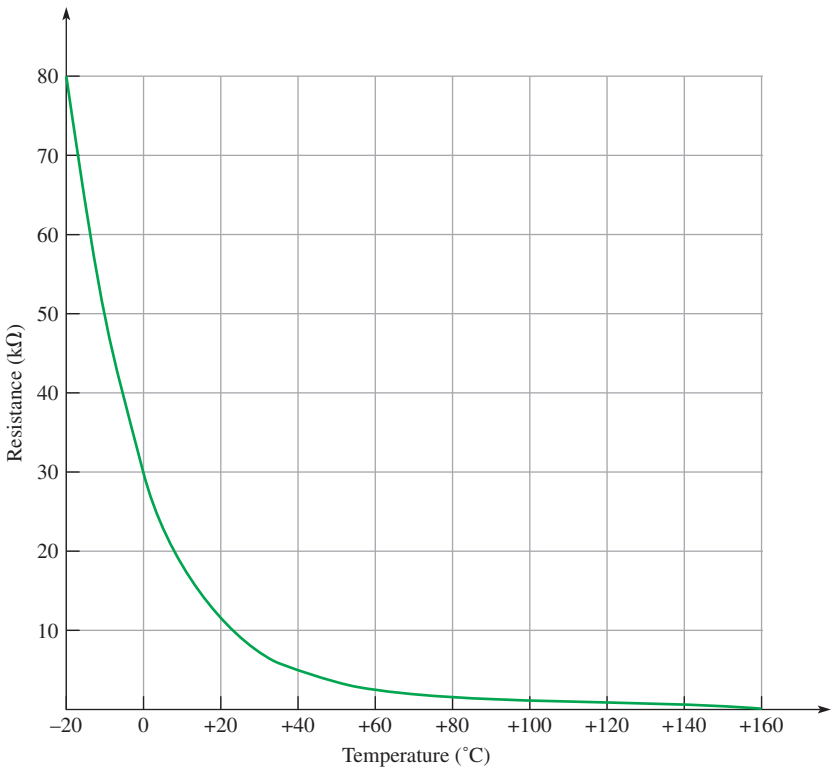

◀ FIGURE 11

Typical thermistor response.

Thermistors have a relatively narrow range of temperatures over which they can respond (about −40°C to 160°C) and are highly nonlinear; however, compensation circuits can make up for nonlinearity. Despite these shortcomings, thermistors have important advantages over other types of sensors when working within their temperature range. They are small, inexpensive, very sensitive, and can be highly accurate within their temperature range. Because they are small and have a small thermal mass, they can respond quickly to temperature change. A typical thermistor characteristic is shown in Figure 11.

Like the RTD, thermistors can be used in a constant-current configuration or a Wheatstone bridge. The constant-current configuration forces a constant current through the thermistor and the voltage drop produced is measured.

Applications for Thermistors Thermistors are used in many applications for which temperature monitoring is important. Heating systems use thermistors in thermostats to sense the temperature in a heated or cooled space and also to sense duct temperatures. The signals from these thermistors are used by a controller for turning on or off heat and fans. Automobiles use thermistors in engine and power-train management and control, inside temperature control including duct temperatures, and overheating sensors for monitoring coolant temperature. Medical applications include highly accurate patient thermometers and infant monitoring, temperature baths, and respiratory probes.

Zener-Based IC Precision Temperature Sensor

Various types of solid-state temperature sensors exploit various temperature dependencies in semiconductors, which include resistivity effects and the change in the base-emitter voltage with temperature of a forward-biased transistor. One type uses the zener diode breakdown voltage as a temperature indicator. The breakdown of a zener diode is directly proportional to the absolute (Kelvin) temperature. The zener breakdown voltage equals +10 mV/K. The absolute temperature in kelvins (K) is equal to 273 + °C. Unlike thermistors, the output of the zener temperature sensor is linear. This type of sensor has the advantage of being small, accurate, and linear; however, these sensors are limited in the temperature range over which they can operate (about −40°C to 150°C).

www.EngineeringBooksPdf.com

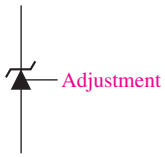

▲ FIGURE 12

Symbol for a zener-based temperature sensor.

The LM135, LM235, and LM335 are examples of zener-based temperature sensors and differ only in the range of temperatures over which they can operate. The symbol for this type of sensor is shown in Figure 12. Notice that it is a zener diode symbol but with an adjustment input for calibration purposes. It is not necessary to use the adjustment input unless high accuracy is required.

The LM135/LM235/LM335 is an integrated circuit available in different package styles. The circuit is much more complex than a simple zener diode but, in effect, displays a very precise zener characteristic and, most importantly, an output (reverse voltage) that varies linearly with temperature as previously mentioned.

The adjustment input allows you to calibrate the device at one temperature if high accuracy is required. By calibrating the output correctly at one temperature, the output at all temperatures is correct because of the linearity.

SECTION 1 CHECKUP

Answers are at the end of the chapter.

1. What is a thermocouple?
2. How can temperature be measured with a thermocouple?
3. What is an RTD and how does its operation differ from a thermocouple?
4. What is the primary operational difference between an RTD and a thermistor?
5. Of the three devices introduced in this section, which one would most likely be used to measure extremely high temperatures?

2 STRAIN, PRESSURE, AND FLOW RATE MEASUREMENTS

A variety of applications require the measurement of strain, pressure, and flow rate. The flow rate of a fluid can be measured indirectly by measuring pressure.

After completing this section, you should be able to

- **Describe methods of measuring strain, pressure, and flow rate**
  - Explain how a strain gauge operates
  - Discuss strain gauge circuits
  - Explain how pressure transducers work
  - Discuss pressure-measuring circuits
  - List several pressure transducer applications

The Strain Gauge

Strain is the deformation, either expansion or compression, of a material due to a force acting on it. For example, a metal rod or bar will lengthen slightly when an appropriate force is applied, as illustrated in Figure 13(a). Also, if a metal plate is bent, there is an expansion of the upper surface, called *tensile strain,* and a compression of the lower surface, called *compressive strain,* as shown in Figure 13(b).

Strain gauges are based on the principle that the resistance of a wire increases if its length increases and decreases if its length decreases. This is expressed by the following formula:

Equation 1

$$R = \frac{\rho L}{A}$$

This formula states that the resistance of a wire depends directly on the resistivity (ρ) and the length (L) and inversely on the cross-sectional area (A).

www.EngineeringBooksPdf.com

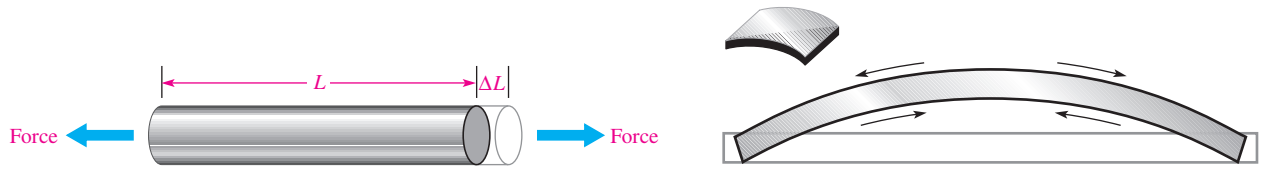

(a) Strain occurs as length changes from L to $L + \Delta L$ when force is applied.

(b) Strain occurs when the flat plate is bent, causing the upper surface to expand and the lower surface to contract.

▲ **FIGURE 13**

Examples of strain.

A **strain gauge** is basically a long very thin strip of resistive material that is bonded to the surface of an object on which strain is to be measured, such as a wing or tail section of an airplane under test. When a force acts on the object to cause a slight elongation, the strain gauge also lengthens proportionally and its resistance increases. Most strain gauges are formed in a pattern similar to that in Figure 14(a) to achieve enough length for a sufficient resistance value in a smaller area. It is then placed along the line of strain as indicated in Figure 14(b).

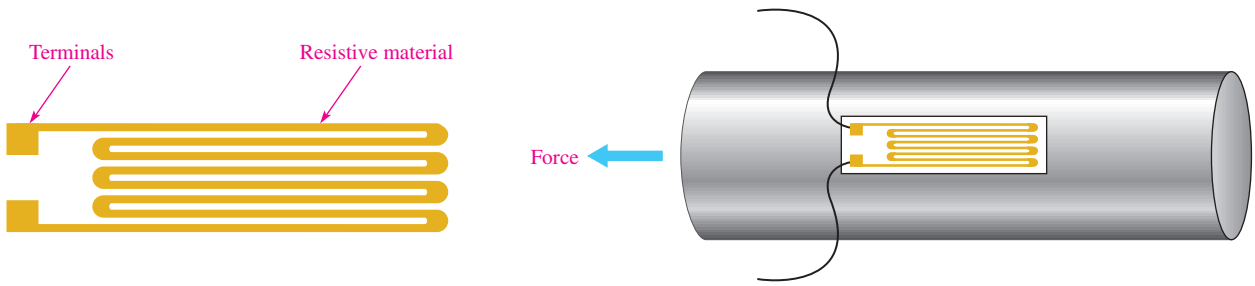

(a) Typical strain gauge configuration.

(b) The strain gauge is bonded to the surface to be measured along the line of force. When the surface lengthens, the strain gauge stretches.

▲ **FIGURE 14**

A simple strain gauge and its placement.

The Gauge Factor of a Strain Gauge An important characteristic of strain gauges is the **gauge factor** (***GF***), which is defined as the ratio of the fractional change in resistance to the fractional change in length along the axis of the gauge. For metallic strain gauges, the *GF*s are typically around 2. The concept of gauge factor is illustrated in Figure 15 and expressed in Equation 2 where R is the nominal resistance and ΔR is the change in

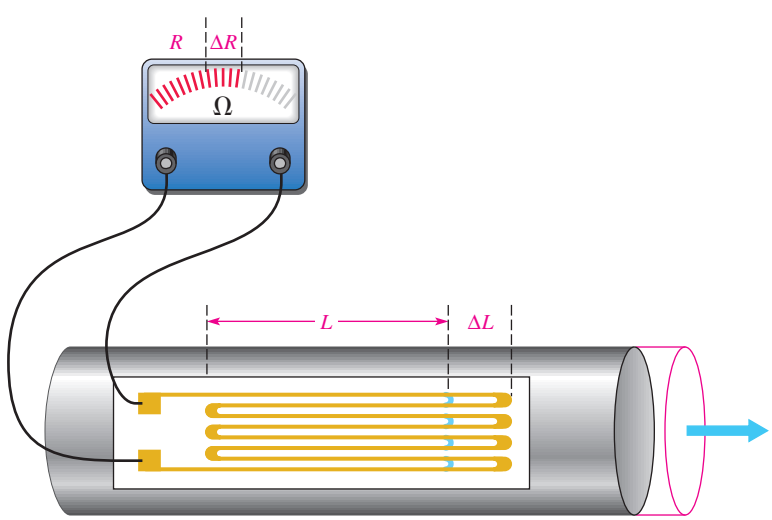

◀ **FIGURE 15**

Illustration of gauge factor.

www.EngineeringBooksPdf.com

resistance due to strain. The fractional change in length ($\Delta L/L$) is designated strain (ε) and is usually expressed in parts per million, called *microstrain* (designated $\mu\varepsilon$).

Equation 2

$$GF = \frac{\Delta R/R}{\Delta L/L}$$

EXAMPLE 4

A certain material being measured under stress undergoes a strain of 5 parts per million (5 $\mu\varepsilon$). The strain gauge has a nominal (unstrained) resistance of 320 Ω and a gauge factor of 2.0. Determine the resistance change in the strain gauge.

Solution

$$GF = \frac{\Delta R/R}{\Delta L/L} = \frac{\Delta R/R}{\varepsilon}$$

$$\Delta R = (GF)(R)(\varepsilon) = 2.0(320\ \Omega)(5 \times 10^{-6}) = \mathbf{3.2\ m\Omega}$$

Related Problem If the strain in this example is 8 $\mu\varepsilon$, how much does the resistance change?

Basic Strain Gauge Circuits

Because a strain gauge exhibits a resistance change when the quantity it is sensing changes, it is typically used in circuits similar to those used for RTDs. The basic difference is that strain instead of temperature is being measured. Therefore, strain gauges are usually applied in bridge circuits or in constant-current-driven circuits, as shown in Figure 16. They can be used in applications in the same way as RTDs and thermistors. The 1B31 is an example of a strain gauge signal conditioner. The 1B31 includes an instrumentation amplifier, a low-pass filter, and adjustable transducer excitation.

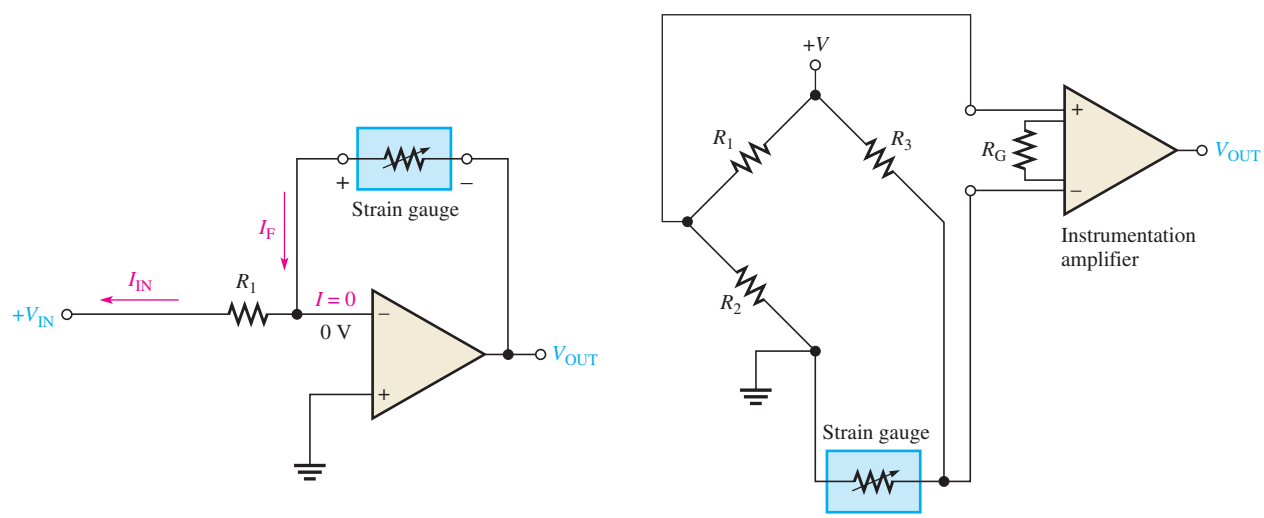

(a) Constant-current circuit

(b) Three-wire bridge circuit

▲ **FIGURE 16**

Basic strain-measuring circuits.

Pressure Transducers

Pressure transducers are devices that exhibit a change in resistance proportional to a change in pressure. Basically, pressure sensing is accomplished using a strain gauge bonded to a flexible diaphragm as shown in Figure 17(a). Figure 17(b) shows the diaphragm with no net pressure exerted on it. When a net positive pressure exists on one side of the

www.EngineeringBooksPdf.com

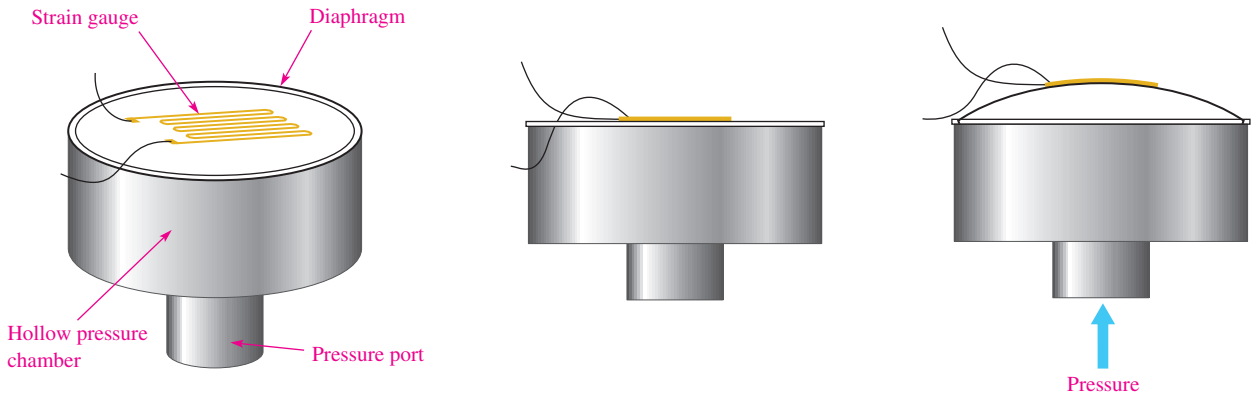

(a) Basic pressure gauge construction

(b) With no net pressure on diaphragm, strain gauge resistance is at its nominal value (side view).

(c) Net pressure forces diaphragm to expand, causing elongation of the strain gauge and thus an increase in its resistance.

▲ **FIGURE 17**

A simplified pressure sensor constructed with a strain gauge bonded to a flexible diaphragm.

diaphragm, as shown in Figure 17(c), the diaphragm is pushed upward and its surface expands. This expansion causes the strain gauge to lengthen and its resistance to increase.

Pressure transducers typically are manufactured using a foil strain gauge bonded to a stainless steel diaphragm or by integrating semiconductor strain gauges (resistors) in a silicon diaphragm. Either way, the basic principle remains the same.

Pressure transducers come in three basic configurations in terms of relative pressure measurement. The absolute pressure transducer measures applied pressure relative to a vacuum, as illustrated in Figure 18(a). The gauge pressure transducer measures applied pressure relative to the pressure of the surroundings (ambient pressure), as illustrated in Figure 18(b). The differential pressure transducer measures one applied pressure relative to another applied pressure, as shown in Figure 18(c). Some transducer configurations include circuitry such as bridge completion circuits and op-amps within the same package as the sensor itself, as indicated.

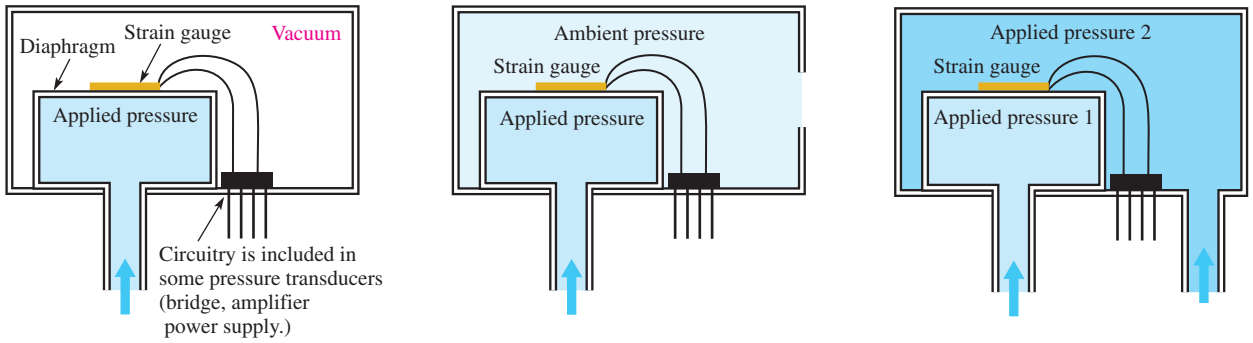

(a) Absolute pressure transducer

(b) Gauge pressure transducer

(c) Differential pressure transducer

▲ **FIGURE 18**

Three basic types of pressure transducers.

Pressure-Measuring Circuits

Because pressure transducers are devices in which the resistance changes with the quantity being measured, they are usually in a bridge configuration as shown by the basic op-amp

www.EngineeringBooksPdf.com

bridge circuit in Figure 19(a). In some cases, the complete circuitry is built into the transducer package, and in other cases the circuitry is external to the sensor. The symbols in parts (b) through (d) of Figure 19 are sometimes used to represent the complete pressure transducer with an amplified output. The symbol in part (b) represents the absolute pressure transducer, the symbol in part (c) represents the gauge pressure transducer, and the symbol in part (d) represents the differential pressure transducer.

▶ **FIGURE 19**

A basic pressure transducer circuit and symbols.

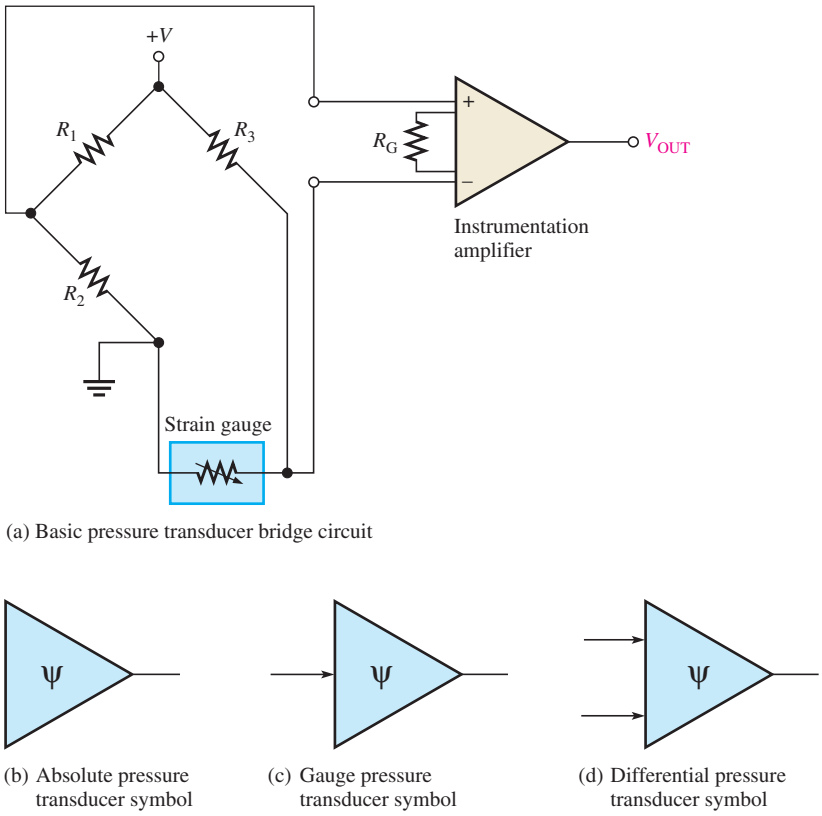

(a) Basic pressure transducer bridge circuit

(b) Absolute pressure transducer symbol

(c) Gauge pressure transducer symbol

(d) Differential pressure transducer symbol

Pressure Transducer Applications Pressure transducers are used anywhere there is a need to determine the pressure of a substance. In medical applications, pressure transducers are used for blood pressure measurement; in aircraft, pressure transducers are used for altitude pressure, cabin pressure, and hydraulic pressure; in automobiles, pressure transducers are used for fuel flow, oil pressure, brake line pressure, manifold pressure, and steering system pressure, to name a few applications.

Flow Rate Measurement

One common method of measuring the flow rate of a fluid through a pipe is the differential-pressure method. A flow restriction device such as a Venturi section (or other type of restriction such as an orifice) is placed in the flow stream. The Venturi section is formed by a narrowing of the pipe, as indicated in Figure 20. Although the velocity of the fluid increases as it flows through the narrow channel, the volume of fluid per minute (volumetric flow rate) is constant throughout the pipe.

Because the velocity of the fluid increases as it goes through the restricted area, the pressure also increases. If pressure is measured at a wide point and at a narrow point, the flow rate can be determined because flow rate is proportional to the square root of the differential pressure, as shown in Figure 20.

www.EngineeringBooksPdf.com

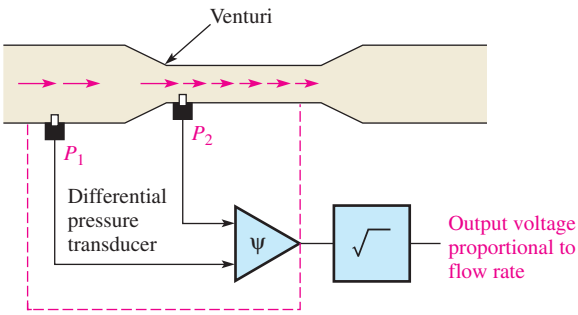

FIGURE 20

A basic method of flow rate measurement.

SECTION 2 CHECKUP

1. Describe a basic strain gauge.
2. Describe a basic pressure gauge.
3. List three types of pressure gauges.

3 MOTION MEASUREMENT

Transducers covered in this section enable the measurement of various forms of motion.

After completing this section, you should be able to

- **Describe methods of measuring motion**
  - Explain the purpose of a displacement transducer
  - Briefly describe an LVDT
  - Discuss velocity transducers
  - Discuss acceleration transducers

Displacement Transducers

Displacement is a quantity that indicates the change in position of a body or point. Angular displacement refers to a rotation that can be measured in degrees or radians. Displacement transducers can be either contacting or noncontacting.

Contacting transducers typically use a sensing shaft with a coupling device to follow the position of the measured quantity. A contacting type of displacement sensor that relates a change in inductance to displacement is the linear variable differential transformer (LVDT). The sensing shaft is connected to a moving magnetic core inside a specially wound transformer. A typical LVDT is shown in Figure 21(a). The primary of the transformer is in line and located between two identical secondaries. The primary winding is excited with ac (usually in the range of 1 to 5 kHz). When the core is centered, the voltage induced in each secondary is equal. As the core moves off center, the voltage in one secondary will be greater than the other. With the demodulator circuit shown, the polarity of the output changes as the core passes the center position, as shown in part (b). The transducer has excellent sensitivity, linearity, and repeatability.

Noncontacting displacement transducers include optical and capacitive transducers. Photocells can be arranged to observe light through holes in an encoding disk or to count fringes painted on the surface to be measured. Optical systems are fast; but noise, including

HANDS ON TIP

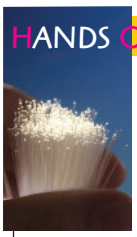

The development of tiny, low-powered motion sensors that can be readily mass-produced has opened new possibilities for applications. The sensors can operate on as little as 1 mW of power. One potential application for these tiny sensors is in the field of medicine, where implanted sensors can help orthopedic surgeons monitor the progress of repairs.

www.EngineeringBooksPdf.com

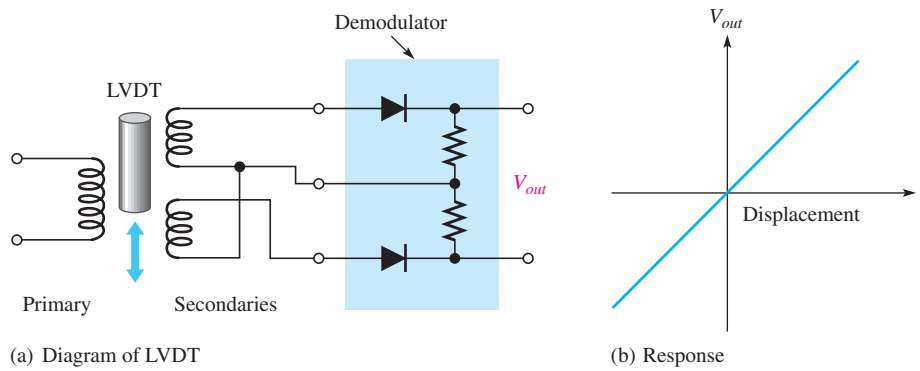

▲ FIGURE 21

LVDT displacement transducers.

background light sources, can produce spurious signals in optical sensors. It is useful to build hysteresis into the system if noise is a problem.

Fiber-optic sensors make excellent proximity detectors for close ranges. Reflective sensors use two fiber bundles, one for transmitting light and the other for receiving light from a reflective surface, as illustrated in Figure 22. Light is transmitted in the fiber bundle without any significant attenuation. When it leaves the transmitting fiber bundle, it forms a spot on the target that is inversely proportional to the square of the distance. The receiving bundle is aimed at the spot and collects the reflected light to an optical sensor. The light intensity detected by the receiving bundle depends on the physical size and arrangement of the fibers as well as the distance to the spot and the reflecting surface, but the technique can respond to distances approaching 1 microinch. The major disadvantage is limited dynamic range.

▶ FIGURE 22

Fiber-optic proximity detector.

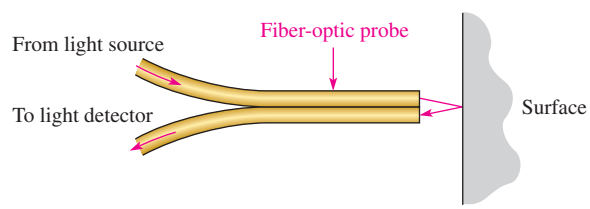

Capacitive sensors can be made into very sensitive displacement and proximity transducers. The capacitance is varied by moving one of the plates of a capacitor with respect to the second plate. The moving plate can be any metallic surface such as the diaphragm of a capacitive microphone or a surface that is being measured. The capacitor can be used to control the frequency of a resonant circuit to convert the capacitive change into a usable electrical output.

Velocity Transducers

Velocity is defined as the rate of change of displacement. It follows that velocity can be determined indirectly with a displacement sensor and measuring the time between two positions. A direct measurement of velocity is possible with certain transducers that have an output proportional to the velocity to be measured. These transducers can respond to either linear or angular velocity. Linear velocity transducers can be constructed using a permanent magnet inside a concentric coil, forming a simple motor by generating a voltage proportional to the velocity. Either the coil or the magnet can be fixed and the other moved with respect to the fixed component. The output is taken from the coil.

A variety of transducers are designed to measure angular velocity. Tachometers, a class of angular velocity transducers, provide a dc or ac voltage output. A dc tachometer is

www.EngineeringBooksPdf.com

basically a small generator with a coil that rotates in a constant magnetic field. A voltage is induced in the coil as it rotates in the magnetic field. The average value of the induced voltage is proportional to the speed of rotation, and the polarity is indicative of the direction of rotation, an advantage with dc tachometers. AC tachometers can be designed as generators that provide an output frequency that is proportional to the rotational speed.

Another technique for measuring angular velocity is to rotate a shutter over a photosensitive element. The shutter interrupts a light source from reaching the photocells, causing the output of the photocells to vary at a rate proportional to the rotational speed.

Acceleration Transducers

Acceleration is usually measured by use of a spring-supported seismic mass, mounted in a suitable enclosure as shown in Figure 23. Damping is provided by a dashpot, which is a mechanical device to reduce the vibration. The relative motion between the case and the mass is proportional to the acceleration. A secondary transducer such as a resistive displacement transducer or an LVDT is used to convert the relative motion to an electrical output. Ideally, the mass does not move when the case accelerates because of its inertia; in practice, it moves because of forces applied to it through the spring. The accelerometer has a natural frequency, the period of which should be shorter than the time required for the measured acceleration to change. Accelerometers used to measure vibration should also be used at frequencies less than the natural frequency.

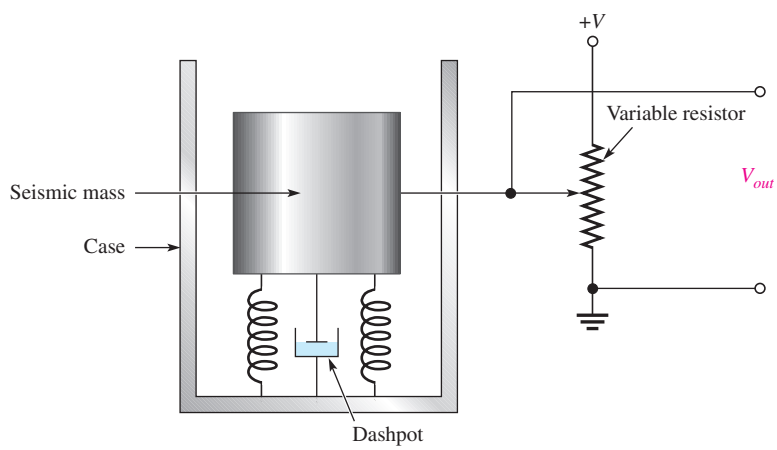

FIGURE 23

A basic accelerometer. Motion is converted to a voltage by the variable resistor.

An accelerometer that uses the basic principle of the LVDT can be constructed to measure vibration. The mass is made from a magnet that is surrounded with a coil. Voltage induced in the coil is a function of the acceleration.

Another type of accelerometer uses a piezoelectric crystal in contact with the seismic mass. The crystal generates an output voltage in response to forces induced by the acceleration of the mass. Piezoelectric crystals are small in size and have a natural frequency that is very high; they can be used to measure high-frequency vibration. The drawback to piezoelectric crystals is that the output is very low and the impedance of the crystal is high, making it subject to problems from noise.

SECTION 3 CHECKUP

1. What does LVDT stand for?
2. What does an LVDT measure?
3. What is used to measure angular velocity?

www.EngineeringBooksPdf.com

4 SAMPLE-AND-HOLD CIRCUITS

In the previous sections you learned how certain quantities can be measured using transducer circuits. The resulting analog voltage produced by a transducer is often converted to digital form so that it can be processed by a computer or a digital signal processor (DSP). The conversion of an analog signal to digital utilizes a sample-and-hold circuit, which is covered in this section, followed by an analog-to-digital converter (ADC), which is discussed in the next section.

After completing this section, you should be able to

- **Discuss the operation of a sample-and-hold circuit**
  - Describe tracking in a sample-and-hold circuit
  - Define *aperture time, aperture jitter, acquisition time, droop,* and *feedthrough*

A **sample-and-hold** circuit samples an analog input voltage at a certain point in time and retains or holds the sampled voltage for an extended time after the sample is taken. The sample-and-hold process keeps the sampled analog voltage constant for the length of time necessary to allow an analog-to-digital converter (ADC) to convert the voltage to digital form.

A basic sample-and-hold circuit consists of an analog switch, a capacitor, and input and output amplifiers as shown in Figure 24. The analog switch samples the analog input voltage through the input amplifier, the capacitor (C_H) stores or holds the sampled voltage for a period of time, and the output amplifier provides a high input impedance to prevent the capacitor from discharging quickly.

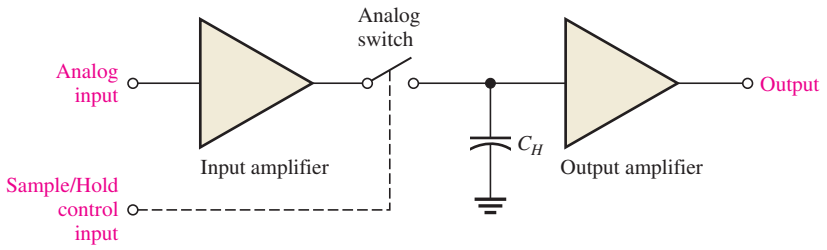

▶ **FIGURE 24**

A basic sample-and-hold circuit.

As illustrated in Figure 25, a relatively narrow control voltage pulse closes the analog switch and allows the capacitor to charge to the value of the input voltage. The switch then opens, and the capacitor holds the voltage for a long period of time because of the very high impedance discharge path through the op-amp input.

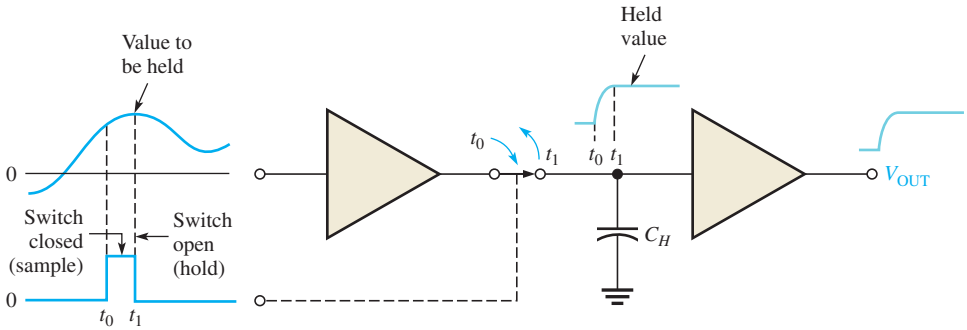

▶ **FIGURE 25**

Basic action of a sample-and-hold circuit.

www.EngineeringBooksPdf.com

A more detailed sample-and-hold circuit is shown in Figure 26. The analog switch is implemented with a JFET.

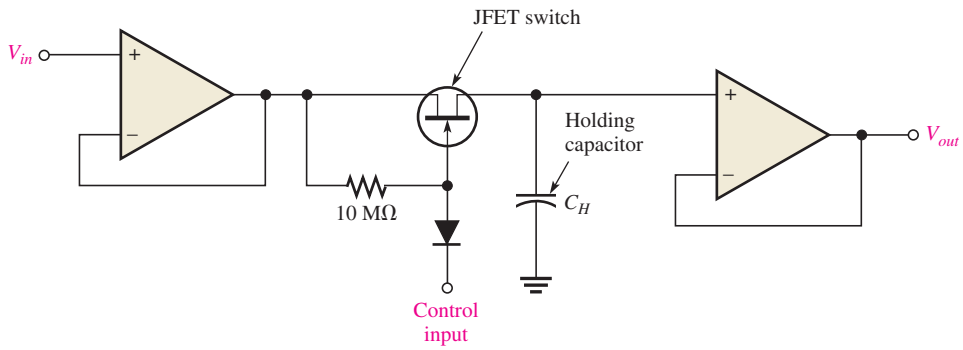

▲ **FIGURE 26**

Sample-and-hold circuit.

Perhaps a more appropriate name for the sample-and-hold process is sample/track-and-hold because the circuit actually tracks the input voltage during the sample interval. As indicated in Figure 27, the output follows the input during the time that the control voltage is high; and when the control voltage goes low, the last voltage is held until the next sample interval.

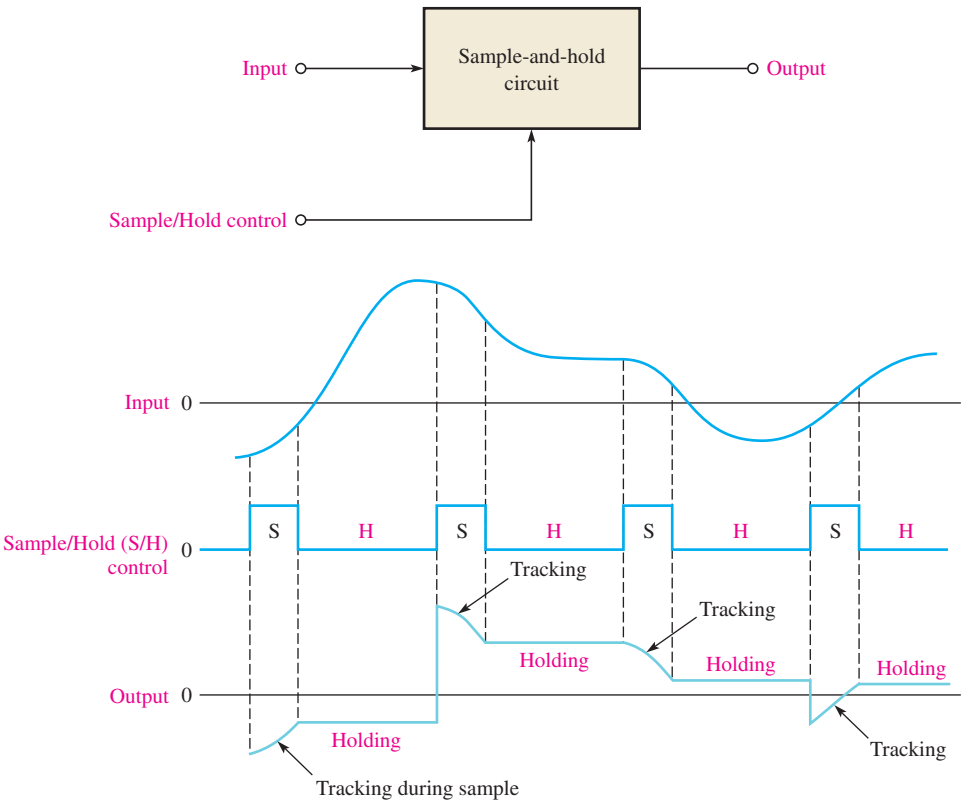

▲ **FIGURE 27**

Example of tracking during a sample-and-hold sequence.

www.EngineeringBooksPdf.com

EXAMPLE 5

Determine the output voltage waveform for the sample-and-hold circuit in Figure 28, given the input and control voltage waveforms.

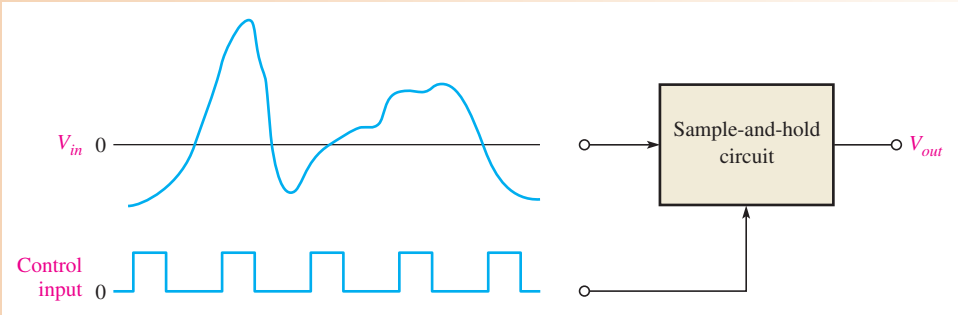

▲ FIGURE 28

Solution During the time that the control voltage is high, the analog switch is closed and the circuit is tracking the input. When the control voltage goes low, the analog switch opens; and the last voltage value is held at a constant level until the next time the control voltage goes high. This is shown in Figure 29.

▶ FIGURE 29

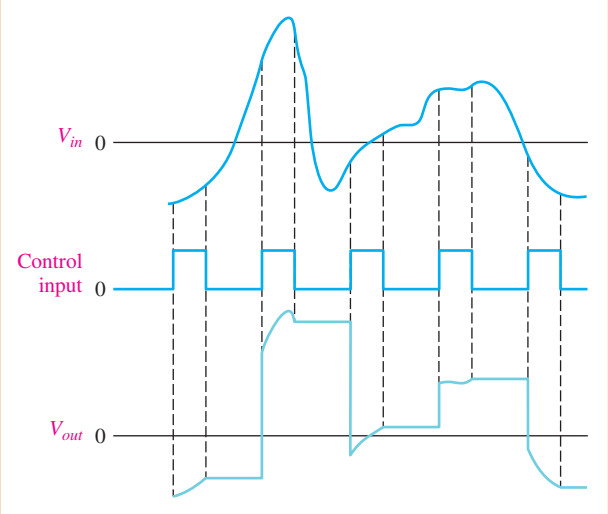

Related Problem Draw the output voltage waveform for Figure 28 if the control voltage frequency is reduced by half with the same control input pulse width.

Performance Specifications

Several specifications apply to sample-and-hold circuits. These include the aperture time, aperture jitter, acquisition time, droop, and feedthrough. Each of these parameters is illustrated in Figure 30 for an example input voltage waveform.

- **Aperture time**—the time for the analog switch to fully open after the control voltage switches from its sample level to its hold level. Aperture time produces a delay in the effective sample point.
- **Aperture jitter**—the uncertainty in the aperture time.
- **Acquisition time**—the time required for the device to reach its final value when the control voltage switches from its hold level to its sample level.

www.EngineeringBooksPdf.com

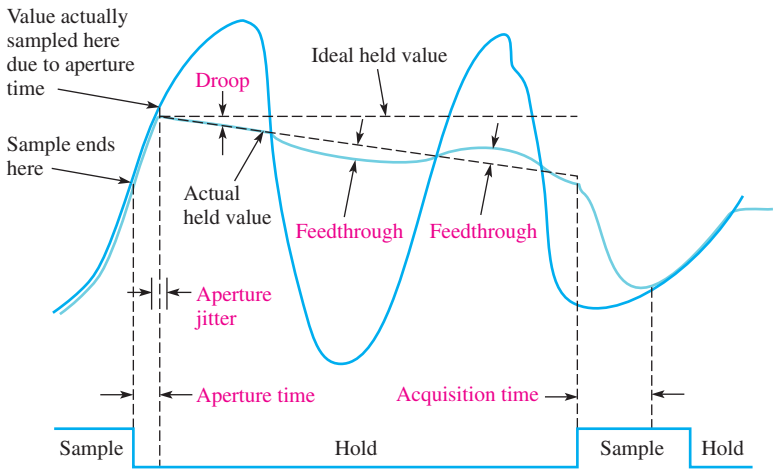

▲ **FIGURE 30**

Sample-and-hold circuit specifications. The effects are exaggerated for clarity. The dark blue curve is input voltage waveform; the light blue curve is output voltage.

- **Droop**—the change in voltage from the sampled value during the hold interval because of charge leaking off of the hold capacitor.
- **Feedthrough**—the component of the output voltage that follows the input signal after the analog switch is opened. The inherent capacitance from the input to the output of the switch causes feedthrough.

SECTION 4 CHECKUP

1. What is the basic function of a sample-and-hold circuit?
2. In reference to the output of a sample-and-hold circuit, what does droop mean?
3. Define *aperture time.*
4. What is acquisition time?

5 ANALOG-TO-DIGITAL CONVERSION

In many applications, it is necessary to convert measured analog data to digital form for processing in a computer or other digital device. The analog output of a sample-and-hold circuit is applied to an analog-to-digital converter (ADC). The output of the ADC is a series of binary codes that represent each of the sampled values of the input signal.

After completing this section, you should be able to

- **Explain the operation of an analog-to-digital converter**
  - Discuss what an ADC does
  - Explain how a sample-and-hold circuit and ADC work together
  - Define *resolution, conversion time,* and *quantization error*
  - Discuss the sampling theory
  - Describe a simultaneous (flash) ADC

www.EngineeringBooksPdf.com

Analog-to-digital conversion is the process of converting the output of the sample-and-hold circuit to a series of binary codes that represent the amplitude of the analog input at each of the sample times. The sample-and-hold process keeps the amplitude of the analog input signal constant between sample pulses; therefore, the analog-to-digital conversion can be done using a constant value rather than having the analog signal change during a conversion interval, which is the time between sample pulses. Figure 31 illustrates the basic function of an **ADC** (analog-to-digital converter). The sample intervals are indicated by dashed lines. The tracking intervals are not shown on the S/H output because they are assumed to be very short and can be neglected.

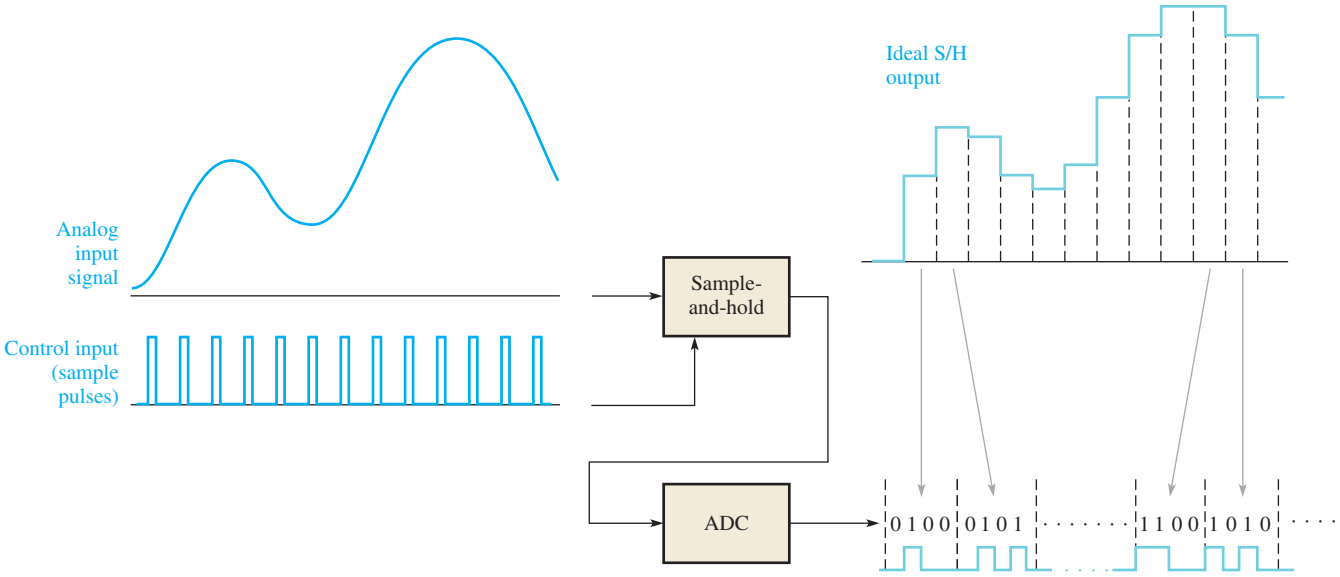

▲ FIGURE 31

The basic idea of analog-to-digital conversion.

Conversion Parameters

Resolution An analog-to-digital converter (ADC) translates a continuous analog signal into a series of binary numbers. Each binary number represents the value of the analog signal at the time of conversion. The **resolution** of an ADC can be expressed as the number of bits (binary digits) used to represent each value of the analog signal. A 4-bit ADC can represent sixteen different values of an analog signal because $2^4 = 16$. An 8-bit ADC can represent 256 different values of an analog signal because $2^8 = 256$. A 12-bit ADC can represent 4096 different values of the analog signal because $2^{12} = 4096$. The more bits, the more accurate is the conversion and the greater is the resolution because more values of a given analog signal can be represented.

Conversion Time In addition to resolution, another important characteristic of ADCs is **conversion time**. The conversion of an analog voltage into a digital quantity is not an instantaneous event, but it is a process that takes a certain amount of time. The conversion time can range from microseconds for fast converters to milliseconds for slower devices. Conversion time is illustrated in a basic way in Figure 32. As you can see, the analog voltage (v_0) to be converted occurs at time t_0 but the conversion is not complete until time t_1.

Quantization Error The term **quantization** in this context refers to determining a value for a changing analog voltage. Ideally, we would like to assign a number to the voltage at a given instant and convert it immediately to digital form. This is, of course, impossible

www.EngineeringBooksPdf.com

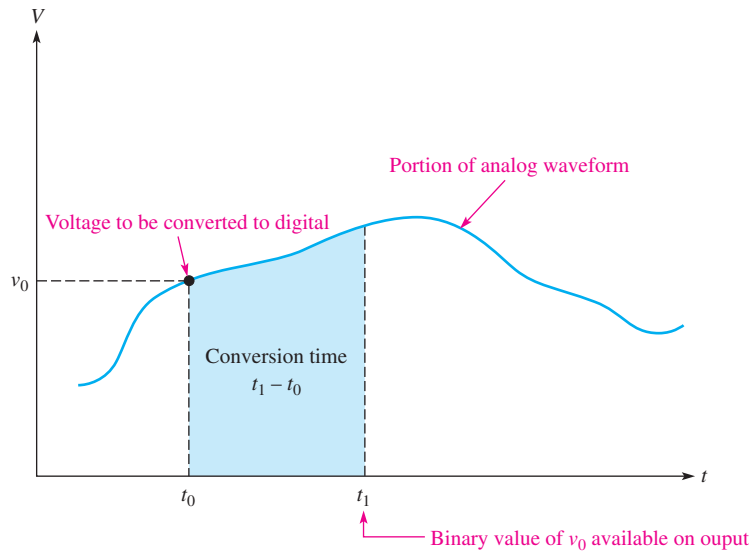

FIGURE 32

An illustration of analog-to-digital conversion time.

because of the conversion time of ADCs. Since an analog signal may change during a conversion time, the voltage at the end of the conversion time may not be the same as it was at the beginning. This change in voltage during the conversion time, Δv, produces what is called the **quantization error**, as illustrated in Figure 33.

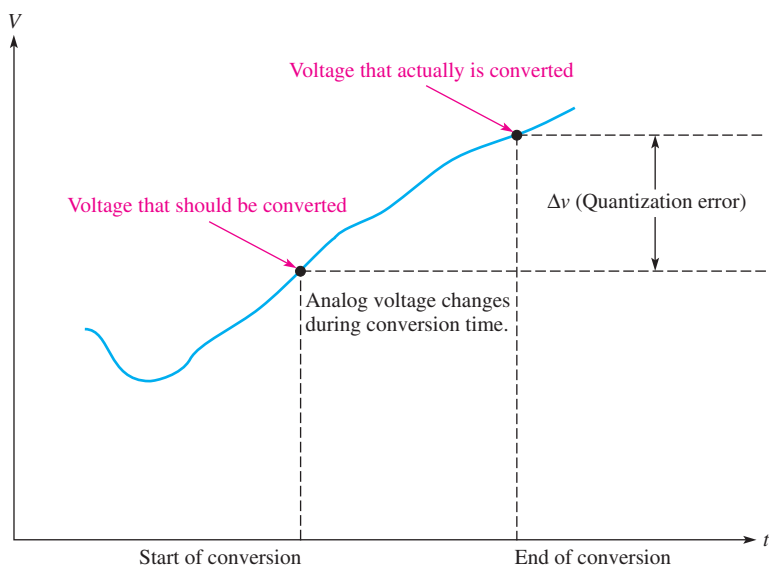

FIGURE 33

Illustration of the source of quantization errors in A/D conversion.

One way to avoid or at least minimize quantization error is to use a sample-and-hold circuit at the input to the ADC. As you learned in Section 4, a sample-and-hold circuit quickly samples the analog input and then holds the sampled voltage for a certain time. When used in conjunction with an ADC, the sample-and-hold is held constant for the duration of the conversion time. This allows the ADC to convert a constant voltage to digital form and avoids the quantization error. A basic illustration of this process is shown in Figure 34. When compared to the conversion in Figure 33, you can see that a more accurate value of the analog input at the desired sample point is achieved.

www.EngineeringBooksPdf.com

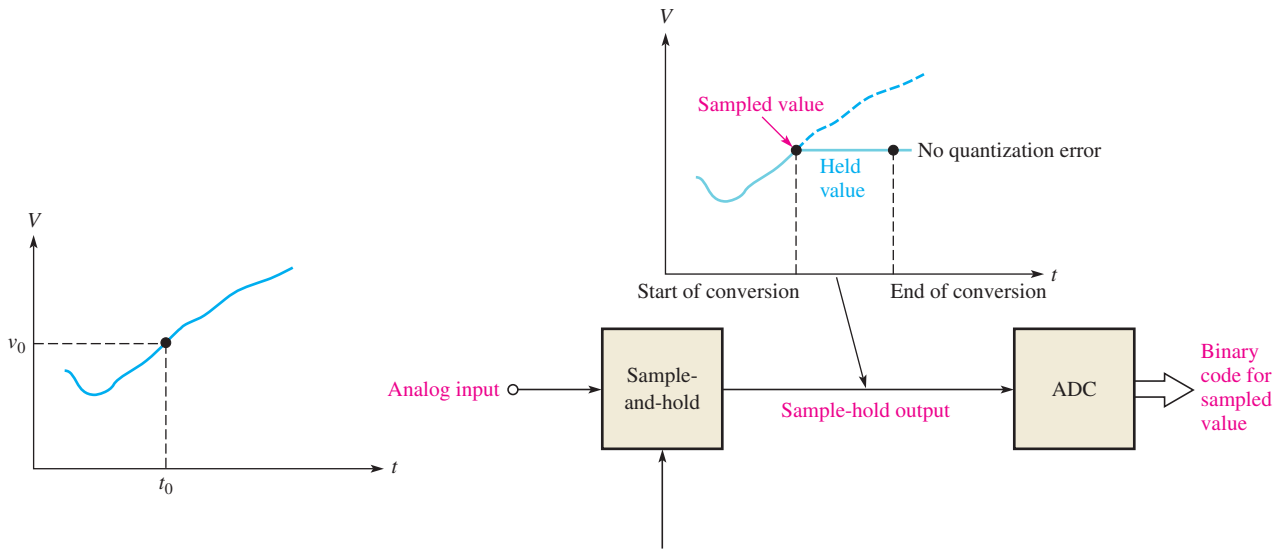

▲ **FIGURE 34**

Using a sample-and-hold circuit to avoid quantization error.

Sampling

In A/D conversion, an analog waveform is sampled at a given point and the sampled value is then converted to a binary number. Since it takes a certain interval of time to accomplish the conversion, the number of samples of an analog waveform during a given period of time is limited. For example, if a certain ADC can make one conversion in 1 ms, it can make 1000 conversions in one second. That is, it can convert 1000 different analog values to digital form in a one-second interval.

In order to represent an analog waveform, the sample rate must be greater than twice the maximum frequency component of the analog signal. The theoretical minimum limit of the sampling rate is known as the **Nyquist rate** or frequency. At the Nyquist rate, an analog signal is sampled and converted two times per cycle. In practice, however, a signal must be sampled more than twice per cycle. Obviously, a greater number of samples per cycle of the analog signal results in a more accurate representation of the analog signal. This is illustrated in Figure 35 for two different sample rates. The light blue waveforms are the sample-and-hold outputs for two sample rates. As you can see, the higher rate produces a more accurate result.

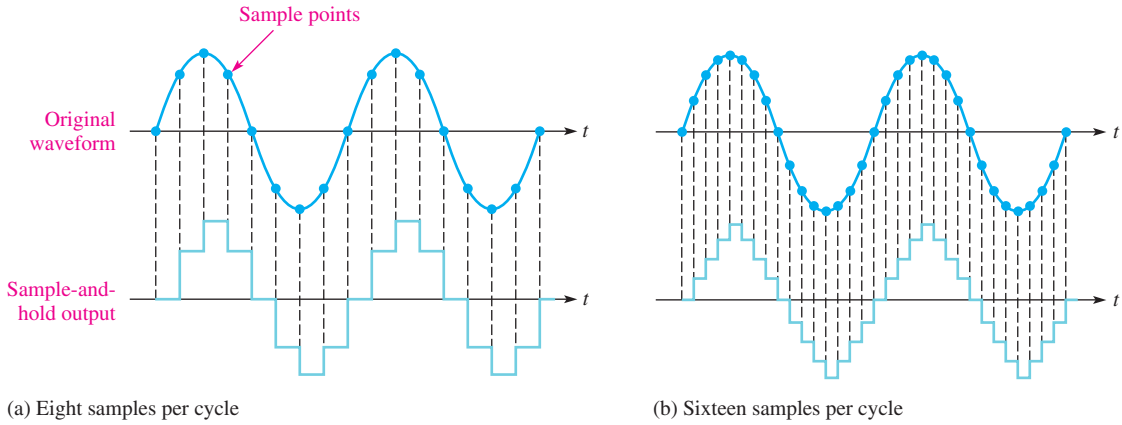

(a) Eight samples per cycle

(b) Sixteen samples per cycle

▲ **FIGURE 35**

Illustration of two sampling rates.

www.EngineeringBooksPdf.com

A Method of Analog-to-Digital Conversion

Several methods can be used in analog-to-digital conversion, and we will briefly look at one called the *simultaneous* or *flash* method. Another commonly used method is known as successive approximation.

The **flash** method uses several comparators to compare reference voltages with the analog input from a sample-and-hold circuit. When the analog voltage exceeds the reference level for a given comparator, a high-level output is produced by the comparator. Figure 36 shows a simplified flash ADC that uses seven comparators for a conversion to three binary bits. The comparator outputs go to a priority encoder, which is a digital circuit that produces a binary output code that represents the level of the input. A 4-bit ADC of this type requires fifteen comparators. In general, $2^n - 1$ comparators are required for conversion to an n-bit binary code. The large number of comparators necessary for a practical size binary code is one disadvantage of the flash method. Its chief advantage is that it provides a fast conversion time.

The resistive voltage-divider sets the reference voltage for each comparator. The output of each comparator is connected to an input of the priority encoder. A start-conversion pulse for each sampled level enables the encoder, and an encoder produces a 3-bit code representing the value of the sampled analog level.

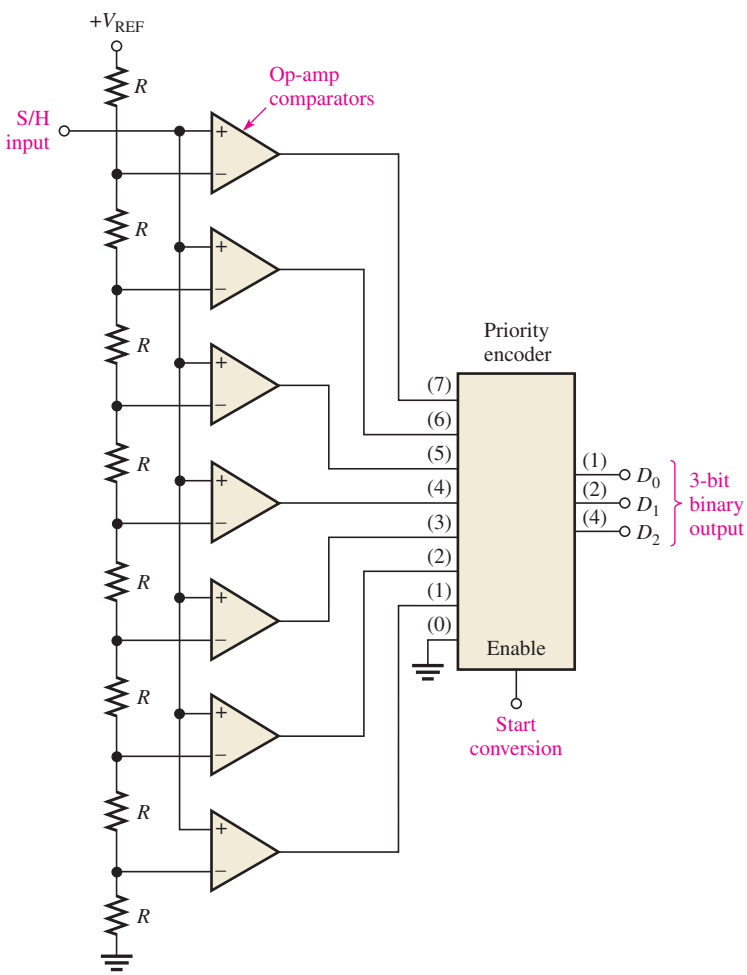

▲ FIGURE 36

A 3-bit flash ADC.

www.EngineeringBooksPdf.com

SECTION 5 CHECKUP

1. What is conversion time?
2. According to sampling theory, what is the theoretical minimum sampling rate for a 100 Hz sine wave?
3. Basically, how does a sample-and-hold circuit avoid quantization error in A/D conversion?

6 POWER-CONTROL CIRCUITS

A useful application of electronic circuits is to control power to a load. In this section, you will learn about two devices, the SCR and the triac. These devices are members of a class of devices known as thyristors, which are widely used in industrial controls for motors, heaters, phase controls, and many other applications. A thyristor can be thought of as an electronic switch that can rapidly turn on or off a large current to a load. Integrated circuits are frequently used to determine the time to turn on or off the SCR or triac.

After completing this section, you should be able to

- **Describe how power to a load is controlled**
  - Describe the SCR and triac
  - Explain how to turn an SCR on or off
  - Explain the term *zero-voltage switching*
  - Define *microcontroller*

The Silicon-Controlled Rectifier

A **thyristor** is a semiconductor switch composed of four or more layers of alternating *pnpn* material. There are various types of thyristors; the type principally depends on the number of layers and the particular connections to the layers. When a connection is made to the first, second, and fourth layer of a four-layer thyristor, a form of gated diode known as an **SCR** (silicon-controlled rectifier) is formed. This is one of the most important devices in the thyristor family because it acts like a diode that can be turned on when required. The basic structure and schematic symbol for an SCR are shown in Figure 37. For an SCR, the three connections are labeled the anode (A), cathode (K), and gate (G) as shown.

FIGURE 37

The silicon-controlled rectifier (SCR).

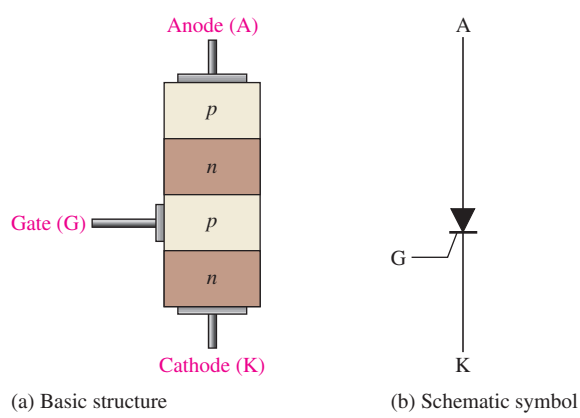

(a) Basic structure (b) Schematic symbol

www.EngineeringBooksPdf.com

The characteristic curve for an SCR is shown in Figure 38(a) for a gate current of zero. There are a total of four regions of the characteristic curve of interest. The reverse characteristic (plotted in quadrant 3) is the same as a normal diode with regions called the reverse-blocking region and the reverse-avalanche region. The reverse-blocking region is equivalent to an open switch. The reverse voltage that must be applied to an SCR to drive it into the avalanche region is typically several hundred volts or more. SCRs are normally not operated in the reverse-avalanche region.

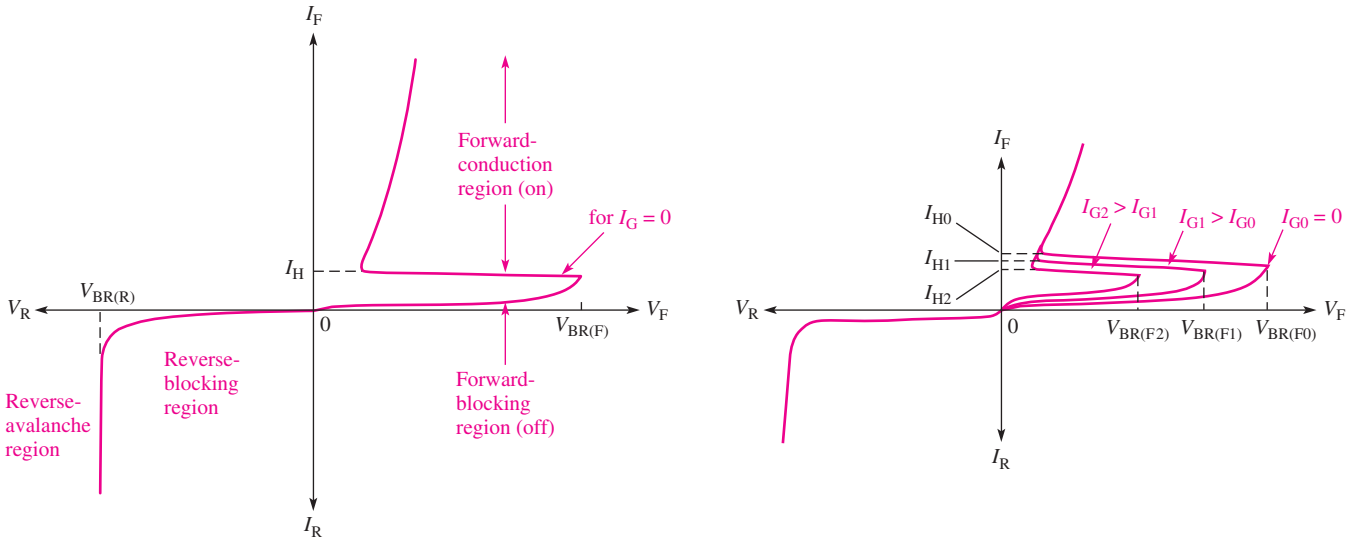

(a) When $I_G = 0$, $V_{BR(F)}$ must be exceeded to move into the conduction region.

(b) I_G controls the value of $V_{BR(F)}$ required for turn on.

▲ **FIGURE 38**

SCR characteristic curves.

The forward characteristic (plotted in quadrant 1) is divided into two regions. One is a forward-blocking region, where the SCR is basically off and the very high resistance between the anode and cathode can be approximated by an open switch. The second region is the forward-conduction region, where anode current occurs as in a normal diode. To move an SCR into this region, the forward-breakover voltage, $V_{BR(F)}$ must be exceeded. When an SCR is operated in the forward-conduction region, it approximates a closed switch between the anode and cathode. Notice the similarity to a normal diode characteristic except for the forward-blocking region.

Turning the SCR On There are two ways to move an SCR into the forward-conduction region. In both cases, the anode to cathode must be forward-biased; that is, the anode must be positive with respect to the cathode. The first method has already been mentioned and requires the application of forward voltage that exceeds the forward breakover voltage, $V_{BR(F)}$. Breakover voltage triggering is not normally used as a triggering method. The second method requires a positive pulse of current (trigger) on the gate. This pulse reduces the forward-breakover voltage, as shown in Figure 38(b) and the SCR conducts. The greater the gate current (I_G), the lower the value of $V_{BR(F)}$. This is the normal method for turning on an SCR.

Once the SCR is turned on, the gate loses control. In effect, the SCR is latched and will continue to approximate a closed switch as long as anode current is maintained. When the anode current drops below a value of current called the holding current (I_H), the SCR will drop out of conduction. The holding current is indicated in Figure 38.

Turning the SCR Off Two basic methods for turning off an SCR are anode current interruption and forced commutation. The anode current can be interrupted by opening the

www.EngineeringBooksPdf.com

path in the anode circuit, causing the anode current to drop to zero, turning off the SCR. One common "automatic" method to interrupt the anode current is to connect the SCR in an ac circuit. The negative cycle of the ac waveform will turn off the SCR.

The forced commutation method requires momentarily forcing current through the SCR in the direction opposite to the forward conduction so that forward current is reduced below the holding value. This can be implemented by various circuits. Probably the simplest is to electronically switch a charged capacitor across the SCR in the reverse direction.

The Triac

The **triac** is a thyristor with the ability to pass current bidirectionally and is therefore an ac power-control device. Although it is one device, its performance is equivalent to two SCRs connected in parallel in opposite directions but with a common gate terminal. The basic characteristic curves for a triac are illustrated in Figure 39. Because a triac is like two back-to-back SCRs, there is no reverse characteristic.

▶ **FIGURE 39**

Triac characteristic curves.

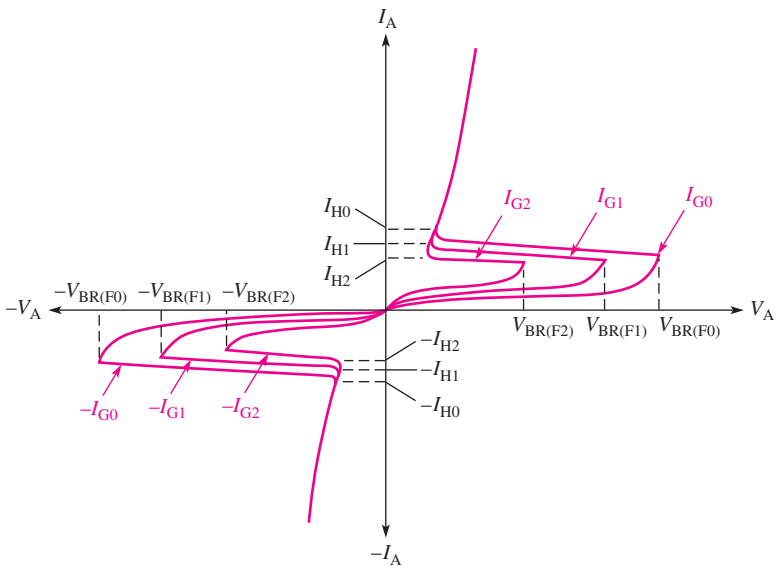

As in the case of the SCR, gate triggering is the usual method for turning on a triac. Application of current to the triac gate initiates the latching mechanism discussed in the previous section. Once conduction has been initiated, the triac will conduct on with either polarity; hence, it is useful as an ac controller. A triac can be triggered such that ac power is supplied to the load for a portion of the ac cycle. This enables the triac to provide more or less power to the load, depending on the trigger point. This basic operation is illustrated with the circuit in Figure 40.

▶ **FIGURE 40**

Basic triac phase control. The timing of the gate trigger determines the portion of the ac cycle passed to the load.

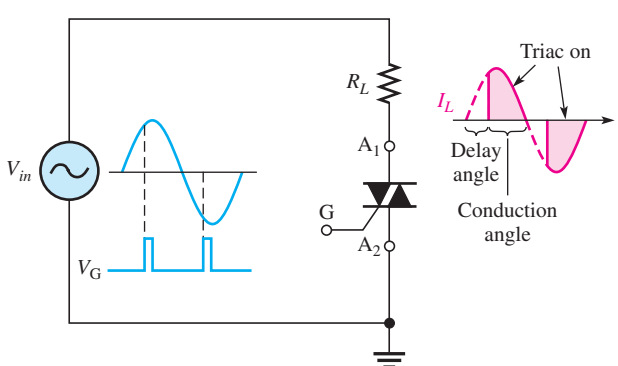

www.EngineeringBooksPdf.com

The Zero-Voltage Switch

One problem that arises with triggering an SCR or triac when it is switched on during the ac cycle is generation of **RFI** (radio frequency interference) due to switching transients. If the SCR or triac is suddenly switched on near the peak of the ac cycle, for example, there would be a sudden inrush of current to the load. When there is a sudden transition of voltage or current, many high-frequency components are generated. These high-frequency components can radiate into sensitive electronic circuits, creating serious disturbances, even catastrophic failures. By switching the SCR or triac on when the voltage across it is zero, the sudden increase in current is prevented because the current will increase sinusoidally with the ac voltage. **Zero-voltage switching** also prevents thermal shock to the load which, depending on the type of load, may shorten its life.

Not all applications can use zero-voltage switching, but when it is possible, noise problems are greatly reduced. For example, the load might be a resistive heating element, and the power is typically turned on for several cycles of the ac and then turned off for several cycles to maintain a certain temperature. The zero-voltage switch uses a sensing circuit to determine when to turn power on. The idea of zero-voltage switching is illustrated in Figure 41.

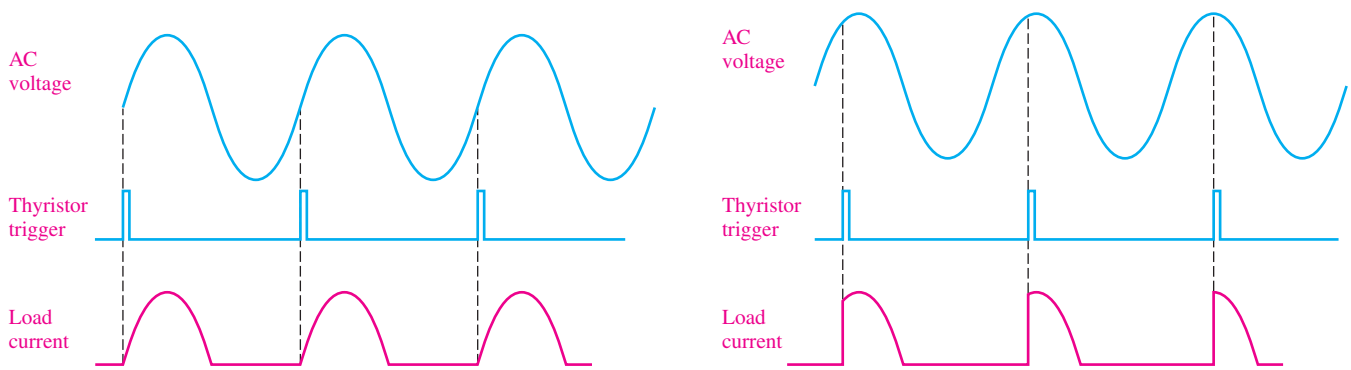

(a) Zero-voltage switching of load current

(b) Nonzero switching of load current produces current transients that cause RFI.

▲ **FIGURE 41**

Comparison of zero-voltage switching to nonzero switching of power to a load.

A basic circuit that can provide a trigger pulse as the ac waveform crosses the zero axis in the positive direction is shown in Figure 42. Resistor R_1 and diodes D_1 and D_2 protect the input of the comparator from excessive voltage swings. The output voltage level of the comparator is a square wave. C_1 and R_2 form a differentiating circuit to convert the square wave output to trigger pulses. Diode D_3 limits the output to positive triggers only.

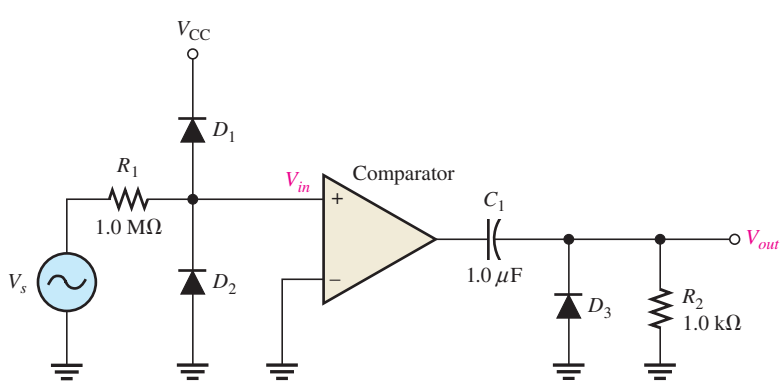

◀ **FIGURE 42**

A circuit that can provide triggers when the ac waveform crosses the zero axis in the positive direction.

www.EngineeringBooksPdf.com

Microcontrollers

SCRs and triacs are often used in systems that have many additional requirements. For instance, a system as basic as a washing machine requires timing functions, speed or torque regulation, motor protection, sequence generation, display control and so on. Systems like this can be controlled by a special class of computers called **microcontrollers**. A microcontroller is constructed as a single integrated circuit with all of the basic features found in a microprocessor with special input/output (I/O) circuits, ADCs (analog-to-digital converters), counters, timers, oscillators, memory, and other features. Microcontrollers can be configured for a specific system and offer an inexpensive alternative to older methods for providing a trigger to an SCR or triac.

SECTION 6 CHECKUP

1. How does an SCR differ from a triac in terms of delivering power to a load?
2. Explain the basic purpose in zero-voltage switching.

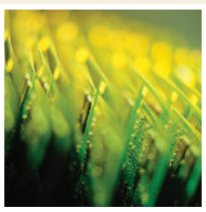

Application Assignment

PUTTING YOUR KNOWLEDGE TO WORK

In this application assignment, a temperature-sensing motor-control circuit is used to control motor speed for the purpose of cooling the electronics circuits contained in an enclosed box. When the temperature in the box reaches a certain threshold level, the circuit turns on a fan motor and adjusts its speed in proportion to the temperature inside the box. As the temperature tries to increase, the speed of the fan motor also increases to provide more air flow for cooling. As the temperature decreases, so does the speed of the fan motor.

Basic Operation of the Circuit

The temperature-sensing and motor-control circuit is shown in Figure 43. The circuit contains an LM335Z temperature sensor that acts as a zener diode with a nominal voltage that varies linearly with temperature. Transistor Q_1 acts as an inverting amplifier to provide a voltage that decreases with increasing temperature to the inverting input of the 741 op-amp, which is set up as a comparator. The potentiometer, R_2, provides a portion of the transformer secondary voltage for the noninverting comparator input. The output of the comparator is connected to transistor

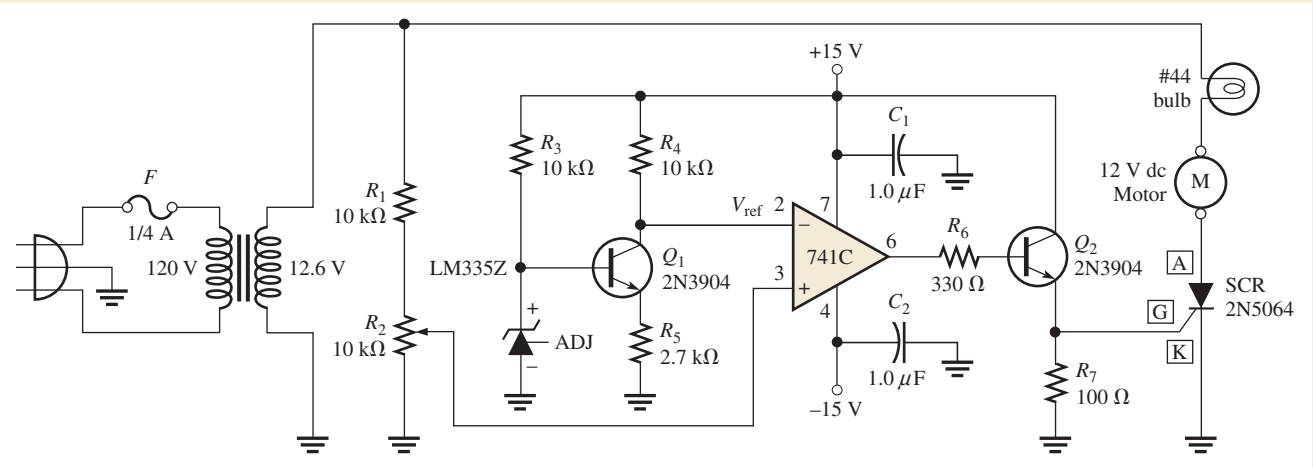

▲ **FIGURE 43**

Temperature-sensing and motor-control circuit.

www.EngineeringBooksPdf.com

Q_2, which acts as a buffer amplifier for driving the trigger input of the SCR. When the SCR triggers on, the motor is on.

Potentiometer R_2 is adjusted so that at room temperature the comparator output is LOW and the motor is off. As the temperature increases, the LM335Z voltage increases and the Q_2 collector voltage (comparator threshold voltage) decreases. When the ac voltage from the potentiometer exceeds the comparator threshold voltage, the comparator switches to its high state causing the SCR to trigger into conduction, thus turning on the motor. When the ac voltage decreases, the SCR current drops below its holding value and the SCR turns off. On the next cycle of the ac voltage, the threshold is once again exceeded and the SCR is triggered. As the SCR goes on and off, effectively a pulsed dc is provided to the motor.

As the temperature increases, the comparator threshold voltage (Q_2 collector) decreases, causing the SCR to trigger on earlier in the ac cycle. This increases the motor speed because the duty cycle of the pulsed dc has increased. As the temperature decreases, the comparator threshold voltage increases, causing the SCR to trigger later in the ac cycle. This decreases the motor speed because the duty cycle of the pulsed dc has decreased. The lamp in series with the motor provides a visual indication of the fan motor speed. When the motor runs faster, the lamp is brighter.

Step 1: Checking the Circuit Board

1. Make sure that the circuit board shown in Figure 44 is correctly assembled by checking it against the schematic in Figure 43. Backside connections are shown as darker traces. The motor and the lamp are external to the board.
2. Label a copy of the board with component and input/output designations.

Step 2: Analyzing the Circuit

1. If the LM335Z voltage is 2.93 V at 20°C, determine the voltage at the inverting input of the comparator.
2. The LM335Z has a breakdown voltage proportional to the absolute temperature (K) of +10 mV/K. Determine the voltage from the LM335Z at +50°C. Add 273 to °C to get absolute temperature.

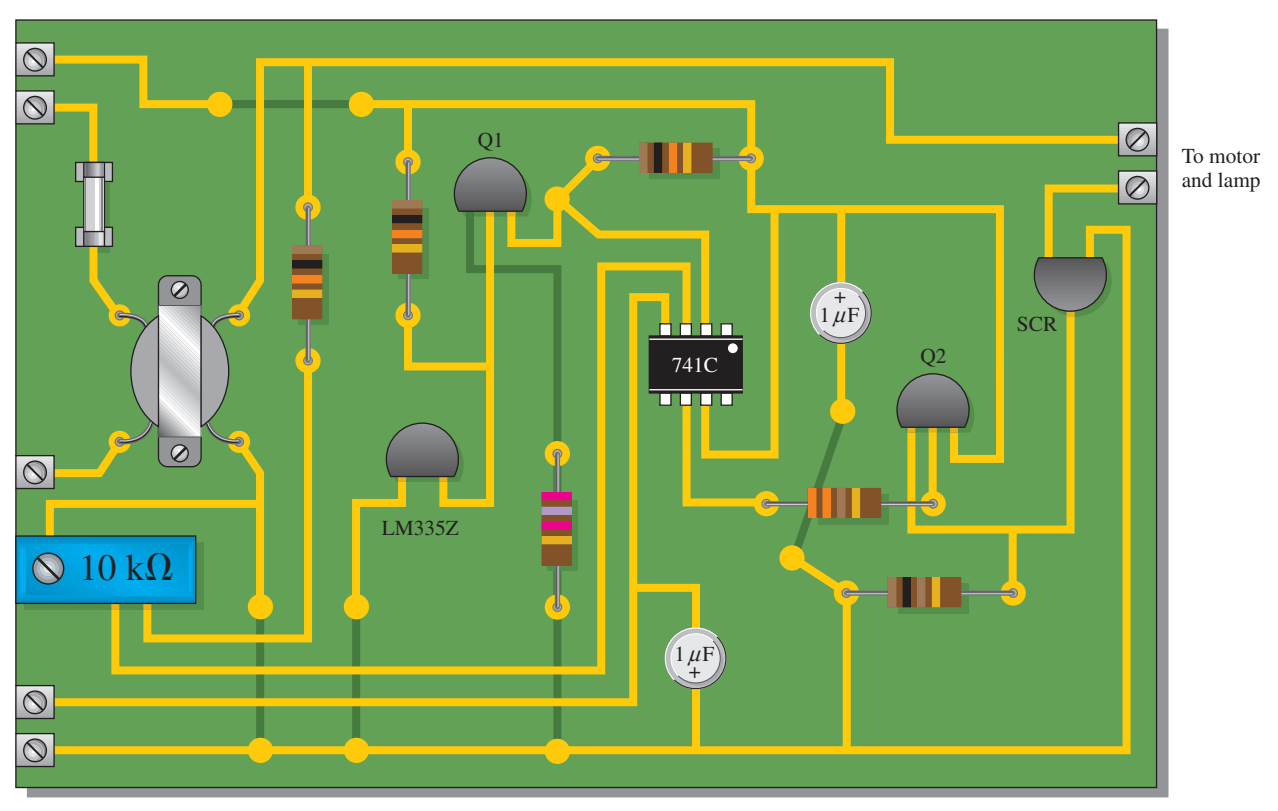

▲ FIGURE 44

Printed circuit board.

www.EngineeringBooksPdf.com

3. Assume the output of the transformer is 12.6 V rms. To what peak voltage can the noninverting comparator input be adjusted at room temperature (20°C) so that the motor does not run?

Step 3: Testing the Circuit Board

1. Develop a step-by-step procedure to check the circuit board for proper operation.
2. Specify ac and dc voltage values for all the measurements to be made.

Step 4: Troubleshooting the Circuits

For each of the following symptoms, determine the possible fault or faults.

1. The collector of Q_1 stays at +15 V.
2. There is no pulsating dc voltage to the motor with verified pulses at the op-amp output.
3. The fan motor runs continuously at a constant speed regardless of the temperature.
4. The fan motor will not run although the light is on.

Review

1. Explain why the motor runs faster as the temperature increases.
2. What prevents the motor from running at or below room temperature?
3. When does the SCR turn on? When does it turn off?

SUMMARY

- A thermocouple is a type of temperature transducer formed by the junction of two dissimilar metals.
- When the thermocouple junction is heated, a voltage is generated across the junction that is proportional to the temperature.
- Thermocouples can be used to measure very high temperatures.
- The resistance temperature detector (RTD) is a temperature transducer in which the resistance changes directly with temperature. It has a positive temperature coefficient.
- RTDs are typically used in bridge circuits or in constant-current circuits to measure temperature.
- The thermistor is a temperature transducer in which the resistance usually changes inversely with the temperature.
- Thermistors are more sensitive than RTDs or thermocouples, but their temperature range is more limited.
- The strain gauge is based on the fact that the resistance of a material increases when its length increases and its diameter decreases.
- The gauge factor of a strain gauge is the fractional change in resistance to the fractional change in length.
- Many pressure transducers are constructed with strain gauges bonded to a flexible diaphragm.
- An absolute pressure transducer measures pressure relative to a vacuum.
- A gauge pressure transducer measures pressure relative to ambient pressure.
- A differential pressure transducer measures one pressure relative to another pressure.
- The flow rate of a liquid can be measured using a differential pressure gauge.
- Motion-measuring circuits include LVDT displacement transducers, velocity transducers, and accelerometers.
- A sample-and-hold circuit produces an essentially constant output voltage equal to the instantaneous value of an input signal at a given point in time.
- The output of a sample-and-hold circuit goes to an analog-to-digital converter (ADC).
- The sample-and-hold process minimizes quantization error.
- An analog-to-digital converter (ADC) in conjunction with a sample-and-hold circuit converts an analog signal into a series of digital codes.
- Greater than two samples per cycle of the input signal is necessary to represent an analog waveform. The theoretical minimum sampling rate limit is two samples per cycle and is known as the Nyquist rate.
- The higher the sample rate, the more accurately an analog signal can be represented.

www.EngineeringBooksPdf.com

- One type of ADC is the flash or simultaneous converter. Another type is the successive approximation.
- The thyristor is a category of electronic switches.
- The SCR (silicon-controlled rectifier) and triac are two types of thyristors used in power control.
- A zero-voltage switch generates pulses at the zero crossings of an ac voltage for triggering a thyristor.

KEY TERMS

ADC Analog-to-digital converter; a device used to convert an analog signal to a sequence of digital codes.

Cold junction A reference thermocouple held at a fixed temperature and used for compensation in a thermocouple circuit.

Conversion time The time it takes for an ADC to convert an analog voltage sample to a digital code.

Flash A method of analog-to-digital conversion.

Quantization The determination of a value for a changing analog voltage.

Resolution The number of bits involved in an analog-to-digital conversion.

RTD Resistance temperature detector.

Sample-and-hold The process of taking the instantaneous value of a quantity at a specific point in time and storing it on a capacitor.

SCR Silicon controlled rectifier; a type of three-terminal thyristor.

Strain gauge A transducer formed by a resistive material in which a lengthening or shortening due to stress produces a proportional change in resistance.

Thermistor A type of temperature transducer in which resistance depends on temperature.

Thermocouple A type of temperature transducer formed by the junction of two dissimilar metals that produces a voltage proportional to temperature.

Thyristor A class of four-layer (*pnpn*) semiconductor switching devices.

Transducer A device that converts a physical parameter into an electrical quantity.

Triac A 3-terminal thyristor that can conduct current in either direction.

FORMULAS

1 $$R = \frac{\rho L}{A}$$ Resistance of a wire

2 $$GF = \frac{\Delta R/R}{\Delta L/L}$$ Gauge factor of a strain gauge

TRUE/FALSE QUIZ

Answers are at the end of the chapter.

1. A thermocouple can measure higher temperatures than a thermistor.
2. Thermocouples are commonly used to measure body temperature in medical applications.
3. An advantage of an RTD over a thermistor is that it is linear.
4. The resistance of a strain gauge decreases by a very small amount when it is stretched.
5. A thermocouple signal conditioner must have high bandwidth to be useful.
6. Signal conditioning for temperature sensors typically includes an isolation amplifier.
7. A three-wire bridge can compensate for the wire resistance of a temperature sensor.
8. Absolute pressure is measured relative to the atmosphere.
9. In a sample-and-hold circuit, an analog value is stored on a capacitor.
10. An SCR is used only in DC circuits.

www.EngineeringBooksPdf.com

SELF-TEST

1. A thermocouple

(a) produces a change in resistance for a change in temperature
(b) produces a change in voltage for a change in temperature
(c) is made of two dissimilar metals
(d) answers (b) and (c)

2. In a thermocouple circuit, where each of the thermocouple wires is connected to a copper circuit board terminal,

(a) an unwanted thermocouple is produced **(b)** compensation is required
(c) a reference thermocouple must be used **(d)** answers (a), (b), and (c)
(e) answers (a) and (c)

3. A thermocouple signal conditioner is designed to provide

(a) gain **(b)** compensation **(c)** isolation
(d) common-mode rejection **(e)** all of the answers

4. An RTD

(a) produces a change in resistance for a change in temperature
(b) has a negative temperature coefficient
(c) has a wider temperature range than a thermocouple
(d) all of these

5. The purpose of a 3-wire bridge is to eliminate

(a) nonlinearity of an RTD **(b)** the effects of wire resistance in an RTD circuit
(c) noise from the RTD resistance **(d)** none of these

6. A thermistor

(a) is less sensitive than an RTD
(b) can measure a greater temperature range than a thermocouple
(c) can be used in a constant-current configuration or a Wheatstone bridge
(d) all of the above

7. Both RTDs and thermistors are used in

(a) circuits that measure resistance **(b)** circuits that measure temperature
(c) bridge circuits **(d)** constant-current-driven circuits
(e) answers (b), (c), and (d) **(f)** answers (b) and (c) only

8. When the length of a strain gauge increases,

(a) it produces more voltage **(b)** its resistance increases
(c) its resistance decreases **(d)** it produces an open circuit

9. A higher gauge factor indicates that the strain gauge is

(a) less sensitive to a change in length **(b)** more sensitive to a change in length
(c) has more total resistance **(d)** made of a physically larger conductor

10. Many types of pressure transducers are made with

(a) thermistors **(b)** RTDs
(c) strain gauges **(d)** none of these

11. Gauge pressure is measured relative to

(a) ambient pressure **(b)** a vacuum **(c)** a reference pressure

12. The flow rate of a liquid can be measured

(a) with a string **(b)** with a temperature sensor
(c) with an absolute pressure transducer **(d)** with a differential pressure transducer

www.EngineeringBooksPdf.com

13. A basic sample-and-hold circuit contains
- **(a)** an analog switch and an amplifier
- **(b)** an analog switch, a capacitor, and an amplifier
- **(c)** an analog multiplexer and a capacitor
- **(d)** an analog switch, a capacitor, and input and output amplifiers

14. In a sample/track-and-hold circuit,
- **(a)** the voltage at the end of the sample interval is held
- **(b)** the voltage at the beginning of the sample interval is held
- **(c)** the average voltage during the sample interval is held
- **(d)** the output follows the input during the sample interval
- **(e)** answers (a) and (d)

15. In an analog switch, the aperture time is the time it takes for the switch to
- **(a)** fully open after the control switches from hold to sample
- **(b)** fully close after the control switches from sample to hold
- **(c)** fully open after the control switches from sample to hold
- **(d)** fully close after the control switches from hold to sample

16. An 8-bit analog-to-digital converter (ADC) can represent
- **(a)** 144 discrete values of an analog input
- **(b)** 4096 discrete values of an analog input
- **(c)** a continuous set of values of an analog input
- **(d)** 256 discrete values of an analog input

17. An analog signal must be sampled at a minimum rate greater than
- **(a)** twice the maximum frequency
- **(b)** twice the minimum frequency
- **(c)** the maximum frequency
- **(d)** the minimum frequency

18. Quantization error in an ADC is due to
- **(a)** poor resolution
- **(b)** nonlinearity of the input
- **(c)** a missing bit in the output
- **(d)** a change in the input voltage during the conversion time

19. Quantization error can be avoided by
- **(a)** using a higher resolution ADC
- **(b)** using a sample-and-hold prior to the ADC
- **(c)** shortening the conversion time
- **(d)** using a flash ADC

20. Zero-voltage switching is commonly used in
- **(a)** determining thermocouple voltage
- **(b)** SCR and triac power-control circuits
- **(c)** balanced bridge circuits
- **(d)** RFI generation

21. A major disadvantage of nonzero switching of power to a load is
- **(a)** lack of efficiency
- **(b)** possible damage to the thyristor
- **(c)** RF noise generation

PROBLEMS

Answers to odd-numbered problems are at the end of the chapter.

SECTION 1 Temperature Measurement

1. Three identical thermocouples are each exposed to a different temperature as follows. Thermocouple *A* is exposed to 450°C, thermocouple *B* is exposed to 420°C, and thermocouple *C* is exposed to 1200°C. Which thermocouple produces the most voltage?

2. You have two thermocouples. One is a *K* type and the other is a *T* type. In general, what do these letter designations tell you?

www.EngineeringBooksPdf.com

▶ FIGURE 45

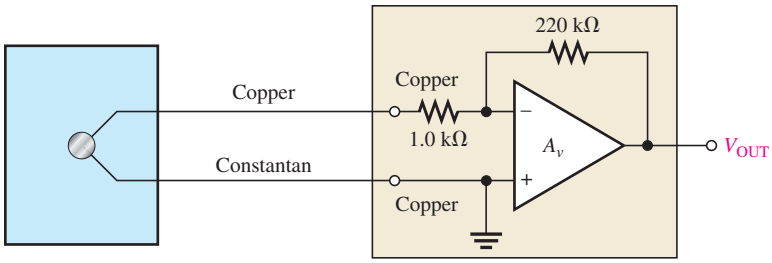

3. Determine the output voltage of the op-amp in Figure 45 if the thermocouple is measuring a temperature of 400°C and the circuit itself is at 25°C. Refer to Table 1.
4. What should be the output voltage in Problem 3 if the circuit is properly compensated?
5. At what resistance value of the RTD will the bridge circuit in Figure 46 be balanced if the wires running to the RTD each have a resistance of 10 Ω?

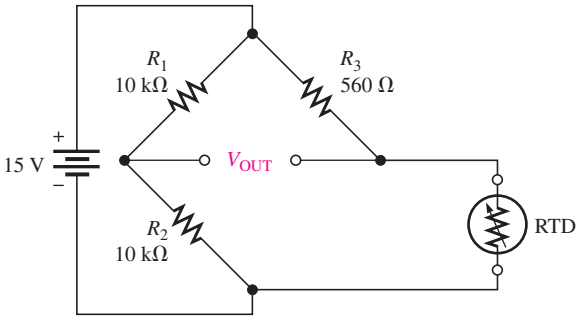

▲ FIGURE 46

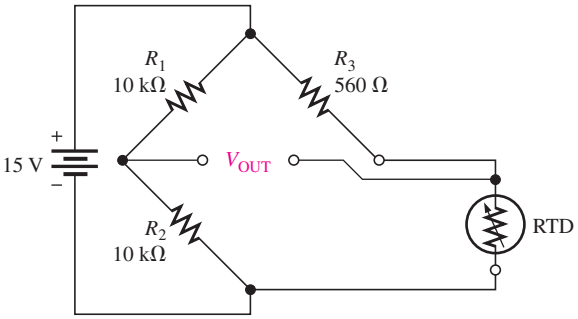

▲ FIGURE 47

6. At what resistance value of the RTD will the bridge circuit in Figure 47 be balanced if the wires running to the RTD each have a resistance of 10 Ω?
7. Explain the difference in the results of Problems 5 and 6.
8. Determine the output voltage of the instrumentation amplifier in Figure 48 if the resistance of the RTD is 697 Ω at the temperature being measured.

▶ FIGURE 48

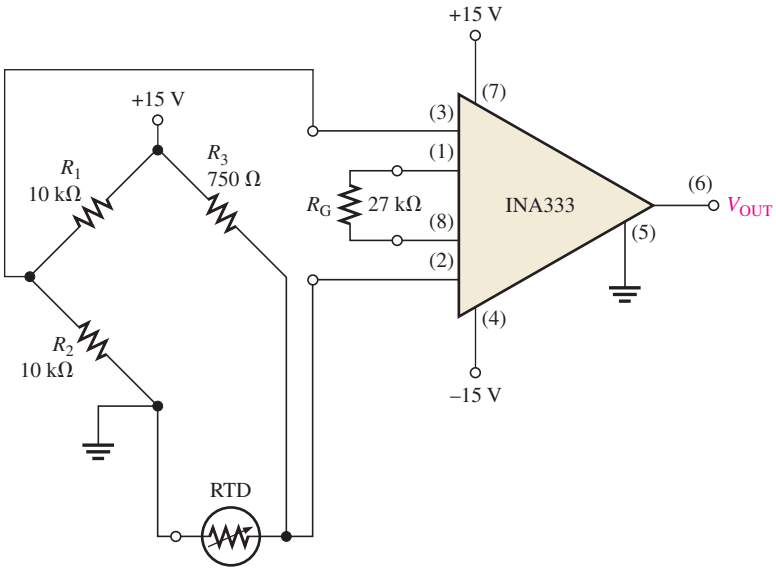

www.EngineeringBooksPdf.com

SECTION 2 Strain, Pressure, and Flow Rate Measurements

9. A certain material being measured undergoes a strain of 3 parts per million. The strain gauge has a nominal resistance of 600 Ω and a gauge factor of 2.5. Determine the resistance change in the strain gauge.

10. Explain how a strain gauge can be used to measure pressure.

11. Identify and compare the three symbols in Figure 49.

▶ FIGURE 49

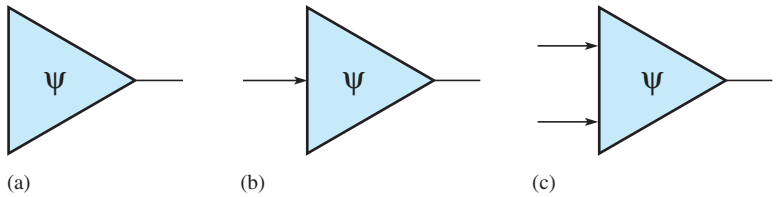

SECTION 4 Sample-and-Hold Circuits

12. Determine the output voltage waveform for the sample-and-hold circuit in Figure 50 given the analog input and the control voltage waveforms shown. Sample is the high control level. The tracking interval should be included.

▶ FIGURE 50

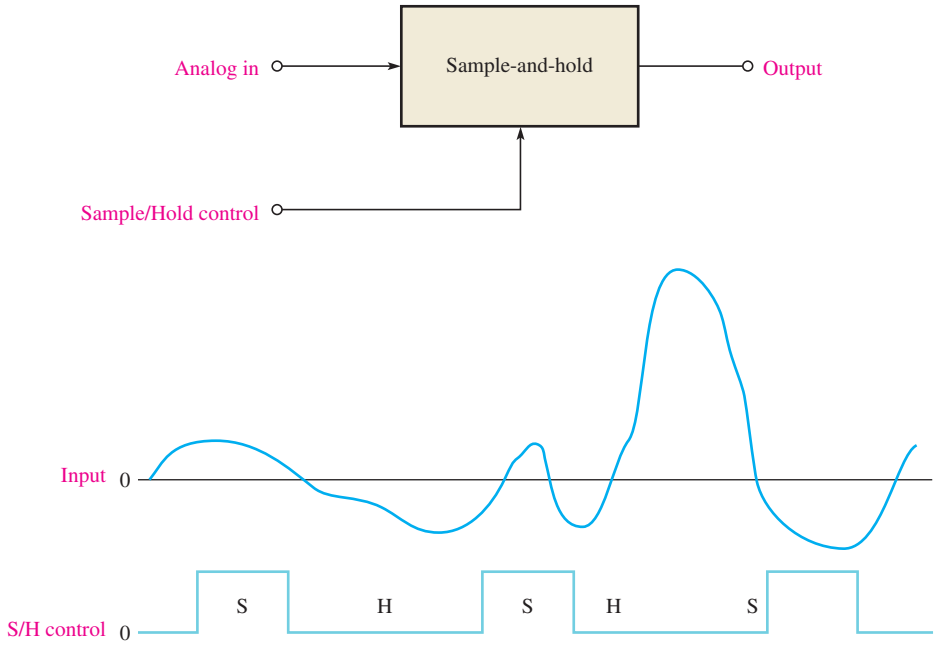

13. Repeat Problem 12 for the waveforms in Figure 51.

▶ FIGURE 51

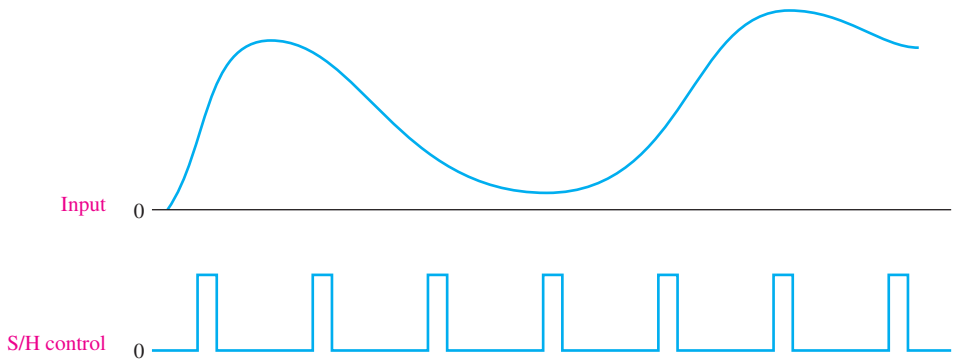

www.EngineeringBooksPdf.com

SECTION 6 Power-Control Circuits

14. Name two ways an SCR can be placed in the forward-conduction region.

15. Sketch the V_R waveform for the circuit in Figure 52, given the indicated relationship of the input waveforms.

▶ FIGURE 52

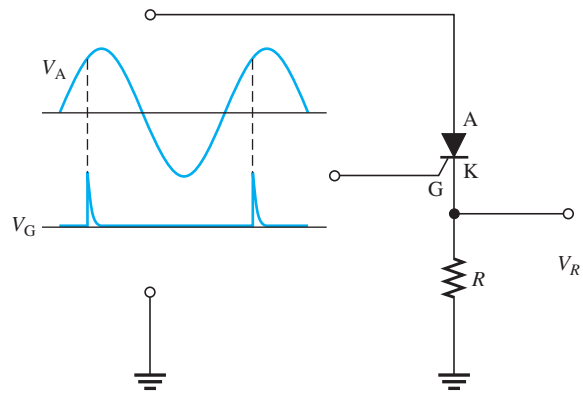

16. For the circuit in Figure 53, describe the waveform at the output of the comparator and at the output of the circuit in relation to the input. Assume the input is a 120 V rms sine wave and the comparator and the power supply voltages for the comparator are ± 10 V.

17. What change to the circuit in Figure 53 would you make if you wanted to have positive triggers on the negative slope of the input waveform?

▶ FIGURE 53

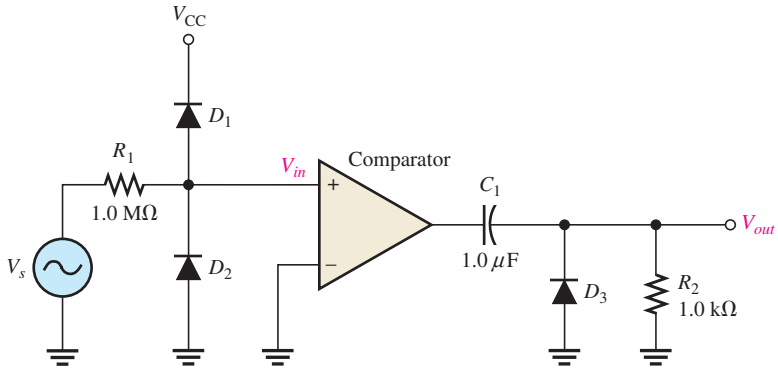

ANSWERS

SECTION CHECKUPS

SECTION 1 Temperature Measurement

1. A thermocouple is a temperature transducer formed by the junction of two dissimilar metals.
2. A voltage proportional to the temperature is produced across the junction of two dissimilar metals.
3. An RTD is a resistance temperature detector in which the resistance is proportional to the temperature, whereas the thermocouple produces a voltage.
4. An RTD has a positive temperature coefficient and a thermistor has a negative temperature coefficient.
5. The thermocouple has a greater temperature range than the RTD or thermistor.

www.EngineeringBooksPdf.com

SECTION 2 Strain, Pressure, and Flow Rate Measurements

1. Basically, a strain gauge is a resistive element whose dimensions can be altered by an applied force to produce a change in resistance.
2. Basically, a pressure gauge is a strain gauge bonded to a flexible diaphragm.
3. Absolute, gauge, and differential

SECTION 3 Motion Measurement

1. LVDT—Linear variable differential transformer
2. Displacement
3. Tachometer

SECTION 4 Sample-and-Hold Circuits

1. A sample-and-hold retains the value of an analog signal taken at a given point.
2. Droop is the decrease in the held voltage due to capacitor leakage.
3. Aperture time is the time required for an analog switch to fully open at the end of a sample pulse.
4. Acquisition time is the time required for the device to reach final value at the start of the sample pulse.

SECTION 5 Analog-to-Digital Conversion

1. The time for a sampled analog value to be converted to digital is the conversion time.
2. 200 Hz
3. The sample-and-hold keeps the sampled value constant during conversion.

SECTION 6 Power-Control Circuits

1. An SCR is unidirectional and therefore allows current through the load only during half of the ac cycle. A triac is bidirectional and allows current during the complete cycle.
2. Zero-voltage switching eliminates fast transitions in the current to a load, thus reducing RFI emissions and thermal shock to the load element.

RELATED PROBLEMS FOR EXAMPLES

1 6.01%

2 24.25 mV

3 1.0 kΩ; 0 V

4 5.12 mΩ

5 See Figure 54.

▶ FIGURE 54

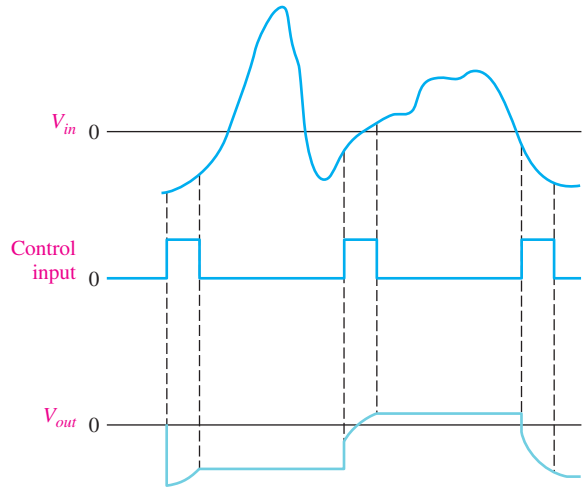

www.EngineeringBooksPdf.com

TRUE/FALSE QUIZ

1. T	**2.** F	**3.** T	**4.** F	**5.** F
6. T	**7.** T	**8.** F	**9.** T	**10.** F

SELF-TEST

1. (d)	**2.** (d)	**3.** (e)	**4.** (a)	**5.** (b)	**6.** (c)	**7.** (e)
8. (b)	**9.** (b)	**10.** (c)	**11.** (a)	**12.** (d)	**13.** (d)	**14.** (e)
15. (c)	**16.** (d)	**17.** (a)	**18.** (d)	**19.** (b)	**20.** (b)	**21.** (c)

PROBLEMS – ODD-NUMBERED ANSWERS

1. Thermocouple *C*

3. −4.36 V

5. 540 Ω

7. The effects of the wire resistances are cancelled in the 3-wire bridge.

9. $\Delta R = 4.5\ \text{m}\Omega$

11. **(a)** absolute pressure transducer

(b) gauge pressure transducer

(c) differential pressure transducer

13. See Figure P–37.

▶ FIGURE P–37

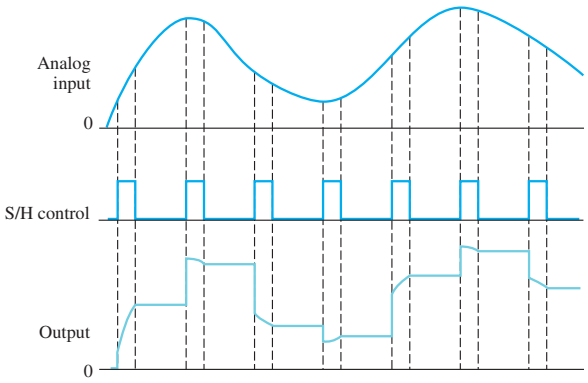

15. See Figure P–38.

▶ FIGURE P–38

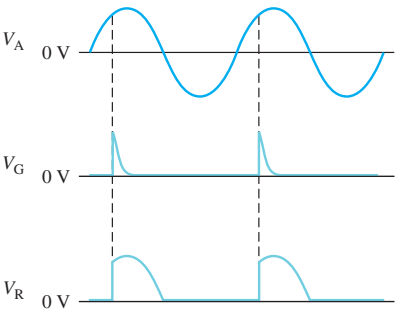

17. Reverse the comparator inputs.

PHOTO CREDITS FOR REOCCURRING IMAGES

CD Icon: Stockbyte/Getty Images; **Computer Chips:** Photodisc/Thinkstock; **Computer:** Jeff Maloney/Photodisc/Getty Images; **Fiber Optic:** discpicture/Shutterstock.

www.EngineeringBooksPdf.com

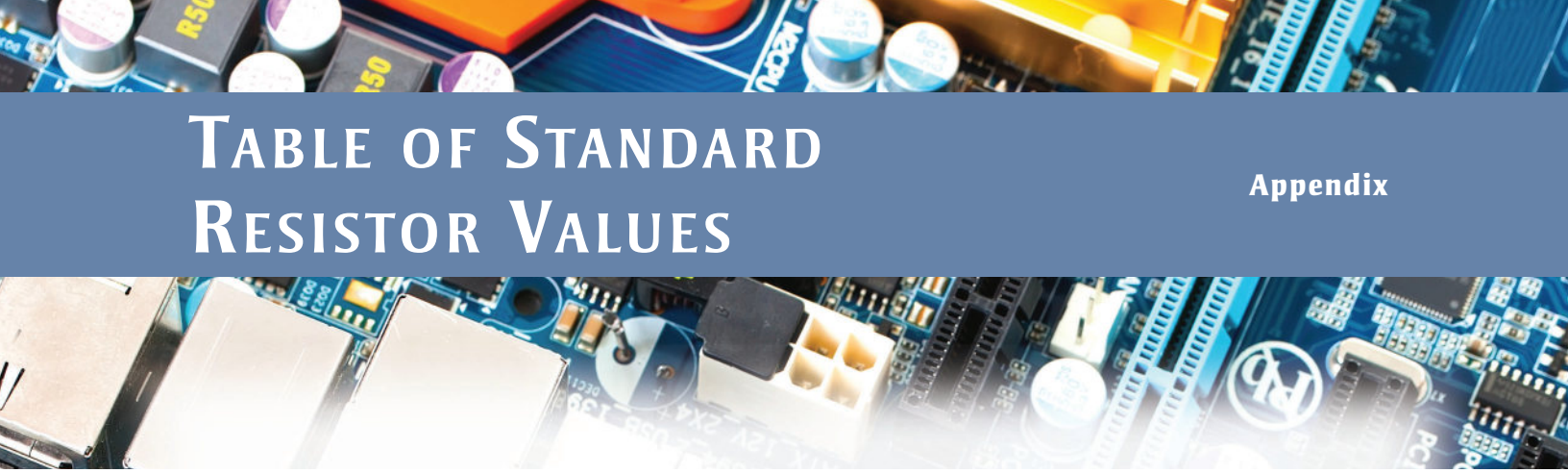

Table of Standard Resistor Values

Appendix

Streeter Photography/Alamy

Resistance Tolerance (±%)

0.1% 0.25% 0.5%	1%	2% 5%	10%	0.1% 0.25% 0.5%	1%	2% 5%	10%	0.1% 0.25% 0.5%	1%	2% 5%	10%	0.1% 0.25% 0.5%	1%	2% 5%	10%	0.1% 0.25% 0.5%	1%	2% 5%	10%	0.1% 0.25% 0.5%	1%	2% 5%	10%
10.0	10.0	10	10	14.7	14.7	—	—	21.5	21.5	—	—	31.6	31.6	—	—	46.4	46.4	—	—	68.1	68.1	68	68
10.1	—	—	—	14.9	—	—	—	21.8	—	—	—	32.0	—	—	—	47.0	—	47	47	69.0	—	—	—
10.2	10.2	—	—	15.0	15.0	15	15	22.1	22.1	22	22	32.4	32.4	—	—	47.5	47.5	—	—	69.8	69.8	—	—
10.4	—	—	—	15.2	—	—	—	22.3	—	—	—	32.8	—	—	—	48.1	—	—	—	70.6	—	—	—
10.5	10.5	—	—	15.4	15.4	—	—	22.6	22.6	—	—	33.2	33.2	33	33	48.7	48.7	—	—	71.5	71.5	—	—
10.6	—	—	—	15.6	—	—	—	22.9	—	—	—	33.6	—	—	—	49.3	—	—	—	72.3	—	—	—
10.7	10.7	—	—	15.8	15.8	—	—	23.2	23.2	—	—	34.0	34.0	—	—	49.9	49.9	—	—	73.2	73.2	—	—
10.9	—	—	—	16.0	—	16	—	23.4	—	—	—	34.4	—	—	—	50.5	—	—	—	74.1	—	—	—
11.0	11.0	11	—	16.2	16.2	—	—	23.7	23.7	—	—	34.8	34.8	—	—	51.1	51.1	51	—	75.0	75.0	75	—
11.1	—	—	—	16.4	—	—	—	24.0	—	24	—	35.2	—	—	—	51.7	—	—	—	75.9	—	—	—
11.3	11.3	—	—	16.5	16.5	—	—	24.3	24.3	—	—	35.7	35.7	—	—	52.3	52.3	—	—	76.8	76.8	—	—
11.4	—	—	—	16.7	—	—	—	24.6	—	—	—	36.1	—	36	—	53.0	—	—	—	77.7	—	—	—
11.5	11.5	—	—	16.9	16.9	—	—	24.9	24.9	—	—	36.5	36.5	—	—	53.6	53.6	—	—	78.7	78.7	—	—
11.7	—	—	—	17.2	—	—	—	25.2	—	—	—	37.0	—	—	—	54.2	—	—	—	79.6	—	—	—
11.8	11.8	—	—	17.4	17.4	—	—	25.5	25.5	—	—	37.4	37.4	—	—	54.9	54.9	—	—	80.6	80.6	—	—
12.0	—	12	12	17.6	—	—	—	25.8	—	—	—	37.9	—	—	—	56.2	—	—	—	81.6	—	—	—
12.1	12.1	—	—	17.8	17.8	—	—	26.1	26.1	—	—	38.3	38.3	—	—	56.6	56.6	56	56	82.5	82.5	82	82
12.3	—	—	—	18.0	—	18	18	26.4	—	—	—	38.8	—	—	—	56.9	—	—	—	83.5	—	—	—
12.4	12.4	—	—	18.2	18.2	—	—	26.7	26.7	—	—	39.2	39.2	39	39	57.6	57.6	—	—	84.5	84.5	—	—
12.6	—	—	—	18.4	—	—	—	27.1	—	27	27	39.7	—	—	—	58.3	—	—	—	85.6	—	—	—
12.7	12.7	—	—	18.7	18.7	—	—	27.4	27.4	—	—	40.2	40.2	—	—	59.0	59.0	—	—	86.6	86.6	—	—
12.9	—	—	—	18.9	—	—	—	27.7	—	—	—	40.7	—	—	—	59.7	—	—	—	87.6	—	—	—
13.0	13.0	13	—	19.1	19.1	—	—	28.0	28.0	—	—	41.2	41.2	—	—	60.4	60.4	—	—	88.7	88.7	—	—
13.2	—	—	—	19.3	—	—	—	28.4	—	—	—	41.7	—	—	—	61.2	—	—	—	89.8	—	—	—
13.3	13.3	—	—	19.6	19.6	—	—	28.7	28.7	—	—	42.2	42.2	—	—	61.9	61.9	62	—	90.9	90.9	91	—
13.5	—	—	—	19.8	—	—	—	29.1	—	—	—	42.7	—	—	—	62.6	—	—	—	92.0	—	—	—
13.7	13.7	—	—	20.0	20.0	20	—	29.4	29.4	—	—	43.2	43.2	43	—	63.4	63.4	—	—	93.1	93.1	—	—
13.8	—	—	—	20.3	—	—	—	29.8	—	—	—	43.7	—	—	—	64.2	—	—	—	94.2	—	—	—
14.0	14.0	—	—	20.5	20.5	—	—	30.1	30.1	30	—	44.2	44.2	—	—	64.9	64.9	—	—	95.3	95.3	—	—
14.2	—	—	—	20.8	—	—	—	30.5	—	—	—	44.8	—	—	—	65.7	—	—	—	96.5	—	—	—
14.3	14.3	—	—	21.0	21.0	—	—	30.9	30.9	—	—	45.3	45.3	—	—	66.5	66.5	—	—	97.6	97.6	—	—
14.5	—	—	—	21.3	—	—	—	31.2	—	—	—	45.9	—	—	—	67.3	—	—	—	98.8	—	—	—

NOTE: These values are generally available in multiples of 0.1, 1, 10, 100, 1 k, and 1 M.

From Appendix A of *Electronics Fundamentals: Circuits, Devices, and Applications*, Eighth Edition, Thomas L. Floyd, David M, Buchla.
Copyright © 2010 by Pearson Education, Inc. Published by Pearson Prentice Hall. All rights reserved.

www.EngineeringBooksPdf.com

This page intentionally left blank

www.EngineeringBooksPdf.com

Capacitor Color Coding and Marking

From Appendix B of *Electronics Fundamentals: Circuits, Devices, and Applications*, Eighth Edition, Thomas L. Floyd, David M. Buchla.
Copyright © 2010 by Pearson Education, Inc. Published by Pearson Prentice Hall. All rights reserved.

www.EngineeringBooksPdf.com

Appendix

Capacitor Color Coding and Marking

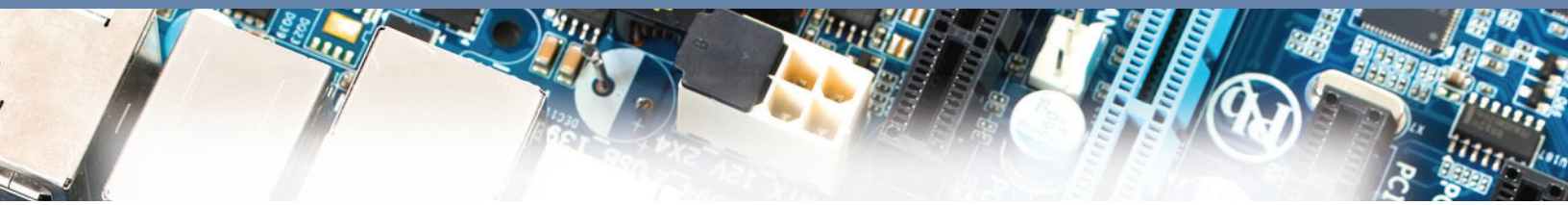

Streeter Photography/Alamy

Capacitor Color

Some capacitors have color-coded designations. The color code used for capacitors is basically the same as that used for resistors. Some variations occur in tolerance designation. The basic color codes are shown in Table 1, and some typical color-coded capacitors are illustrated in Figure 1.

▶ **TABLE 1**

Typical composite color codes for capacitors (picofarads).

COLOR	DIGIT	MULTIPLIER	TOLERANCE
Black	0	1	20%
Brown	1	10	1%
Red	2	100	2%
Orange	3	1000	3%
Yellow	4	10000	
Green	5	100000	5% (EIA)
Blue	6	1000000	
Violet	7		
Gray	8		
White	9		
Gold		0.1	5% (JAN)
Silver		0.01	10%
No color			20%

NOTE: EIA stands for Electronic Industries Association, and JAN stands for Joint Army-Navy, a military standard.

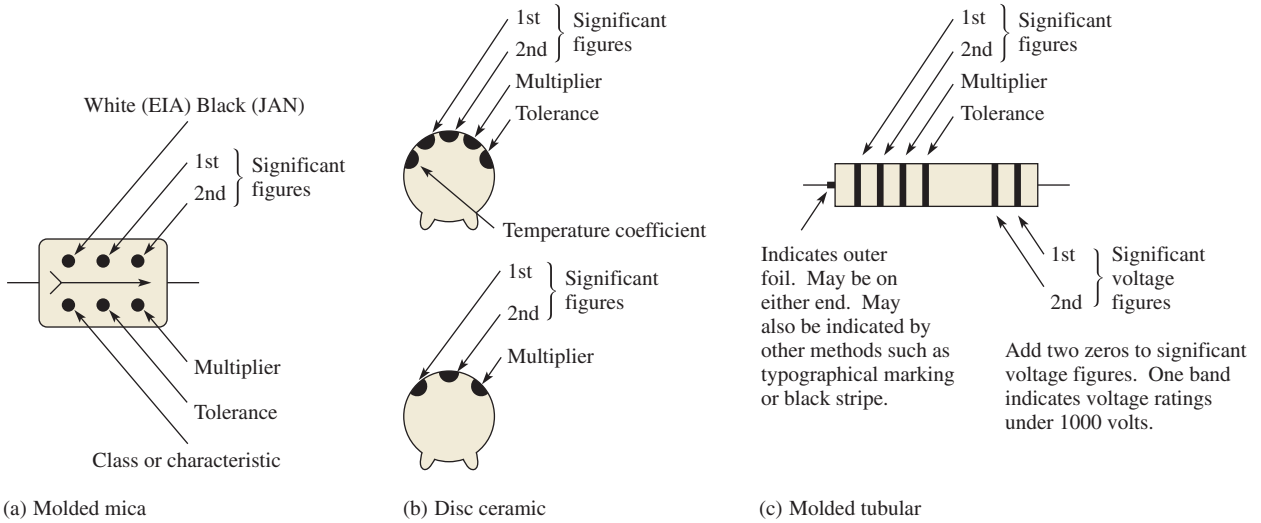

▲ **FIGURE 1**

Typical color-coded capacitors.

www.EngineeringBooksPdf.com

Marking Systems

A capacitor, as shown in Figure 2, has certain identifying features.

- Body of one solid color (off-white, beige, gray, tan or brown).
- End electrodes completely enclose ends of part.
- Many different sizes:
  1. Type 1206: 0.125 inch long by 0.063 inch wide (3.2 mm × 1.6 mm) with variable thickness and color.
  2. Type 0805: 0.080 inch long by 0.050 inch wide (2.0 mm × 1.25 mm) with variable thickness and color.
  3. Variably sized with a single color (usually translucent tan or brown). Sizes range from 0.059 inch (1.5 mm) to 0.220 inch (5.6 mm) in length and in width from 0.032 inch (0.8 mm) to 0.197 inch (5.0 mm).
- Three different marking systems:
  1. Two place (letter and number only).
  2. Two place (letter and number or two numbers).
  3. One place (letter of varying color).

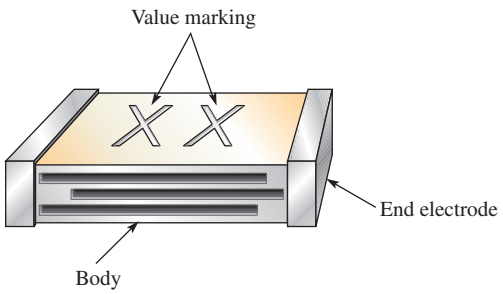

▲ FIGURE 2

Capacitor marking.

Standard Two-Place Code

Refer to Table 2.

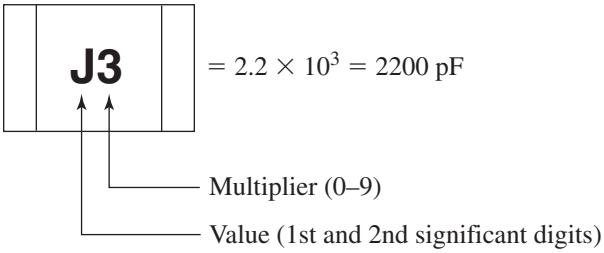

Examples: S2 = 4.7 × 100 = 470 pF
b0 = 3.5 × 1.0 = 3.5 pF

www.EngineeringBooksPdf.com

▶ TABLE 2

VALUE*						MULTIPLIER
A	1.0	L	2.7	T	5.1	0 = ×1.0
B	1.1	M	3.0	U	5.6	1 = ×10
C	1.2	N	3.3	m	6.0	2 = ×100
D	1.3	b	3.5	V	6.2	3 = ×1000
E	1.5	P	3.6	W	6.8	4 = ×10000
F	1.6	Q	3.9	n	7.0	5 = ×100000
G	1.8	d	4.0	X	7.5	etc.
H	2.0	R	4.3	t	8.0	
J	2.2	e	4.5	Y	8.2	
K	2.4	S	4.7	y	9.0	
a	2.5	f	5.0	Z	9.1	

*Note uppercase and lowercase letters.

Alternate Two-Place Code

Refer to Table 3.

- Values below 100 pF—Value read directly

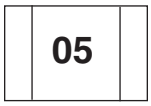

= 5 pF

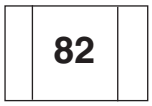

= 82 pF

- Values 100 pF and above—Letter/Number code

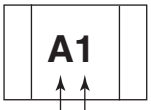

= 10 × 10 = 100 pF

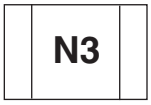

= 33 × 1000
= 33000 pF = .033 μF

Multiplier (1–9)

Value (1st and 2nd significant digits)

▶ TABLE 3

VALUE*						MULTIPLIER
A	10	J	22	S	47	1 = ×10
B	11	K	24	T	51	2 = ×100
C	12	L	27	U	56	3 = ×1000
D	13	M	30	V	62	4 = ×10000
E	15	N	33	W	68	5 = ×100000
F	16	P	36	X	75	
G	18	Q	39	Y	82	etc.
H	20	R	43	Z	91	

*Note uppercase letters only.

www.EngineeringBooksPdf.com

Standard Single-Place Code

Refer to Table 4.

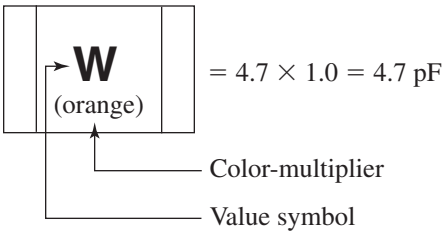

Examples: R (Green) = 3.3 × 100 = 330 pF
7 (Blue) = 8.2 × 1000 = 8200 pF

◀ TABLE 4

VALUE						MULTIPLIER (COLOR)
A	1.0	K	2.2	W	4.7	Orange = ×1.0
B	1.1	L	2.4	X	5.1	Black = ×10
C	1.2	N	2.7	Y	5.6	Green = ×100
D	1.3	O	3.0	Z	6.2	Blue = ×1000
E	1.5	R	3.3	3	6.8	Violet = ×10000
H	1.6	S	3.6	4	7.5	Red = ×100000
I	1.8	T	3.9	7	8.2	
J	2.0	V	4.3	9	9.1	

www.EngineeringBooksPdf.com

This page intentionally left blank

www.EngineeringBooksPdf.com

Norton's Theorem and Millman's Theorem

From Appendix C of *Electronics Fundamentals: Circuits, Devices, and Applications*, Eighth Edition, Thomas L. Floyd, David M. Buchla.
Copyright © 2010 by Pearson Education, Inc. Published by Pearson Prentice Hall. All rights reserved.

www.EngineeringBooksPdf.com

Appendix

Norton's Theorem and Millman's Theorem

Streeter Photography/Alamy

Norton's Theorem

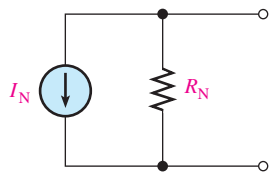

▲ FIGURE 1

The form of Norton's equivalent circuit.

Like Thevenin's theorem, Norton's theorem provides a method of reducing a more complex circuit to a simpler form. The basic difference is that Norton's theorem gives an equivalent current source in parallel with an equivalent resistance. The form of Norton's equivalent circuit is shown in Figure 1. Regardless of how complex the original circuit is, it can always be reduced to this equivalent form. The equivalent current source is designated I_N, and the equivalent resistance is designated R_N.

To apply Norton's theorem, you must know how to find the two quantities I_N and R_N. Once you know them for a given circuit, simply connect them in parallel to get the complete Norton circuit.

Norton's Equivalent Current (I_N) As stated, I_N is one part of the complete Norton equivalent circuit; R_N is the other part. I_N is defined to be the short-circuit current between two points in a circuit. Any component connected between these two points effectively "sees" a current source of value I_N in parallel with R_N.

To illustrate, suppose that a resistive circuit of some kind has a resistor connected between two points in the circuit, as shown in Figure 2(a). We wish to find the Norton circuit that is equivalent to the one shown as "seen" by R_L. To find I_N, calculate the current between points A and B with these two points shorted, as shown in Figure 2(b). Example 1 demonstrates how to find I_N.

▶ FIGURE 2

Determining the Norton equivalent current, I_N.

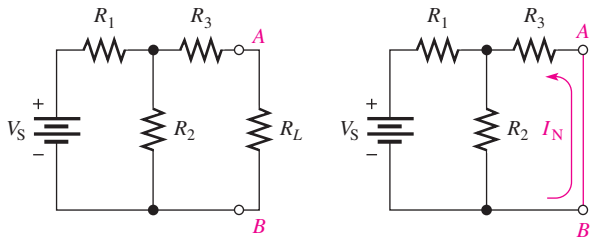

(a) Original circuit (b) Short the terminals to get I_N.

EXAMPLE 1

Determine I_N for the circuit within the shaded area in Figure 3(a).

▶ FIGURE 3

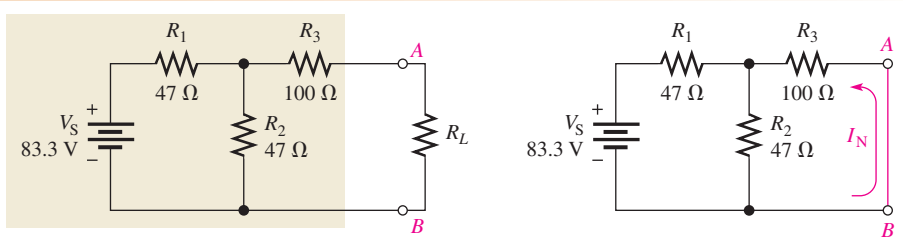

(a) (b)

www.EngineeringBooksPdf.com

Solution Short terminals A and B as shown in Figure 3(b). I_N is the current through the short and is calculated as follows: First, the total resistance seen by the voltage source is

$$R_T = R_1 + \frac{R_2R_3}{R_2 + R_3} = 47\ \Omega + \frac{(47\ \Omega)(100\ \Omega)}{147\ \Omega} = 79\ \Omega$$

The total current from the source is

$$I_T = \frac{V_S}{R_T} = \frac{83.3\ \text{V}}{79\ \Omega} = 1.05\ \text{A}$$

Now apply the current-divider formula to find I_N (the current through the short).

$$I_N = \left(\frac{R_2}{R_2 + R_3}\right)I_T = \left(\frac{47\ \Omega}{147\ \Omega}\right)1.05\ \text{A} = \mathbf{336\ mA}$$

This is the value for the equivalent Norton current source.

Norton's Equivalent Resistance (R_N) We define R_N in the same way as R_{TH}: it is the total resistance appearing between two terminals in a given circuit with all sources replaced by their internal resistances. Example 2 demonstrates how to find R_N.

EXAMPLE 2 Find R_N for the circuit within the shaded area of Figure 3(a) (see Example 1).

Solution First reduce V_S to zero by shorting it, as shown in Figure 4.

Looking in at terminals A and B, you can see that the parallel combination of R_1 and R_2 is in series with R_3. Thus,

$$R_N = R_3 + \frac{R_1}{2} = 100\ \Omega + \frac{47\ \Omega}{2} = \mathbf{124\ \Omega}$$

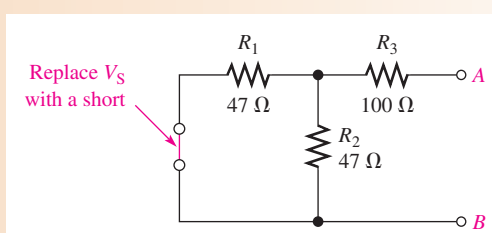

▲ FIGURE 4

The two examples have shown how to find the two equivalent components of a Norton equivalent circuit, I_N and R_N. Keep in mind that these values can be found for any linear circuit. Once these are known, they must be connected in parallel to form the Norton equivalent circuit, as illustrated in Example 3.

www.EngineeringBooksPdf.com

EXAMPLE 3

Draw the complete Norton circuit for the original circuit in Figure 3 (Example 1).

Solution In Examples 1 and 2 you found that $I_N = 336$ mA and $R_N = 124\ \Omega$. The Norton equivalent circuit is shown in Figure 5.

▶ FIGURE 5

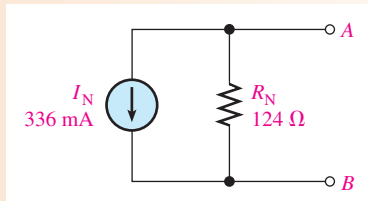

Summary of Norton's Theorem Any load resistor connected between the terminals of a Norton equivalent circuit will have the same current through it and the same voltage across it as if it were connected to the terminals of the original circuit. A summary of steps for theoretically applying Norton's theorem is as follows:

1. Short the two terminals between which you want to find the Norton equivalent circuit.
2. Determine the current (I_N) through the shorted terminals.
3. Determine the resistance (R_N) between the two terminals (opened) with all voltage sources shorted and all current sources opened ($R_N = R_{TH}$).
4. Connect I_N and R_N in parallel to produce the complete Norton equivalent for the original circuit.

Norton's equivalent circuit can also be derived from Thevenin's equivalent circuit by use of the source conversion method.

Millman's Theorem

Millman's theorem permits any number of parallel voltage sources to be reduced to a single equivalent voltage source. It simplifies finding the voltage across or current through a load. Millman's theorem gives the same results as Thevenin's theorem for the special case of parallel voltage sources. A conversion by Millman's theorem is illustrated in Figure 6.

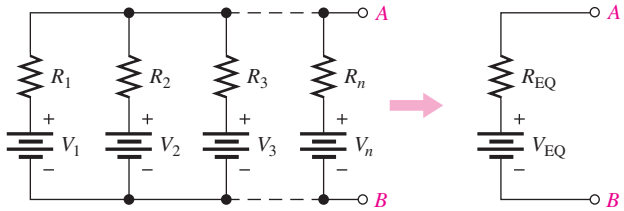

▲ FIGURE 6

Reduction of parallel voltage sources to a single equivalent voltage source.

www.EngineeringBooksPdf.com

Millman's Equivalent Voltage (V_{EQ}) and Equivalent Resistance (R_{EQ}) Millman's theorem gives us a formula for calculating the equivalent voltage, V_{EQ}. To find V_{EQ}, convert each of the parallel voltage sources into the current sources, as shown in Figure 7.

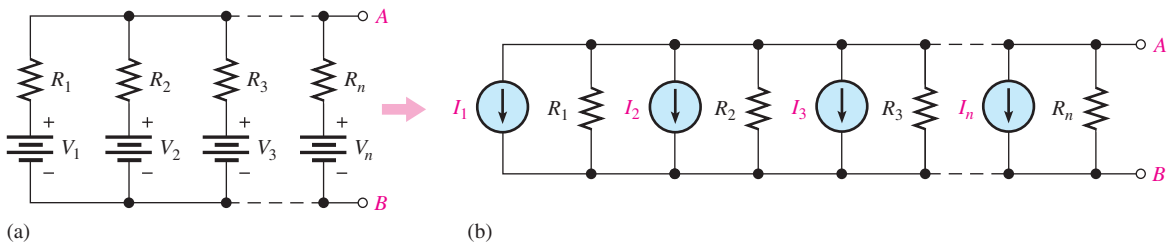

▲ **FIGURE 7**

Parallel voltage sources converted to current sources.

In Figure 7 (b), the total current from the parallel current sources is

$$I_T = I_1 + I_2 + I_3 + \cdots + I_n$$

The total conductance between terminals A and B is

$$G_T = G_1 + G_2 + G_3 + \cdots + G_n$$

where $G_T = 1/R_T$, $G_1 = 1/R_1$, and so on. Remember, the current sources are effectively open. Therefore, by Millman's theorem, the equivalent resistance, R_{EQ}, is the total resistance R_T.

$$R_{EQ} = \frac{1}{G_T} = \frac{1}{(1/R_1) + (1/R_2) + (1/R_3) + \cdots + (1/R_n)} \qquad \text{Equation 1}$$

By Millman's theorem, the equivalent voltage is $I_T R_{EQ}$, where I_T is expressed as follows:

$$I_T = I_1 + I_2 + I_3 + \cdots + I_n = \frac{V_1}{R_1} + \frac{V_2}{R_2} + \frac{V_3}{R_3} + \cdots + \frac{V_n}{R_n}$$

The following is the formula for the equivalent voltage:

$$V_{EQ} = \frac{(V_1/R_1) + (V_2/R_2) + (V_3/R_3) + \cdots + (V_n/R_n)}{(1/R_1) + (1/R_2) + (1/R_3) + \cdots + (1/R_n)} \qquad \text{Equation 2}$$

Equations 1 and 2 are the two Millman formulas. The equivalent voltage source has a polarity such that the total current through a load will be in the same direction as in the original circuit.

EXAMPLE 4

Use Millman's theorem to find the voltage across R_L and the current through R_L in Figure 8.

▶ **FIGURE 8**

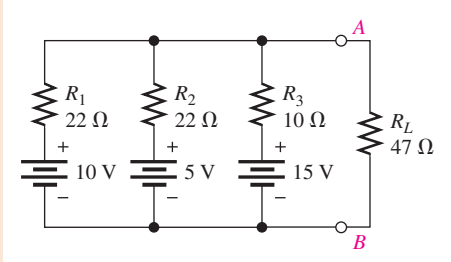

www.EngineeringBooksPdf.com

Solution Apply Millman's theorem as follows:

$$R_{EQ} = \frac{1}{(1/R_1) + (1/R_2) + (1/R_3)}$$

$$= \frac{1}{(1/22\,\Omega) + (1/22\,\Omega) + (1/10\,\Omega)} = \frac{1}{0.19} = 5.24\,\Omega$$

$$V_{EQ} = \frac{(V_1/R_1) + (V_2/R_2) + (V_3/R_3)}{(1/R_1) + (1/R_2) + (1/R_3)}$$

$$= \frac{(10\text{ V}/22\,\Omega) + (5\text{ V}/22\,\Omega) + (15\text{ V}/10\,\Omega)}{(1/22\,\Omega) + (1/22\,\Omega) + (1/10\,\Omega)} = \frac{2.18\text{ A}}{0.19\text{ S}} = 11.5\text{ V}$$

The single equivalent voltage source is shown in Figure 9.

Now calculate I_L and V_L for the load resistor.

$$I_L = \frac{V_{EQ}}{R_{EQ} + R_L} = \frac{11.5\text{ V}}{52.2\,\Omega} = \mathbf{220\text{ mA}}$$

$$V_L = I_L R_L = (220\text{ mA})(47\,\Omega) = \mathbf{10.3\text{ V}}$$

▶ **FIGURE 9**

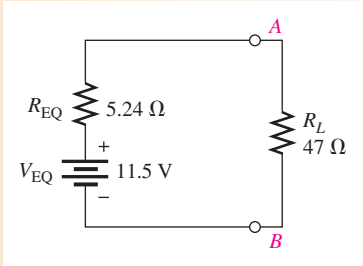

www.EngineeringBooksPdf.com

Field-Programmable Analog Arrays (FPAAs)

Appendix

Streeter Photography/Alamy

FPAAs are integrated circuit devices that are programmed using development software to provide for implementing analog circuit designs on a chip. An FPAA can be originally programmed or reprogrammed statically on an evaluation or development board. Once the design has been completed and tested on the evaluation board, it can then be dynamically programmed into FPAAs installed on a system board.

The general setup for programming a circuit design into an FPAA includes a computer running the development software, a pc board with a standard interface to a computer port, and the FPAA device installed on the pc board (usually called a development or an evaluation board). A representation of this setup is shown in Figure 1.

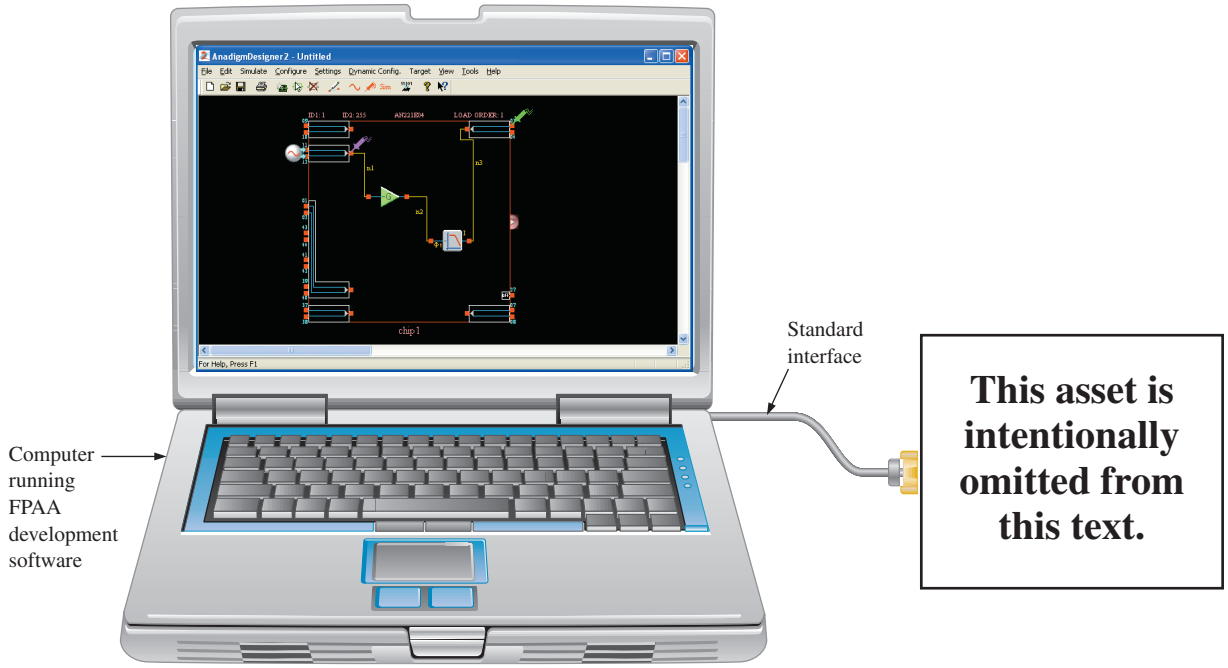

▲ FIGURE 1

Simplified illustration of the setup for programming an FPAA.

Development Software

Development software provides for entering a circuit design on the computer, simulating the design to make sure that it operates as expected, and downloading the design to the FPAA chip.

Using the software, you can select from a library of analog circuits, then drag and drop the selected ones onto the screen. Once the circuits are on the screen, certain parameters can be set. For example, you can set the gain of an amplifier, the critical frequency of a

From Appendix D of *Electronics Fundamentals: Circuits, Devices, and Applications*, Eighth Edition, Thomas L. Floyd, David M. Buchla.
Copyright © 2010 by Pearson Education, Inc. Published by Pearson Prentice Hall. All rights reserved.

www.EngineeringBooksPdf.com

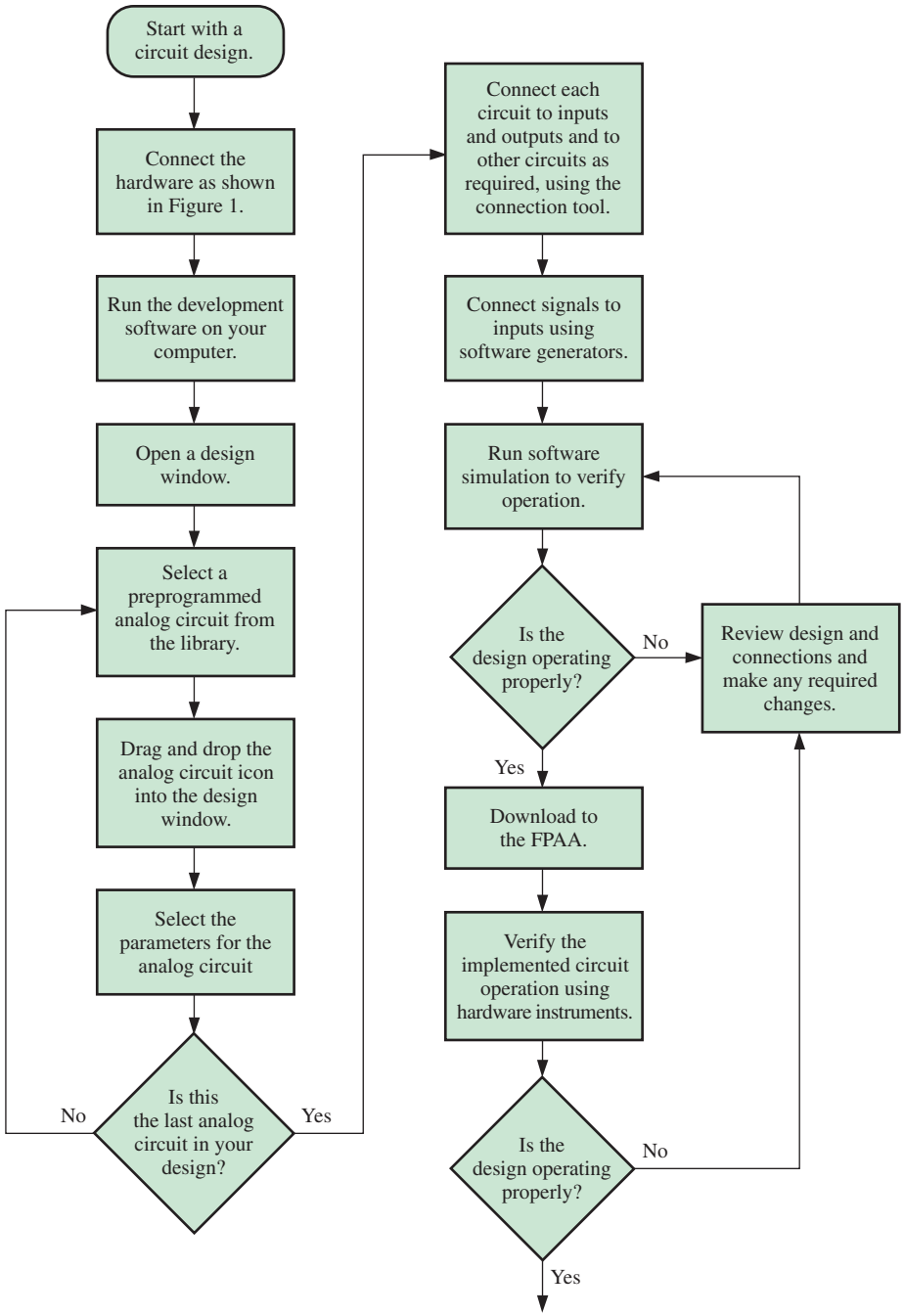

▲ **FIGURE 2**

Flow chart for general programming of an FPAA.

filter, the output rate of change of an integrator, and so on. The circuits can then be connected to inputs and outputs and to each other to create an on-screen circuit diagram. Once the circuit is tested, you can then download it to the chip. A flow chart showing the general programming procedure is given in Figure 2.

Occasionally, when a circuit design is downloaded to the FPAA, the operation may vary slightly from that of the software simulation. In this event, an FPAA chip can be reprogrammed as many times as needed in order to tweak or adjust the design to achieve the precise hardware operation that is required.

www.EngineeringBooksPdf.com

Programming with a Specific Development Software

An excellent example of FPAA development software is the AnadigmDesigner2. The AnadigmDesigner2 software provides for the selection, placement, wiring, and simulation of one or more subcircuits called CAMs. The **CAMs** (configurable analog modules) are the "building blocks" for analog designs and are preconstructed analog functions that can be adjusted for desired parameter values.

A partial list of available CAMs is given in Table 1. For each CAM, the parameters can be programmed or reprogrammed for desired performance. For example, for the biquadratic filter CAM you can set the gain, critical frequency, and Q. Some CAMs are single function, such as the integrator; some are multiple function, such as the biquadratic filter where you can select low-pass, high-pass, band-pass, or band-stop versions.

Begin with a blank design window as shown in Figure 3. CAMs will be selected and placed in this window and connected. At any time, you can start over with a blank design

CONFIGURABLE ANALOG MODULES (CAMs)	
Analog-to-digital converter	Integrator
Bilinear filter	Inverting gain stage
Biquadratic filter	Inverting sum stage
DC voltage source	Multiplier
Differential comparator	Periodic waveform generator
Differentiator	Rectifier with low-pass filter
Divider	Sample-and-hold
Gain stage with output voltage limiting	Sine wave oscillator
Gain stage with polarity control	Square root circuit
Gain stage with switchable inputs	Sum/difference stage with low-pass filter
Half-cycle gain stage	Voltage-controlled variable gain stage
Half-cycle inverting gain stage	Voltage transfer function
Half-cycle inverting rectifier	
Half-cycle rectifier	

◀ TABLE 1

Partial list of the CAMs available in the AnadigmDesigner2 software.

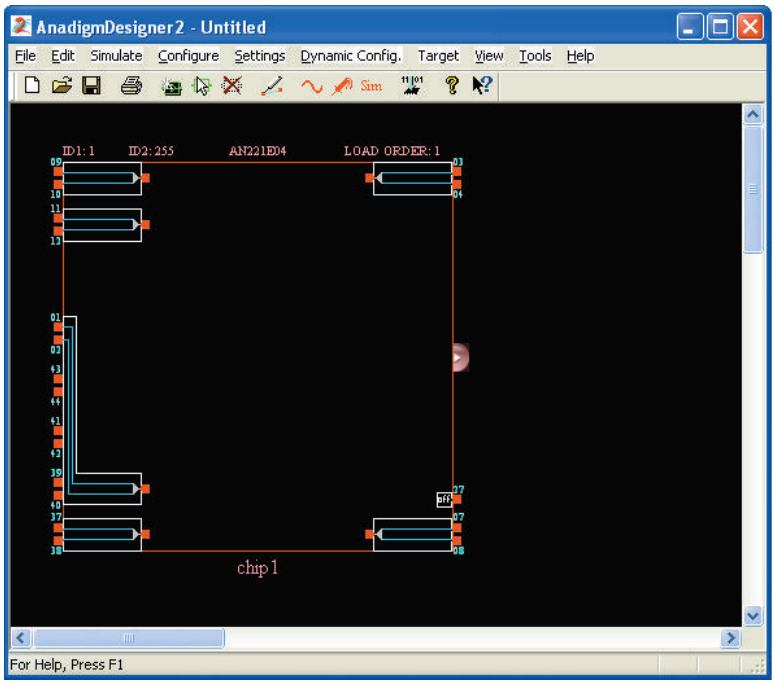

◀ FIGURE 3

Blank design window.

www.EngineeringBooksPdf.com

window by selecting *New* from the File menu or by deleting a CAM and connections. Only a brief description of each step is given. For more details on any steps, refer to the website at www.anadigm.com to download appropriate literature. A very simple single-CAM circuit is used to illustrate the steps.

The next step is to select a CAM from the CAM Selection Dialog Box, which is opened by clicking on the symbol in the tool bar. In this case, we have selected the integrator as shown in Figure 4.

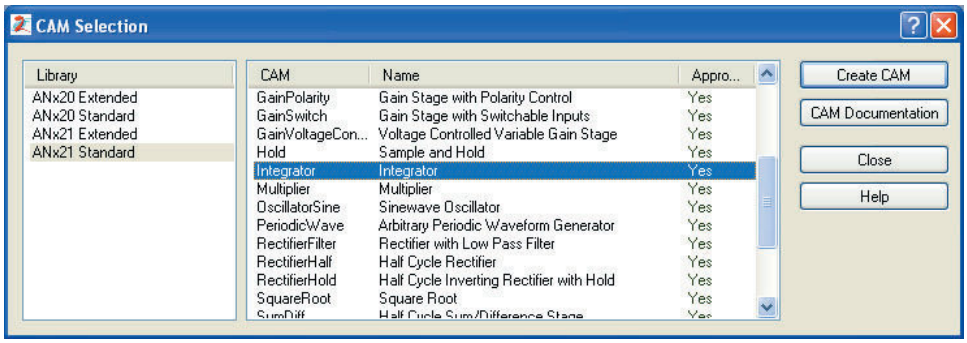

▶ FIGURE 4

Dialog box for selection of configurable analog modules (CAMs).

Next, drag the selected CAM icon and drop it into the design window. Using the connection tool. "wire" the CAM as required. In this case, the integrator is simply connected to an input and an output, as indicated in Figure 5.

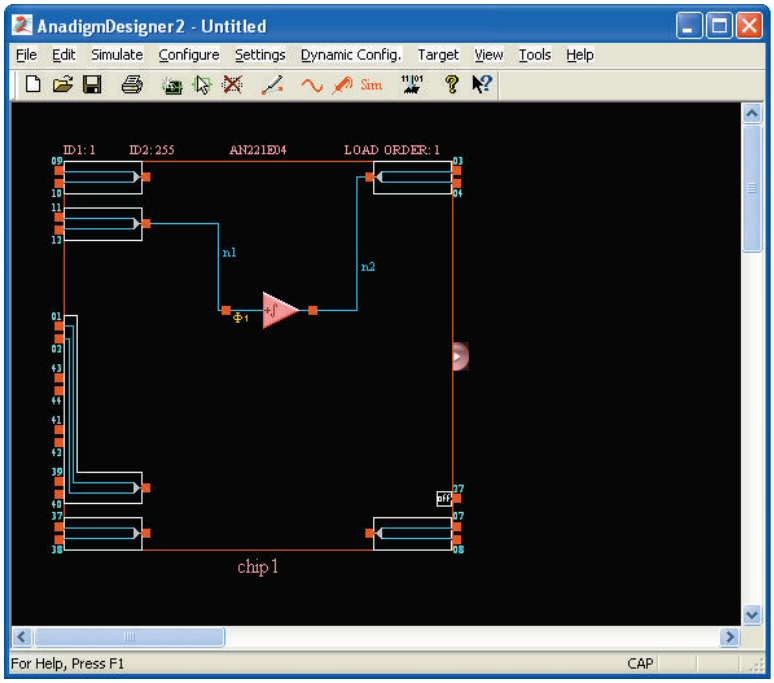

▶ FIGURE 5

The integrator CAM is dropped into the design window and connected.

Once the CAM is selected and before it is wired, the Parameters box appears, as shown in Figure 6. The number of parameters that you can set depends on the type of CAM. In this case, the integration constant is the only parameter to be determined. Also, you can make the integrator inverting or noninverting.

www.EngineeringBooksPdf.com

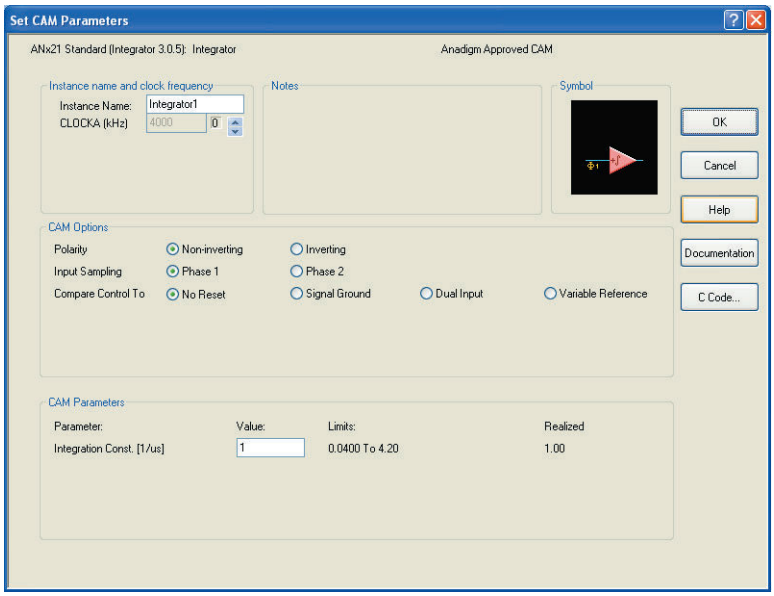

FIGURE 6

Dialog box for setting CAM parameters.

The circuit is now installed and connected in the design window, and you have selected the CAM parameter(s). Now, you should verify that the circuit operates properly by running a simulation. First, select the signal generator and place the icon at the input pin. Click on the icon to bring up the parameter window, select the appropriate function, and set the values. In this example, the pulse output has been selected, the frequency has been set to 100 kHz, the peak value to 1 V, and the duty cycle to 50%, as shown in Figure 7.

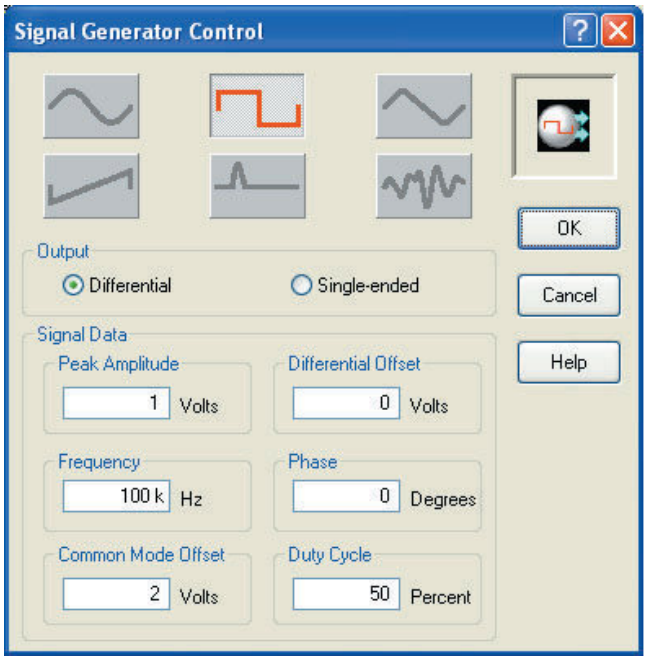

FIGURE 7

Signal generator parameter window.

Finally, select the oscilloscope probe icon and place it on the input. Select it again and place another probe on the output, as shown in Figure 8. Up to four probes can be placed on wires, CAM inputs or outputs, or any input or output cell.

www.EngineeringBooksPdf.com

▶ **FIGURE 8**

Source connected and oscilloscope probes placed on input and output of circuit for simulation.

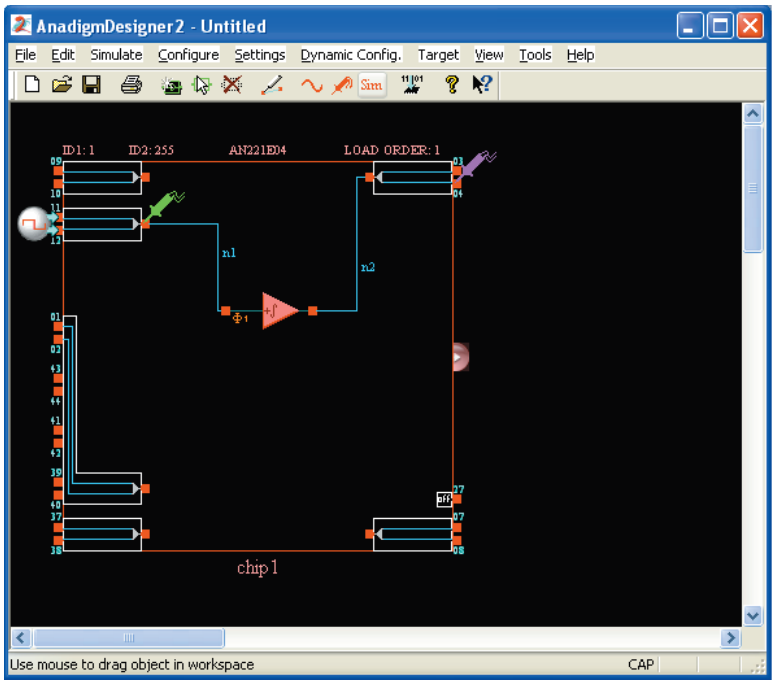

Begin the simulation and observe the result on the oscilloscope. In this example, the input is the square wave, and the output is the triangular wave, as shown in Figure 9.

▶ **FIGURE 9**

Oscilloscope display verifies circuit operation.

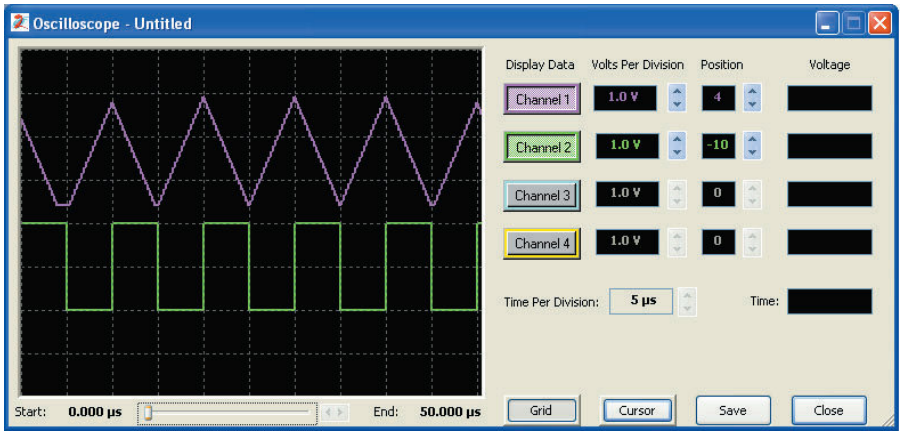

Downloading the Circuit to the FPAA Assuming that an evaluation board (one type is shown in Figure 10) is connected to the serial port of the computer, you can download the design to the FPAA installed on the board. **Downloading** is the process of putting the software design into the FPAA chip and is accomplished by selecting the menu item *Configure > Write the configuration data to serial port.* It takes only about two seconds. After the download, the circuit is implemented in the chip and can be tested by connecting an actual signal generator and oscilloscope to the appropriate pins on the board.

Example Application

A PBX (private branch exchange) is a private telephone network generally used by businesses. The PBX connects a certain number of telephones within a business to a smaller number of outside lines. For example, there may be four outside lines for twenty telephones. The PBX is much less expensive than connecting a separate outside telephone line

www.EngineeringBooksPdf.com

This asset is intentionally omitted from this text.

◀ FIGURE 10

An evaluation board with an FPAA installed.

to every telephone in the organization. Also, to call someone else on the same PBX system requires dialing fewer digits (typically three or four). A variation of the PBX is the centrex, which is a type of PBX with the switching equipment located at the telephone exchange instead of at a company's premises.

Different PBX systems provide various types of signals that must be conditioned. The data must be extracted from these signals and sent on for further processing. FPAAs can be used to provide the analog signal processing portion of a PBX's operation.

Signal Encoding In this application, an encoding method based on AMI (alternate mark inversion) is used. AMI uses three voltage levels to represent digital data, which consists of 1s and 0s. In an AMI signal, either a positive or a negative signal voltage represents a 1 and zero signal voltage represents of 0. The alternate polarity coding is used because it prevents the buildup of a dc voltage level down the telephone cable. An example of an AMI signal and the bit stream that it represents is shown by the blue waveform in Figure 11.

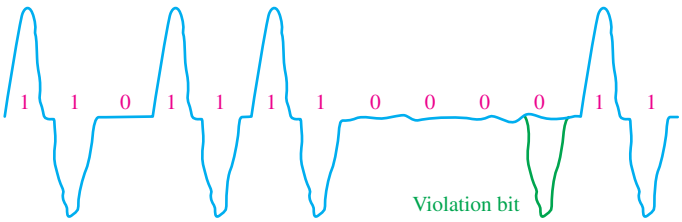

◀ FIGURE 11

Example of an AMI (alternate mark inversion) signal.

A long string of 0s in the synchronized AMI signal produces no transitions, and can prevent the clock from being reliably recovered by the PLL at the receiving end, thus causing loss of synchronization and resulting in errors. To overcome this problem, new encoding methods have been developed. One of these methods is called *high-density bipolar order 3* (HDB3) and is based on AMI but avoids the problem of losing synchronization created when long strings of 0s occur. HDB3 is the same as AMI except that a sequence of four consecutive 0s are encoded using a *violation bit,* which has the same polarity as the last 1, in order to introduce a transition for maintaining synchronization, as shown by the green pulse in Figure 11.

www.EngineeringBooksPdf.com

Conversion of an AMI Signal An AMI (or HDB3) signal must be converted to a series of single-polarity pulses that can be processed in the PBX. A block diagram for converting an AMI signal to single-polarity data is shown in Figure 12.

▶ **FIGURE 12**

Basic block diagram of AMI conversion.

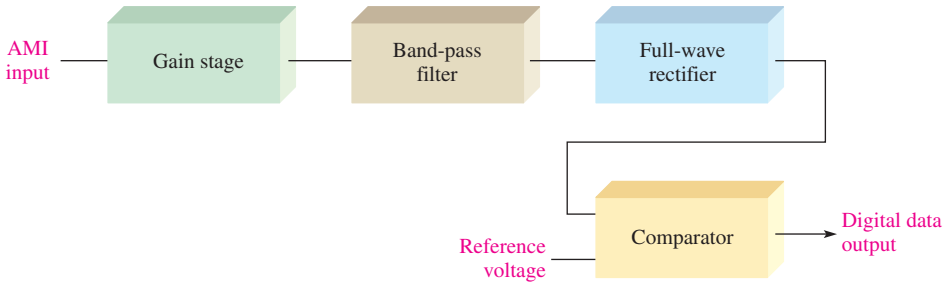

This circuit has an *amplifier* with gain (gain stage) at the input. The *band-pass filter* is used to remove high-frequency noise and the 60 Hz component present in the system. The signal out of the filter goes to the *full-wave rectifier* to make all the pulses positive. The signal then goes to one of the comparator inputs. Every time the signal out of the rectifier crosses a threshold established by a reference voltage, the comparator produces a positive pulse, representing a 1. When the rectifier output is zero, the comparator output is at its low level, representing a 0.

The FPAA Implementation The circuit represented by the block diagram in Figure 12 is implemented with CAMs, as shown in Figure 13. The amplifier is an inverting gain stage; the filter is a biquad filter selected for the band-pass mode; the rectifier is a fullwave rectifier with low-pass filter; and the comparator has a variable voltage reference on the inverting input. The output cell is configured for a digital output to produce a sharp digital signal for processing by other circuits.

To simulate the operation, an AMI input waveform must be captured into a data file with time/amplitude pairs so that the software signal generator can be used. There is a data file

▶ **FIGURE 13**

Implemention of the block diagram in Figure 12.

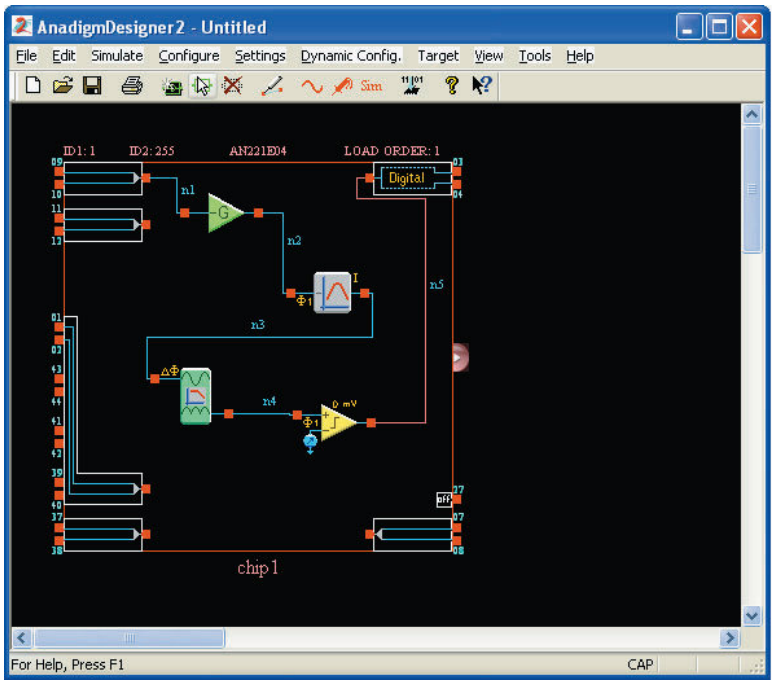

www.EngineeringBooksPdf.com

selection button on the AnadigmDesigner2 signal generator dialog box. Using the data file waveform generator, you can produce any waveform you need. Each record in the data file consists of ASCII codes representing the time and amplitude of a waveform at a point. When many of these time/amplitude pairs are connected by the simulator, a piecewise linear waveform is generated. Spreadsheet programs are useful in creating piecewise linear signal data files, but this topic is beyond our scope.

A PBX signal can originate from different switch manufacturers, so the signal characteristic that the FPAA implementation must handle, usually signal amplitude and shape, can vary. The gain stage and the reference voltage can be reprogrammed to accommodate these variations in signal characteristics. The frequency used in PBXs is constant so the filter does not normally have to be reprogrammed. Reconfiguration allows a single design to be used to interface with a variety of PBX switches.

Simulation of the Design A 20 kHz, 2 V triangular wave input signal is used to check the circuit. The probes are placed as shown in Figure 14 and the simulation is run. Although the input is not an AMI type signal, the alternating triangular wave shows that the rectifier output is triggering the comparator at a reference voltage of 1 V to produce a digital output, as shown in Figure 15. The color of each signal corresponds to the color of the probe to identify the points being measured.

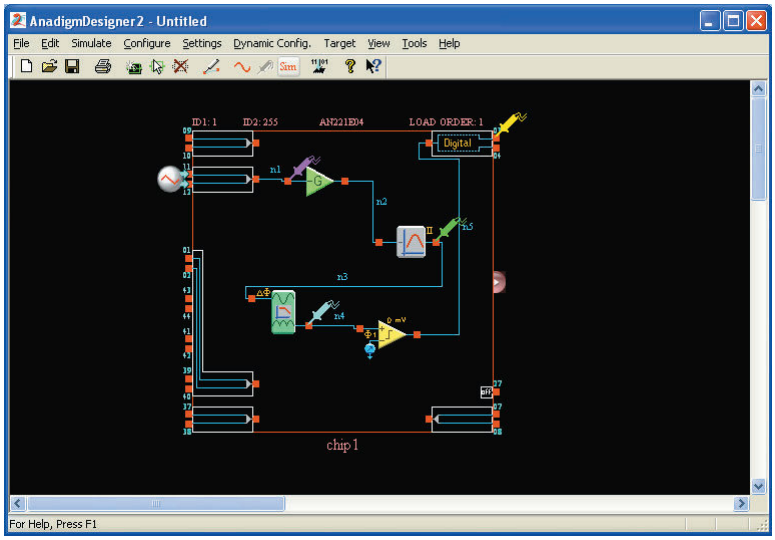

◀ FIGURE 14

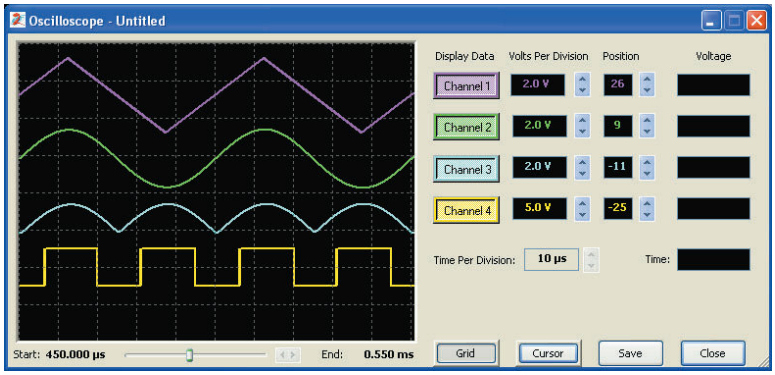

◀ FIGURE 15

Waveforms for the circuit in Figure 14.

www.EngineeringBooksPdf.com

This page intentionally left blank

www.EngineeringBooksPdf.com

NI MULTISIM FOR CIRCUIT SIMULATION

From Appendix E of *Electronics Fundamentals: Circuits, Devices, and Applications*, Eighth Edition, Thomas L. Floyd, David M. Buchla.
Copyright © 2010 by Pearson Education, Inc. Published by Pearson Prentice Hall. All rights reserved.

www.EngineeringBooksPdf.com

Appendix

NI Multisim for Circuit Simulation

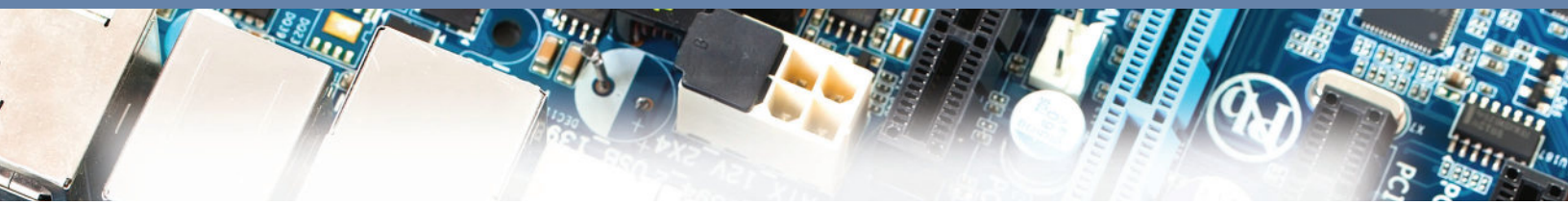

Streeter Photography/Alamy

Simulate, Prototype, and Test Circuits

Theory, Design, and Prototype

As electronic circuits and systems become more advanced, circuit designers rely on computers in the design process. It is essential for engineers and technicians to systematically design, simulate, prototype, and lay out the circuit. Students can also use the engineering and design process to reinforce concepts and theory in the classroom. The three stages of the student design process are illustrated in Figure 1.

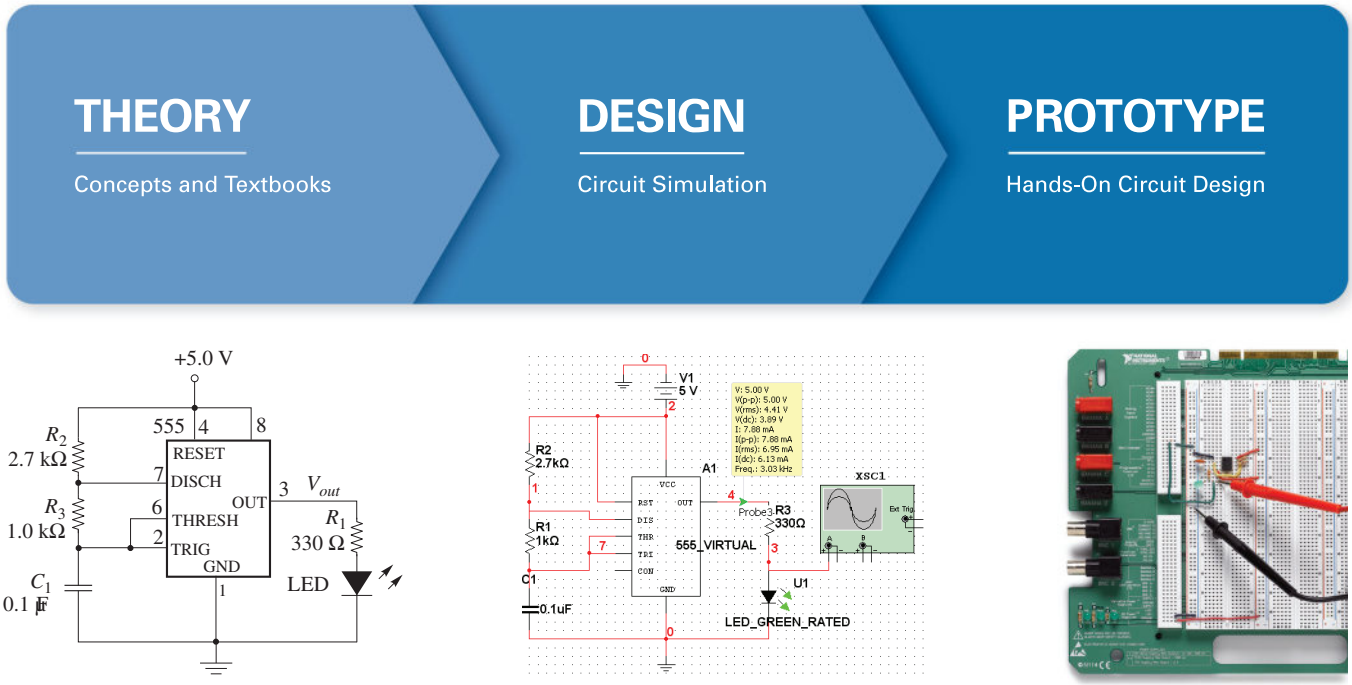

▲ FIGURE 1

Three steps of the student design process for a practical circuit.

© Copyright 2009 National Instruments Corporation. All rights reserved. LabVIEW, Multisim, NI, Ultiboard and National Instruments are trademarks and trade names of National Instruments. Other product and company names are trademarks or trade names of their respective companies.

Notice: This appendix was written for use with the Multisim Version 10.0 software. Some or all of the information in this Appendix may not apply to other versions of the software.

www.EngineeringBooksPdf.com

The National Instruments Electronics Education Platform is an end-to-end tool-chain designed to meet student and educator needs. The platform consists of NI Multisim simulation software, the NI Educational Laboratory Virtual Instrumentation Suite (NI ELVIS) prototyping workstation, and the NI LabVIEW graphical programming environment. NI Multisim provides intuitive schematic capture, SPICE simulation, and integration with the NI ELVIS to help students explore circuit theory and design circuits to investigate behavior. NI ELVIS is a prototyping platform that allows students to quickly and easily create their circuits. With NI LabVIEW, students can measure real-world signals and compare simulation results.

1. Investigate Theory Learn the fundamental theory of circuit design through the *Electronics Fundamentals: Circuits, Devices, and Applications* textbook and course lectures. Reinforce important concepts in the easy-to-use Multisim environment by downloading the Multisim circuit files for the textbook. The Multisim circuit files help build the foundation for an in-depth understanding of circuit behavior. Using the prebuilt circuit files, simulate and analyze the circuit behavior of examples and problems in each chapter.

2. Design and Simulate Circuit simulation provides an interactive view into a circuit. Build a circuit from scratch and learn about the design performance using built-in circuit instruments and probes in an ideal pre-laboratory environment. With the 3D breadboard in Multisim, take the leap from circuit diagram to real-world physical implementation.

3. Prototype, Measure, and Compare Hands-on experience building physical circuitry is essential. Move from the 3D breadboard in Multisim to a real-world breadboard on NI ELVIS to seamlessly complete the entire design process by prototyping the circuit. Within the LabVIEW environment, compare real-world measurements to the simulation values to reinforce theory, fully understand circuit behavior, and build the foundations of professional engineering analysis.

NI Multisim

Multisim software integrates powerful SPICE simulation and schematic capture into a highly intuitive electronics lab on the computer. Use the Multisim Student Edition to enhance learning by:

- Building circuits in a simple, easy-to-learn environment
- Simulating and analyzing circuits for homework and prelab assignments
- Breadboarding in 3D at home before lab sessions
- Creating designs of up to 50 components using a library of nearly 4,000 devices
- Integrating with the NI ELVIS prototyping workstation

While using industry-standard SPICE in the background, you can take advantage of the Multisim drag-and-drop interface to make circuit drawing, wiring, and analysis simple and easy to use. You can build circuits from scratch and learn about design performances using built-in virtual instruments and probes in an ideal environment for experimentation. With the 3D breadboard, you can easily take the leap from circuit diagram to real-world implementation.

Using Multisim with Electronics Fundamentals: Circuits, Devices, and Applications Create an example from the textbook to get familiar with the Multisim environment. First, launch Multisim and open a new schematic window (**File >> New >> Schematic Capture**). Design circuits in the circuit window by placing components from the component toolbar. Clicking on the component toolbar opens the component browser. Choose the family of components and select an individual component to place on the circuit window by double-clicking on it.

Once you have selected a component, it attaches itself and "ghosts" the mouse cursor. Place the component by clicking again on the desired location in the schematic. If you are

www.EngineeringBooksPdf.com

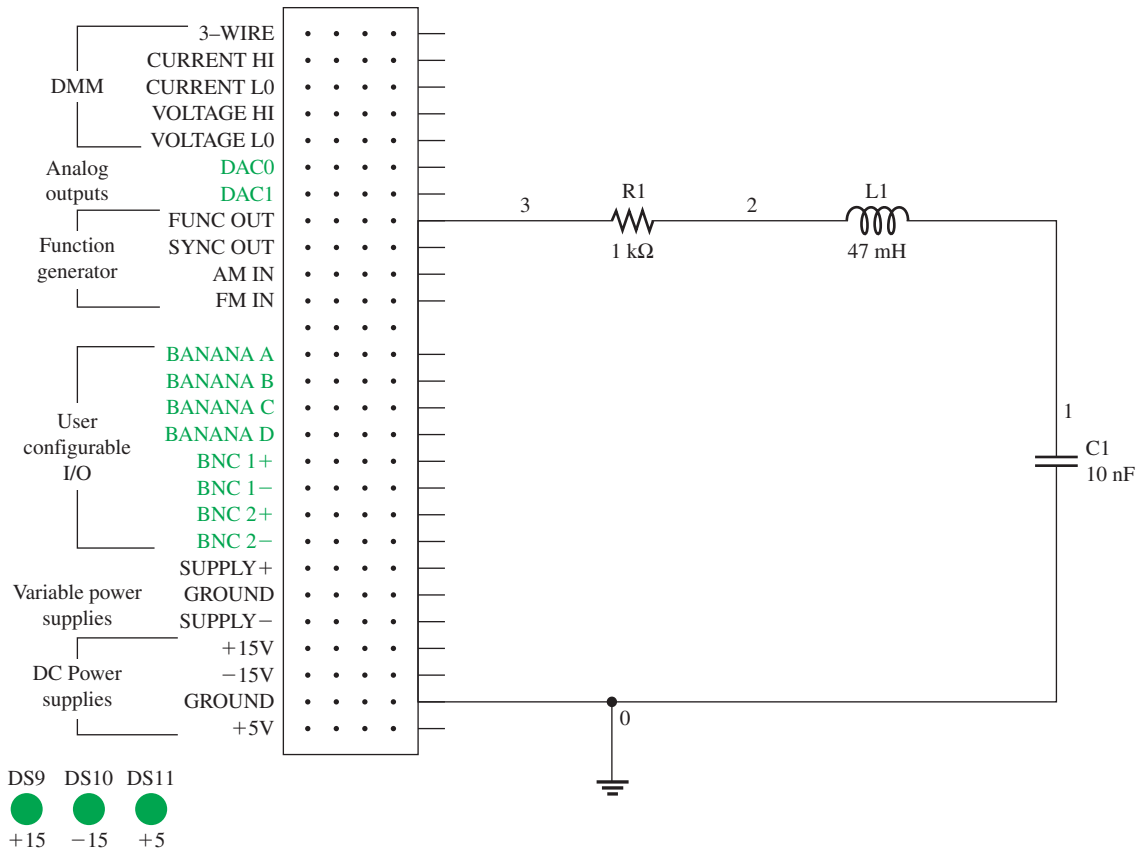

▲ **FIGURE 2**

Multisim schematic of *RLC* circuit.

new to Multisim, you should use the **BASIC_VIRTUAL** family of components, which you can assign any arbitrary value. As an example of a simple Multisim circuit, an *RLC* circuit is shown in Figure 2. The circuit connects a 1 kΩ resistor, a 47 mH inductor, and a 10 nF capacitor. All these components are found in the Basic Group of the Component Database.

The next step is to wire the components together. Simply left-click on the source terminal and left-click on the destination terminal. Multisim automatically chooses the best path for the virtual wire between the two terminals. Always be sure you have fully captured your circuit; then you can simulate it. You can use your simulation results as a comparison with the physical circuit.

To analyze the circuit, use a measurement probe to measure the voltages and other characteristics from the circuit while the simulation is running. Use the virtual oscilloscope to analyze the output signal from our sample *RLC* circuit.

NI ELVIS

NI ELVIS is a LabVIEW-based design and prototyping environment based on LabVIEW for university science and engineering laboratories. NI ELVIS consists of virtual instruments, or functions, based on LabVIEW; a multifunction data acquisition device; and a custom-designed benchtop workstation and prototyping board. This combination provides a ready-to-use suite of instruments for educational laboratories. The NI ELVIS workstation is shown in Figure 3.

NI ELVIS is an ideal companion to any electronics lab that uses Multisim. It features USB connectivity for easy setup, maintenance, and portability, as well as a portable breadboard for real-world circuit prototyping.

www.EngineeringBooksPdf.com

◀ FIGURE 3

The NI ELVIS workstation.

NI ELVIS features a breadboard prototyping environment with built-in instruments including a function generator, digital multimeter (DMM), oscilloscope, and variable power supplies. The breadboard is detachable, so you can work on your projects and labs independently of the NI ELVIS unit. NI ELVIS provides software based on LabVIEW for interacting with virtual instruments.

Using NI ELVIS with Electronics Fundamentals: Circuits, Devices, and Applications

Returning to the *RLC* circuit introduced with Multisim as an example, you can continue the prototyping step. With prototyping hardware, you can quickly construct a circuit on a standard protoboard and test it with the laboratory instruments to complete the design.

Alternatively, you can repeat the simulation step but this time as a prototype using the Virtual 3D NI ELVIS from within Multisim. To construct a 3D NI ELVIS prototype, open the 3D breadboard by clicking **Tools >> Show Breadboard**. Place components and wires to build up your circuit. The corresponding connection points and symbols on the NI ELVIS schematic turn green, indicating the 3D connections are correct. If you create a traditional schematic, you see a standard breadboard. Figure 4 shows the circuit on 3D Virtual

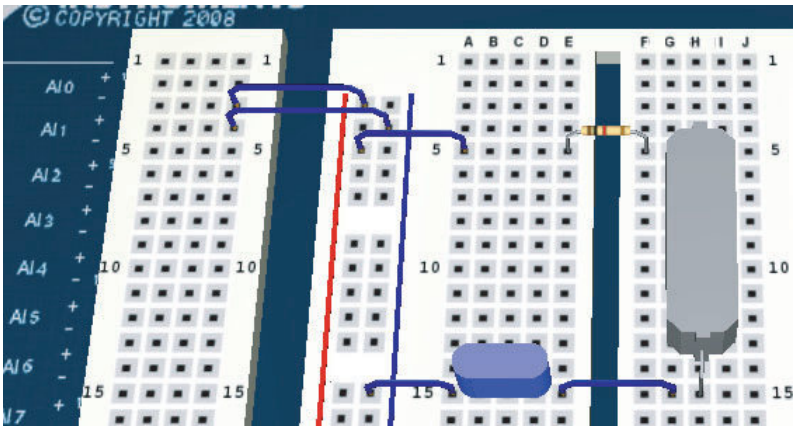

▲ FIGURE 4

Prototyped circuit in Multisim.

www.EngineeringBooksPdf.com

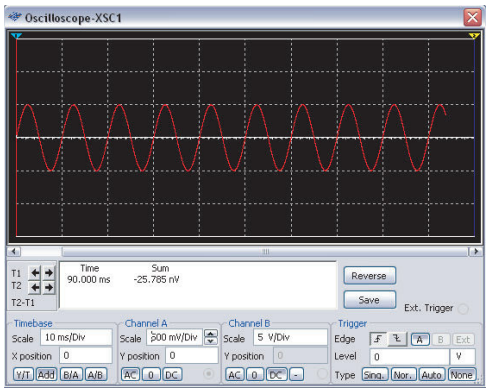

▲ FIGURE 5

Multisim simulated signal.

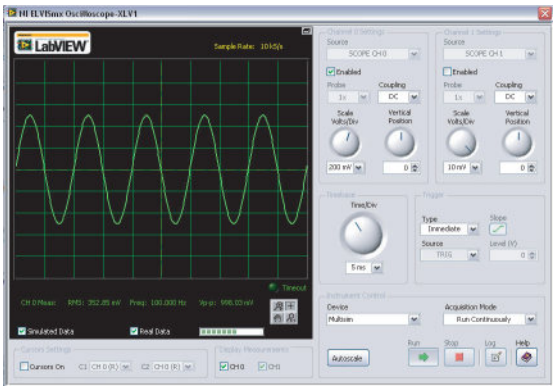

▲ FIGURE 6

NI ELVIS measured signal.

NI ELVIS prototyped in Multisim and ready for construction. Once you have verified the layout of your circuit using the 3D virtual environment, you can physically build it on NI ELVIS.

After constructing the circuit, you can use the NI ELVIS instrument launcher to measure the output signal of this circuit. Figure 5 shows the simulated signal of the *RLC* circuit on the Multisim oscilloscope. Figure 6 shows the measured signal using the ELVIS II Oscilloscope. The most important step in the process is to compare the measurement of the prototyped circuit to the simulation. This helps you determine where potential errors exist in the design. After comparing the measurement with the theoretical values, you can revisit your design to improve it or prepare it for layout on a PCB board, using software such as NI Ultiboard.

NI Multisim Circuit Files Download the Multisim circuit files to develop in-depth understanding of circuit behavior. To download the pre-built circuit files and Multisim resources, visit: ni.com/academic/floyd

NI Multisim Resources The link provides references to the following resources to help you get started with NI Multisim:

Download the free Multisim 30-day evaluation version
View the Getting Started Guide to Multisim
Learn Multisim in 3-Hours tutorial
Discuss Multisim in an online discussion forum

www.EngineeringBooksPdf.com

GLOSSARY

From Glossary of *Electronics Fundamentals: Circuits, Devices, and Applications*, Eighth Edition, Thomas L. Floyd, David M. Buchla.
Copyright © 2010 by Pearson Education, Inc. Published by Pearson Prentice Hall. All rights reserved.

www.EngineeringBooksPdf.com

GLOSSARY

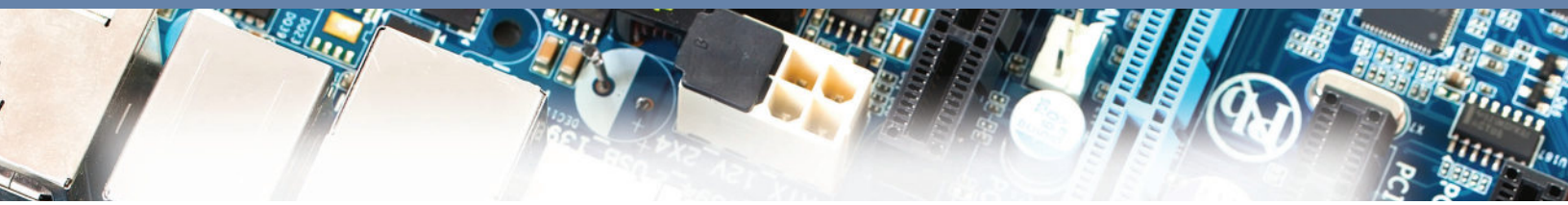

Streeter Photography/Alamy

accuracy An indication of the range of error in a measurement.

acquisition time The time required for the sample-and-hold to reach its final value when the control voltage changes from its hold level to its sample level.

active filter A frequency-selective circuit consisting of one or more op-amps combined with reactive elements (usually an *RC* network).

ADC Analog-to-digital converter; a device used to convert an analog signal to a sequence of digital codes.

admittance (Y) A measure of the ability of a reactive circuit to permit current; the reciprocal of impedance. The unit is the siemens (S).

ah rating A capacity rating for batteries determined by multiplying the current in amps (A) times the length of time in hours (h) a battery can deliver that current to a load.

alpha (α) The ratio of collector current to emitter current in a bipolar junction transistor.

alternator An ac generator that converts energy of motion into electrical energy.

ammeter An electrical instrument used to measure current.

ampere (A or amp) The unit of electrical current.

ampere-turn The SI unit of magnetomotive force (mmf).

amplification The process of producing a larger voltage, current, or power using a smaller input signal as a pattern.

amplifier An electronic circuit having the capability of amplification and designed specifically for that purpose.

amplitude The maximum value of a voltage or current.

anode The terminal of a polarized device that electrons flow from. For a battery that is supplying current, this is the negative terminal; for a diode, it is the positive terminal.

aperture jitter The uncertainty in the aperture time.

aperture time The time for an analog switch to fully open after the control input changes from the sample level to the hold level.

apparent power (P_a) The product of the voltage times the current, expressed in volt-amperes (VA). In a purely resistive circuit it is the same as the true power.

apparent power rating The method of rating transformers in which the power capability is expressed in volt-amperes (VA).

armature The power-producing coil in an alternator, generator or motor. In dc generators, the armature is the rotor, but in alternators it can be either the rotor or the stator. In motors, the armature is the rotor.

atom The smallest particle of an element possessing the unique characteristics of that element.

atomic number The number of protons in the nucleus of an atom.

attenuation A gain less than unity.

autotransformer A transformer in which the primary and secondary windings are in a single winding.

average value (1) The average value of a sine wave determined over one half-cycle as 0.637 times the peak value. (2) The average value of a pulse waveform is equal to its baseline value plus the product of its duty cycle and its amplitude.

averaging amplifier An amplifier with several inputs that produces an output voltage that is the mathematical average of the input voltages.

AWG (American wire gauge) A standardization based on wire diameter.

back emf (electromotive force) A voltage developed across a spinning armature that opposes the original applied voltage.

balanced bridge A bridge circuit that is in the balanced state as indicated by zero volts across the bridge.

balun A type of transformer used to convert a balanced line (such as twisted pair wiring) to an unbalanced line (such as coaxial cable) or vice-versa.

band-pass filter A resonant circuit that passes a range of frequencies lying between two cutoff frequencies and rejects frequencies above and below the range.

band-stop filter A resonant circuit that rejects a range of frequencies lying between two cutoff frequencies and passes frequencies above and below the range.

bandwidth (BW) The characteristic of certain electronic circuits that specifies the usable range of frequencies for which signals pass from input to output without significant reduction in amplitude.

barrier potential The amount of voltage required to move electrons through the depletion region of a *pn* junction diode.

base One of the semiconductor regions in a bipolar junction transistor.

baseline The normal level of a pulse waveform; the voltage level in the absence of a pulse.

battery An energy source that uses a chemical reaction to convert chemical energy into electrical energy.

beta (β) The ratio of collector current to base current in a bipolar junction transistor.

bias The application of a dc voltage to a diode or other electronic device to produce a desired mode of operation.

www.EngineeringBooksPdf.com

bipolar Characterized by two *pn* junctions.

bipolar junction transistor (BJT) A transistor constructed with three doped semiconductor regions separated by two *pn* junctions.

bleeder current The current left after the total load current is subtracted from the total current into the circuit.

branch One current path in a parallel circuit.

bridge rectifier A type of full-wave rectifier consisting of diodes arranged in a four-cornered configuration.

bypass A capacitor connected from a point to ground to remove the ac signal without affecting the dc voltage. A special case of decoupling.

CAM Configurable analog module; a predesigned analog circuit for which some of its parameters can be selectively programmed.

capacitance The ability of a capacitor to store electrical charge.

capacitive reactance The opposition of a capacitor to sinusoidal current. The unit is the ohm (Ω).

capacitive susceptance (B_C) The ability of a capacitor to permit current; the reciprocal of capacitive reactance. The unit is the siemens (S).

capacitor An electrical device consisting of two conductive plates separated by an insulating material and possessing the property of capacitance.

capacitor-input filter A power supply filter that uses a capacitor from the rectifier output to ground to eliminate most of the variation in the rectifier output voltage.

cathode The terminal of a polarized device that electrons flow to. For a battery that is supplying current, this is the positive terminal; for a diode, it is the negative terminal.

center tap (CT) A connection at the midpoint of the secondary winding of a transformer.

charge An electrical property of matter that exists because of an excess or a deficiency of electrons. Charge can be either positive or negative.

charging For a capacitor, the process in which a current removes charge from one plate of a capacitor and deposits it on the other plate, making one plate more positive than the other.

choke An inductor. The term is used more commonly in connection with inductors used to block or choke off high frequencies.

circuit An interconnection of electrical components designed to produce a desired result. A basic circuit consists of a source, a load, and an interconnecting current path.

circuit breaker A resettable protective device used for interrupting excessive current in an electric circuit.

circular mil (CM) The unit of the cross-sectional area of a wire.

clamper A circuit that adds a dc level to an ac signal; a dc restorer.

class A amplifier An amplifier circuit that conducts for the entire input cycle and produces an output signal that is a replica of the input signal in terms of its waveshape.

class B amplifier An amplifier circuit that conducts for half of the input cycle.

closed circuit A circuit with a complete current path.

closed loop voltage gain (A_{cl}) The overall voltage gain of an op-amp with negative feedback.

coefficient of coupling (k) A constant associated with transformers that is the ratio of secondary magnetic flux to primary magnetic flux. The ideal value of 1 indicates that all the flux in the primary winding is coupled into the secondary winding.

coil A common term for an inductor.

cold junction A reference thermocouple held at a fixed temperature and used for compensation in a thermocouple circuit.

collector One of the semiconductor regions in a BJT.

color code A system of color bands or dots that identify the value of a resistor or other component.

common A reference point in a circuit; also called *reference ground*.

common base (CB) A BJT amplifier configuration in which the base is the common (grounded) terminal.

common-collector (CC) A BJT amplifier configuration in which the collector is the common (grounded) terminal.

common-drain (CD) A FET amplifier configuration in which the drain is the common terminal.

common-emitter (CE) A BJT amplifier configuration in which the emitter is the common (grounded) terminal.

common mode A condition characterized by the presence of identical signals on both op-amp inputs.

common-mode rejection ratio (CMRR) A measure of a diff-amp's or an op-amp's ability to reject signals that appear the same on both inputs; the ratio of differential voltage gain or open-loop gain (for an op-amp) to common-mode gain.

common-mode signals Signals that appear the same on both inputs of an op-amp.

common-source (CS) A FET amplifier configuration in which the source is the common terminal.

comparator A circuit that compares two input voltages and produces an output in either of two states indicating the greater or less than relationship of the inputs.

conductance (G) The ability of a circuit to allow current; the reciprocal of resistance. The unit is the siemens (S).

conductor A material in which electrical current is established with relative ease. An example is copper.

conversion time The time it takes for an ADC to convert an analog voltage sample to a digital code.

core The structure around which the winding of an inductor is formed. The core material influences the electromagnetic characteristics of the inductor.

coulomb (C) The unit of electrical charge; the total charge possessed by 6.25×10^{18} electrons.

Coulomb's law A law that states a force exists between two charged bodies that is directly proportional to the product of the two charges and inversely proportional to the square of the distance between them.

coupling The method of connecting a capacitor from between two points in a circuit to allow ac to pass from one point to the other while blocking dc.

covalent Related to the bonding of two or more atoms by the interaction of their valence electrons.

crystal The pattern or arrangement of atoms forming a solid material.

www.EngineeringBooksPdf.com

current The rate of flow of charge (free electrons).

current divider A parallel circuit in which the total current divides among the branches.

current gain The ratio of output current to input current.

current source A device that produces a constant current for a varying load.

cutoff The nonconducting state of a transistor.

cutoff frequency (f_c) The frequency at which the output voltage of a filter is 70.7% of the maximum output voltage.

cycle One repetition of a periodic waveform.

dc component The average value of a pulse waveform.

dc power supply An electronic instrument that produces voltage, current, and power from the ac power line or batteries in a form suitable for use in powering electronic equipment.

decade A tenfold change in the value of a quantity. When a quantity becomes ten times less or ten times greater, it has changed a decade.

decibel (dB) A unit of logarithmic expression ten times the logarithm of the ratio of two powers or twenty times the logarithm of the ratio of two voltages measured across equal resistances.

decoupling The method of connecting a capacitor from one point, usually the dc power supply line, to ground to short ac to ground without affecting the dc voltage.

degree The unit of angular measure corresponding to 1/360 of a complete revolution.

depletion mode The condition in a FET when the channel is depleted of majority carriers.

development software A software that is used for entering a circuit design on the computer, simulating the design, and downloading the design to the FPAA device.

dielectric The insulating material between the plates of a capacitor.

dielectric constant A measure of the ability of a dielectric material to establish an electric field.

dielectric strength A measure of the ability of a dielectric material to withstand voltage without breaking down.

differential amplifier An amplifier that produces an output proportional to the difference of two inputs.

differential mode A mode of op-amp operation in which two opposite polarity signal voltages are applied to two inputs.

differentiator A circuit that produces an inverted output that approaches the mathematical derivative of the input, which is the rate of change.

diode An electronic device that permits current in only one direction.

discrete device An individual electrical or electronic component that must be used in combination with other components to form a complete functional circuit.

DMM Digital multimeter; an electronic instrument that combines meters for the measurement of voltage, current, and resistance.

doping The process of imparting impurities to an intrinsic semiconductive material in order to control its conduction characteristics.

downloading The process of implementing the software description of a circuit in an FPAA.

drain One of the three terminals of a field-effect transistor.

droop In a sample-and-hold circuit, the change in the sampled value during the hold time.

duty cycle A characteristic of a pulse waveform that indicates the percentage of time that a pulse is present during a cycle; the ratio of pulse width to period.

effective value A measure of the heating effect of a sine wave; also known as the *rms* (root mean square) *value.*

efficiency The ratio of the output power to the input power of a circuit, usually expressed as a percentage.

electrical Related to the use of electrical voltage and current to achieve desired results.

electrical isolation The condition in which two circuits have no common conductive path between them.

electrical shock The physical sensation resulting from current through the body.

electromagnetic field A formation of a group of magnetic lines of force surrounding a conductor created by electrical current in the conductor.

electromagnetic induction The phenomenon or process by which a voltage is produced in a conductor when there is relative motion between the conductor and a magnetic or electromagnetic field.

electromagnetism The production of a magnetic field by current in a conductor.

electron A basic particle of electrical charge in matter. The electron possesses negative charge.

electronic Related to the movement and control of free electrons in semiconductors or vacuum devices.

element One of the unique substances that make up the known universe. Each element is characterized by a unique atomic structure.

emitter One of the three semiconductor regions in a BJT.

emitter-follower A popular term for a common-collector amplifier.

energy The ability to do work. The unit is the joule (J).

engineering notation A system for representing any number as a one-, two-, or three-digit number times a power of ten with an exponent that is a multiple of 3.

enhancement mode The condition of a MOSFET when the channel has an abundance of majority carriers.

error The difference between the true or best-accepted value of some quantity and the measured value.

exciter A separate dc generator used supply current to the field coils of a large generator or alternator. Normally, excitation current is controlled automatically.

exponent The number to which a base number is raised.

exponential A mathematical function described by a natural logarithm (base). Increasing and decreasing current and voltage for a capacitor or inductor are described by exponential functions.

www.EngineeringBooksPdf.com

falling edge The negative-going transition of a pulse.

fall time (t_f) The time interval required for a pulse to change from 90% to 10% of its amplitude.

farad (F) The unit of capacitance.

Faraday's law A law stating that the voltage induced across a coil of wire equals the number of turns in the coil times the rate of change of the magnetic flux.

feedback The process of returning a portion of a circuit's output signal to the input in such a way as to create certain specified operating conditions.

feedthrough The component of the output voltage that follows the input signal after the analog switch is opened.

field-effect transistor (FET) A type of transistor that uses an induced electric field within its structure to control current.

filter A type of circuit that passes certain frequencies and rejects all others.

flash A method of analog-to-digital conversion.

forward bias The condition in which a diode conducts current.

FPAA Field-programmable analog array; an integrated circuit that can be programmed for implementation of an analog circuit design.

free electron A valence electron that has broken away from its parent atom and is free to move from atom to atom within the atomic structure of a material.

frequency A measure of the rate of change of a periodic function; the number of cycles completed in 1 s. The unit of frequency is the hertz.

frequency response In electrical circuits, the variation in the output voltage (or current) over a specified range of frequencies.

fuel cell A device that converts electrochemical energy from an external source into dc voltage. The hydrogen fuel cell is the most common type.

full-wave rectifier A circuit that converts an alternating sine wave into a pulsating dc consisting of both halves of a sine wave for each input cycle.

function generator An instrument that produces more than one type of waveform.

fundamental frequency The repetition rate of a waveform.

fuse A protective device that burns open when there is excessive current in a circuit.

gain The amount by which an electrical signal is increased or decreased; the ratio of output to input; the amount of amplification.

gate One of the three terminals of a FET.

gauge factor The ratio of the fractional change in resistance to the fractional change in length along the axis of the gauge.

gauss A CGS unit of flux density.

generator An energy source that produces electrical signals.

germanium A semiconductive material.

ground The common or reference point in a circuit.

ground plane A conducting surface used as a reference point for circuit returns or in antenna systems to image a radiating structure.

half-power frequency The frequency at which the output power of a filter is 50% of the maximum (the output voltage is 70.7% of maximum); another name for *critical* frequency or *cutoff* frequency.

half-splitting A troubleshooting procedure where one starts in the middle of a circuit or system and, depending on the first measurement, works toward the output or toward the input to find the fault.

half-wave rectifier A circuit that converts an alternating sine wave into a pulsating dc consisting of one-half of a sine wave for each input cycle.

Hall effect A change in current density across a conductor or semiconductor when current in the material is perpendicular to a magnetic field. The change in current density produces a small transverse voltage in the material, called the Hall voltage.

harmonics The frequencies contained in a composite waveform, which are integer multiples of the repetition frequency (fundamental).

henry (H) The unit of inductance.

hertz (Hz) The unit of frequency. One hertz equals one cycle per second.

high-pass circuit A certain type of circuit whereby higher frequencies are passed and lower frequencies are rejected.

hole The absence of an electron in the valence band of an atom.

hypotenuse The longest side of a right triangle.

hysteresis A characteristic of a magnetic material whereby a change in magnetization lags the application of a magnetic force.

I_{DSS} The drain current in a FET when $V_{GS} = 0$ V.

I_{GSS} The gate reverse current in a FET, which is measured when it is reverse-biased.

impedance (Z) The total opposition to sinusoidal current expressed in ohms.

impedance matching A technique used to match a load resistance to an internal source resistance in order to achieve a maximum transfer of power.

induced current (i_{ind}) A current induced in a conductor as a result of a changing magnetic field.

induced voltage (v_{ind}) Voltage produced as a result of a changing magnetic field.

inductance (L) The property of an inductor that produces an opposition to any change in current.

induction motor An ac motor that achieves excitation to the rotor by transformer action.

inductive reactance (X_L) The opposition of an inductor to sinusoidal current. The unit is the ohm.

inductive susceptance (B_L) The ability of an inductor to permit current; the reciprocal of inductive reactance. The unit is the siemens.

inductor A passive electrical component formed by a coil of wire and which exhibits the property of inductance.

input The voltage, current, or power applied to an electrical circuit to produce a desired result.

instantaneous power The value of power in a circuit at any given instant of time.

instantaneous value The voltage or current value of a waveform at a given instant in time.

www.EngineeringBooksPdf.com

instrumentation amplifier An amplifier specially designed for amplifying small differential signals and rejecting large common-mode voltages.

insulator A material that does not allow current under normal conditions.

integrated circuit (IC) A type of circuit in which all the components are constructed on a single tiny chip of silicon.

integrator A circuit that produces an output that approaches the mathematical integral of the input.

interface To make the output of one type of circuit compatible with the input of another so that they can operate properly together.

intrinsic The pure or natural state of a material.

intrinsic semiconductor A pure semiconductive material with relatively few free electrons.

inverting amplifier An op-amp closed-loop configuration in which the input signal is applied to the inverting input.

ion An atom or group of atoms with a net charge.

isolation amplifier An amplifier with electrically isolated internal stages.

JFET Junction field-effect transistor; a type of FET that operates with a reverse-biased junction to control current in a channel.

joule (J) The SI unit of energy.

kilowatt-hour (kWh) A large unit of energy used mainly by utility companies.

Kirchhoff's current law A law stating that the total current into a node equals the total current out of the node.

Kirchhoff's voltage law A law stating that (1) the sum of the voltage drops around a single closed loop (path) equals the source voltage in that loop or (2) the algebraic sum of all the voltages around a single closed path in a circuit is zero.

ladder diagram An electrical schematic of a parallel circuit which resembles a ladder. Two rails represent the two nodes that have the applied voltage; any number of "rungs", which are loads, complete the ladder.

ladder logic A graphical computer language used for programming PLCs. Programming is accomplished by placing simulated relays, contacts, switches, timers, and other control elements in "rungs" to allow the PLC to control an industrial process.

lag To be behind; describes a condition of the phase or time relationship of waveforms in which one waveform is behind the other in phase or time.

lead To be ahead; describes a condition of the phase or time relationship of waveforms in which one waveform is ahead of the other in phase or time; also, a wire or cable connection to a device or instrument.

leading edge The first step or transition of a pulse.

LED (light-emitting diode) A type of diode that emits light when there is forward current.

Lenz's law A law that states when the current through a coil changes, the polarity of the induced voltage created by the changing magnetic field is such that it always opposes the change that caused it. The current cannot change instantaneously.

limiter A circuit that removes part of a waveform above or below a specified level; a clipper.

linear Characterized by a straight-line relationship.

line regulation The change in output voltage for a given change in line (input) voltage, normally expressed as a percentage.

lines of force Magnetic flux lines that exist in a magnetic field radiating from the north pole to the south pole.

load An element (resistor or other component) connected across the output terminals of a circuit that draws current from the source and upon which work is done.

load cell A transducer that uses strain gauges to convert mechanical force into an electrical signal.

load current The output current of a circuit supplied to a load.

loading The effect on a circuit when an element that draws current from the circuit is connected across the output terminals.

load regulation The change in output voltage for a given change in load current, normally expressed as a percentage.

low-pass circuit A certain type of circuit in which lower frequencies are passed and higher frequencies are rejected.

magnetic coupling The magnetic connection between two coils as a result of the changing magnetic flux lines of one coil cutting through the second coil.

magnetic field A force field radiating from the north pole to the south pole of a magnet.

magnetic field intensity The amount of mmf per unit length of magnetic material. The unit is the ampere-turns/meter (At/m); also called *magnetizing force*.

magnetic flux The lines of force between the north and south poles of a permanent magnet or an electromagnet.

magnetic flux density The number of lines of force per unit area perpendicular to a magnetic field.

magnetomotive force The cause of a magnetic field; measured in ampere-turns.

magnitude The value of a quantity, such as the number of volts of voltage or the number of amperes of current.

majority carrier The most numerous charge carrier in a doped semiconductive material (either free electrons or holes.)

maximum power transfer The condition, when the load resistance equals the source resistance, under which maximum power is transferred from source to load.

maximum power transfer theorem A theorem that states the maximum power is transferred from a source to a load when the load resistance equals the internal source resistance.

metric prefix A symbol that is used to replace the power of ten in numbers expressed in engineering notation.

microcontroller A specialized microprocessor designed for control functions.

minority carrier The least numerous charge carrier in a doped semiconductive material (either free electrons or holes).

modulation The process in which a signal containing information is used to modify a characteristic of another signal such as amplitude, frequency, or pulse width so that the information on the first is also contained on the second.

www.EngineeringBooksPdf.com

MOSFET Metal-oxide semiconductor field-effect transistor.

multimeter An instrument that measures voltage, current, and resistance.

mutual inductance (L_M) The inductance between two separate coils, such as in a transformer.

negative feedback The return of a portion of the output signal to the input such that it is out of phase with the input signal.

negative ion An atom or group of atoms with a net negative charge.

neutron An atomic particle having no electrical charge.

node A point or junction in a circuit at which two or more components are connected.

noninverting amplifier An op-amp closed-loop configuration in which the input signal is applied to the noninverting input.

nucleus The central part of an atom containing protons and neutrons.

Nyquist rate In sampling theory, the minimum rate at which an analog signal can be sampled for analog-to-digital conversion.

ohm (Ω) The unit of resistance.

ohmmeter An instrument for measuring resistance.

Ohm's law A law stating that current is directly proportional to voltage and inversely proportional to resistance.

open A circuit condition in which the current path is interrupted.

open circuit A circuit in which there is not a complete current path.

open-loop gain (A_{ol}) The internal voltage gain of an op-amp without feedback.

operational amplifier (op-amp) A special type of amplifier exhibiting very high open-loop gain, very high input resistance, very low output resistance, and good rejection of common-mode signals.

operational transconductance amplifier (OTA) A voltage-to-current amplifier in which the gain is set by a bias current.

orbit The path an electron takes as it circles around the nucleus of an atom.

oscillator A circuit that produces a repetitive waveform on its output with only the dc supply voltage as an input.

oscilloscope A measurement instrument that displays signal waveforms on a screen.

parallel The relationship between two circuit components that exists when they are connected between the same pair of nodes.

parallel resonance In a parallel *RLC* circuit, the condition where the impedance is maximum and the reactances are equal.

passband The range of frequencies passed by a filter.

peak-to-peak value The voltage or current value of a waveform measured from its minimum to its maximum points.

peak value The voltage or current value of a waveform at its maximum positive or negative points.

pentavalent Describes an atom with five valence electrons.

period (T) The time interval of one complete cycle of a given sine wave or any periodic waveform.

periodic Characterized by a repetition at fixed time intervals.

permeability The measure of ease with which a magnetic field can be established in a material.

phase The relative displacement of a time-varying waveform in terms of its occurrence with respect to a reference.

phase angle The angle between the source voltage and the total current in a reactive circuit.

phasor A representation of a sine wave in terms of both magnitude and phase angle.

photoconductive cell A type of variable resistor that is light-sensitive.

photodiode A diode whose reverse resistance changes with incident light.

photon A discrete bundle of electromagnetic energy. In a vacuum, photons travel at the speed of light and have no rest mass.

photovoltaic effect The process whereby light energy is converted directly into electrical energy.

piezoelectric effect The property of a crystal whereby a changing mechanical stress produces a voltage across the crystal.

PIV (peak inverse voltage) The maximum value of reverse voltage which occurs at the peak of the input cycle when the diode is reverse-biased.

***PN* junction** The boundary between *n*-type and *p*-type semiconductive materials.

pole In practical terms, a single *RC* circuit in a filter or amplifier that causes the response to change at a 20 dB per decade rate above or below a certain frequency.

positive feedback The return of a portion of the output signal to the input such that it is in phase with the input signal.

positive ion An atom or group of atoms with a net positive charge.

potentiometer A three-terminal variable resistor.

power The rate of energy usage. The unit is the watt (W).

power factor The relationship between volt-amperes and true power or watts. Volt-amperes multiplied by the power factor equals true power.

power gain The ratio of output power to input power; the product of voltage gain and current gain.

power of ten A numerical representation consisting of a base of 10 and an exponent; the number 10 raised to a power.

power rating The maximum amount of power that a resistor can dissipate without being damaged by excessive heat buildup.

power supply A device that converts the ac utility voltage into a constant dc.

precision A measure of the repeatability (or consistency) of a series of measurements.

primary winding The input winding of a transformer; also called *primary.*

probe An accessory used to connect a voltage to the input of an oscilloscope or other instrument.

www.EngineeringBooksPdf.com

programmable logic controller (PLC) A dedicated computer designed to control industrial processes that use binary control (on-off operations). PLCs are designed to operate in harsh environments, have extensive input and output capability, self-diagnostics, and normally are programmed using a graphical programming language.

proton A positively charged atomic particle.

pulse A type of waveform that consists of two equal and opposite steps in voltage or current separated by a time interval.

pulse repetition frequency The fundamental frequency of a repetitive pulse waveform; the rate at which the pulses repeat expressed in either hertz or pulses per second.

pulse width (t_W) The time interval between the opposite steps of an ideal pulse. For a nonideal pulse, the time between the 50% points on the leading and trailing edges.

push-pull A type of class B amplifier in which one output transistor conducts for one half-cycle and the other conducts for the other half-cycle.

Q-point The dc operating (bias) point of an amplifier.

quality factor (Q) The ratio of reactive power to true power in an inductor or a resonant circuit.

quantization The determination of a value for a changing analog voltage.

quantization error The error resulting from the change in the analog voltage during the conversion of a sampled analog value.

radian A unit of angular measurement. There are 2π radians in one complete revolution. One radian equals 57.3°.

ramp A type of waveform characterized by a linear increase or decrease in voltage or current.

***RC* lag circuit** A phase shift circuit in which the output voltage, taken across the capacitor, lags the input voltage by a specified angle.

***RC* lead circuit** A phase shift circuit in which the output voltage, taken across the resistor, leads the input voltage by a specified angle.

***RC* time constant** A fixed time interval set by the values of R and C that determines the time response of a series RC circuit. It equals the product of the resistance and the capacitance.

reactive power (P_r) The rate at which energy is stored and alternately returned to the source by a capacitor or inductor. The unit is the VAR.

recombination The process of a free electron falling into a hole in the valence band of an atom.

rectifier An electronic circuit that converts ac into pulsating dc; one part of a power supply.

reference ground The metal chassis that houses the assembly or a large conducive area on a printed circuit board used as the common or reference point.

reflected load The load as it appears to the source in the primary of a transformer.

reflected resistance The resistance in the secondary circuit reflected into the primary circuit.

regulated power supply A type of power supply in which the output is automatically adjusted to keep a constant value.

regulator An electronic circuit that maintains an essentially constant output voltage with a changing input voltage or load.

relaxation oscillator A type of oscillator, generally nonsinusoidal, whose operation is based on the charging and discharging of a capacitor.

relay An electromagnetically controlled mechanical device in which electrical contacts are open or closed by a magnetizing current.

reluctance The opposition to the establishment of a magnetic field in a material.

resistance Opposition to current. The unit is the ohm (Ω).

resistor An electrical component designed specifically to have a certain amount of resistance.

resolution The smallest increment of a quantity that a meter can measure; the number of bits involved in an analog-to-digital conversion.

resonant frequency The frequency at which a resonant condition occurs in a series or parallel RLC circuit.

retentivity The ability of a material, once magnetized, to maintain a magnetized state without the presence of a magnetizing force.

reverse bias The condition in which a diode prevents current.

reverse breakdown The condition of a diode in which excessive reverse-bias voltage causes a rapid buildup of reverse current.

RFI Radio frequency interference; high frequencies produced when high values of current and voltage are switched on and off.

rheostat A two-terminal variable resistor.

right triangle A triangle with a 90° angle.

ripple voltage The small variation in the dc voltage on the output of a filtered rectifier caused by the slight charging and discharging action of the filter capacitor.

rise time (t_r) The time interval required for a pulse to change from 10% to 90% of its amplitude.

rising edge The positive-going transition of a pulse.

***RL* lag circuit** A phase shift circuit in which the output voltage, taken across the resistor, lags the input voltage by a specified angle.

***RL* lead circuit** A phase shift circuit in which the output voltage, taken across the inductor, leads the input voltage by a specified angle.

***RL* time constant** A fixed time interval set by the values of R and L that determines the time response of a circuit and is equal to L/R.

rms value The value of a sine wave that indicates its heating effect, also known as the *effective value.* It is equal to 0.707 times the peak value. RMS stands for root mean square.

roll-off The decrease in the response of a filter below or above a critical frequency.

rotor The moving part of a generator, alternator, or motor.

round off The process of dropping one or more digits to the right of the last significant digit in a number.

RTD Resistance temperature detector.

sample-and-hold Describes the process of taking the instantaneous value of a quantity at a specific point in time and storing it on a capacitor.

www.EngineeringBooksPdf.com

saturation The state of a transistor in which the output current is maximum and further increases of the input variable have no effect on the output.

sawtooth waveform A type of electrical waveform composed of ramps; a special case of a triangular waveform in which one ramp is much shorter than the other.

scaling adder A special type of summing amplifier with weighted inputs.

schematic A symbolized diagram of an electrical or electronic circuit.

scientific notation A system for representing any number as a number between 1 and 10 times an appropriate power of ten.

SCR Silicon controlled rectifier; a type of three-terminal thyristor.

secondary winding The output winding of a transformer; also called *secondary.*

Seebeck effect The generation of a voltage at the junction of two different metals that have a temperature difference between them.

selectivity A measure of how effectively a resonant circuit passes certain frequencies and rejects others. The narrower the bandwidth, the greater the selectivity.

self-excited generator A generator in which the field windings derive their current from the output.

semiconductor A material that has a conductance value between that of a conductor and that of an insulator. Silicon and germanium are examples.

sensitivity The ohms-per-volt rating of a voltmeter.

series In an electric circuit, a relationship of components in which the components are connected such that they provide a single current path between two points.

series-aiding An arrangement of two or more series voltage sources with polarities in the same direction.

series-opposing An arrangement of two series voltage sources with polarities in the opposite direction; not a normal configuration.

series regulator A type of voltage regulator in which the control element is in series with the load.

series resonance In a series *RLC* circuit, the condition where the impedance is minimum and the reactances are equal.

shell An energy band in which electrons orbit the nucleus of an atom.

short A circuit condition in which there is a zero or abnormally low resistance between two points; usually an inadvertent condition.

shunt regulator A type of voltage regulator with the control element between the output and ground.

SI Standardized international system of units used for all engineering and scientific work; abbreviation for French *Le Système International d'Unites.*

siemens The unit of conductance.

significant digit A digit known to be correct in a number.

silicon A semiconductive material used in diodes and transistors.

silicon-controlled rectifier (SCR) A device that can be triggered on to conduct current in one direction.

sine wave A type of electrical waveform that is based on the mathematical sine function.

single-ended mode A mode of op-amp operation in which a signal voltage is applied to only one input.

slip The difference between the synchronous speed of the stator field and the rotor speed in an induction motor.

solenoid An electromagnetically controlled device in which the mechanical movement of a shaft or plunger is activated by a magnetizing current.

solenoid valve An electrically controlled valve for control of air, water, steam, oils, refrigerants, and other fluids.

source Any device that produces energy; one of the three terminals of a FET.

speaker An electromagnetic device that converts electrical signals to sound waves.

squirrel cage An aluminum frame within the rotor of an induction motor that forms the electrical conductors for a rotating current.

stator The fixed part of a generator, alternator, or motor.

steady state The equilibrium condition of a circuit that occurs after an initial transient time.

step-down transformer A transformer in which the secondary voltage is less than the primary voltage.

step-up transformer A transformer in which the secondary voltage is greater than the primary voltage.

stiff voltage divider A voltage divider that has a load resistor that is large compared to the resistors in the divider, so that the loaded and unloaded output voltages are nearly the same.

stopband The range of frequencies between the upper and lower cutoff points.

strain The expansion or compression of a material caused by stress forces acting on it.

strain gauge A variable resistor formed by a resistive material in which a lengthening or shortening due to stress produces a proportional change in resistance.

summing amplifier An amplifier with several inputs that produces a negative output voltage proportional to the algebraic sum of the input voltages.

superposition A method for analyzing circuits with two or more sources by examining the effects of each source by itself and then combining the effects.

switch An electrical or electronic device for opening and closing a current path.

synchronous motor An ac motor in which the rotor moves at the same rate as the rotating magnetic field of the stator.

tank circuit A parallel resonant circuit.

tapered Nonlinear, such as a tapered potentiometer.

temperature coefficient A constant specifying the amount of change in the value of a quantity for a given change in temperature.

terminal An external contact point on an electric circuit or an electronic device.

terminal equivalency A condition that occurs when two circuits produce the same load voltage and load current where the same value of load resistance is connected to either circuit.

tesla The SI unit of flux density.

www.EngineeringBooksPdf.com

thermistor A type of variable resistor in which resistance depends on temperature.

thermocouple A type of temperature transducer formed by the junction of two dissimilar metals that produces a voltage proportional to temperature.

Thevenin's theorem A circuit theorem that provides for reducing any two-terminal resistive circuit to a single equivalent voltage source in series with an equivalent resistance.

thyristor A class of four-layer (*pnpn*) semiconductive devices.

time constant A fixed-time interval set by R and C, or R and L values, that determines the time response of a circuit.

tolerance The limits of variation in the value of a component.

trailing edge The second step or transition of a pulse.

transconductance (g_m) The ratio of drain current to gate-to-source voltage in a FET; in an electronic device, the ratio of the output current to the input voltage.

transducer A device that converts a physical parameter into an electrical quantity.

transformer An electrical device constructed of two or more coils (windings) that are electromagnetically coupled to each other to provide a transfer of power from one coil to another.

transient A temporary passing condition in a circuit; a sudden or temporary change in circuit conditions.

transient time An interval equal to approximately five time constants.

transistor A semiconductor device that controls current between two terminals based on the current or voltage at a third terminal and is used for amplification and switching of electrical signals.

triac A 3-terminal thyristor that can conduct current in either direction.

triangular waveform A type of electrical waveform that consists of two ramps.

triangular-wave oscillator An electronic oscillator that uses a comparator with two trip points and an integrator to produce triangular waves.

trigger The activating mechanism of some electronic devices or instruments.

trimmer A small variable capacitor.

trivalent Describes an atom with three valence electrons.

troubleshooting A systematic process of isolating, identifying, and correcting a fault in a circuit or system; the application of logical thinking combined with a thorough knowledge of circuit or system operation to find and correct a malfunction.

true power The power that is dissipated in a circuit, usually in the form of heat.

turns ratio The ratio of turns in the secondary winding to turns in the primary winding.

unbalanced bridge A bridge circuit that is in the unbalanced state as indicated by a voltage across the bridge proportional to the amount of deviation from the balanced state.

unity gain A gain of 1.

valence Related to the outer shell or orbit of an atom.

valence electron An electron that is present in the outermost shell of an atom.

VAR (volt-ampere reactive) The unit of reactive power.

varactor A diode that is used as a voltage-variable capacitor.

$V_{GS(off)}$ The gate-source cutoff voltage for a FET.

volt The unit of voltage or electromotive force.

voltage The amount of energy available to move a certain number of electrons from one point to another in an electric circuit.

voltage divider A circuit consisting of series resistors across which one or more output voltages are taken.

voltage drop The decrease in the voltage across a resistor due to loss of energy.

voltage-follower A closed-loop, noninverting op-amp with a voltage gain of 1.

voltage gain The ratio of output voltage to input voltage.

voltage regulation The process of maintaining an essentially constant output voltage over variations in input voltage or load.

voltage source A device that produces a constant voltage for a varying load.

voltmeter An instrument used to measure voltage.

watt (W) The unit of power.

Watt's law A law that states the relationships of power to current, voltage, and resistance.

waveform The pattern of variations of a voltage or current showing how the quantity changes with time.

weber (Wb) The SI unit of magnetic flux, which represents 10^8 lines.

Wheatstone bridge A 4-legged type of bridge circuit with which an unknown resistance can be accurately measured using the balanced state of the bridge. Deviations in resistance can be measured using the unbalanced state.

Wien-bridge oscillator An electronic oscillator that can produce low distortion sine waves over a wide range of frequencies by using a lead-lag feedback network and stabilized gain.

winding The loops or turns of wire in an inductor.

winding resistance The resistance of the length of wire that makes up a coil.

wiper The sliding contact in a potentiometer.

zener breakdown The lower voltage breakdown in a zener diode.

zener diode A type of diode that operates in reverse breakdown (called zener breakdown) to provide voltage regulation.

zero voltage switching The process of switching power to a load at the zero crossings of an ac voltage to minimize rf noise generation.

www.EngineeringBooksPdf.com

Index

Page references followed by "f" indicate illustrated figures or photographs; followed by "t" indicates a table.

A

ac circuits, 24, 322, 341, 359-360, 386, 391, 397, 429, 432-433, 452, 455, 480, 536, 539, 552, 554
  applications, 24, 341, 433, 452, 455, 554
  average value, 386
  capacitance, 402, 429, 432-433
  frequency, 341, 386, 397, 429, 433, 452, 455, 480, 536, 552
  generator, 341, 359, 386, 397
  inductance, 517, 539, 554
  introduction to, 341, 359-360, 386, 391, 397
  parallel, 402, 429, 432-433, 452, 455, 480, 517, 539
  period, 341, 386, 397
  radians, 386, 391, 397
  resistance, 24, 360, 432-433, 517, 539, 552
  rms values, 359-360
  series, 402, 429, 432-433, 452, 455, 480, 517, 536, 539
  series-parallel, 480
AC equivalent circuit, 782
AC generator, 351, 363, 487, 1040
ac generators, 341-342, 363, 386, 392, 397
AC ground, 501, 782, 789, 802
AC resistance, 737, 782
Accelerometer, 985
Acceptor, 708
accuracy, 1, 11, 13, 17, 58-59, 183, 276, 375, 564, 717-718, 818, 978, 1040
Acquisition time, 986, 988-989, 1007, 1040
Active filter, 877, 897-898, 900-901, 915, 917, 920, 952, 1040
active filters, 490, 877, 897-898, 900, 920, 923
A/D conversion, 991-992, 994
AD622, 928
ADC (analog-to-digital converter), 990
Adder, 877, 881, 884-885, 914-915, 917, 919, 1047
Addition, 4, 8, 33, 50, 53, 58, 77, 90, 97, 145, 182, 254, 269, 305, 342, 365, 369, 379, 580, 708-709, 732, 735, 762, 781-782, 786, 851-852
Address, 262
admittance, 459, 473-476, 479-481, 503-505, 513, 569-574, 591-592, 625-626, 650, 806, 1040
Ah rating, 77, 99, 105, 156, 1040
Alpha, 771, 822, 1040
Alternating current, 60, 97, 341-400, 430, 444
Alternating voltage, 342, 386
Alternation, 342-343, 347-348, 386, 720, 722, 730, 762, 789, 947
Alternator, 341, 351, 363-367, 370, 388, 392, 1040, 1042, 1046-1047
AM (amplitude modulation), 647
  carrier frequency, 647
  envelope, 647
AM broadcast band, 647
AM receiver, 647
AMI, 1029-1031
ammeters, 55, 61, 72-73, 178, 196, 218, 579
Ampere-hour rating, 97, 99-100, 112
amperes, 2, 8, 19, 38, 40, 50, 66-67, 70, 79-80, 82, 86, 91, 99, 105, 109, 210-212, 308, 323, 330, 503, 519, 1044-1045
Amplification, 645, 768-769, 776-777, 786, 819-820, 830, 838, 952, 1040, 1043, 1048
Amplifier, 7, 58, 70, 86, 97, 134, 144-145, 202, 251, 262-263, 289, 402, 439-440, 442, 444, 452, 459, 489-490, 500-502, 510-511, 645-648, 770, 776-782, 784-788, 791-792, 802-811, 813-817, 819-820, 822-823, 825-826, 828-831, 835-875, 879, 881-885, 892-893, 900, 908, 914-915, 917, 927-939, 941, 943, 948, 952-959, 962-963, 975-976, 980-982, 986, 998-999, 1001, 1003-1004, 1030, 1040-1042, 1044-1047
  audio, 58, 144, 262, 646-648
  averaging, 877, 881, 883-885, 914-915, 917, 1040
  class A, 768, 773, 779, 786, 791, 802, 815-816, 819-820, 822-823, 825, 830, 838, 1041
  class B, 768, 786-788, 791, 802, 819-820, 822-823, 826, 831, 838, 1041, 1046
  common-base, 786, 802, 819, 841
  common-collector, 768, 773, 784, 786-787, 802, 820, 823, 1041-1042
  common-drain, 768, 802, 805, 819-820, 1041
  common-emitter, 768, 773, 779, 786, 802, 819-820, 823, 1041
  common-gate, 802, 819
  common-source, 768, 802-804, 806, 819-820, 1041
  complementary, 787
  differential, 835, 837-847, 850, 853-854, 865-868, 873-874, 928-930, 937, 948, 952, 954-956, 981-982, 1041-1042, 1044
  distortion, 787-788, 791, 808-809, 831, 847, 862, 915
  D-MOSFET, 802-804, 819, 828
  emitter-follower, 784-785, 787, 805, 826, 830, 1042
  E-MOSFET, 802-803, 819, 828
  instrumentation amplifier, 927-932, 955-956, 958, 962-963, 975-976, 980, 982, 1004, 1044
  inverting, 835-836, 846, 850-857, 859-860, 862, 864-867, 879, 881, 908, 915, 928, 939, 941, 948, 952, 975, 998-999, 1030, 1044
  isolation, 927, 932-937, 952-958, 963, 973, 1001, 1042, 1044
  large-signal, 847
  linear, 779, 786-787, 792, 817, 822, 835-836, 851-852, 864, 948, 973, 1001, 1044, 1046
  logarithmic, 976, 1042
  noninverting, 808, 835-836, 846, 848, 850, 852-862, 864-867, 874, 879, 908, 915, 928-929, 1045
  op-amp, 807, 835-839, 844-869, 871, 873-875, 877, 879, 881-885, 892-893, 900, 908, 914-915, 927-939, 941, 943, 948, 952-959, 962-963, 975, 986, 1004, 1041-1042, 1044-1045
  operational, 145, 490, 646, 835-875, 927-928, 937-938, 955-957, 959, 963, 1045
  operational transconductance, 927, 937-938, 955-957, 959, 963, 1045
  operational transconductance amplifier (OTA), 927, 937-938, 955-956, 1045
  power, 7, 58, 86, 97, 134, 145, 202, 262-263, 402, 439-440, 452, 459, 489, 510-511, 785-787, 791, 809, 814, 819-820, 822, 826, 829, 837, 842-843, 847, 849, 863-864, 867, 874, 908, 932, 934, 955-957, 963, 1001, 1040-1042, 1044-1047
  push-pull, 786-788, 791, 826, 831, 835, 837-838, 873, 1046
  scaling, 877, 881, 884-885, 914-915, 917, 1047
  small signal, 806, 873, 930, 957, 973
  source-follower, 805
  summing, 877, 881-885, 914-915, 917, 952, 1047
  transformer-coupled, 645, 935, 973
  transistor, 58, 134, 145, 289, 442, 768, 770, 773, 776-777, 780-781, 785, 787-788, 791-792, 807, 810, 814-817, 819-820, 822, 825-826, 831, 835, 845, 860, 868, 908, 914-915, 957, 1040-1042, 1044-1047
  tuned, 645-648, 810-811
  two-stage, 813
  voltage-follower, 835, 852, 854, 857-860, 862, 865-867, 874, 948
Amplitude, 341, 346, 348, 354, 356-358, 370-373, 376-378, 384-388, 392, 394, 396, 398, 430, 442, 467, 483-484, 502, 536-537, 569, 612, 617, 620-621, 623, 647-648, 661-662, 664-665, 678, 680-681, 696-699, 721, 763, 809, 823, 830, 841-843, 862, 878, 887, 895-896, 933-934, 941-942, 957, 963, 990, 1030-1031, 1043-1044
Amplitude modulation, 647, 933-934, 960
Analog, 54-56, 58-61, 69-70, 107, 119, 149-150, 156, 178, 208, 247-248, 277, 311, 314, 375, 377-378, 383, 398, 750, 817-818, 881, 986-993, 1000-1001, 1003, 1005, 1007-1008, 1023-1031, 1036, 1040-1041, 1045-1046
Analog multimeter, 56, 60-61, 69-70, 150, 247-248, 277
Analog multiplexer, 1003
Analog oscilloscope, 378, 383
Analog signal, 968, 986, 990-992, 1000-1001, 1003, 1007, 1029
Analog-to-digital converter, 119, 156, 377-378, 817-818, 968, 986, 989-990, 1000-1001, 1003, 1025
Analog-to-digital converter (ADC), 377-378, 986, 989-990, 1000, 1003
AND gate, 818, 822, 831, 994
Angle, 59, 305, 325, 351, 353-358, 386, 389, 391, 459-471, 473-474, 476-490, 503-505, 507-511, 513, 557-570, 572-577, 579-581, 590-592, 594-595, 598-599, 603-607, 609, 616, 625-628, 636, 649-652, 656, 850, 996, 1045-1046
Angular measurement, 341, 351-353, 355, 387, 391, 1046
Anode, 32-34, 413, 716-717, 724-725, 762, 994-996, 1040
Anode current interruption, 995
Antenna, 645-648, 1043
Antimony, 708-709, 756, 764
Aperture jitter, 986, 988-989, 1040
Aperture time, 986, 988-989, 1003, 1007, 1040
Apparent power, 459, 485-489, 503-505, 510-512, 578-580, 590, 592-593, 596
  capacitor, 485-486, 503, 505, 510-512, 580
  total, 485-489, 503-505, 511, 578-580, 590, 592, 596
applications, 1-2, 27-28, 34, 36, 41, 47, 50, 52, 77, 86-87, 97, 144-145, 182, 185-186, 251, 262, 304-305, 310-311, 332, 365-367, 369, 377, 411, 413, 433, 452, 455, 489, 514, 517-520, 543, 554, 596, 599, 617, 644-645, 647, 656, 699, 703-765, 767-833, 845-846, 850-851, 930-932, 950-951, 955-957, 973, 1001, 1035, 1037
  electronic circuits, 2, 97, 229, 728-729, 994, 997
  electronic systems, 97, 489, 603, 728
Arbitrary waveform generator, 346-347
Arctangent, 462
Arsenic, 708
ASCII, 1031
Assembler, 798
Atom, 24-30, 37, 64-67, 72, 704-705, 708-709, 711, 714, 753, 756, 762, 1040, 1043-1048
Atomic number, 25-26, 28, 66, 72, 1040
atoms, 24-30, 35, 40, 72, 115, 299, 703-709, 755, 762, 1044-1045
Attenuation, 381, 490, 807-810, 823, 829, 831, 853, 856, 858, 867, 891-892, 916, 957, 984, 1040
Audio, 58, 144, 262, 313-314, 646-648, 913
Audio amplifier, 58, 144
Automotive application, 186
Autotransformer, 1040
Avalanche breakdown, 735-736, 752
Avalanche effect, 714
Average value, 347, 350, 363, 372, 374, 376, 386, 388-389, 393-394, 583, 667-668, 670, 675, 677, 700, 719-722, 728, 754, 758, 791, 957,

www.EngineeringBooksPdf.com

1040, 1042
Averaging amplifier, 877, 881, 883-885, 914-915, 917, 1040
AWG (American wire gauge), 52-53, 118, 1040

B

Back emf, 328, 330-331, 336, 340, 369, 1040
Balanced bridge, 229, 249-251, 253, 276, 281, 1003, 1040
Balun, 1040
band frequencies, 619
Bandwidth, 459, 493, 503, 506, 510, 583, 593, 617-620, 622, 624-625, 632, 638-641, 643-645, 647-651, 653-654, 656, 849, 851, 865-866, 873, 901, 904-905, 931-932, 958, 1040, 1047
  parallel resonant circuits, 638, 647
Bar graph, 55, 58
Barrier potential, 703, 710-712, 714-718, 721, 753-757, 762, 771, 831, 1040
Base, 2, 17, 42, 145, 380, 424, 445, 592, 768-782, 784-788, 792-794, 815-822, 824-825, 829-831, 833, 840-841, 845, 868, 908-910, 940, 1040-1042, 1045
  numbers, 2, 17, 940
  time, 380, 424, 445, 592, 788, 1040-1042, 1045
Base bias, 771, 776, 787
Base current, 771, 773-774, 776-777, 779, 792-794, 802, 821-822, 824, 831, 910, 1040
Base voltage, 771-772, 777, 788, 815, 820, 831
Base-collector junction, 769, 774-776, 782, 792, 829, 831, 833
Base-emitter junction, 769, 771, 774, 777, 792, 816, 822, 830-831, 910, 940
batteries, 32-34, 37, 62, 64, 77, 92, 97, 99, 105, 110, 112, 115, 132-134, 145, 158-159, 163, 167, 413, 753, 1040, 1042
  cells, 32-34, 37, 64, 145
  lead-acid, 32, 34
Battery, 24, 32-35, 48-49, 56, 58, 62, 64, 66-67, 72, 75, 80, 86, 92, 95-97, 99-100, 105, 108, 111-113, 119, 127, 131-134, 139, 148, 156-157, 159, 188, 190, 195, 203, 273, 275, 288, 332-333, 403, 406, 411, 448, 523, 549-550, 717, 737, 1040-1041
Battery charger, 67
Beta, 771, 777, 820, 822, 1040
  dc, 771, 777, 820, 1040
B-H curve, 317, 319
Bias, 134, 145, 440, 442, 494, 502, 703, 710-718, 736, 738-739, 741, 752-757, 762, 764, 768-771, 773, 776-777, 779, 784, 787-788, 791, 794, 798, 800-803, 815, 817, 819-821, 825, 830, 839-840, 845-846, 865-866, 869, 878, 893, 923, 931, 937-943, 955-957, 959, 963, 1045-1046
  base, 145, 768-771, 773, 776-777, 779, 782, 784, 787-788, 794, 802, 815, 817, 819-821, 825, 830, 840, 845, 910, 940, 1040
  BJT, 768-770, 773, 784, 794, 802, 819-820, 825, 830
  clamper, 955, 957
  diode, 703, 710-718, 736, 738-739, 741, 752-757, 762, 764, 788, 940, 955-957, 963, 1040, 1043, 1045-1046
  drain-feedback, 800-801
  emitter, 752, 768-771, 773, 776-777, 779, 782, 784, 787-788, 802, 815, 817, 819-821, 830, 839-840, 845, 910, 940, 1040
  forward, 703, 710-713, 715-718, 736, 739, 752-757, 762, 764, 770, 773, 776-777, 802, 830, 840, 893, 1043
  forward-reverse, 770, 773, 830
  JFET, 768, 794, 798, 801-803, 819-821, 893
  LED, 703, 739, 741, 752-753
  reverse, 703, 710, 712-718, 736, 738-739, 741, 752-757, 762, 770, 773, 782, 794, 798, 802, 819-820, 830, 1043, 1045-1046
  self, 755, 794, 798, 802, 821, 956, 963
  voltage-divider, 442, 494, 771, 773, 777, 784, 794, 801, 803, 830
  zero, 494, 713, 715, 717, 754, 776, 782, 788, 794, 800, 803, 840, 845-846, 866, 873, 878, 893, 957
Bias current, 771, 845-846, 850, 865-866, 869, 873, 878, 923, 937-943, 955-957, 963, 1045
Bias voltage, 134, 440, 442, 494, 502, 712-717, 738-739, 753, 755, 771, 787, 821, 839-840, 939-940, 955, 963, 1046
Biasing, 289, 703, 710-711, 728, 769-770, 788, 791, 794, 798, 800-801, 805, 816, 818
  BJTs, 769
  FETs, 794, 798
Binary, 315-316, 441, 930, 989-993, 1046
  data, 315-316, 441, 989
  digit, 1046
  information, 441
  number, 990, 992-993, 1046
  point, 441, 991-992, 1046
Bipolar, 768-770, 773, 794, 802, 805, 818-820, 822-823, 830, 1040-1041
Bipolar junction transistor (BJT), 768-769, 794, 818-819, 1041
Bit, 199-200, 213, 232, 266-268, 315-316, 990, 993, 1029
Bleeder current, 229, 242, 244-246, 276, 1041
Bode plotter, 614, 643-644
Body resistance, 15, 153
Bohr model, 25
Bonding diagram, 705-706
Boron, 304, 708-709, 756, 764
Branch, 126, 178-180, 182, 185, 187-191, 193-201, 203-207, 213-215, 218, 220, 225-227, 230, 236-238, 244, 265, 269, 275, 278, 280, 286-287, 292, 453, 477, 480, 509, 573-574, 576-577, 585, 592, 595-596, 627-628, 630-632, 635, 654-655, 812, 1041
Breadboard, 691, 1035-1037
Breakdown, 406-409, 411, 444, 703, 710, 714-716, 719, 735-737, 742, 752-754, 756, 774-775, 948, 999, 1048
  avalanche, 714, 735-736, 752
  zener, 703, 714, 735-737, 742, 752-754, 756, 948, 977, 1048
Breakdown region, 735-736, 742, 775
breakdown voltage, 406-409, 444, 715-716, 719, 735-736, 806, 977, 999
bridge network, 281
Bridge rectifier, 703, 726-728, 746, 748, 752-754, 756, 759, 763, 913, 1041
Broadcast band, 647-648
Brush, 329-330, 364, 388
Buffer, 784, 854, 940, 999
Burst, 383, 395, 691
Bus, 54
Bypass capacitor, 440-441, 452, 779-782, 786, 802, 815, 823, 830-831, 833

C

Calculator solution, 184
calculators, 5, 183-184, 351, 356, 462
Candela, 8
Capacitance, 8, 321, 381, 402-421, 423, 429-433, 437, 439-442, 444-451, 454, 459-460, 485, 494, 518, 520-521, 523, 525, 651, 712-713, 719, 738-739, 742, 753-754, 759, 763, 798, 811, 821, 890, 984, 1041, 1043
  input, 381, 437, 439-440, 442, 444, 459, 494, 719, 742, 753-754, 759, 763, 798, 821, 890, 989, 1041, 1043, 1046
  output, 381, 433, 439-440, 442, 444, 719, 738-739, 742, 753-754, 759, 763, 821, 890, 984, 989, 1041, 1043, 1046
  reverse transfer, 806
  stray, 520-521
  transition, 1043, 1046
  varactor, 413, 712, 738-739, 742, 753-754, 759, 763
Capacitance meter, 414
Capacitive coupling, 933
Capacitive reactance, 402, 429-434, 436, 440-441, 445, 447-448, 452, 460-465, 467, 470, 473-476, 479, 481, 485, 487, 491, 493, 498, 500, 513, 604-606, 1041
Capacitive susceptance, 459, 473-476, 503-504, 513, 625, 1041
Capacitor, 402-437, 439-442, 444-455, 460-461, 465, 467-469, 471, 473-474, 477-478, 480, 485-486, 490-491, 494-500, 502-503, 505, 507, 510-512, 514, 527, 540-541, 544, 553, 558, 583, 608, 633-634, 645, 654, 660-677, 688-694, 698-699, 703, 712, 729-733, 735, 738-739, 744-745, 747-748, 752-754, 759, 763, 779-782, 786, 796, 805, 811-813, 815-816, 825, 830-831, 833, 860, 885-891, 893, 896-897, 917, 923-924, 933-934, 944-945, 949, 984, 1001, 1011-1015, 1036, 1041-1042, 1046
  bypass, 402, 437, 440-441, 445, 452, 779-782, 786, 802, 815, 823, 830-831, 833, 1041
  ceramic, 406-414, 444, 449-450, 1012
  charging, 402-403, 415, 421-425, 430, 439, 441, 444-447, 498, 527, 583, 660-664, 666-667, 671-672, 730-731, 752, 763, 886-889, 896, 923, 949, 1041, 1046
  coupling, 402, 437, 439, 441-442, 444-445, 455, 494, 500, 502, 510-511, 645, 667, 779, 815-816, 823, 833, 933, 1041
  decoupling, 402, 440-441, 445, 455, 823, 1041-1042
  electrolytic, 409, 411-414, 421, 444, 450, 454, 733, 913
  fixed, 409, 414, 423, 430-431, 446, 454, 527, 553, 661-663, 825, 984, 1001, 1041, 1046, 1048
  mica, 406, 408-410, 412-413, 444, 449, 1012
  plastic-film, 409, 411-412, 444
  polarized, 411, 413-414, 454, 1041
  tantalum, 409, 413, 444
  trimmer, 413, 1048
  variable, 407, 409, 413-414, 454, 553, 645, 662, 668, 732-733, 735, 738-739, 753-754, 763, 825, 1007, 1013, 1046
Capacitor charging, 763, 887
Capacitor filter, 439, 730
Capacitor labeling, 409, 414
capacitors, 16, 401-457, 459, 490, 511, 533, 538, 543-544, 645-647, 655-656, 677, 691, 728, 732, 756, 773, 779-780, 789, 811, 831, 848, 913, 933-935, 1012
  electric field, 402, 406, 408, 435, 444-445, 756
  in series, 415-418, 422, 431-432, 444, 447-448, 450, 544, 811
  instantaneous values, 424, 533
  labeling, 409, 414
  measurement, 409, 414, 442-444
  standard values, 691
  transients, 440, 455
  types, 402, 407, 409, 411, 413-414, 421, 437, 440-442, 449-450, 454, 459, 490, 543-544, 645, 779, 811, 831
Capacity, 33-34, 97, 99, 105, 408, 454, 1040
Carbon, 33-34, 41-42, 67, 103-104, 307
Carbon-composition resistor, 41
Carrier, 647, 703, 713-714, 739, 752-753, 762, 836, 1044
Carrier frequency, 647
Carry, 28, 54, 111, 414, 544
Cathode, 32-34, 377, 413, 716, 724-725, 944, 994-995, 1041
Cell, 24, 32-35, 48, 62, 65-67, 72-73, 85-86, 99, 111, 134, 145, 253-254, 291, 863, 951, 1027, 1030, 1043-1045
cells, 32-35, 37, 47, 64, 145, 253-254, 704
  fuel, 34-35, 37, 64
  photoconductive, 47
  primary, 33-34
  secondary, 34
  solar, 35, 704
Center frequency, 904, 916, 921
Center tap, 723, 1041
Center-tapped full-wave rectifier, 723, 725, 764
Center-tapped rectifier, 746, 754, 756, 758
Center-tapped transformer, 723, 758
CGS (centimeter-gram-second), 302
CGS system, 8
Channel, 202, 378-380, 384-385, 395, 440, 442-444, 483, 501-502, 544, 715, 794-803, 819-823, 827-828, 831, 833, 913, 973, 982, 1042, 1044
Characteristic curve, 38-39, 715, 717-718, 735-737, 757, 774, 995
  collector, 774
  ideal, 38, 717, 737
Charge, 8, 16, 24-32, 34, 37-38, 40, 64-67, 72, 96, 299, 402-407, 413, 415, 419, 421-430, 435, 437, 439, 444-452, 454, 496, 660-666, 672-674, 685-686, 689, 692-694, 698, 700, 708, 710-711, 730, 753, 770, 798, 886, 893, 897, 944-945, 949, 1041-1042, 1044-1045
Charge carrier, 753, 1044
chassis ground, 54
Chemical stability, 705
Chip, 41-42, 410-411, 740, 753, 835-836, 1028
Chip resistor, 41-42
Choke, 517-518, 543-544, 554, 1041
  RF, 544, 554

www.EngineeringBooksPdf.com

chokes, 544
circuit analysis, 128, 190, 229, 235, 262, 264, 473, 629
Circuit breaker, 15-16, 24, 50-52, 55, 64-65, 73, 101, 207, 221, 1041
circuit breakers, 50-52, 67, 336
Circular mil, 52, 66, 1041
circular mils (CM), 54
Clamper, 927, 944-946, 955, 957, 1041
Clampers, 944, 955
Class A amplifier, 768, 773, 779, 791, 815-816, 819, 822-823, 838, 1041
Class B amplifier, 768, 786-787, 791, 819-820, 822-823, 838, 1041, 1046
Class B amplifier operation, 787
Clear, 42, 179, 233, 305
Clipping, 16, 154, 497, 586, 755, 816, 847, 862, 872
Clock, 89, 369, 1029
Closed circuit, 24, 48-49, 55, 64-65, 73, 1041
Closed loop, 136, 809, 821, 831, 1041, 1044
Closed-loop voltage gain, 835, 851-856, 858-859, 865, 908, 916, 930
CMRR, 835, 838, 842-844, 847-850, 864-869, 873-874, 931, 937, 955, 957, 962, 1041
Coaxial cable, 1040
Codes, 42, 45, 48, 124, 414, 989-990, 1000-1001, 1012, 1031
Coding, 1011-1015, 1029
coefficient of coupling, 1041
Coil, 42, 298, 300, 308-315, 317-319, 321-323, 325, 327, 330-339, 517-521, 523, 527-528, 540, 542, 545-550, 553, 583, 598, 618, 621, 627-631, 633-634, 636-638, 642-643, 651, 654-655, 681, 693, 984-985, 1040-1041, 1043-1044, 1048
Cold junction, 968-969, 1001, 1041
Collector, 92, 768-782, 784, 786-787, 792-794, 802, 815-818, 820-825, 829-831, 833, 839-840, 910, 922, 999-1000, 1040-1042
Collector current, 771, 773-777, 779, 792-794, 802, 815, 822, 824, 922, 1040
Collector leakage current, 775
Collector resistance, 830
Color code, 40, 42-44, 48, 109, 498, 586, 1012, 1041
color coding, 1011-1015
Colpitts oscillator, 807, 810, 819
Common, 4, 8, 13, 28, 31-32, 36, 39, 41, 45, 48, 51-52, 54, 61, 65, 87, 134, 148-150, 152, 154, 157-158, 186, 229, 250, 268, 272, 289, 292, 314, 327, 329-330, 367, 369, 377-378, 392, 408-409, 428, 442, 519, 523, 543-544, 580, 617, 647, 656, 688, 739, 750, 768, 786-787, 802-806, 819-820, 823, 841-848, 865-866, 868-869, 927-931, 936-937, 954-955, 969-970, 1041-1043, 1045-1046
Common mode, 835, 845, 865, 874, 1041
Common-base amplifier, 841
Common-base configuration, 802
Common-collector amplifier, 784, 786-787, 823, 1042
Common-drain amplifier, 802, 805
Common-emitter amplifier, 779
Common-mode, 835, 838, 841-848, 865-866, 868-869, 873, 928-931, 936-937, 952, 955, 962, 973, 1041
gain, 835, 838, 842-848, 865-866, 868-869, 873, 928-931, 936-937, 952, 955, 1002, 1041, 1045
input impedance, 928, 930, 937, 955, 962
input voltage, 844-848, 865, 873, 929, 937, 955
rejection, 835, 838, 842-845, 847, 865-866, 873, 928, 930-931, 937, 952, 973, 1002, 1041
rejection ratio (CMRR), 835, 838, 842, 847, 865, 931, 1041
Common-mode gain, 842-844, 847-848, 865-866, 868-869, 929
Common-mode input, 838, 841, 844-847, 868, 873
Common-mode input resistance, 846
Common-mode operation, 842
Common-mode rejection, 835, 838, 842-845, 847, 865-866, 873, 928, 931, 937, 952, 973, 1002, 1041
Common-mode rejection ratio (CMRR), 835, 838, 842, 847, 865, 931, 1041
Common-mode signals, 842, 847, 865, 873, 929, 936-937, 1045
Common-source amplifier, 802-803
Communication systems, 469, 544, 621, 644
Communications, 34, 300, 459, 544, 588, 738
Commutator, 324-325, 327-329, 336, 339, 366
Comparator, 851, 877-878, 880-881, 894-896, 907, 914-917, 949, 993, 997-1000, 1006, 1008, 1025, 1030-1031, 1048
Compensation, 381, 860-861, 972-973, 977, 1001-1002, 1041
input offset voltage, 860-861
Composite waveform, 375, 387, 1043
Computer memories, 437, 441
computers, 34, 97, 99, 437, 583, 936, 968, 998
Conditions for oscillation, 807-809, 831, 892-893
conductance, 8, 24, 40, 42, 65-66, 182-183, 206-207, 214, 473-476, 504-505, 513, 570-572, 591, 625, 1021, 1041, 1047
Conductance (G), 182, 473-475, 570-571, 625, 1041
Conduction angle, 996
Conduction band, 705-708, 714, 739, 755, 762, 764
Conduction electron, 708
Conductivity, 307, 708, 752, 797
conductors, 15, 28, 48, 53, 66, 148, 152, 154, 186, 321, 369, 387, 398, 520, 707, 1047
insulators, 28, 66, 707
semiconductors, 28, 66, 707
Constant-current limiting, 922
Constant-current region, 39
Constant-current source, 950-951
Contact resistance, 178, 210-211
Control element, 907-908, 910-911, 913-915, 923, 1047
Controller, 186, 329, 817, 863, 977, 996, 1046
Conventional current, 755
Conversion, 9, 34, 77, 90-91, 95-96, 111, 115, 388, 436, 478, 485, 527, 541, 547, 578, 628, 756, 967-1008, 1020, 1030, 1041, 1043, 1045-1046
conversions, 1, 9, 19-20, 386, 405, 625, 992
Converter, 119, 156, 377-378, 643, 686-687, 817-818, 881, 950-951, 963, 968, 986, 989-990, 1000-1001, 1025
Converters, 98, 927, 950, 962-963, 998
copper, 27-28, 32-33, 53-54, 65, 67, 72, 113, 118, 369, 411, 519-520, 707, 957, 969-971, 973, 1002, 1004, 1041
Copper-zinc battery, 32-33
Core, 27, 187, 298, 307-308, 310-311, 313, 317-319, 325, 327, 333, 337, 339, 365, 519-520, 523, 543-544, 547-550, 1041
Coulomb, 8, 24, 29, 31, 38, 40, 64-67, 72, 404, 1041
coulomb (C), 24, 65-66, 404, 1041
Counter, 330, 482, 491-492, 582, 741, 749-751
Coupling, 379-380, 384-385, 402, 437, 439, 441-442, 455, 489, 494, 500, 502, 510-511, 645-646, 667, 773, 779, 815-816, 823, 833, 848, 955, 1041, 1044
Covalent bond, 705
Covalent bonding, 704
Critical frequency, 650, 899-905, 916-917, 923, 952-953, 1023, 1025, 1043, 1046
Crossover distortion, 787-788, 791, 831
crossover networks, 646
Crystal, 58, 705-709, 755-756, 762, 807, 811-813, 819, 831, 985, 1041, 1045
Crystal oscillator, 807, 811-813, 831
current, 2, 7-8, 14-15, 17-18, 21, 23-75, 77-87, 90-92, 95-100, 102-115, 119-120, 122-123, 126-132, 135, 138-140, 146-149, 152-159, 162, 167-172, 178-179, 182, 186-187, 190-201, 203-205, 207-215, 217-227, 229-232, 237-238, 242-246, 250-251, 255-256, 259-262, 264-269, 271, 274-278, 280-281, 283, 285-287, 291-292, 304-306, 308-319, 321-325, 327-340, 341-400, 407, 419, 421-424, 429-431, 433-437, 439, 444-448, 459-461, 463-469, 474, 476-478, 480-484, 486-488, 495-496, 498, 502-505, 507-509, 511, 517-523, 526-531, 533-552, 554, 557-564, 570, 572-574, 576-577, 579-581, 583, 585-586, 590-592, 595-598, 604-614, 616-619, 625-633, 636-639, 643, 649-657, 677-678, 680, 682-683, 693, 707-719, 726-730, 732-738, 740-744, 746-747, 755-756, 758-759, 762-764, 768-771, 773-777, 779, 782-786, 789-795, 797-804, 815, 818-822, 824, 826, 830-831, 837, 845-846, 849-850, 865-866, 881, 889-890, 906-910, 912, 918-919, 922-923, 927, 937-943, 959, 962-963, 972-975, 977, 999-1002, 1036, 1040-1048
ampere-hour rating, 97, 99-100, 112
ampere-turn (At), 298, 308, 334
bias, 502, 703, 710-718, 736, 738, 741, 752-753, 755-756, 762, 764, 768-771, 773, 776-777, 779, 782, 784, 791, 794, 798, 800-803, 815, 819-821, 830, 845-846, 865-866, 869, 878, 923, 931, 937-943, 955-957, 959, 963, 1045-1046
bleeder, 229, 242, 244-246, 276, 1041
constant, 31-32, 36, 38-39, 53, 65, 78-81, 96-97, 106, 182, 209, 211, 298, 325, 330-331, 336, 348, 351, 366-367, 386, 388-389, 398, 407, 421, 423-424, 429-431, 439, 444-448, 452, 455, 505, 517, 526-531, 534-537, 545-548, 551-552, 563-564, 581, 583, 592, 606, 612, 618, 661, 677-678, 682-683, 728-730, 732-733, 735-738, 743, 747, 752-753, 756, 763, 774-775, 822, 886-887, 889-890, 906-909, 922-923, 938, 941-942, 963, 973-975, 1000, 1041-1042, 1045-1048
conventional, 741, 755, 937
current divider, 178, 197, 213, 1042
dark, 58, 74, 86, 730, 741, 751, 756, 763
electron, 24-30, 64-66, 72, 95, 306, 309, 324, 336, 377-378, 422, 707-711, 713-714, 716, 741, 753, 755-756, 762, 764, 818, 1042-1043, 1045-1046
electron and hole, 707
holding, 995-996, 999
hole, 703, 707-711, 713, 741, 753, 755-756, 762, 764, 818, 1043, 1046
induced, 298, 304, 315, 319, 321-322, 324-325, 333-336, 338-339, 368, 392, 517-518, 520-523, 526-528, 530-531, 540, 546-548, 550, 583, 682-683, 1043-1044
leakage, 407, 414, 421, 423, 436-437, 445, 496, 511, 741, 775, 792, 798, 1007
left-hand rule, 306, 333
load, 24, 32, 35, 38-39, 48-49, 64-65, 71, 73, 97, 99-100, 105-106, 111-112, 115, 132, 193, 195, 207-209, 229, 242-246, 255-256, 259-262, 264, 274-278, 281, 283, 287, 291-292, 321, 328, 330-331, 338, 367, 369, 505, 542, 579-581, 643, 654, 722-723, 727-730, 732-735, 752-753, 758-759, 762-763, 773, 790, 822, 826, 837, 906-910, 922-923, 950-951, 957, 959, 962-963, 994, 996-997, 1020-1021, 1040-1044, 1046-1048
measuring, 24, 47, 56, 58, 61, 65, 70, 100, 102, 113, 148, 153, 194, 204, 251, 277-278, 305, 341, 381, 384, 398, 502-503, 545, 564, 972, 980, 1045
parallel resistive circuits, 229, 280
probe, 36, 378-379, 381, 383, 398, 444, 483, 498, 598, 1036, 1045
rotor, 325, 327-329, 334, 336, 339-340, 351, 363-370, 386-389, 392, 397-398, 1040, 1043, 1046-1047
series-parallel resistive circuits, 229, 280
shunt, 178, 208-211, 324, 327-328, 331, 338, 910, 912, 922-923, 1047
source, 15, 24, 29, 31-32, 35-36, 38-39, 48-49, 54, 57, 62, 64-67, 69, 71, 73, 75, 85, 97-99, 105-110, 112-113, 123, 126, 128-130, 132, 135, 138-140, 146-147, 149, 152-153, 155, 157-159, 162, 179, 182, 186, 191-194, 199-200, 203, 214-215, 217-218, 221, 229-232, 243-244, 250, 255-256, 261-262, 264-269, 271, 274, 276-278, 280-281, 285, 287, 292, 309, 327-328, 359-361, 363, 368, 370, 388-389, 394, 414-415, 419, 429-430, 433, 435-437, 446-447, 452, 460-461, 463-464, 466-467, 469, 474, 477-478, 482-483, 486-488, 495-496, 502-503, 541-545, 548-549, 558-564, 572-574, 590-592, 598, 604-606, 626, 651-652, 714, 728, 764, 797-800, 802-804, 818-822, 830-831, 972-973, 1018-1021, 1036, 1040-1048
superimposed, 361, 394, 439, 483
surge, 729, 756
switching, 421, 517, 526, 531, 543-544, 581, 583, 598, 768-769, 792-793, 820, 831, 878, 923, 994, 997, 1001, 1007
zener test, 736-737
Current gain, 768, 771, 776, 782-786, 820-822, 830, 938, 956, 1042, 1045
Current limiting, 82, 330, 733, 922-923

www.EngineeringBooksPdf.com

Current source, 24, 38-39, 65, 85, 97, 264-265, 268, 278, 937, 950-951, 972-973, 1018-1019, 1042
dependent, 278, 937
independent, 97, 972
Current tracer, 207
Current-limiting, 131-132, 738, 910
Current-to-voltage converter, 643, 950-951
Cutoff, 459, 493, 503-504, 506, 510, 583, 593, 618-620, 623, 625, 639-640, 649-651, 653-654, 756, 768, 773-776, 779, 786-789, 792-793, 797, 806, 815-816, 820-823, 829, 831, 901, 973, 1042-1043, 1047-1048
cutoff frequencies, 618-620, 623, 625, 639-640, 649, 651, 653-654, 1040
Cutoff frequency, 459, 493, 503-504, 506, 510, 583, 593, 619, 640, 649-650, 973, 1042-1043
Cutoff region, 774-775, 792
Cutoff voltage, 792, 797, 806, 1048
Cycle, 341-347, 350-353, 355-356, 362-364, 370, 372-373, 376-377, 382-392, 394, 396-398, 435-436, 438-439, 477, 485, 531, 534, 540-541, 573, 578, 592, 611, 692, 721-723, 726-728, 730-731, 746, 752-753, 762, 773, 786-787, 791, 806, 816, 819-820, 823, 913, 933-934, 944-945, 992, 996-997, 999-1000, 1007, 1025, 1027, 1040-1043

D

Dark current, 741, 751, 756, 763
Data, 1, 11, 301, 315-316, 378, 441, 737, 800, 802, 806-807, 847, 849, 857-858, 928, 973, 989, 1028-1031, 1036
Data acquisition, 928, 1036
Data sheet, 737, 800, 804, 806-807, 845, 858
dB, 603, 617, 619-620, 649-650, 657, 783, 806, 842-844, 848-849, 866-868, 898-905, 914-915, 917, 931, 1042, 1045
dB measurement, 617
dBm, 60-61, 69-70, 150, 383
dc biasing, 289
dc circuits, 24, 359-360, 421, 423, 451, 455, 459, 480, 526, 551, 554
DC generator, 298, 324-328, 335, 338-339, 363, 366, 397, 1042
DC load line, 773, 776
DC motor, 298, 328-331, 335
DC operating point, 830
DC power supply, 98, 208, 210, 212, 283, 437-439, 445, 703, 719, 729, 742-743, 750, 753, 756, 934, 1042
DC resistance, 520
DC restorer, 955, 963, 1041
DC supply, 440, 500, 751, 771, 782, 807, 809, 814-815, 818, 820, 836, 847, 864, 934, 939-941, 954, 957, 1045
DC supply voltage, 440, 500, 751, 771, 782, 807, 809, 814-815, 820, 864, 957, 1045
DC value, 686, 776, 957
Decade, 898, 900-904, 914-915, 1042, 1045
Decibel (dB), 603, 619, 649, 1042
decibels (dB), 781, 842
voltage gain, 781, 842
Decimal numbers, 2
Decoupling, 402, 440-441, 445, 455, 823, 935, 1041-1042
Delay angle, 996
Demodulation, 935
Demodulator, 933, 983
Depletion, 710-714, 719, 735, 738-739, 741, 752-755, 762, 768, 774, 794-797, 800, 820, 823, 827-828, 831, 1042
Depletion mode, 768, 796-797, 803, 820, 823, 1042
Depletion MOSFET, 796
Depletion MOSFET (D-MOSFET), 796
Depletion region, 710-714, 735, 738-739, 741, 752-755, 762, 774, 794-795, 827, 1040
derivative, 692, 914-915, 1042
sine wave, 1042
Detector, 144, 316, 647-648, 749-752, 768, 817-818, 878-879, 907-908, 911, 916, 944, 949-950, 956, 962-963, 969, 973, 1000-1001, 1046
Development board, 1023
Development software, 1023-1025, 1042
Dielectric, 402-404, 406-413, 422, 435, 444-447, 449, 454, 456, 738-739, 797, 1042
air, 406, 408, 449
glass, 406, 408, 412
oil, 406, 408
paper, 406, 408, 449
dielectric constant, 402, 407-408, 410, 444-446, 449, 739, 1042
dielectric strength, 402, 406-407, 444-445, 1042
dielectrics, 410
Difference, 4, 9, 11, 13, 17, 31-32, 48, 50, 55, 59, 64, 66, 149, 157, 243, 253, 281, 309-310, 316-317, 369-370, 383, 386-389, 392, 397-398, 414, 424, 447, 461, 465, 470, 562, 604, 623, 625, 627-628, 632, 693, 712, 722, 850-851, 908, 910, 1004
Differential amplifier, 835, 837-842, 850, 865, 867-868, 873, 928, 1042
Differential amplifier circuit, 838
Differential gain, 842, 844, 866, 868, 929
Differential input, 838, 841, 843-846, 853, 865, 873-874, 928-929, 937, 948
Differential mode, 835, 841, 865, 874, 1042
Differential voltage, 842-844, 847, 853-854, 865, 918, 928, 948, 1041
Diffusion, 710, 755
Digital, 54-56, 58, 65, 97, 119, 145, 149, 156, 248, 252, 377-379, 381, 398, 440-441, 498, 586, 749-750, 768, 817-818, 863, 881, 989-993, 998, 1000-1001, 1003, 1025, 1029-1031, 1040-1043, 1045-1046
Digital codes, 1000-1001, 1040
Digital multimeter, 55-56, 65, 1037, 1042
Digital multimeter (DMM), 55, 1037
Digital oscilloscope, 378-379, 498, 586
Diode, 28, 58, 130, 366-367, 583-584, 688, 703, 710-719, 721-726, 728-731, 733, 735-739, 741-742, 744-746, 748-750, 752-759, 762-765, 788, 908, 913, 940, 944-945, 947-949, 955-957, 960, 962-963, 965, 977-978, 994-995, 997-998, 1040-1046, 1048
constant-current, 977
forward-biased, 711-712, 715-719, 721, 723-724, 726, 730-731, 735, 739, 755-757, 763, 944-945, 977, 995
four-layer, 994, 1048
ideal model, 717, 719, 737
light-emitting, 130, 703, 739, 753, 1044
optical, 749, 835
pin, 913, 940
pn junction, 703, 710-715, 735, 738-739, 741, 752-753, 755-756, 762, 764, 1040, 1045
practical model, 718-719, 721, 762
rectifier, 703, 716, 719, 721-726, 728-731, 733, 735-736, 741, 744-746, 748-749, 752-756, 758-759, 763-764, 913, 947, 994, 1041, 1043, 1046
reverse-biased, 713, 715-719, 722-724, 726, 730-731, 738, 741, 753, 756-757, 763, 944, 947-949, 1043-1045
symbol, 715-716, 719, 735, 739, 741, 978, 994, 1044
Diode approximations, 715, 717
Diode capacitance, 739, 742, 763
Diode characteristic curve, 715, 735
Diode drop, 730, 945, 947
Diode model, 717-718, 756
complete, 718
practical, 717-718, 756
Diode packages, 716
Diode symbol, 715-716, 719, 735, 978
diodes, 366-367, 397, 703-765, 788, 835, 913, 944, 948-949, 957, 1041, 1047
biasing, 703, 710-711, 728, 788
characteristics, 367, 703, 710, 714-715, 735, 738, 753, 757, 762, 788, 1041
clampers, 944
covalent bonding, 704
donor atoms, 708
doping, 703, 708, 735, 739, 752-753, 755-756
electron flow, 716
energy levels, 704, 756
equivalent circuits, 737
full-wave rectification, 719, 722
GaAs, 740
germanium, 704, 711, 714, 764
half-wave rectification, 719, 722, 746
LEDs, 703, 735, 740-741, 756, 763
majority carrier, 703, 714, 752-753, 762
minority carrier, 703, 713, 753
notation, 1047
PIV, 703, 719, 722, 724-729, 731, 752-754, 758-759, 762-763
p-type materials, 762
rectifiers, 703, 719, 729, 758, 762
regulator, 366, 703, 728-730, 732-735, 744-745, 747-748, 750, 753, 759, 913, 1047
silicon, 703-712, 714, 733-735, 740, 753-756, 762, 764, 835, 1047
valence electrons, 704-705, 708-709, 711, 714, 756, 762, 1041
Zener diodes, 703, 735-736, 738, 742, 753-754, 756, 948-949, 957
Directional, 126
Director, 519
discharging, 421-426, 430, 439, 444-447, 583, 660-662, 664, 666, 669, 671, 730-731, 752, 763, 890, 896, 923
Disk, 302-303, 305, 311, 315-317, 322-324, 336, 338, 410, 450, 456, 983
Dissipation, 91, 94, 99, 106, 111, 113, 214-215, 227, 486, 489, 514, 579-581, 599, 837, 912
Distortion, 381, 581, 667, 787-788, 808-809, 831, 847, 862, 891, 915, 1048
Division, 4-5, 60, 379-380, 382-383, 390, 398, 484, 592
DMM, 24, 39, 55, 58-59, 61, 65-66, 74, 149-150, 204, 247, 277, 281, 498, 586-588, 748, 814, 1036-1037, 1042
Donor, 708
Doping, 703, 708, 735, 739, 752-753, 755-756, 1042
Download, 1024, 1026, 1028
Drain, 167, 281, 598, 768, 794-803, 805-807, 818-822, 830-831, 833, 893, 920, 1041-1043, 1048
Drain-feedback bias, 800-801
Droop, 986, 988-989, 1007, 1042
duty cycle, 341, 370, 372-373, 376-377, 384-386, 388-389, 392, 394, 692, 694, 806, 933-934, 999, 1027, 1040, 1042
Dynamic range, 984
Dynamic resistance, 712, 718

E

earth ground, 54, 97, 148
ECG system, 952, 954
Effective value, 349, 387, 1042, 1046
efficiency, 35, 77, 97-100, 105-106, 112, 115, 327-328, 338, 367, 370, 581, 740, 821, 826, 831, 1003, 1042
Electric circuit, 24, 37, 48-49, 54-55, 64-65, 67, 69, 73, 77, 90-91, 111, 115, 135, 158, 309, 321, 1041, 1047-1048
Electric field, 29, 402, 406, 408, 435, 444-445, 633, 735, 741, 756, 1042-1043
Electrical isolation, 952, 1042
Electrical noise, 543-544, 930
Electrical safety, 1, 14, 21
Electrical shock, 1, 14, 17, 48, 955, 1042
Electrical storage, 437
Electrical units, 1, 7-8, 299
Electrocardiograph (ECG), 927, 952
Electrode, 32-33, 41, 409-412, 927, 952, 954, 1013
Electroluminescence, 739-740, 756
Electrolyte, 34-35
electrolytic capacitors, 409, 411-414, 450, 454, 913
Electromagnet, 298, 305, 310, 313, 315-316, 322, 328, 333-334, 365, 370, 397, 1044
Electromagnetic field, 298, 305-306, 310-312, 314-316, 323, 333-334, 339, 517-518, 522, 526, 544, 548, 1042
Electromagnetic force, 340
electromagnetic induction, 36, 298, 319, 321-322, 334, 338-339, 367, 519, 1042
electromagnetic interference (EMI), 543-544
electromagnetic theory of light, 299
electromagnetism, 297-340, 1042
Electromotive force (emf), 31
Electron, 24-30, 64-66, 72, 95, 299, 306, 309, 324, 336, 377-378, 422, 705-711, 713-714, 716, 741, 753, 755-756, 762, 764, 818, 1042-1043, 1045-1046
conduction, 705-711, 714, 753, 755, 762, 764, 1042
free, 24-25, 27-28, 30, 64-65, 72, 95, 422, 705-710, 753, 755, 762, 1042-1043
valence, 25-30, 64-65, 705-709, 711, 714, 753, 755-756, 762, 764, 1043, 1045-1046, 1048
Electron beam, 377-378
Electron current, 707, 755, 818
Electron-hole pair, 705-706
Electronic, 2, 5, 16, 28, 34, 50-51, 55, 58, 65, 84, 90,

www.EngineeringBooksPdf.com

97-99, 105, 119, 148, 156-157, 375, 387, 413, 437-438, 469, 489, 583, 644, 705, 728-729, 753, 792, 891, 894, 915, 968-969, 994, 1042, 1046-1048
Electronic tuning, 738
electrons, 25-30, 32-35, 37-38, 40, 64-67, 70, 72, 74, 90, 95-96, 115, 135, 299, 303-304, 403-404, 421-422, 704-714, 735, 739, 753, 755-756, 762, 770, 797, 1040-1042, 1044-1045, 1047-1048
Electrostatic discharge (ESD), 798
Element, 25-26, 42, 49, 51, 64-66, 72, 114, 144, 276, 304, 423, 441, 509, 512, 596, 616, 886, 889, 891, 897, 907-908, 910-911, 913-915, 923, 944, 951, 962, 985, 997, 1040, 1042, 1044, 1047
Emitter, 740, 749-752, 768-777, 779-782, 784-789, 792, 802, 805, 815-824, 826, 829-831, 833, 839-841, 845, 908-910, 940, 1040-1042
Emitter current, 770-771, 789, 822, 824, 1040
Emitter-follower, 784-785, 787, 805, 826, 830, 1042
Encoder, 330, 993
priority, 993
Encryption, 250
Energy, 7-8, 26-27, 29-32, 34-37, 40, 64-67, 70, 72, 77-118, 132, 135, 319, 328, 341, 367, 402-403, 406, 408-409, 413, 422, 435-436, 444-446, 449, 526-527, 540-541, 546-548, 550, 578-579, 592, 633, 704-709, 711, 714, 738-739, 756, 762, 764, 807, 842, 1042-1048
inductor, 518-519, 526-527, 540-541, 546-548, 550, 578, 592, 633, 1042-1043, 1046, 1048
potential, 31-32, 35, 64, 66, 135, 711, 714, 738, 756, 762, 764, 1040
Energy band, 26, 705-706, 709, 1047
Energy conversion, 77, 91, 95-96, 111, 115, 485, 527, 547, 578, 592
Energy diagram, 705-706
Energy gap, 706-708, 762
Energy level, 26-27, 96, 135, 707, 739
Energy levels, 26-27, 704, 756
engineering notation, 1-2, 5-8, 12-13, 17-21, 1042, 1044
Enhancement, 768, 796-797, 800, 802-804, 820, 823, 828, 831, 833, 1042
Enhancement MOSFET, 796-797, 802, 831
Envelope, 647-648
Equivalency, 229, 254-255, 257, 276, 629, 1047
Equivalent circuit, 241, 244-246, 254-262, 276, 278, 283, 291, 324, 327-328, 331, 407, 480, 485, 496, 502, 520-521, 634, 642, 739, 759, 782, 907, 1018-1020
Erase, 316
Error, 1, 11, 17, 59, 247, 354, 642, 845-846, 865-866, 911, 971-972, 974, 989-992, 994, 1000, 1040, 1042
Error detector, 907-908, 911
Error voltage, 846, 865-866, 908
Ethernet, 973
Event, 15, 685, 744, 747, 990, 1024
Exciter, 366-367, 388, 1042
Exponent, 1-3, 5, 17-18, 425, 534, 1042, 1045
Exponential curve, 424, 527, 546, 661, 672

F

Factoring, 424, 929
fall time, 341, 371, 376-377, 386, 398, 1043
Falling edge, 370, 671-676, 678, 680, 682-685, 1043
Farad, 8, 18, 321, 402, 404-405, 409, 445, 454, 1043
Faraday, Michael, 299, 321
Fault analysis, 744, 748, 815
Feedback, 387, 489, 583-584, 768, 800-801, 807-813, 817, 819-823, 829, 831, 835, 849-854, 856-858, 860-862, 864-867, 869, 873, 883, 885-894, 897, 900, 908-909, 914-915, 917, 945, 948, 950-951, 956-957, 963, 975, 1041, 1043, 1048
negative, 387, 800-801, 817, 822-823, 831, 835, 850-853, 856-857, 864-866, 869, 873, 878, 883, 887-890, 892-894, 897, 900, 908-909, 917, 945, 948, 957, 1041, 1043
positive, 387, 800-801, 807-809, 819, 822-823, 831, 851, 864, 878, 887-890, 892-894, 897, 914-915, 917, 945, 948, 957, 1041, 1045
Feedback fraction, 853
Feedback resistor, 860-862, 866, 883, 887-890, 915, 917, 956-957, 963
Feedthrough, 823, 986, 988-989, 1043
Ferrite bead, 543-544
Ferromagnetic, 302-303, 307, 325, 327, 333, 337, 519, 523, 544
ferromagnetic materials, 302-303, 307
Fetal heartbeat monitoring, 937
Fiber, 984
Field, 29, 36-37, 51-52, 87, 273, 289, 298-300, 302-308, 310-312, 314-325, 327-331, 333-339, 363-370, 386-387, 389, 392, 398, 402, 406, 408, 435, 444-445, 517-522, 526-527, 531, 540, 544, 546-548, 578, 633, 679, 735, 741, 756, 796, 802, 818-820, 831, 877, 983, 985, 1023-1031, 1042-1047
Field-effect transistor (FET), 794, 818, 1043
Figure of merit, 734
film capacitors, 411-412
Filter, 402, 437-441, 446, 452, 455, 489-491, 500-503, 506, 544, 581, 583-584, 589, 592, 603, 617-625, 638-641, 643-644, 646, 648-651, 653-655, 670, 728-732, 744-748, 752-754, 759-760, 763, 811, 897-905, 920-921, 952-954, 957, 963, 973, 980, 1024-1025, 1030-1031, 1040-1043, 1045-1046
active, 490, 581, 646, 877, 897-898, 900-901, 915, 917, 952, 957, 963, 1040
band-elimination, 623
band-pass, 603, 617-620, 623, 625, 638-641, 646, 649, 651, 653-655, 901, 903-904, 915-916, 1025, 1030, 1040
band-reject, 623
band-stop, 603, 617, 623-625, 638, 643-644, 649, 651, 653-654, 1025, 1040
biquad, 1030
capacitor-input, 703, 729-730, 732, 735, 752-754, 759, 1041
crossover, 646
EMI, 544
high-pass, 490-491, 500-502, 581, 583, 592, 646, 670, 897, 900-905, 915-916, 963, 1025, 1043
LC, 617, 623, 650
low-pass, 490-491, 506, 510, 581, 583-584, 646, 660, 686, 897-899, 901-905, 915-917, 952, 973, 980, 1025, 1030
notch, 623
power supply, 437-439, 452, 544, 583, 703, 728-730, 732, 744-745, 747, 752-753, 913, 952, 1041-1042, 1045-1046
single-pole, 897-898, 900-901, 905, 917
two-pole, 897-899, 901-904, 914-916
filters, 66, 325, 439-441, 489-490, 544, 603, 617, 638, 645-646, 653-654, 656, 732, 897-901, 903, 913-914, 920-921, 923
double-tuned, 645-646
passive, 490, 617, 646
Fitting, 102
fixed capacitors, 409
fixed resistors, 41-42, 67
Flash ADC, 993, 1003
Floating level, 752
Flow chart, 1024
Flow rate, 968, 978, 982-983, 1000, 1002, 1005, 1007
Flow rate measurement, 982-983
flux, 8, 298-305, 308-310, 315, 317-326, 328, 330-331, 334-339, 364, 544, 1041, 1043-1044, 1047-1048
Flux density, 299-305, 317-320, 323-325, 328, 334-337, 339, 1043-1044, 1047
Forced commutation, 995-996
Forward bias, 703, 710-712, 715-718, 752-754, 756, 762, 764, 840, 1043
Forward current, 711-713, 715, 740, 753, 755-756, 996, 1044
Forward transadmittance, 802, 806
Forward transconductance, 806
Forward voltage, 713, 715, 717, 995
Forward-blocking region, 995
Forward-breakover voltage, 995
Forward-conduction region, 995, 1006
Forward-reverse bias, 770, 773, 830
Fractional number, 18
Free electron, 24-25, 27-28, 65, 72, 706-707, 709, 1043, 1046
free electrons, 27-28, 32, 37-38, 40, 64-65, 67, 95, 115, 403, 421-422, 705-710, 739, 753, 755, 762, 1042, 1044
frequencies, 42, 346, 375, 383, 386-387, 390, 440, 446, 452, 459, 490-491, 493-494, 496, 502-503, 507-509, 520, 544, 565, 583, 590, 594-595, 615-620, 623, 625, 631, 635, 639-640, 645-647, 649-651, 653-656, 739, 886, 889, 891, 899-902, 915, 921, 952, 985, 1040-1041, 1043-1048
band, 42, 440, 544, 603, 617-620, 623, 625, 639-640, 645-647, 649, 651, 653-656, 739, 901, 915, 1040, 1043, 1046-1047
corner, 952
half-power, 603, 617, 619, 649-650, 653, 1043
natural, 520, 985, 1044
resonant, 603, 615-620, 623, 625, 631, 635, 639-640, 645-647, 649-651, 653-656, 739, 1040, 1046-1047
selectivity curve, 620
square wave, 375
transformer, 387, 645-646, 1040-1041, 1043, 1045-1048
Frequency, 8, 18, 34, 144, 341-342, 345-347, 351, 364-365, 367-369, 372, 374-377, 383-390, 392-398, 429-431, 433, 436-437, 439-442, 445, 447-448, 452, 455, 459-461, 463, 467-471, 473-474, 476-478, 480, 482, 489-494, 496-498, 500-507, 510-511, 515, 533, 536-537, 541-549, 552, 563-565, 569, 577, 579, 581-584, 586-587, 590-596, 598-599, 603, 605-607, 609-626, 628-633, 635-655, 660, 666-667, 692, 731, 739, 746, 752, 761, 776, 780, 782, 809-812, 829, 831, 841-842, 847-848, 873, 885, 890-892, 894-905, 915-917, 919-921, 923, 930-931, 941, 952-953, 973, 997, 1025, 1042-1046
3 dB, 619-620, 649, 899, 902-903, 917
alternator, 341, 351, 364-365, 367, 388, 392, 1040, 1042, 1046
carrier, 647, 739, 752, 1044
center, 746, 752, 754, 831, 904, 916, 921
critical, 619, 649-650, 899-905, 916-917, 921, 923, 952-953, 1023, 1025, 1043, 1046
difference, 369, 383, 386-389, 392, 397-398, 447, 461, 470, 473, 502, 541, 609, 613, 623, 625, 628, 632, 850, 873, 1042
fundamental, 8, 341-342, 372, 375-376, 386-387, 393, 398, 891, 905, 1043
intermediate, 144, 648
motor, 341, 367-369, 387-389, 392, 397, 984, 1040, 1043, 1046
Nyquist, 992, 1045
oscillation, 809-811, 821, 829, 831, 892, 894-895, 916, 920
pulse repetition, 372, 387, 1046
radio, 144, 345, 440, 544, 603, 621, 645, 647-648, 997, 1046
side, 34, 442, 973
sum, 376, 431, 433, 445, 447, 461, 473, 477, 548, 563, 569, 573, 577, 628, 915, 1044
unity gain, 897-898, 900-901, 917, 930-931
Frequency modulation (FM), 739
Frequency response, 375, 459, 491-493, 496, 503, 510, 564, 581, 584, 614, 618, 623-624, 639, 648, 660, 848, 873, 923, 1043
Frequency spectrum, 646
Fuel cell, 24, 34-35, 65, 67, 72, 1043
fuel cells, 34, 37, 64
Full-wave average value, 754
Full-wave rectification, 719, 722
full-wave rectifier, 438-439, 703, 719, 722-725, 728-729, 731, 735, 744-745, 747-748, 752-756, 760, 764, 1030, 1041, 1043
bridge, 703, 728, 748, 752-754, 756, 1041
center-tapped, 723-725, 745, 752, 754, 756, 764
Function, 36, 39, 47-48, 55, 60, 66, 70, 78, 97, 183, 268, 315, 335, 341, 345-347, 351, 383-386, 395, 445, 490, 497-499, 512, 544, 579, 581, 586-587, 598, 605, 615-616, 632, 648, 670, 691-692, 863, 885, 923, 934, 946-947, 989-990, 1027, 1036-1037
Function generator, 39, 341, 346, 383-386, 395, 497-499, 512, 586-587, 598, 632, 648, 691-692, 897, 923, 946-947, 1036-1037, 1043
function generators, 268, 346-347, 895
Fundamental frequency, 341, 372, 375-376, 386-387, 393, 398, 1043, 1046
Fuse, 15, 24, 50-52, 55, 62, 64-65, 67, 69, 73, 114, 189, 203, 207, 215, 225, 274, 724, 727, 743-745, 763, 765, 913, 1043
Fuse pullers, 51

www.EngineeringBooksPdf.com

fuses, 50-52

G

Gain, 41, 145, 490, 768, 771, 776-786, 802, 804-810, 816, 819-823, 825-826, 828-831, 833, 835, 837-838, 842-848, 850-856, 858-862, 864-871, 873-874, 881-882, 886, 889-890, 892-893, 897-902, 914-918, 920, 923, 928-932, 934-939, 941-944, 952-959, 963, 1025, 1030-1031, 1040-1043, 1045
  closed-loop, 835, 851-856, 858-860, 862, 865-867, 870-871, 892-893, 908, 914, 916, 920, 923, 929-930, 1045, 1048
  common-mode, 835, 838, 842-848, 865-866, 868-869, 873, 928-931, 936-937, 952, 955, 1002, 1041, 1045
  open-loop, 835, 845, 847-848, 850-854, 856, 859, 861-862, 864-867, 869, 873-874, 878, 918, 1041, 1045
Gain-setting resistor, 928-931, 955
Gallium, 708, 740
Gallium arsenide, 740
Gallium arsenide phosphide, 740
Gallium nitride, 740
Gallium phosphide, 740
Galvanometer, 251
Gate, 768, 794-800, 802-807, 818-823, 827, 831, 833, 893, 994-996, 1043, 1048
Gauge factor, 979-980, 1000-1002, 1005, 1043
Gauss, 8, 298-299, 302-304, 334-337, 339, 1043
Gaussmeter, 302
Generator, 36, 39, 66, 72, 298, 321, 324-328, 330-331, 334-336, 338-340, 341, 346-347, 351, 359, 363, 366, 383-386, 392, 395, 397, 428, 448, 482-483, 487-488, 497-499, 512, 531, 545, 586-587, 589-590, 598, 632, 648, 659-661, 671, 677-679, 682, 685-686, 697, 897, 923, 946-947, 1025, 1027-1028, 1030-1031, 1036-1037
  pulse, 330, 341, 346, 383-384, 386, 392, 395, 428, 659-661, 671, 677-679, 682, 685-686, 691-692, 697, 1027, 1030, 1040, 1042-1043
  signal, 346-347, 395, 589-590, 632, 648, 715, 897, 1027-1028, 1030-1031, 1036, 1040, 1042-1043, 1047
Germanium, 28, 65, 704, 711, 714, 764, 1043
Glass, 28, 41, 186, 299-300, 304, 412, 519
gold, 42-45, 48, 68, 73-74, 109, 304, 776, 1012
Ground, 14-17, 21, 24, 32, 41, 48-49, 54-55, 64-65, 73, 92, 119, 144, 148-151, 157-158, 163-166, 171, 174, 193, 207, 218, 221, 223, 226, 233, 242-246, 272, 274-275, 287, 289, 414, 437, 440, 443-445, 454-455, 482-484, 512, 531, 543, 586, 588, 688-689, 697, 715, 748, 752-753, 774, 777, 779-782, 788-789, 802-804, 823-825, 829, 831, 839-840, 846, 859, 886-887, 913-916, 933-934, 950-951, 975, 1036, 1041-1043, 1046-1047
Ground loop, 543
grounding, 16, 148, 483

H

Half-cycle average value, 347, 350, 363
Half-digit, 59
half-power frequencies, 619, 649
Half-power frequency, 603, 617, 650, 1043
Half-splitting, 77, 100, 102-103, 105, 112, 115, 152-155, 204, 586, 588, 744-745, 747, 814, 1043
Half-wave average value, 754
Half-wave rectification, 719, 722, 746
half-wave rectifier, 438, 703, 719-722, 728-731, 744, 748, 752-755, 760, 1043
Hall effect, 298, 304, 334, 1043
Hardware, 186, 1024, 1037
Harmonic, 370, 375-376, 386, 398
Harmonics, 341-342, 375-376, 387, 393, 543, 1043
Hartley oscillator, 807, 811, 819
Heart monitor, 937
heat, 34, 40-41, 50, 67, 70, 87, 90-93, 95-96, 105-107, 186, 316, 349, 367, 436, 446, 541, 547, 578, 705-706, 739, 743, 756, 908, 969, 1045
Heat sink, 50, 733, 908
Helium, 25-26
helium atom, 25-26
henries (H), 519
Henry (H), 517, 547, 1043
Henry, Joseph, 519
Hertz, 8, 18, 341, 345, 364, 372, 386-387, 397, 431, 537, 619
Hertz (Hz), 341, 345, 387, 619
Heterodyning, 647
High-pass filter, 491, 502, 670, 900-905, 915, 963
high-pass filters, 897
Hold, 59, 109, 150, 153, 164, 166, 223, 283, 499, 587, 705, 949, 968, 986-994, 1000-1001, 1005, 1042, 1046
Hold capacitor, 989
Hold time, 1042
Holding current, 995
Hole, 499-500, 703, 705-711, 713, 741, 753, 755-756, 762, 764, 818, 1043, 1046
Hole current, 707, 755, 818
Horsepower, 87, 338
horsepower (hp), 87
Hydrogen, 25-27, 30, 32, 34-35, 65, 67, 132, 1043
hydrogen atom, 26-27, 30
Hyperbola, 606
Hypotenuse, 357, 1043
hysteresis, 298, 317-319, 327, 334-335, 337-339, 943, 984, 1043

I

IC, 145, 435, 477-478, 504, 509, 513, 580, 627-628, 631-633, 650, 655-658, 703, 732, 770-780, 782-783, 789-793, 802, 820-821, 823-826, 830-832, 836-837, 840, 844-845, 860, 867, 889, 913, 930, 940, 973, 977
IC package, 860, 940
IC regulator, 729, 732
Ideal diode, 717
Ideal op-amp, 836-838, 845, 855, 867, 874, 886, 889, 917
ideal pulse, 370, 387, 661, 677, 1046
Impedance, 8, 459, 461-465, 467-469, 473-476, 478-482, 485-488, 503-505, 507-509, 511-513, 543-544, 559-561, 563-565, 569-572, 574-577, 579, 585, 590-592, 594-595, 598-599, 603-608, 613, 615-617, 623, 625-627, 630-632, 634-639, 641, 643-644, 646, 649-654, 656-657, 689, 754, 759, 812, 837, 874, 881, 930, 950, 955-957, 975, 985-986, 1045
  differential input, 874, 928, 937
  parallel RC, 459, 473-476, 478-481, 503-505, 508-509, 513, 570
  parallel RL, 557, 569-572, 574-575, 585, 591-592, 595, 599
  parallel RLC, 603, 625-627, 634, 649-651, 653, 656, 1045
  series RC, 459, 461-465, 467-469, 473, 478, 485-486, 503-505, 507, 513
  series RL, 557, 559-561, 563-565, 569, 585, 590-592, 594, 598
  series RLC, 603-606, 608, 610, 613, 615-617, 623, 649-652, 656, 1047
  series-parallel RC, 459, 480-481, 509, 513
  series-parallel RL, 557, 574-575, 599
impedance matching, 1043
Implementation, 894, 905, 975, 1030-1031, 1035, 1043
Indium, 740
Indium gallium nitride, 740
Induced current, 298, 321, 334, 338, 521, 546
induced voltage, 298, 315, 319-322, 324-326, 333-336, 338-339, 517-518, 521-523, 526-527, 531, 546-547, 583, 678, 682-683
Inductance, 8, 18, 42, 321, 517-520, 523-527, 537-539, 544-551, 553-554, 557-558, 578-579, 585, 588, 590, 595, 629-630, 650-651, 811, 983, 1043, 1045
Inductive reactance (XL), 1043
Inductive susceptance (BL), 557, 571, 591, 1043
inductors, 440, 517-555, 558, 583, 585-586, 597, 646, 656, 659, 677, 811, 1041
  magnetic field, 518-522, 527, 531, 540, 544, 546-548
Infrared, 740, 749-750
Infrared light, 750
Input, 77, 92, 97-100, 105, 112, 211, 242, 247-248, 274, 277, 281, 313-315, 327-329, 338, 346, 379-381, 384, 387, 395-396, 428, 437, 439-440, 442-444, 469-473, 483, 493-494, 497-503, 508, 510-511, 530-531, 533-534, 545-546, 558, 566-569, 581-582, 585-588, 590-591, 595, 597, 611, 617-620, 623, 639-640, 645-648, 659-672, 675-685, 688-690, 692-700, 719-735, 742-748, 751-756, 759, 762-763, 781-782, 784-789, 798, 804-809, 812-813, 815-816, 818-823, 825-827, 831, 835-869, 871-874, 878-892, 894, 896-898, 900-901, 908-910, 912-919, 922-924, 928-930, 932-938, 940-952, 954-963, 971-973, 978, 986-993, 997-1000, 1005-1008, 1026-1028, 1030-1031, 1040-1048
Input bias current, 845, 850, 865-866, 869, 873
Input capacitance, 381, 798, 806
Input impedance, 837, 857, 874, 881, 887, 928, 930, 950, 955-957, 962, 975, 986
Input line voltage, 730
Input offset current, 845-846, 850, 865-866, 869, 873
Input offset nulling, 850
Input offset voltage, 845, 851, 860-861, 865, 873, 951
Input offset voltage drift, 845
Input power, 98-100, 105, 112, 338, 620, 786, 791, 820-821, 826, 1042, 1045
Input resistance, 248, 274, 277, 281, 510-511, 771, 781-782, 784-785, 794, 798, 804-806, 818, 820-821, 823, 826-827, 837-838, 845-846, 854-860, 864-867, 873, 884, 940, 975, 1045
Input resistor, 854, 860, 862, 865, 882, 885-886, 888, 890, 924, 950
Instance, 998
instantaneous values, 347-348, 355, 375, 424, 533
instrumentation, 254, 543, 738, 927-932, 955-958, 962-963, 975-976, 980, 982, 1004, 1035, 1044
Instrumentation amplifier, 927-932, 955-956, 958, 962-963, 975-976, 980, 982, 1004, 1044
Instruments, 11, 13, 16, 34, 39, 47, 55, 58, 104, 156, 229, 251, 273-275, 341-342, 346, 381, 497, 586, 691-692, 798, 957, 1024, 1034-1037, 1048
insulators, 28, 66, 299, 707
  types of, 28
Integer, 123, 146, 182, 387
Integrated circuit, 28, 703, 728, 732, 738, 750, 753, 877-878, 913, 934, 978, 998, 1043-1044
Integrated circuit (IC), 703, 732, 753, 1044
  7800, 732
Integrated circuit regulator, 732
integrated circuits (ICs), 440, 835-836
integration, 659, 836, 885, 1026, 1035
Integrator, 659-671, 676-679, 681, 683, 685-690, 692-699, 877, 885-887, 889-891, 894-896, 915-917, 919, 923, 1024-1026, 1044, 1048
Integrity, 302
Interfacing, 854, 936, 956, 969
Intermediate frequency (IF), 144, 648
Internal resistance, 92, 247-249, 256-257, 260-261, 263, 265-268, 277, 281, 291-292, 330, 428, 442, 494, 543, 632, 681
Interpole, 330-331
Interrupt, 996
Intrinsic, 703, 705, 707-709, 752-753, 762, 1042, 1044
Intrinsic crystal, 705
Intrinsic semiconductor, 703, 707, 709, 753, 762, 1044
Inverse tangent, 462
Inversion, 777, 781, 856, 867, 892, 1029
Inverting amplifier, 835, 852, 854-857, 859-860, 862, 865-867, 939, 948, 952, 998, 1044
Inverting input, 836, 851-853, 855-856, 859, 865, 878-879, 881, 886-887, 889, 894, 896, 908, 915-916, 945, 950-952, 975, 998-999, 1030, 1044
Ion, 27, 29-30, 34, 64, 711, 764, 1044-1045
Ionization, 25
Irradiance, 741
Isolation, 483, 927, 932-937, 952-958, 963, 973, 1001-1002, 1042, 1044
Isolation amplifier, 927, 932-937, 952-958, 963, 973, 1001, 1044
Isolation barrier, 933-934

J

JFETs, 768, 794-795, 798, 802, 819
  n-channel, 794-795, 798, 802, 819
Joule (J), 77, 105, 1042, 1044
Jump, 705, 707
Junction, 35-36, 62, 193-194, 197, 199, 213, 477, 573, 703, 710-715, 735, 738-739, 741, 752-753, 755-756, 762, 764, 768-771, 773-777, 782, 794-796, 798, 802, 804, 816, 818-820, 822-823, 829-831, 833, 848, 910, 968-970,

www.EngineeringBooksPdf.com

972-973, 1000-1001, 1040-1041, 1047-1048
Junction capacitance, 738
Junction field-effect transistor (JFET), 794, 818
Junction temperature, 711, 713, 764

K

Kelvin, 8, 705, 977
Key, 1-2, 5-6, 17, 24-25, 65, 77, 105, 128, 136, 157, 178, 183-184, 213, 226, 276, 313-314, 321, 334, 345, 356, 386, 424, 445, 547, 591, 649, 692, 708, 753, 819, 849, 962
Kilo (k), 20, 82
Kilowatt, 77, 88-90, 105-106, 111-113, 1044
Kilowatt-hour (kWh), 77, 88, 105, 1044
Knee, 736, 776

L

Lag circuit, 459, 463, 469-471, 473, 489-490, 503-505, 508, 510, 566-569, 581, 590-591, 595, 891-892, 894, 919, 1046
Language, 186, 1044, 1046
Large-signal voltage gain, 847
Laser, 315-317, 930
Latch, 850
Latch-up, 850
LCD, 58, 74, 378
Lead circuit, 459, 463, 471-473, 490, 503-504, 508, 568-569, 590-591, 595, 891-892, 1046
lead-acid batteries, 32
Leading edge, 370-371, 1044
leading power factor, 486, 512
Lead-lag circuit, 891-892, 894, 919
Leakage, 403, 407, 411, 414, 421, 423, 436-437, 445, 496-497, 510-511, 514, 516, 741, 775, 792, 798, 804, 932, 936, 1007
Leakage current, 407, 414, 496, 741, 775, 792, 798
LEDs, 58, 703, 735, 740-741, 756, 763
Left-hand rule, 306, 333
Level sensor, 144
Library, 41, 87, 89, 136, 321, 1023-1024, 1035
Light intensity, 741, 984
Light-emitting diode, 130, 739, 753, 1044
Light-emitting diode (LED), 130, 739
Lighting system, 186
Limiter, 16, 910, 927, 944, 947-948, 956-957, 961-962, 1044
  biased, 944, 947-948, 1044
Limiters, 756, 947, 955
Limiting circuit, 910, 944, 948, 950, 963
Limiting resistor, 82, 132, 738
Line regulation, 703, 734, 752-754, 759, 763, 905-906, 913-914, 923, 1044
Linear, 46-47, 69, 77, 80, 82, 105, 143, 146, 265, 269, 292, 313, 373, 750, 774, 779, 786-787, 792, 817, 822, 835-836, 851-852, 864, 886-887, 891, 907, 910, 948, 972-973, 977, 1001, 1019, 1031
Linear region, 774, 779, 786-787, 822, 852
Linear regulator, 910
Linear variable differential transformer (LVDT), 983
Linearity, 972, 978, 983
Lines of force, 29, 298-300, 305-306, 323, 333-334, 339, 406, 408, 518-519, 1042
Load, 24, 32, 35, 38-39, 48-49, 64-65, 71, 73, 97, 99-100, 105-106, 111-112, 115, 132, 136, 193, 195, 207-209, 229, 242-247, 253-256, 259-264, 273-278, 281, 283, 287-288, 291-293, 321, 328, 330-331, 338, 367, 369, 438-439, 505, 511-512, 542, 579-581, 592-593, 641-644, 654, 722-723, 727-735, 738, 752-754, 758-759, 762-763, 773, 790, 807, 822, 829, 837, 905-910, 912-916, 922-923, 950-951, 957, 959, 994, 996-998, 1003, 1020-1022, 1040-1044, 1046-1048
Load balancing, 581
Load cell, 253-254, 291, 1044
Load current, 105, 229, 244, 246, 262, 276, 583, 732-734, 744, 753, 758, 762-763, 826, 906-910, 922-923, 950, 997, 1041, 1044, 1047
Loading, 11, 100, 229, 243-244, 247-249, 276-278, 281, 291-292, 381, 389, 442, 490, 500-501, 564, 631, 637-638, 641, 749, 771, 784, 802, 833, 945, 948, 1044
Loading effect, 229, 243-244, 247-249, 276-278, 281, 291-292, 442, 490, 500-501, 637, 771
Local oscillator, 647
Lockout/tagout, 15-16
Logarithm, 445, 649, 1042
Logarithmic, 491, 493, 619, 649, 976, 1042
Logarithms, 424
  graphs, 424
Logic, 97, 145, 186-187, 1044, 1046
Loop, 135-136, 157-158, 324-326, 329, 338-339, 363-365, 392, 518, 521, 543, 808-810, 817, 819, 821, 831, 835, 845, 847-848, 850-856, 858-862, 864-867, 869-871, 892-894, 897, 908, 914, 916-918, 920, 923, 929-930, 945, 948, 1041, 1044-1045, 1048
Loop gain, 808-809, 821, 831, 847, 850-854, 856, 858-862, 865, 867, 869-871, 873-874, 878, 892-893, 914, 918, 920, 923, 929, 1045
Lower trigger point (LTP), 895
Low-pass filter, 490, 506, 510, 646, 660, 686, 899, 902-905, 952, 973, 980, 1025, 1030
low-pass filters, 897, 899

M

magnetic circuits, 307, 309-310
  permeability, 307
  relative permeability, 307
  reluctance, 307, 309-310
Magnetic disk, 311, 315
Magnetic field, 36, 51-52, 298-300, 302-308, 312, 314-325, 327-331, 333-337, 339, 363-369, 386-387, 518-522, 527, 531, 540, 544, 546-548, 578, 633, 679, 985, 1042-1047
Magnetic field intensity, 298, 317-319, 334-335, 1044
Magnetic flux, 8, 298-300, 302-303, 305, 315, 317, 320, 322-325, 330, 334-336, 338-339, 544, 1041, 1043-1044, 1048
Magnetic flux density, 299-300, 302-303, 305, 317, 320, 323, 334-336, 339, 1044
magnetic flux lines, 315, 324-325, 334, 1044
Magnetic hysteresis, 298, 317-318, 337, 339
Magnetic pole, 324
Magnetic switch, 299, 304
Magnetizing force, 317, 335, 337, 339, 1044, 1046
Magnetomotive force (mmf), 298, 308, 334-335
Magneto-optical disk, 311, 315-316
Magnitude, 29, 308, 347-348, 356-357, 368, 370, 398, 461-462, 464, 468, 470-473, 477, 490, 559, 567, 569, 573, 581, 607, 610-611, 613-614, 631-632, 649, 890, 1044-1045
Majority carrier, 703, 714, 752-753, 762, 1044
Mark, 58, 60, 209, 1029
Mean, 148, 349, 387, 786, 989, 1042, 1046
Measured numbers, 1, 11, 20
Mega (M), 20, 82
Memory, 34, 319, 379, 441, 998
  dynamic, 441
  magnetic, 319
Meter movement, 149, 208-211, 311, 314, 317, 337, 339
Meter symbols, 55-56
Metric prefixes, 1, 5, 7-10, 17, 19-20, 82, 87-88
Metric unit conversions, 1, 9, 19-20
Mho, 40, 802
mica capacitors, 409-410
Microcontroller, 994, 998, 1044
Microphone, 984
Microprocessor, 863, 998, 1044
Microstrain, 980
Mil, 52, 66, 406-409, 454, 1041
Milli (m), 20
Minority carrier, 703, 713, 753, 1044
Minority carriers, 708-709, 713-714, 754
Mixer, 647
Modulation, 330, 383, 647, 739, 933-934, 941-942, 1044
  amplitude, 647, 933-934, 941-942, 960, 1044
Modulator, 583-584, 739, 933, 941-942
Motion measurement, 968, 983, 1007
Motor action, 323, 328
Multimeter, 55-56, 59-61, 65, 69-70, 83, 102, 129-130, 141, 150, 166, 190, 236, 247-248, 261, 277, 498, 1037, 1042
Multiple-source, 265, 269, 292
Multiplexer, 1003
Multiplication, 4, 714
Multiplier, 43-46, 414, 1012-1015, 1025
Multisim, 63, 83, 85, 114, 129-130, 133, 137-138, 141-143, 151, 157, 169, 189-191, 196, 205, 224, 236-238, 240, 242, 244, 246, 270-272, 275, 290, 339, 385, 396, 454, 477, 482, 484, 502, 530-531, 533, 546, 553, 562, 567, 569, 576-577, 598, 612, 625, 633, 637, 643-644, 655, 761, 830, 856, 880, 882-885, 903, 922, 962, 1033-1038
  resonance, 612, 614, 616, 622, 625, 633, 637, 643-644, 655
mutual inductance, 1045

N

Nano (n), 20
Natural, 35, 363, 424, 445, 520, 686, 985, 1044
natural frequency, 985
Natural logarithm, 445, 1042
Natural logarithms, 424
Negative charge, 25, 28-31, 34, 65, 72, 708, 710-711, 1042, 1045
Negative feedback, 823, 835, 850-853, 856-857, 865-866, 869, 873, 878, 892-894, 897, 900, 908-909, 917, 923, 1041, 1045
Negative ion, 27, 30, 711, 764, 1045
Negative ramp, 374, 887
Negative temperature coefficient, 407, 414, 449, 817, 976, 1002, 1006
negative-going pulse, 370-371
Neutral atom, 29, 66
Neutron, 25, 1045
neutrons, 25, 66, 1045
Newton (N), 334
NI ELVIS, 1035-1038
Node, 62, 178, 193-197, 213-214, 218, 225, 230-232, 237-238, 243, 245-246, 253, 272, 788, 1044-1045
Noise suppression, 543-544
Noise voltage, 806, 852
Noninverting amplifier, 808, 835, 852-854, 856-857, 859-862, 865-867, 874, 892, 908, 1045
Noninverting input, 836, 850, 865, 879, 896-898, 901, 910, 915, 928-929, 940, 945, 949, 1045
Nonlinearity, 969, 977, 1002-1003
Nonsinusoidal waveforms, 341, 370, 392, 398
Nonzero-level detection, 878-879
NPN transistor, 772, 787, 817, 822
n-type semiconductor, 708-709, 752, 755, 762
nucleus, 25-28, 66-67, 72, 704, 706, 1045, 1047
Null, 860-862, 874
Nyquist rate, 992, 1000, 1045

O

Offset null, 860-862
Offset nulling, 850
Offset voltage, 845-846, 851, 860-862, 865-866, 873, 951
Ohm ( ), 24, 65, 72, 536, 1041, 1045-1046
Ohmmeter, 24, 55-57, 64-65, 70, 73, 92, 94, 103-104, 107, 112, 125, 152, 161, 173, 191, 206-207, 220, 498, 545, 715
ohms, 8, 18-19, 40, 43-45, 52, 54, 58, 60-61, 66, 69-70, 74, 79-80, 82, 84-86, 104, 111, 167, 247, 423, 431, 433, 445, 513, 527, 537, 559, 590, 806, 1043, 1047
Op-amp, 807, 835-839, 844-869, 871, 873-875, 877-925, 927-965, 971-972, 975, 981, 986, 993, 998, 1000, 1004, 1041-1042, 1044-1045, 1047-1048
Open circuit, 24, 48-50, 55, 64-65, 73, 152, 156, 159, 203, 260-261, 292, 497, 585, 1002, 1045
open circuits, 49
Open diode, 744-746, 748, 763
Open input, 862
Open-loop voltage gain, 835, 845, 847-848, 856, 864-866, 873
Operational amplifier, 835-875, 1045
Operational amplifier (op-amp), 835, 865, 1045
Operational transconductance amplifier (OTA), 927, 937-938, 955-956, 1045
Orbit, 25-27, 64, 72, 1045, 1047-1048
Oscillation, 732, 807-811, 821, 829, 831, 892-895, 916, 920
  conditions for, 807-809, 831, 892-893
Oscillator, 341-342, 346, 387, 433, 489-490, 495, 647, 754, 768, 807-813, 819-822, 829, 831, 877, 891-897, 914-917, 920, 933, 937, 1025, 1045-1046, 1048
  Colpitts, 807, 810-813, 819, 821, 831
  feedback, 387, 489, 768, 807-813, 819-822, 829, 831, 891-894, 897, 914-915, 917, 963, 1045, 1048
  Hartley, 807, 811, 813, 819, 821, 831
  phase shift, 489-490, 495, 807-811, 819, 831, 892-893, 917, 1046

www.EngineeringBooksPdf.com

phase-shift, 810, 831, 892
RC phase-shift, 810, 831
relaxation, 877, 891, 896-897, 915, 923, 1046
sawtooth, 341
sinusoidal, 341-342, 346, 387, 807-810, 819, 892, 915
square-wave, 895-897, 933, 963
triangular wave, 896
triangular-wave, 877, 891, 894-895, 915-916, 1048
Wien-bridge, 877, 891-894, 897, 914-915, 920, 1048
Wien-bridge oscillator, 877, 891-894, 897, 914-915, 920, 1048
Oscillator circuits, 342, 433, 489, 807
Oscillator operation, 807
Oscillator start-up, 893
Oscilloscope, 341, 354, 375, 377-381, 383, 385, 387, 393-394, 396, 398, 402, 442-444, 482-484, 498, 502, 512, 545, 586, 592, 598, 648, 667, 689, 692, 697, 715, 726, 728, 814-816, 1027-1028, 1036-1038, 1045
analog, 375, 377-378, 383, 398, 1027-1028, 1036, 1045
digital, 377-379, 381, 383, 398, 498, 586, 659, 1037, 1045
oscilloscopes, 92, 375, 377-378, 381
ground, 92
input capacitance, 381
OTA, 927, 937-943, 955-957, 959-960, 963, 1045
Output, 36, 39, 65, 97-100, 103-106, 112, 133-134, 144-145, 156-158, 163, 167, 202, 209, 211, 242-244, 246, 250-262, 273-276, 278, 281-282, 287, 291, 295, 315, 323, 325, 328-329, 335, 338-340, 351, 363-367, 381, 383-384, 386, 388, 392, 395, 397, 442, 444, 469-473, 483, 489-491, 495, 497-498, 503-505, 510-511, 514, 566-569, 581-584, 586, 588, 590-592, 595-597, 617-620, 623-625, 638-644, 648-650, 656, 659-686, 688-700, 719-728, 731-735, 738-740, 742-745, 752-756, 758-760, 763, 768, 776-781, 786-791, 804-810, 813-823, 825-826, 831, 835-838, 840-869, 871-874, 878-885, 887-898, 905-910, 912-924, 928-929, 931-938, 940-943, 945-949, 951-963, 970-971, 973-978, 982-990, 997-1000, 1024-1028, 1030-1031, 1036, 1038, 1040-1048
Output admittance, 806
Output error voltage, 865-866
Output impedance, 837, 857, 874, 928, 937, 955, 962
Output power, 97-100, 105-106, 112, 133-134, 620, 650, 786-787, 790-791, 820-821, 826, 1042-1043, 1045
Output resistance, 262, 837, 845, 847, 854, 857-859, 864-867, 873, 907, 940, 1045
Overload protection, 905, 910
oxidation-reduction reaction, 32, 64

P

Package, 332, 732-733, 750, 836, 860-861, 864, 940, 952, 978, 981-982
Parallel circuit, 178-179, 181-182, 185-191, 193, 197-201, 203-204, 206-207, 213-215, 217-218, 220-225, 230, 235, 238, 259, 265, 275-276, 433, 473, 476, 478-479, 485, 509, 584-585, 629-631, 638, 651, 1041-1042, 1044
capacitive, 433, 473, 476, 479, 485, 509, 630, 651, 1041
inductive, 629-630, 651
resistive, 178-179, 213, 230, 235, 276, 433, 485, 509
RLC, 629-631, 638, 651
Parallel connection, 33, 56, 185
parallel current sources, 1021
parallel resistors, 178-179, 181-182, 185, 187-188, 192, 198-199, 208, 214-216, 218-219, 224, 229, 235, 277, 280, 415, 538
combination, 181, 192, 235, 277, 280
current through, 198-199, 218, 280
total resistance, 178, 182, 185, 187, 192, 214, 216, 224, 235, 277, 280, 415, 538
Parallel resonance, 603, 630-632, 634, 638, 649-650, 654, 656, 812, 1045
parallel resonant circuits, 634, 638, 647
quality factor, 634
Pass transistor, 910
Passband, 617-618, 620, 647, 904, 1045
PBX (private branch exchange), 1028
peak amplitude, 721
Peak detector, 944, 949-950, 956, 962-963
Peak inverse voltage, 719, 722, 724-725, 727, 731, 753-755, 913, 1045
Peak inverse voltage (PIV), 719, 722, 724, 727
peak value, 341, 347-350, 356-358, 360-361, 381, 386-391, 393, 395-396, 439, 592, 692, 719, 721-722, 724, 727-728, 731, 752, 758, 778, 804, 916, 918, 948-949, 957, 962-963, 1027, 1040, 1045-1046
peak-to-peak value, 341, 347-348, 381, 387, 389, 804, 918, 1045
Pentavalent, 708-711, 752, 762, 1045
Pentavalent atom, 708, 711
Percent regulation, 734
Period, 34, 87, 89-90, 112-113, 341-347, 364, 372, 374, 381, 386-388, 390, 393, 395-397, 403, 414-415, 419, 423, 428, 430, 483-484, 531, 533, 659, 666-667, 691, 696, 731, 944-945, 985-986, 992, 1042, 1045
period (T), 341
Periodic, 26, 329, 341, 371-372, 386-387, 489, 666-667, 670, 675, 677, 695, 1025, 1042-1043, 1045
permanent magnets, 299, 303-304, 309, 319, 325, 335, 365
Permeability, 298, 305-308, 334-335, 337, 519-520, 547, 550, 553, 1045
relative, 307-308, 334-335, 337, 1045
Permittivity, 408, 446
Phase, 15, 341, 351, 353-357, 359, 365-369, 386-389, 391-392, 400, 429, 435, 437, 459-474, 476-490, 494-495, 497, 502-505, 507-514, 516, 540, 542, 544, 557-570, 572-577, 579-581, 590-592, 594-595, 597-599, 603-611, 613-614, 616, 625-629, 631-632, 636-637, 649-652, 656, 743, 747, 807-811, 819, 823, 831, 850, 865, 892-893, 996, 1044-1046
Phase angle, 353-356, 386, 389, 391, 459-469, 471, 473-474, 476-490, 503-505, 507-511, 513, 557-570, 572-576, 579-581, 590-592, 594-595, 598-599, 603-607, 609, 616, 625-628, 631, 636, 649-652, 656, 850
Phase control, 996
Phase inversion, 781
Phase relationship, 435, 437, 478, 540, 542, 841
Phase shift, 353-354, 429, 460-461, 469, 471, 489-490, 494-495, 497, 503, 505, 512, 516, 558, 566, 568, 591, 597, 807-811, 819, 831, 892-893, 1046
Phase-shift oscillator, 810
phasors, 461, 477, 486, 631
Photoconductive cell, 951, 1045
photoconductive cells, 47
Photodiode, 703, 735, 741-742, 749-753, 756, 759, 763, 1045
Photodiodes, 703, 735, 741, 754, 763
Photon, 27, 756, 1045
Photons, 739, 1045
Photosensitive, 86, 985
Photovoltaic effect, 35, 1045
Pico (p), 20
Piezoelectric effect, 36, 811, 1045
Pins, 16, 69, 122, 157, 161-162, 169, 180-181, 187, 206, 216, 223-224, 860, 931, 1028
PIV rating, 725-728, 758-759
PLL, 1029
PNP transistor, 770, 822
Pointer, 55, 60-61, 70, 208, 212, 314-315, 337
Polarization, 316
Pole, 49-50, 104, 210-211, 299-300, 302-304, 311-312, 320, 327-328, 332, 334, 336, 338, 364-365, 392, 518, 897-905, 914-917, 923, 1044-1045
Poles, 298-300, 302-305, 310, 314, 327-329, 333-335, 338-339, 363-365, 392, 397, 898, 920, 1044
Port, 312, 981, 1023, 1028
Positive charge, 27, 29, 64, 710-711
Positive feedback, 387, 807-809, 819, 823, 831, 892-893, 914, 917, 1045
Positive ion, 27, 29-30, 711, 1045
Positive temperature coefficient, 282, 407, 414, 449, 969, 1000, 1006
positive-going pulse, 370-371, 376, 393
potential difference, 31-32, 35, 64, 66, 135, 712
potential energy, 31-32
potentiometers, 46-47, 67
Power, 1-8, 13, 15-20, 34-36, 39, 42, 51, 58, 66, 72, 77-118, 119, 131-134, 145-149, 156-159, 164, 167, 171, 174, 178, 186, 201-203, 208-215, 219-220, 223, 227, 242-243, 262-264, 268, 270, 273-278, 283, 292, 305, 316-317, 327-328, 330, 334-336, 359-360, 365-368, 370, 383, 423, 435-440, 445-447, 452, 483, 497-498, 510-512, 540-544, 578-581, 583, 590-593, 613, 617, 619-621, 637, 649-650, 653-654, 690, 723, 728-730, 732-735, 741-745, 747-753, 756, 759, 763, 773, 782-783, 785-787, 790-791, 814, 819-822, 826, 829, 837, 842-843, 860, 863-864, 867, 912-913, 932, 934, 955-957, 963, 994, 996-998, 1006-1007, 1036-1037, 1040-1048
alternators, 342, 365-368, 386
apparent, 354, 459, 485-489, 503-505, 510-512, 578-580, 590, 592-593, 596
control circuits, 178, 186, 994, 1003, 1006-1007
instantaneous, 355, 370, 402, 423, 429, 436, 446, 536, 541, 1001, 1043, 1046
maximum power transfer, 229, 262, 264, 276, 283, 292, 1044
motor ratings, 330
polyphase, 354
ratio, 98, 105, 328, 386, 542, 547, 613, 619-621, 649-650, 654, 747, 791, 820, 822, 842, 847, 913, 956, 1040-1043, 1045-1046, 1048
reactive, 402, 429, 436-437, 446-447, 452, 459, 485-489, 503-505, 510-512, 536, 541-542, 547-548, 552, 578-580, 590-593, 596, 613, 621, 690, 1045-1046, 1048
true, 7, 17, 20, 66, 106, 116, 156, 171, 277, 335, 402, 429, 436-437, 445-447, 452, 485-489, 510-511, 514, 541-542, 547-548, 578-580, 583, 590-593, 613, 621, 728, 741-742, 763, 963, 1001, 1042, 1045-1046, 1048
utility, 15, 97, 105-106, 113, 1044-1045
Power amplifier, 262
Power control, 690, 1001
Power density, 34
Power dissipation, 91, 94, 99, 106, 111, 113, 214-215, 227, 486, 489, 514, 580-581, 599, 837, 912
Power factor, 459, 485-487, 489, 503-505, 510-512, 578-581, 590, 592, 596, 1045
Power factor correction, 578, 580-581
Power gain, 768, 782-783, 785-786, 820-822, 1045
Power measurement, 58
Power of ten, 1-8, 17-20, 1042, 1044-1045, 1047
Power rating, 77, 89, 92-95, 105-107, 111, 115, 162, 167, 328, 487, 912, 922
power supplies, 16, 36, 39, 77, 97-98, 112, 115, 145, 268, 350, 581, 728-729, 732, 735, 742-743, 759, 763, 907, 1036-1037
Power supply, 13, 36, 39, 72, 77, 97-100, 105-106, 112, 133-134, 148-149, 164, 178, 208-212, 215, 223, 273-274, 283, 340, 437-439, 445, 452, 544, 583, 723, 728-730, 732-734, 742-745, 749-753, 756, 798, 814, 822, 860, 863, 907, 913, 934, 981, 1006, 1041-1042, 1045-1046
Power supply filter, 437-439, 452, 728, 753, 1041
Power supply transformer, 747
Power transistor, 907-908
power triangle, 485-486, 510, 578, 580, 596
powers of ten, 2, 4-5, 7-9, 17
Practical applications, 262, 519
Practical op-amp, 836-838, 845-846, 864, 867, 874
Precision, 1, 11, 13, 17, 36, 44, 56, 58-59, 66, 145, 251, 849, 930, 1045
Precision resistors, 44, 210
Pressure measurement, 981-982
Pressure sensor, 981
Pressure transducer, 978, 981-983, 1000, 1002, 1008
Primary battery, 34
Primary winding, 725, 747, 749, 983, 1041, 1045, 1048
Printed circuit board, 158, 206, 234, 411, 442, 750, 999, 1046
Priority encoder, 993
Probe, 36, 378-379, 381, 383, 398, 442-444, 483, 498-499, 502, 512, 598, 697, 817, 984, 1027, 1031, 1036, 1045
Probe compensation, 381
Procedure, 15-16, 56, 77, 102-105, 156, 183-184, 187,

www.EngineeringBooksPdf.com

204-205, 223, 298, 333, 354, 483, 596, 748, 813-814, 1043
Process control system, 817-818
Product, 2, 29, 34, 58, 65, 90, 97-98, 105, 184, 214, 372, 423, 432-433, 446-447, 473, 505, 538-539, 541, 569-570, 782, 785, 808, 820, 935, 1040-1041, 1045-1046
Product-over-sum, 214, 432-433, 447, 473, 538-539, 548, 569-570
Programmable logic, 186, 1046
Programming, 186, 1023-1025, 1035, 1044, 1046
Proton, 25, 29-30, 64, 1046
Proximity detector, 984
p-type semiconductor, 708-709, 752, 762
Pulse, 315, 330, 341, 346, 370-372, 375-377, 380, 383-384, 386-389, 392-396, 398, 428, 543, 546, 583-584, 599, 659-688, 690-695, 697-699, 848-849, 887, 933-934, 986, 988, 995, 997, 1007, 1027, 1040, 1042-1044, 1046, 1048
Pulse repetition frequency, 372, 387, 1046
Pulse response, 671, 678
Pulse waveform, 370, 372, 375-377, 383-384, 386, 388-389, 392-394, 396, 666, 670, 675, 677, 686, 694-695, 1040, 1042
Pulse width, 330, 341, 370-372, 376-377, 386-387, 389, 394, 398, 583-584, 599, 661-666, 668-670, 672, 674-679, 681, 683-684, 688, 692-694, 806, 933, 988, 1042, 1044, 1046
Pulse width modulation, 330
Pulser, 207
Pulse-width modulation, 933-934
Push-pull, 786-789, 791, 826, 831, 835, 837-838, 873, 1046
Push-pull amplifier, 786-788, 791, 826, 835, 837, 873
Pythagorean theorem, 462, 577

Q

Q, 8, 29-31, 38, 66, 72-73, 96, 117, 169, 404-405, 415-417, 419, 423, 430, 435, 446, 449, 517, 542, 547-548, 612-614, 617, 621-622, 629-632, 634-638, 641-644, 649-651, 654-656, 768, 773, 776, 779, 791, 803-804, 816, 820, 824, 830-832, 862, 1014, 1025
Q-point, 768, 773, 776, 779, 786, 789, 791, 803-804, 816, 820, 824, 830-832, 1046
Quadrant, 715, 995
Quality, 11, 517, 542, 547-548, 612, 617, 621-622, 629, 634-635, 646, 649-650, 1046
Quality factor (Q), 517, 542, 547, 617, 621, 649, 1046
  coil, 517, 542, 547, 621
Quantization, 968, 989-992, 994, 1000-1001, 1003, 1046
  error, 989-992, 994, 1000, 1003, 1046
  noise, 1003
Quantization error, 989-992, 994, 1000, 1003, 1046
Quartz, 36, 807, 811-812

R

Radian, 341, 351-352, 386-388, 1046
Radian/degree conversion, 352
Radio frequency (RF), 544
Rail-to-rail, 849
Ramp, 341, 373-375, 387, 887-890, 894-895, 914-916, 1046-1047
Ranging, 47, 81, 167, 346, 410-411, 736
Rate of change, 321-322, 334, 338, 386, 430, 434-435, 521, 536, 540, 548, 659, 848, 885-890, 915-916, 919, 923, 984, 1024, 1042-1043
RC circuit, 423-424, 428, 444, 446, 459-463, 465, 467-469, 473, 475-481, 485-486, 489-495, 500, 502-505, 507, 510, 527, 533, 558, 560, 581, 583, 660-661, 666, 670, 692, 698, 886, 897-898, 900-901, 914, 923, 1045-1046
RC filter, 500-501, 897
Reactive load, 487
reactive power, 402, 429, 436-437, 446-447, 452, 485-489, 503-505, 510-512, 536, 541-542, 547-548, 552, 578-579, 590-593, 596, 613, 621, 1046, 1048
Read, 8, 42, 55, 60-61, 74, 104, 187, 217, 272, 284, 294, 311, 315-316, 383, 484, 588, 644, 1014
Read/write head, 315
Real time, 377
Receiver, 84, 144, 440, 603, 633, 645-648, 739
Recombination, 705-706, 711, 713, 739, 755-756, 764, 774
Rectifier, 209-211, 438-439, 703, 716, 719-736, 741, 744-749, 752-756, 758-760, 763-764, 913, 947, 968, 994, 1001, 1025, 1030-1031, 1043
  full-wave, 438-439, 703, 719, 722-729, 735, 744-748, 752-756, 758, 760, 764, 913, 1030, 1041, 1043
  half-wave, 438, 703, 719-722, 728-731, 744, 746, 748, 752-756, 758, 760, 763, 1043
  silicon-controlled, 994, 1001, 1047
Rectifier diode, 719, 735-736, 741, 947
Rectifiers, 703, 719, 729, 758, 762
Reference ground, 54, 119, 148-151, 158, 1041, 1046
Reflected load, 1046
Reflected resistance, 1046
Reflection, 345
Refraction, 345
Regulation, 703, 728-729, 732-736, 738, 752-754, 759, 763, 905-907, 909-910, 913-914, 916, 923, 998, 1044
  line, 703, 728, 734-735, 752-754, 759, 763, 905-906, 913-914, 923, 1044
Regulator, 209-212, 273, 366, 581, 583-584, 599, 703, 728-730, 732-735, 744-745, 747-748, 750, 753, 759, 905-916, 921-923, 1046-1047
  adjustable, 733
  three-terminal, 732-733, 735, 908, 911, 914, 1047
Relative permeability, 307-308, 335, 337
Relative permittivity, 408, 446
Relaxation oscillator, 877, 891, 896-897, 915, 923, 1046
Relay, 298, 311-313, 317, 332-334, 337, 339, 685, 1046
Reluctance, 298, 305, 307-310, 315, 318, 322, 334-337, 339-340, 369, 519, 1046
Repetitive pulses, 371, 659, 666, 675, 677, 682, 694-695, 698
Reset, 16, 50, 52, 73, 512, 1034
Resistance, 2, 8, 14-15, 18, 23-75, 77-84, 86-87, 90-96, 100-108, 110-115, 118, 119, 121-126, 128-131, 139-141, 143, 145-147, 152-154, 157-159, 161-163, 166-171, 175, 180, 182-187, 190-192, 195, 198-201, 203-204, 206-218, 220-225, 233, 235-245, 247-270, 272, 274-278, 280-282, 285-287, 291-292, 307-308, 327-328, 330-331, 336, 338-339, 349, 360, 363, 407, 415, 428, 431-434, 436, 439, 441-442, 444-446, 448, 459-463, 470, 474-475, 479, 485, 493-494, 496-497, 501, 503-505, 510-511, 513-514, 517-518, 520-523, 525-528, 533, 538-543, 545-550, 552-553, 557-560, 570, 578-579, 582-583, 586, 588-590, 610-611, 617-618, 621-622, 624, 627-632, 634-638, 641-644, 649-651, 653-656, 664-665, 689, 692, 712, 731, 734-735, 737, 739, 747, 753, 763, 784-785, 794-795, 798, 804-807, 816-818, 820-821, 825-827, 830, 837-838, 845-847, 854-860, 864-867, 902, 905-907, 922, 939-940, 950-951, 959, 969, 972-981, 1018-1021, 1041-1048
  photoconductive cell, 951, 1045
  thermistors, 47, 145, 817, 969, 976-977, 980, 1000, 1002
  voltage-controlled, 739, 794, 939
Resistance measurement, 206
Resistance temperature detector (RTD), 969, 1000
Resistive load, 71, 86, 242, 487-488, 641
Resistor, 13, 20, 24, 40-48, 56-57, 64-68, 70-72, 75, 77-80, 82, 84-86, 92-96, 103-111, 113, 115, 120-123, 125-132, 135-136, 138-141, 143, 146-147, 149, 152-154, 156-168, 170-171, 173-175, 180-185, 188-192, 196-211, 213-221, 225, 227, 232-233, 237-238, 240, 242-247, 249-250, 252, 257, 259-261, 269-271, 273-274, 283-286, 288, 290-292, 294-295, 338, 349, 359-362, 403, 407, 422-423, 433, 436, 440, 448, 460-461, 465-467, 469, 473, 477-478, 480, 485, 490-491, 497-500, 502-503, 505-507, 514, 530-531, 533, 535, 539, 562-563, 566-569, 583-588, 599, 613-614, 632, 634, 637, 643-644, 654, 657, 668, 670-677, 688-689, 699, 715-716, 723, 752, 756, 764, 771, 780-782, 784, 804-805, 814-817, 823, 854-855, 860-862, 865-866, 885-890, 902, 910, 923-924, 942-943, 955-957, 1009, 1020, 1044-1048
  carbon-composition, 41
  chip, 41-42, 1044
  film, 41-42, 93-95, 115, 973
  metal-film, 93-95, 115, 973
  power rating, 77, 92-95, 105-107, 111, 115, 162, 167, 912, 1045
Resistor color code, 43-44, 48, 109, 498, 586
Resistor failure, 92
Resistor network, 41-42
Resolution, 59, 61, 74, 968, 989-990, 1001, 1046
  ADC, 968, 989-990, 1001, 1003
Resonance, 303-304, 603-658, 812, 1045, 1047
  parallel resonant filters, 603, 638, 654, 656
  series resonant filters, 603, 617, 653, 656
Resonant circuit, 619-622, 631-633, 635-637, 639-641, 645-652, 654-656, 917, 984, 1040, 1046-1047
Resonant frequency, 603, 610-619, 622, 625, 631-633, 635-638, 640-642, 644, 648-655, 812, 892, 894, 897, 916, 919, 1046
Response curve, 459, 491-493, 502, 510, 581, 596, 618, 620, 623, 645, 648-649, 864, 891, 897-898, 900, 904-905
Retentivity, 298, 317-319, 335, 338-339, 1046
Reverse bias, 703, 710, 712-718, 738-739, 741, 752-754, 762, 770, 773, 794, 819, 830
Reverse breakdown, 703, 710, 714, 716, 735, 737, 752-754, 948, 1048
Reverse current, 713-715, 717-718, 735-737, 741-742, 751, 753, 755-756, 759, 763, 798, 802, 806, 1043, 1046
Reverse resistance, 718-719, 753, 1045
Reverse voltage, 712, 715, 722, 724-725, 727, 735-736, 738-739, 741-742, 753, 759, 763, 978, 995, 1045
Reverse-blocking region, 995
RF choke, 544, 554
RF chokes, 544
Rheostat, 24, 46-48, 62-63, 65-66, 73, 114, 130-131, 328, 335, 508, 864, 959, 1046
Rho, 53
Right triangle, 357, 461, 486, 1043, 1046
Ring, 17, 56, 324, 329, 364, 366
Ringing, 890
Ripple factor, 729, 731-732, 754
Ripple rejection, 732, 763
Ripple voltage, 402, 439, 446, 452, 729, 731, 735, 745-747, 752, 756, 761, 763, 1046
rise time, 341, 371, 376-377, 387, 398, 1046
Rising edge, 370, 670-674, 676-678, 680, 682, 684, 690, 1046
RL circuit, 527, 530-531, 533, 535-536, 546-548, 551, 557-565, 569-575, 578, 581, 583-585, 588, 590-594, 596, 598, 682
RL time constant, 517, 526-527, 529, 531, 534-535, 547, 1046
RLC circuit, 603-606, 608-613, 615-616, 623, 625-627, 629, 649-653, 1036-1038, 1045-1047
RMS, 15, 341, 347, 349-350, 359-361, 363, 383-384, 386-394, 397-398, 433, 436-438, 442-443, 452-453, 471, 498, 502, 505, 508-510, 513, 539-540, 542, 552, 567, 587, 599, 618, 624, 640, 724-725, 758, 778, 783, 785, 870-871, 1000, 1042, 1046
RMS value, 341, 347, 349-350, 360, 363, 383, 387, 389-394, 433, 452, 471, 567, 962, 1046
Roll-off, 898, 900-902, 904, 915, 1046
Rotor, 325, 327-329, 334, 336, 339-340, 351, 363-370, 386-389, 392, 397-398, 1040, 1043, 1046-1047
Round off, 1, 13, 17-18, 642, 1046
rounding off, 13
Round-to-even rule, 13, 18

S

Safety, 1, 14-17, 21, 54, 58, 93, 111, 956-957
Salt bridge, 32-33
Sample, 850, 907-908, 911, 968, 986-994, 1000-1001, 1003, 1005, 1007, 1025, 1036, 1040-1042, 1046
Sample-and-hold, 968, 986-994, 1000-1001, 1003, 1005, 1007, 1025, 1042, 1046
Sample-and-hold circuit, 968, 986-989, 991-994, 1000-1001, 1003, 1005, 1042
Sampling, 377, 989, 992, 994, 1000, 1045
Sampling theory, 989, 994, 1045
Saturation, 318-319, 756, 768, 773-776, 779, 789, 792-793, 815-816, 818, 820-822, 826-827, 831, 851, 873, 885
Saturation current, 789, 792, 821

www.EngineeringBooksPdf.com

Sawtooth, 341, 370, 373, 375-376, 378, 383, 386, 393, 715, 1047
Sawtooth waveform, 375, 378, 393, 1047
Scale factor, 251
Scaling adder, 877, 881, 884-885, 914-915, 917, 919, 1047
Schematic, 24, 40, 46, 48-51, 62-63, 65, 77, 101, 103-104, 120-121, 124, 127, 132, 134, 139, 143-145, 156-157, 167, 179-180, 188, 216, 223, 233-234, 239, 273, 285, 288, 313, 330-333, 403, 413, 442, 497, 512, 520-521, 523, 586, 733, 735, 770, 797-798, 818, 827, 911, 913, 952, 954, 1035-1037
Schmitt trigger, 943, 960
scientific notation, 1-5, 7, 12-13, 17-19, 1047
Secondary battery, 34
Secondary winding, 723, 725, 744-745, 747, 763, 1041, 1047-1048
Security alarm system, 298, 332
Seebeck effect, 36, 1047
Seebeck voltage, 969
Segment, 58, 315, 741
Selectivity, 441, 503, 544, 590, 603, 617, 620-621, 638, 641, 645, 650, 1047
Self-bias, 794, 798, 821
Self-excited generator, 327-328, 366, 1047
Semiconductor, 24-25, 28, 35, 65, 304, 334, 437, 688, 703-705, 707-709, 739-740, 752-753, 755, 762, 769, 794, 819-820, 981, 1001, 1040-1045, 1047-1048
  n-type, 704, 708-709, 739, 752-753, 755, 762, 794, 1045
  p-type, 704, 708-709, 739, 752-753, 762, 794, 1045
Semiconductor materials, 28, 740
sensing resistors, 42, 47
Sensitivity, 247-248, 253-254, 756, 976, 983, 1047
Sensor, 15, 47, 144-145, 305, 319, 322-324, 329, 336, 768, 817, 930, 972, 977-978, 981-984, 998, 1001-1002
series capacitors, 402, 415-416, 418, 431, 444-445, 447, 450, 452, 455, 538
Series regulator, 732, 877, 905, 907-910, 913, 915-916, 921, 923, 1047
Series resistance, 119, 122-123, 154, 157, 161, 170, 248-249, 275, 328, 419, 423, 479, 504, 628, 739
series resonant circuits, 631
Series-aiding, 119, 132-134, 149, 158, 1047
Set, 13, 16, 39, 41, 50, 55, 60-61, 69-70, 97, 107, 110, 113, 144, 159-160, 171, 194, 211-212, 215, 251, 258, 279, 307, 323, 328, 331, 384-385, 389, 395-396, 442-443, 446, 448, 482, 497-498, 508, 512, 530, 546-547, 592-593, 667, 691-692, 696, 733-735, 738, 760, 773-774, 776, 856, 863-864, 879-880, 884, 928-930, 948-949, 955-958, 968, 973, 1023, 1025-1027
Seven-segment display, 58
Shell, 25-30, 37, 72, 704, 706-707, 1047-1048
Shock, 1, 14-17, 39, 48, 56, 423, 743, 955, 997, 1042
Shock hazard, 14, 16
short circuits, 154
Short-circuit, 733, 806, 850, 910, 912, 1018
Short-circuit protection, 733, 850, 912
Shorted capacitor, 495-496, 498, 512, 514, 688-689, 699, 747-748
Shunt regulator, 877, 905, 910-913, 915, 922-923, 1047
Shunt resistor, 208-211
SI system, 8
Siemens, 8, 24, 40, 42, 65-66, 182, 206, 474, 503, 571, 591-592, 802, 1040-1041, 1043, 1047
Siemens (S), 24, 65, 182, 206, 474, 503, 571, 802, 1040-1041
Signal, 144, 253, 291, 313, 323, 342, 346-347, 361, 377-378, 380-381, 387, 391, 395-396, 398, 439-445, 489-490, 494-495, 500-502, 510-511, 530, 542-544, 589-590, 621, 632, 646-648, 696, 715, 731, 739, 750, 752, 773, 776-784, 786-789, 800, 802-806, 808-809, 813-816, 819-820, 823, 825-826, 830-833, 835, 839-844, 850-852, 861-863, 871-873, 878-880, 892-893, 916, 919-920, 927-928, 930-931, 933-935, 937, 941-942, 944-945, 954-957, 970, 989-992, 1000-1003, 1007, 1027-1031, 1038, 1040-1045, 1047
  periodic, 387, 489, 1042-1043, 1045
Signal conditioner, 973, 980, 1001-1002
Signal generator, 346, 589-590, 715, 1027-1028, 1030-1031
Signal tracing, 813
Significant digit, 1, 13, 17, 59, 1046-1047
significant figures, 202, 1012
Silicon, 28, 65, 703-712, 714, 733-735, 740, 753-756, 762, 764, 771, 796, 835, 910, 981, 994, 1001, 1047
Silicon carbide, 740
Silicon-controlled rectifier (SCR), 994, 1047
silver, 28, 34, 42-44, 48, 68, 72-73, 409-410, 1012
SIMM, 41
Simulation, 63, 1024-1025, 1027-1028, 1031, 1033-1038
Sine wave, 341-365, 372-373, 375, 381, 383-384, 386-397, 430-431, 434, 448, 460, 482, 498, 537, 587, 725, 753, 755, 832, 881, 933, 942, 948-949, 994, 1042-1043, 1045-1047
Sine wave formula, 341, 355-357, 391, 397
Single-ended, 835, 838, 840-844, 865, 873-874, 1047
Single-ended input, 838, 840-841, 843-844, 865, 873-874
Single-pole filter, 901
sinusoidal waveforms, 375
Slew rate, 845, 848-850, 865-867, 869, 873
Slip, 341, 363-370, 387-389, 397-398, 1047
Slip ring, 364
Software, 385, 546, 877, 1023-1025, 1028, 1030, 1034-1035, 1037-1038, 1042
Solar cell, 35, 66-67, 72, 85
solar cells, 35, 704
Soldering, 16, 50, 411
Solenoid, 298, 311-312, 317, 335, 337, 339, 1047
Solenoid valve, 311-312, 1047
Source, 15-16, 24, 29, 31-32, 35-36, 38-39, 48-49, 54, 57, 62, 64-67, 69, 71, 73, 75, 85, 91, 97-99, 101, 105-110, 112-113, 123, 126, 128-130, 132-140, 142-143, 145-147, 149, 152-153, 155, 157-160, 162-163, 173, 179, 182, 186, 188-189, 191-194, 199-200, 203, 206-207, 214-218, 221, 229-232, 240, 250, 254-258, 261-269, 271, 274, 276-281, 284-285, 287, 292, 309, 327-328, 359-361, 363, 368, 370, 388-389, 394, 397, 403-404, 414-416, 419-423, 429-430, 433, 435-437, 442-444, 446-447, 452, 460-461, 463-464, 466-467, 469, 477-478, 485-488, 494-496, 500, 514, 533, 541-545, 548-549, 558-564, 572-574, 578-580, 585-588, 590-594, 604-606, 616, 626, 641, 651-652, 662, 664-665, 699, 728, 764, 782, 794-800, 802-806, 818-823, 827, 829-831, 833, 920, 984-985, 1018-1022, 1040-1048
Source resistance, 262-264, 276, 278, 292, 442, 545, 634, 637, 641, 664-665, 681, 893, 920, 1043-1044
Source-follower, 805
Space, 221, 368, 383, 679, 977
Speaker, 70, 202, 262-263, 298, 311, 313-314, 335, 646, 648, 1047
Spectrum, 646, 863
SPICE, 1035
Spread, 483-484
Square law, 29
Square root circuit, 1025
Square wave, 372-373, 375-376, 381, 389, 393, 428, 530-531, 533-534, 545-546, 666-670, 677, 690, 692, 694-696, 874, 879, 942, 997, 1028
Squaring circuit, 879
Squirrel cage, 341, 369-370, 387, 398, 1047
Stability, 705, 811, 831, 865
Stack, 409
Stage, 439-440, 442, 813-815, 833, 835, 837-839, 845, 865, 873, 933-936, 956, 958-959, 1025, 1030-1031
Static, 29, 32, 798
Static charge, 798
static electricity, 29, 32
Stator, 327-329, 334, 336, 363, 365-370, 386-387, 389, 397-398, 1040, 1047
Steady-state, 667, 670, 675, 694-695
Step, 14, 16, 62-63, 100-104, 112, 152-153, 155-157, 184, 206-207, 223, 226, 230, 241, 259-262, 265-268, 270-275, 333, 371, 383-384, 442-444, 482, 491, 498, 544-546, 581, 587-588, 590, 648-649, 691-692, 724, 743-745, 748, 750-752, 814-815, 818, 848-849, 863-865, 869, 887, 913-914, 919, 952-953, 1026, 1036-1038, 1044, 1047-1048
Step potential, 14
Stereo receiver, 877, 913
Stiff voltage divider, 243, 1047
Stopband, 623, 1047
Storage, 34, 144, 315, 408, 413, 437, 441, 519, 527, 633
Strain gauge, 66, 73, 249, 253, 968, 975, 978-983, 1000-1002, 1005, 1007
Stray capacitance, 520-521
stray capacitances, 521
String, 101-102, 112, 120, 123, 139, 152, 156, 169, 1029
Substrate, 41, 316, 740, 769, 796-797
Subtraction, 4, 149, 379, 836
Successive approximation, 993, 1001
Sum, 4, 33, 98, 122-123, 132-133, 135-137, 139, 142, 146-147, 157, 171, 183-184, 190, 193-197, 202, 206, 213-214, 225, 265, 292, 359, 376, 416, 431-433, 444-445, 447, 461, 466, 473, 475, 524-525, 538-539, 548, 562-563, 569-571, 676, 881-883, 914-915, 918, 1044, 1047
Summing amplifier, 877, 881-884, 914-915, 917, 1047
Summing point, 885, 952
Superconductors, 368
Superheterodyne, 647
Superposition, 229, 264-266, 268-269, 276, 278, 283, 287, 292, 494-495, 945, 1047
Supply voltage, 144-145, 149, 274, 340, 414, 437, 440, 497, 500, 751, 771, 782, 807, 809, 814-815, 820, 822, 838, 864, 879, 1045
Surface area, 93, 148, 704, 739
Surface-mount, 45, 750, 864
Surge current, 729
Susceptance, 459, 473-476, 503-505, 513, 569-571, 573-574, 591-592, 625, 1041, 1043
Switch, 16, 24, 49-51, 55, 60-65, 67, 69, 72, 75, 97, 103-104, 167-168, 186, 203, 209-212, 287-288, 299, 303-304, 325, 332-333, 335, 337, 383, 414-415, 419, 421-423, 425-428, 448, 451, 453-454, 483, 522-523, 528-530, 534-536, 551-553, 598, 690-692, 717, 719, 733, 759, 765, 792, 826, 831, 986-989, 994-997, 1001, 1003, 1031, 1043
Switching regulator, 581, 583-584, 599
Switching speed, 923
Synchronous, 341, 367-370, 386-389, 397-398, 1047
Synchronous motor, 341, 367-370, 387-388, 397, 1047
system of units, 17, 1047
  SI, 17, 1047

T

T3, 348, 668, 720
T4, 348, 720
Tachometer, 305, 984, 1007
Tank circuit, 633-634, 636-639, 641-644, 654, 811-812, 1047
Tape, 311, 315
television, 84, 87, 89, 440, 603, 729
Television receivers, 440, 729
Temperature coefficient, 282, 402-403, 407, 414, 446, 449, 817, 846, 969, 972-973, 976, 1000, 1002, 1006, 1012, 1047
Temperature measurement, 968-969, 1003, 1006
Temperature-measuring circuit, 970-971
Terminal equivalency, 229, 254-255, 276, 1047
Tesla, Nikola, 300
Tesla (T), 298, 300, 302, 334-335
teslas (T), 303
Test instruments, 691, 957
Testing, 39, 97, 103-104, 333, 341, 346, 442-444, 545-546, 690, 692, 751
Thermal shutdown, 732-733
Thermistor, 48, 73, 249, 252-253, 282, 817-818, 962, 968-969, 976-978, 1000-1002, 1006, 1048
Thermistors, 47, 145, 817, 969, 976-977, 980, 1000, 1002
Thermocouple, 36, 72, 968-973, 976, 978, 1000-1004, 1006, 1008, 1041
Three-phase, 354-355, 365-369, 388-389, 392, 580
Three-terminal regulator, 733, 735
Three-wire bridge, 974-975, 980, 1001
Threshold, 15, 145, 685-686, 690, 697, 749-752, 797, 800, 803, 943, 998-999, 1030
Threshold circuit, 685-686, 690, 749-752
Threshold voltage, 145, 686, 999
Throw, 49-50, 312, 332, 974
time constant, 402, 421, 423-429, 439, 441, 444,

www.EngineeringBooksPdf.com

446-447, 451-452, 514, 517, 526-527, 529-531, 534-536, 545-548, 551-552, 661-666, 668-679, 692-694, 696-697, 731, 747, 890, 895, 960, 1046, 1048
Time delay, 441, 686, 690, 692
Timing diagram, 686
Tip, 15, 34-35, 47, 50, 59-60, 97, 100, 132, 153, 183, 193, 261, 330, 411, 413, 496-497, 564, 632, 667, 712
Toggle, 49-51, 333
Touch potential, 14
Track, 58, 498, 580, 586, 987, 1003
Tracking, 986-988, 990, 1005
Trailing edge, 370-371, 1048
Transconductance, 802, 806, 821-822, 927, 937-941, 943, 955-957, 959, 963, 1045, 1048
Transducer, 47, 251-254, 291, 543, 930, 936, 957, 968, 973, 975-976, 978, 980-983, 985-986, 1000-1002, 1006, 1008, 1044
Transformer, 300, 311, 321-322, 367, 387, 397, 645-646, 723-724, 733, 744-749, 758, 761, 763, 765, 913, 933, 935, 955, 983, 998, 1000, 1007, 1040-1041, 1043, 1045-1048
antenna, 645-646, 1043
autotransformer, 1040
balun, 1040
high frequency, 543
longitudinal choke, 543
step-down, 724, 1047
step-up, 724, 1047
tapped, 723-724, 727, 745-746, 758
three-phase, 367
Transformer coupling, 645, 933, 935, 955, 963
transformers, 319, 367, 724, 957, 1040-1041
Transient, 377, 402, 424, 440, 444, 446, 659, 661-662, 667-668, 676, 678, 692, 712, 714, 732
Transient current, 712, 714
Transient response, 732
Transistor, 28, 39, 50, 58, 134, 145, 289, 442, 583-584, 768-777, 780-781, 785, 787-789, 791-794, 796, 807, 810, 814-820, 822, 824-827, 831, 835, 845, 860, 868, 907-910, 914-915, 957, 998, 1040-1048
bipolar junction, 768-769, 773, 794, 802, 818-819, 822
Transistor switch, 583-584
Transistor tester, 814
Transmitter, 645
Transverse, 334, 1043
Triac, 968, 994, 996-998, 1001, 1003, 1007, 1048
Triangular waveform, 370, 374-375, 715, 919, 1047-1048
Trigger, 145, 378-380, 395-396, 443, 512, 679, 685-686, 690-691, 894-895, 916, 943, 960, 995-999, 1048
Trigger point, 894-895, 916, 943, 996
Trimmer, 413, 1048
Trivalent, 708-711, 752, 754, 762, 1048
Trivalent atom, 709, 711
Troubleshooting, 63, 77, 100-107, 112, 114-116, 152-155, 157, 165, 169, 171, 173, 178, 187, 203, 207, 219, 224-226, 247, 274-275, 290, 292-293, 389, 396, 399, 414, 448, 454, 495, 497-498, 510, 549, 553-554, 584-586, 596, 598-600, 688, 696-697, 717, 742-743, 747, 752, 760-761, 763, 813-814, 829-831, 851-852, 856, 860, 922, 1000, 1043, 1048
analog-to-digital converter, 119, 818, 1000
comparator, 851, 1000, 1048
plan, 100-102, 742
Tuned circuit, 739
Tuner, 440
Tuning capacitor, 812, 823
Turns ratio, 724, 727-728, 747, 761, 913, 1048
Two-wire, 937, 974

U

Unbalanced bridge, 229, 249, 251, 276, 282, 291, 1048
Units, 1-22, 39, 87, 90, 299, 305, 312, 334-335, 345, 367, 386, 423, 444, 503, 542, 590, 621, 750-751, 802
Unity gain, 808, 881, 897-898, 900-901, 914, 917, 929-931, 935, 959, 1048
Upper trigger point (UTP), 894

V

Valence, 25-30, 64-65, 704-709, 711, 714, 735, 739, 753, 755-756, 762, 764, 1041, 1043, 1045-1046, 1048
Valence band, 705-708, 739, 753, 755, 762, 764, 1043, 1046
Valence electron, 25, 27, 29-30, 65, 706-707, 714, 1048
Valence electrons, 26, 28, 30, 64, 704-705, 708-709, 711, 714, 756, 762, 1041, 1045, 1048
Valence shell, 26-27, 707
Varactor, 413, 703, 712, 735, 738-739, 742, 753-754, 756, 759, 763
Varactor diodes, 735, 738, 754, 756
Variable, 33, 41, 46-47, 65, 67, 72, 82, 113, 143-144, 167, 250, 261, 263, 356, 407, 409, 413-414, 454, 606, 668, 732-735, 738-739, 753-754, 763, 768, 825, 864, 938-939, 943, 946-947, 955, 1007, 1013, 1030, 1036-1037, 1045-1048
variable capacitors, 409, 413, 656
variable inductors, 523
Variable resistance, 47, 261, 768
Variable resistor, 46, 65, 72, 82, 143, 250, 668, 733, 939, 955, 985, 1045-1048
Venturi, 982-983
V-I characteristic curve, 715, 717-718
virtual ground, 855, 859, 881, 886-887, 889, 950-951, 975
Voice, 313-314
Volt (V), 24, 65
voltage, 2, 8, 14-16, 18, 23-75, 77-82, 84-87, 91-92, 95-115, 119-120, 123, 128-160, 162-173, 178-180, 182, 186-194, 198-207, 209-220, 223, 225, 235, 237-262, 264-278, 280-289, 291-292, 304-305, 308, 312, 315, 317, 319-328, 330-336, 338-340, 341-400, 402-431, 433-440, 442-455, 459-461, 463-474, 476-478, 480, 482-486, 489-491, 493-505, 507-511, 514, 521-523, 526-528, 530-531, 533-537, 539-542, 545-552, 554, 557-564, 566-570, 572-574, 576-588, 590-598, 608-609, 611-614, 616-620, 623-626, 629, 632, 638-644, 648-652, 654-656, 663-686, 690, 710-717, 719-739, 741-761, 763-764, 768-769, 775-790, 792-809, 811-831, 833, 835-869, 871, 873-874, 877-894, 896-898, 901, 905-919, 921-924, 927-963, 969-978, 983-991, 993-995, 997-1007, 1019-1022, 1025, 1029-1031, 1036, 1040-1048
applied, 14, 37-38, 40, 47, 50, 62, 64, 66, 79, 84, 92, 95, 103-104, 107, 110, 120, 128, 135-137, 139, 193, 217, 223, 235, 253-254, 268-269, 277, 322, 330-331, 363, 391, 405-406, 412, 430-431, 435, 437, 439, 447-448, 452, 459-461, 527, 540, 545-546, 548-549, 552, 594, 629, 648, 664-666, 669-672, 692-695, 717, 754-755, 778-779, 786, 796, 811, 823, 825, 840-841, 843, 847-850, 878-881, 908-910, 918-919, 939, 958, 995, 1042-1045
back emf, 328, 330-331, 336, 340, 369, 1040
breakdown, 406-409, 411, 444, 710, 714-716, 719, 735-737, 742, 752-754, 756, 775, 948, 999, 1048
derivative of, 692, 914-915, 1042
generators, 36, 268, 298, 319, 321, 324-325, 327-328, 330, 334, 338-339, 341-342, 346-347, 366, 386, 392, 397, 985
Hall voltage, 304-305, 334, 1043
parallel circuits, 178-180, 182, 184, 186-194, 198-207, 209-220, 223, 225, 229-230, 235, 237-262, 264-278, 280-289, 291-292, 476, 585
phase, 15, 341, 351, 353-357, 359, 365-369, 386-389, 391-392, 400, 429, 435, 437, 459-461, 463-474, 476-478, 480, 482-486, 489-490, 494-495, 497, 502-505, 507-511, 514, 540, 542, 557-564, 566-570, 572-574, 576-577, 579-581, 590-592, 594-595, 597-598, 604-606, 608-609, 611, 613-614, 616, 625-626, 629, 632, 649-652, 656, 743, 747, 784, 807-809, 819, 823, 831, 850, 865, 892-893, 994, 1044-1046
series resonant circuit, 619, 639, 651-652
sources in series, 119, 132, 157, 163, 170
supply, 16, 33, 36, 39, 50, 72, 77, 84-85, 97-100, 105-106, 112, 131, 133-134, 144-145, 148-149, 164, 178, 209-212, 215, 223, 273-275, 283, 328, 340, 355, 366, 370, 388, 437-440, 445, 452, 500, 583, 723, 728-730, 732-734, 742-745, 749-753, 756, 771, 807, 809, 814-815, 822, 836-838, 879, 907, 913, 916, 933-934, 939-941, 951-952, 1036, 1041-1042
terminal, 32, 46-48, 54, 56-57, 65, 69, 75, 96, 104, 120, 134, 143, 148, 155-158, 167, 172, 188, 193, 229-230, 254-255, 276, 333, 711-712, 716, 732-733, 735, 738, 742, 769, 771, 773, 805, 818, 824, 847, 850-851, 855, 907-908, 911, 914, 937, 952, 970-971, 1001-1002, 1036, 1040-1041, 1045-1048
Thevenin voltage, 907
voltage divider, 119, 139-140, 143-146, 156-158, 163, 167, 171, 242-247, 272-274, 278, 287-288, 433-434, 442, 447, 471, 494, 567-568, 641, 643, 771, 879, 892, 908, 946, 1047-1048
Voltage drop, 77, 95-96, 106-107, 111, 115, 128, 130-131, 135-143, 149, 152, 163, 240, 256-257, 271, 277, 280, 360, 460, 495, 527, 535, 611, 792, 798-800, 855, 972
Voltage gain, 768, 777-786, 802, 804-809, 819-821, 823, 825-826, 828-831, 833, 835, 837-838, 842-845, 847-848, 851-856, 858-859, 864-866, 873, 893, 898, 908, 916, 930-932, 939, 941-943, 952-953, 955-959, 963, 976, 1041, 1045
high-pass filter, 963
Voltage probe, 381, 483
Voltage reference, 732, 1030
Voltage regulation, 728-729, 738, 754
Voltage regulator, 273, 366, 732, 734, 744-745, 748, 750, 759, 906-908, 914-916, 1047
Voltage regulators, 728, 738, 877, 905, 913, 921, 923
Voltage-controlled oscillator, 754
Voltage-divider bias, 442, 771, 773, 777, 784, 794, 801, 803, 830
Voltage-divider bias configuration, 771
Voltage-divider rule, 853, 907
Voltage-follower, 835, 852, 854, 857-860, 862, 865-867, 874, 897-898, 901, 948, 1048
Voltage-to-current converter, 950-951
Voltmeter, 24, 55-57, 61, 64-65, 69, 73, 75, 85, 102, 107-108, 143, 153, 159-160, 163, 173, 189, 209, 215-216, 229, 239, 247-249, 252, 255, 269-272, 274-275, 278-279, 289-291, 390, 449, 498, 506, 521, 549-550, 593, 719, 760, 949, 1047-1048
Volume, 144, 982
Volume control, 144
VOM, 249, 281

W

Watt, James, 89
watt (W), 77, 106, 485, 1045, 1048
Wattmeter, 487-488
Waveform, 329, 341-342, 344, 346-347, 354-355, 363, 370-381, 383-384, 386-390, 392-396, 398, 428, 453, 465-466, 489, 512, 533-534, 562, 564, 566-568, 580-581, 592, 627, 659-661, 669-670, 674-677, 683-684, 694-695, 715, 720, 726, 747, 758-759, 776, 778-779, 786, 807-809, 816, 831, 880-881, 888, 890, 913, 915, 918-919, 923, 945-946, 952, 956, 960-961, 988-989, 996-997, 1000, 1005-1006, 1025, 1029-1031, 1040, 1042-1048
waveforms, 341-342, 345-346, 353-355, 362, 370-375, 377, 379-381, 387, 389, 392, 398, 428, 441, 460, 466, 470-472, 483-484, 502, 530, 562, 566-568, 592, 595, 598, 631, 662, 666-667, 677, 679-680, 683, 685, 693, 696, 725, 758-759, 879, 895-897, 960, 992, 1005-1006, 1031, 1044-1045
alternating, 341-342, 345-346, 353-355, 362, 370-375, 377, 379-381, 387, 389, 392, 398, 1031
nonsinusoidal, 341, 370, 375, 392, 398
Wavelength, 835, 863-864
Weber (Wb), 298, 300, 334-335, 1048
Weight, 47, 368, 884-885, 914, 917, 919
Wheatstone bridge, 229, 249-251, 253-254, 259-261, 276, 278, 281, 291, 977, 1002, 1048
Winding, 314-315, 328, 330, 338, 365, 367-368, 400, 517-518, 520-521, 523, 527-528, 533, 535,

www.EngineeringBooksPdf.com

540-542, 545, 547-548, 552-553, 558, 582, 611, 617-618, 621-622, 624, 630-631, 634-636, 641, 643-644, 653-655, 723, 725, 744-745, 747, 749, 763, 765, 1040-1041, 1047-1048
Winding capacitance, 518, 520-521, 523
Winding resistance, 328, 330, 517-518, 520-521, 523, 527-528, 533, 535, 540-542, 545, 547-548, 552, 558, 582, 611, 617-618, 621-622, 624, 630-631, 634-636, 641, 643-644, 653-655, 1048
Wiper, 46-47, 143-144, 146, 825, 872, 953, 1048
Wire, 15, 17, 28, 36, 38, 40, 42, 48-49, 51-55, 65, 70-71, 113, 118, 120, 148, 152, 154, 159, 172, 188, 204, 253-254, 305, 307-308, 310-311, 313-314, 317-318, 321, 323-326, 329, 336-337, 392, 410, 412-413, 423, 497-500, 517-521, 523, 547-549, 553-554, 580, 585-586, 769, 798, 814, 937, 970, 973-975, 1001-1002, 1040-1041, 1043-1044
Wire resistance, 53, 254, 307, 974-975, 1001-1002
Wireless, 300, 973
Write, 5, 12, 82, 90, 136-137, 146, 149, 311, 315-316, 421, 526

Z

Zener breakdown, 735, 752, 754, 756, 977, 1048
Zener current, 737
Zener diode, 703, 714, 735-738, 742, 749-750, 752-754, 756, 759, 765, 908, 947, 962, 965, 977-978, 1048
Zener equivalent circuit, 737
Zener impedance, 736-738, 754, 759
Zener test current, 736-737
Zener voltage, 737-738, 909-910, 921, 957
Zener voltage regulation, 738
Zero bias, 794, 800
Zero-level detection, 878, 916
Zero-voltage switch, 997, 1001

www.EngineeringBooksPdf.com