How to Build and Use a VHF Wattmeter

You can measure SWR and RF power at VHF with an inexpensive homemade instrument. Here's a VHF power bridge that you can build during a weekend.

By Doug DeMaw, W1FB
PO Box 250
Luther, MI 49656

I have been asked a number of times for a *QST* article that would enable someone to build a good VHF SWR/power meter. Recently, I received a letter from a ham who was disappointed to find that an instrument of this kind was not detailed in *The ARRL Handbook*. I happened to need a unit of this type in my own lab, so I developed the power bridge described here. It works nicely on 6 and 2 meters, and its performance at 10 meters is on a par with that for the other two bands. There are no exotic components in the circuit. The most expensive part is the meter, the cost of which depends on the instrument you select, and whether you acquire it by scrounging, swapping or driving a hard bargain with some friend who has one to spare! The cabinet is homemade from sections of PC-board stock, and this represents still another means of shaving the total cost of the project. By being innovative, you can keep the price of your unit down.

Types of SWR Indicators

The two most popular circuits used for measuring SWR and RF power at VHF are the *directional* and the *reflectometer* types of sampling units. These devices are inserted in a coaxial transmission line and function as part of the feed line. Because of this, they must exhibit the characteristic impedance of the transmission line in which they are used. If not, the readings will be inaccurate. Therefore, the SWR bridge should look like 50 ohms when it is inserted in a 50-ohm feed line, such as RG-8 or RG-58 coaxial cable.

Also, the sampling elements in the circuit must not absorb significant RF power, although some power (minuscule) is needed to operate the indicating circuit. In other words, the instrument should not have a high *insertion* loss.

RF bridges and other styles of line samplers provide sensing circuits that allow you to observe *forward* and *reflected* energy on a transmission line. The better the match between the feed line and the antenna (at the antenna terminals), the lower the reflected power reading on the meter. As the reflected reading is reduced, the forward reading increases. When there is no reflected-power indication remaining (with a full-scale forward reading), the SWR is said to be 1:1 (ideal). This means that with an SWR of 1, there will be maximum RF-power transfer from the transmitter to the antenna.

Fig 1 shows a simple type of VHF SWR instrument. This directional SWR indicator was first published in a *NASA Tech Brief,* and was popularized in *QST* as the "Monimatch" during the 1960s by Lew McCoy, W1ICP. It is a simple instrument to build and use, but it is frequency sensitive. That is, as the operating frequency is increased, say, from 50 to 144 MHz, the instrument responds more readily to lower power levels. This is because the pickup lines (L1 and L2) are significantly longer electrically at the higher operating frequency, and, therefore, pick up more RF energy than at the lower frequency. For this reason, it is practical to calibrate this type of instrument for RF power only for one HF or VHF band, or for only a portion of a given band. For routine SWR testing, however, the Monimatch is entirely acceptable.

The suggested circuit and PC layout of Fig 1 follows the pattern for most VHF/UHF directional SWR indicators that are used by amateurs. The sensing circuit is built on double-sided PC board. L2, in combination with the ground plane on the reverse side of the board, forms a strip line with a characteristic impedance of approximately 50 ohms. (This assumes that the PC board is of nominal 1/16-inch thickness and that it uses glass-epoxy insulating material.) L1 and L3 are the RF sampling lines. They, too, are arranged for a 50-ohm characteristic impedance. This circuit is suitable for use at 50, 144, 220 and 432 MHz if short leads are used throughout.

Fig 1B shows a full-scale PC-board pattern of the etched side of the board. The parts placement is indicated on the pattern. The leads from J1 and J2 to the PC board should be as short as practicable. Ideally, the terminals that protrude from the rear of the coaxial connectors should fit into the pads at the ends of L2 to allow the PC board to be mounted directly to the two coaxial jacks. If this is done, be sure to ground the PC board (there are ground conductors on both sides of the board) to the common ground of the equipment cabinet.

Generally speaking, the principle of line sampling shown in Fig 1 is the method used in the popular Bird Thruline® wattmeters. Because of the frequency sensitivity of this type of instrument, we can understand why Bird has a variety of plug-in elements or slugs for various frequency ranges and power ratings. The circuit in Fig 1 is *not* a bridge type of meter.

A Bruene RF Bridge for VHF

Many years ago, Warren Bruene of Collins Radio developed a true RF-bridge circuit that set the standard for most of the

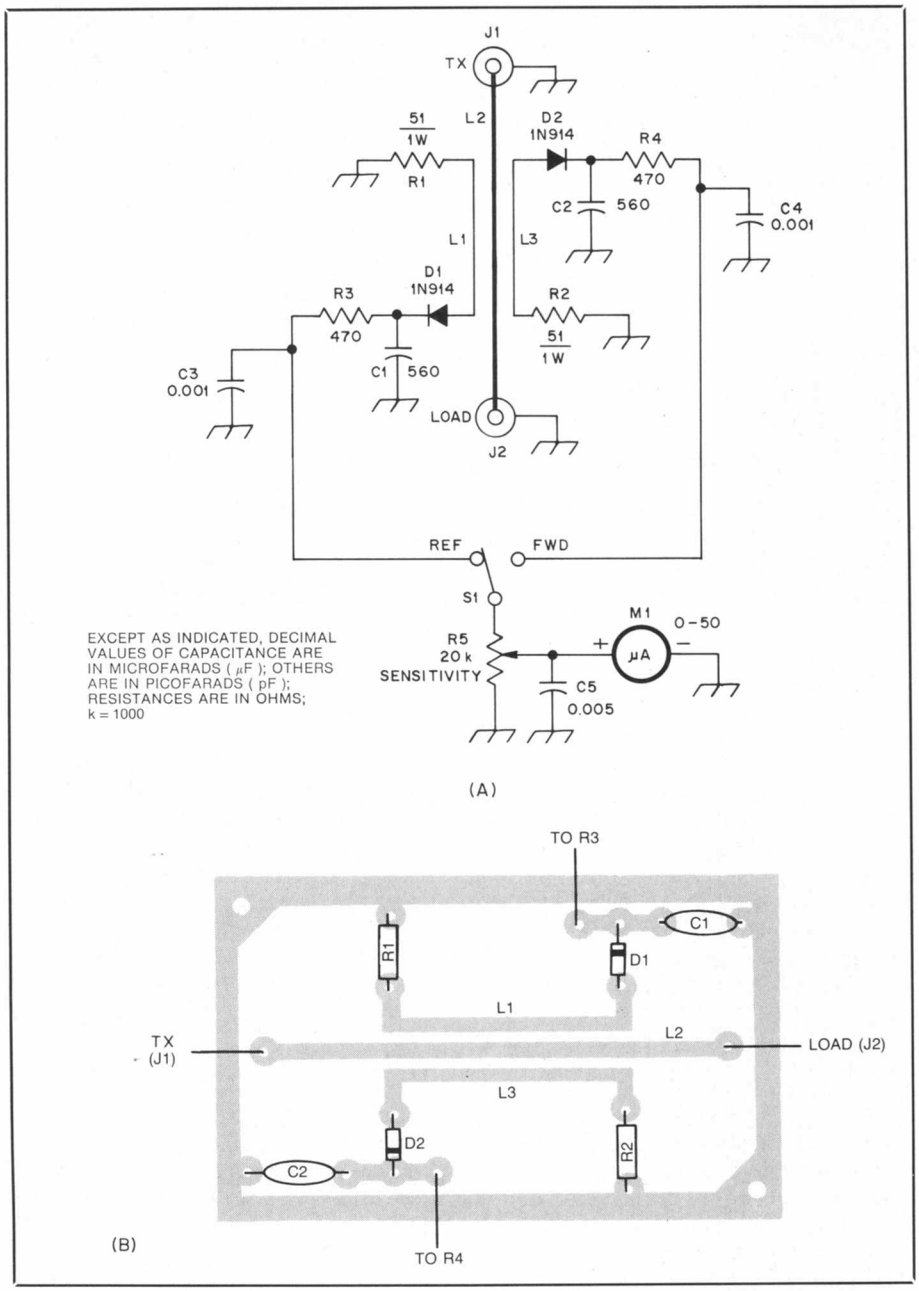

Fig 1—Schematic diagram of a suggested directional SWR meter (A). Capacitors are disc ceramic. R1 and R2 are ½-W, 5% carbon-composition units. R3 and R4 are ½-W, 10% tolerance resistors. R5 is a linear-taper carbon-composition panel control. M1 can be a 50, 100 or 200-μA dc meter. The 50-μA movement will provide the greatest sensitivity. At B, a full-scale template for the RF sensing circuit of the instrument. Double-sided PC board is required (see text). Parts placement is shown on the template.

HF and VHF RF power meters used by amateurs and industry.[1] The circuit has become known as the "Bruene bridge." A fairly detailed discussion of this and other similar circuits, along with diagrams that show the electrical equivalents of true bridges, is presented in *The ARRL Antenna Book*.[2] You may want to review this material toward a better understanding of how these circuits work.

[1]Notes appear on page 19.

Fig 2 shows a hybrid schematic diagram of the circuit I use for my VHF SWR/power meter. L1 and L2 are shown pictorially to emphasize how the line section and toroidal inductor are related. In effect, L1 is the primary winding (equivalent to a single turn). It is simply passed through the center of the toroid core that contains the transformer secondary winding, L2. C1 through C4 form part of the bridge circuit. C2 is adjustable. It permits us to balance the bridge for a 50-ohm load at J2.

The forward and reflected RF current components that flow from J1 to J2 along L1 are rectified by D1 and D2 to provide dc for operating M1. C5 serves as a frequency-compensating capacitor to improve the bridge accuracy at the high end of the operating frequency range.

C6 through C11 are part of the decoupling circuit. They are used with R3, R4, Z1 and Z2 to prevent RF energy from reaching M1. S2 selects one of three potentiometers (R5, R6 or R7) that affect the full-scale reading of M1. R5 is adjusted to provide the low-range, full-scale RF-power reading at M1 (I chose 25 W), and R6 is used to calibrate the meter for some higher full-scale reading (250 W in my unit). R5 and R6 are PC-mount trimmer controls. R7 is panel mounted to serve as the SENSITIVITY control during SWR measurements.

L2 is bifilar wound, as indicated in the inset of Fig 2. This winding method is superior to using a single winding with a center tap. The advantage of the bifilar winding (two wires in parallel) is that the electrical center tap is more precise than it might be if L2 were wound in a conventional manner. This is an especially important consideration at VHF, where bridge balance is critical. The capacitive arm of this circuit is similar to that used in the Heath HM-2102 VHF wattmeter.

Meter Choice for M1

The mere sight of the expensive Simpson meter on the front of my VHF bridge may startle you! I hasten to say that I bought this meter for $3 at a ham flea market in 1986. The new price for this meter would knock your socks off! I like large meters—they are an aid to tired eyes and declining eyesight. There is no need to use a 50-μA meter, but the higher the full-scale rating in μA, the less sensitive your RF bridge will be. A 100- or 200-μA meter can be used with this circuit if you are willing to sacrifice low-power sensitivity. My 50-μA meter provides a full-scale reading at 1.2 W on 2 m with S2 in the SWR position and with R7 set for maximum sensitivity. This capability is useful for checking SWR with a hand-held 2-m transceiver.

You can use a physically smaller meter for M1, such as a surplus edge-reading FM tuning meter. There seems to be a variety of these instruments in the surplus electronics catalogs these days, so shop around for a bargain. Also, be on the watch for a good-quality microammeter when you are at flea markets.

Practical Matters

Single-sided PC board (glass-epoxy material recommended) must be used for the main sensing module (shown enclosed in shaded lines in Fig 2). Double-sided board would introduce considerable stray capacitance, and this might prevent you from balancing (nulling) the bridge.

I made my own boards using the Meadowlake Corp Tec-200 film process.[3] I am not aware of any supplier of PC boards or kits for this project. I made my module on single-sided board and then soldered the module to a 2¾- × 2¾-inch piece of double-sided board that forms a mounting plate (see Fig 3). The module is perpendicular to the mounting plate, and two triangular-shaped PC-board brackets are soldered between the module and the mounting plate to ensure rigidity. The complete assembly is bolted to the rear wall of the equipment box with no. 4-40 screws. Two 1/2-inch holes, on 1-7/8-inch centers, are drilled through the back wall of the equipment box and mounting plate to accommodate J1 and J2. A full-size etching template for the sensing module and R5/R6 mounting board is shown in Fig 4, with parts placement shown in Fig 5.

L1 is a 1-7/8-inch length of RG-58 coaxial cable. Note that the shield braid is grounded at only one end of L1 (the input end). The cable braid serves as a Faraday shield to discourage harmonic currents from passing to the L2 secondary winding through capacitive coupling. I use a 0.50-inch-OD toroid core for L2, and the center hole allows ample clearance for L1.

The winding for L2 of Fig 2 is made from two 12-inch lengths of no. 26 enameled wire. Clamp one end of the wire pair in a vise, and secure the other two ends in the chuck of a hand drill. Operate the drill until the two wires are twisted about three turns per inch (not critical). Now wind eight turns of the twisted pair on the toroid core. Space the turns evenly around the toroid. Use enameled wire of two colors, or paint one wire a color of your choice to ensure correct phasing of the windings (see Fig 2 inset). Snip off the excess wire after the coil is wound, leaving about one inch of pigtail on each of the three wires.

R5 and R6 are assembled on a separate PC board, and mounted close to S2 near the front panel. This helps to minimize the lead lengths for the switching circuit.

My cabinet is 5 × 4 × 4-5/8 inches (HWD). I used steel wool to clean the copper surfaces, and after soldering, I used Kepro tin-plating solution to prevent tarnishing later on. A 100-W soldering iron or gun is required to generate enough heat to produce a smooth, rapid flow of solder when joining the cabinet walls. A 40-W pencil iron will cause rough-looking solder seams.

You can see in Fig 3 that the cabinet has a stabilizing strut soldered between the front and rear panels (top). Similarly, a strip of PC stock is soldered between the front and rear panels of the cabinet on the bottom of each side. These strips ensure added rigidity and provide anchoring points for the PC-board cabinet cover, which is fastened to the struts by means of no. 6 sheet-metal screws. Two triangular PC-board stabilizing brackets are soldered inside the cabinet cover (right and left sides, center) to keep the lid from collapsing under stress.

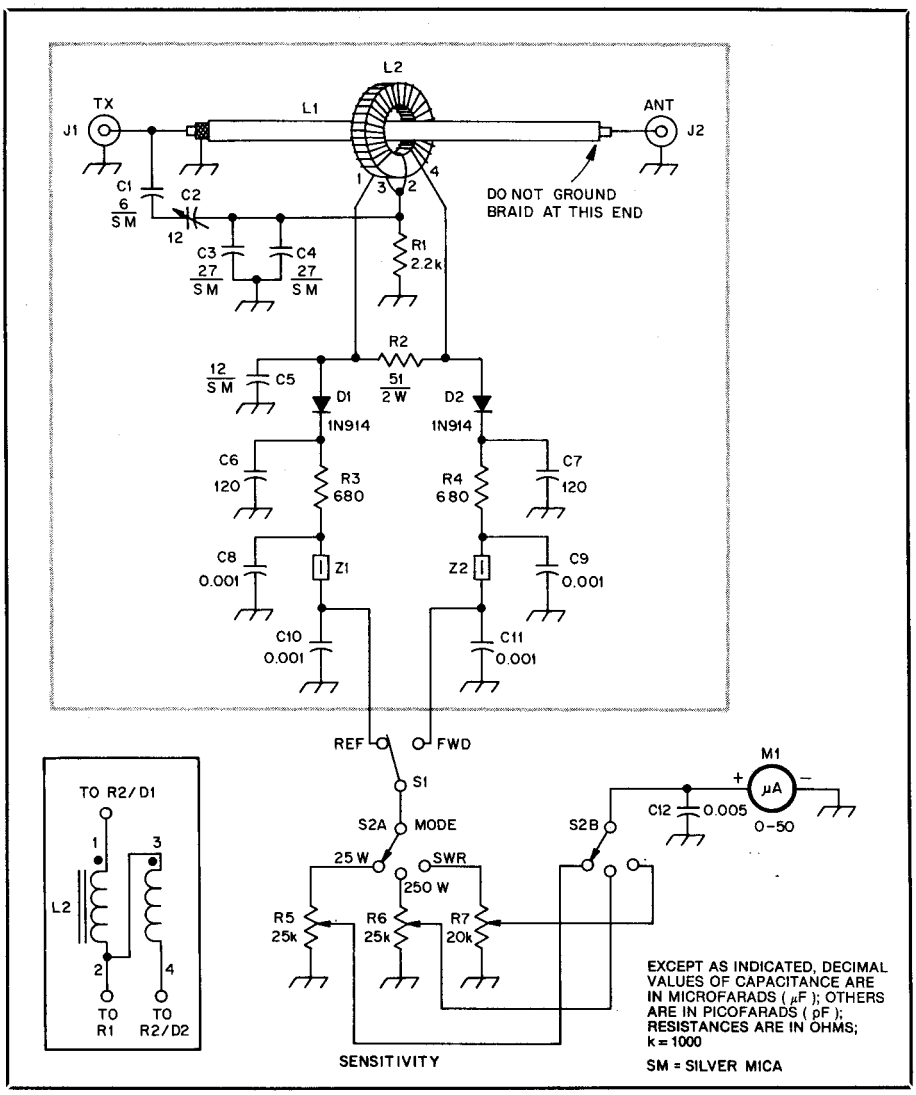

Fig 2—Schematic diagram of a practical Bruene bridge for VHF. Fixed-value capacitors are disc ceramic or silver mica. Resistors are ½-W carbon-composition types except for R2, which can be a 1- or 2-W, 5% carbon-composition type.

C2—Miniature 12- or 15-pF trimmer with a minimum capacitance not greater than 2.5 pF, E. F. Johnson T-9-5 air trimmer or equivalent.
D1, D2—1N914 or equivalent silicon switching diode, matched for forward resistance with a VOM.
L1—1-7/8-inch length of RG-58 coaxial cable
L2—8 bifilar turns of no. 26 enam wire on an Amidon FT-50-61 ferrite core (125 μ_i).
M1—Dc microammeter (see text). 3¼- × 3¼-inch Simpson (50 μA) or equivalent.
R5, R6—PC-mount 25-kΩ carbon-composition control.
R7—Panel-mount 20-kΩ linear-taper carbon-composition control; 25 kΩ acceptable.
S1—SPDT toggle.
S2—Two-pole, three-position rotary wafer switch.
Z1, Z2—Amidon miniature ferrite bead (950 μ_i).

The completed cabinet and cover are first painted with gray automotive undercoat primer. After this coat is thoroughly dry, you may apply the labels for the panel controls. I used press-on lettering decals, then sprayed the front and rear panels with clear acrylic spray. The acrylic coating protects the decals and helps prevent finger marks on the gray panel. The top cover was given a coating of dull black spray paint after the primer had dried for two hours. This provides a nice, attractive two-tone black-and-gray finish for the instrument.

The total cost of materials for my cabinet (excluding labor!) was roughly $1. That sure beats paying $7 or $8 for a commercial box, which might not have the proper shape for this project.

Calibration

Nulling the Bridge

Balancing the bridge requires feeding 15 W, or more, of 2-m RF energy into J1. Terminate J2 with a good-quality 50-ohm

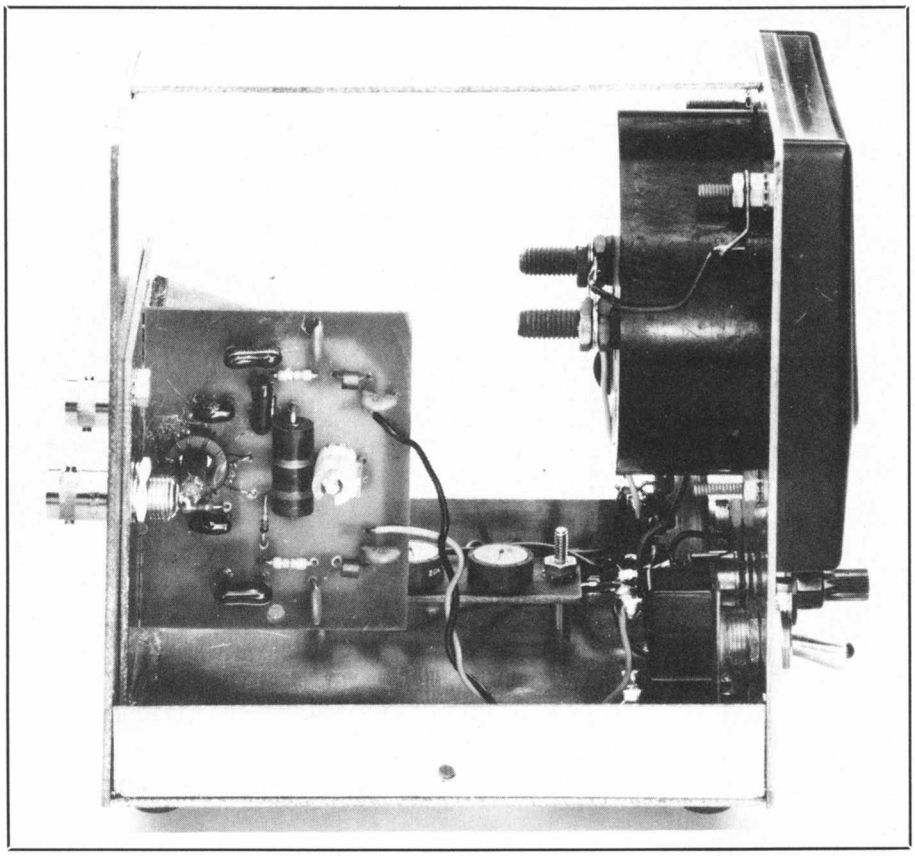

Fig 3—Photographic view of the interior of the VHF wattmeter.

dummy load, such as the Heath Cantenna. Place S1 in the FWD mode, set S2 to SWR and adjust SENSITIVITY (R7) for minimum sensitivity (fully counterclockwise). Apply transmitter power and set R7 to provide a full-scale reading on M1. Next, switch S1 to REF. Ideally, the meter should read zero, but it's unlikely that it will. Use an insulated alignment tool to adjust C2 for a zero reading. The meter reading should drop to zero within the range of C2. If not, check your circuit for errors and look for bad solder joints or unwanted solder bridges between the PC-board conductors. If all is okay, and the desired null is obtained, turn off the transmitter and exchange the coaxial-cable connections at J1 and J2. Reapply power, and verify that the meter reads zero when S1 is in the FWD mode and full scale in the REF mode. If so, the bridge is properly nulled.

RF Power Calibration

You will need a variable source of RF power to calibrate the meter for the 25-and 250-W ranges. The easiest method of calibrating the instrument is to use a wattmeter of known accuracy. Place the wattmeter in series with your homemade unit. S1 must be in the FWD position for all RF power measurements. First, adjust R5 for a full-scale reading with 25-W input power. Then apply power to various power levels in the 0 to 25-W range, and record the readings. From this data, you may prepare a chart that shows the meter reading v known power in watts. Keep this chart for future reference.

Adjustments for the 250-W range are done in the same manner by setting R6 to provide a full-scale reading at 250 W. After calibrating the 250-W scale, recheck the 25-W calibration to make sure there is no interaction between the calibration circuits. There

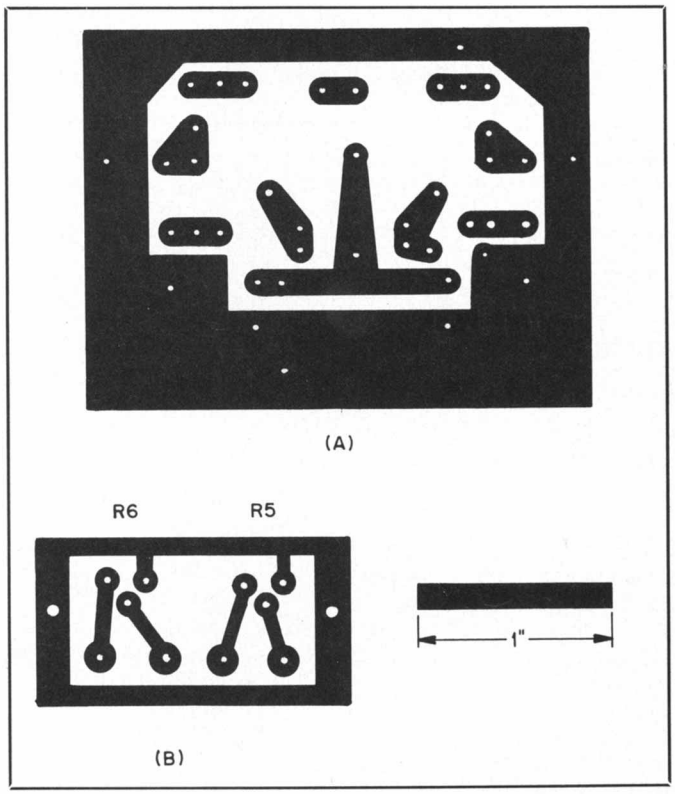

Fig 4—Circuit-board etching patterns for the VHF wattmeter. At A, the sensing module. At B, the R5/R6 mounting board. The patterns are shown full-size from the foil side of the board. Black areas represent unetched copper foil. Use single-sided board only.

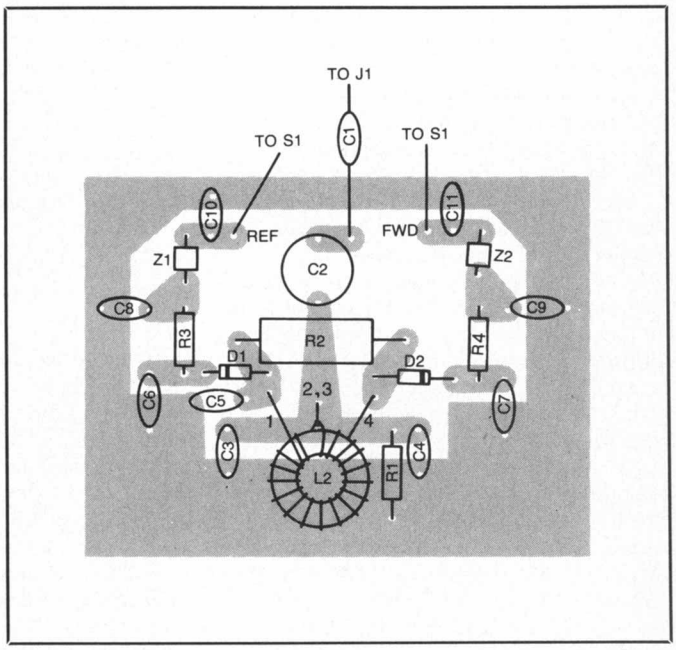

Fig 5—Parts-placement guide for the sensing module. Parts are placed on the nonfoil side of the board; the shaded area represents an X-ray view of the copper pattern.

should be none if your wiring is correct.

An alternative method of calibration is to use a VTVM or FET VOM with an RF probe to measure the RMS RF voltage across your 50-ohm dummy load. To determine the transmitter output power, use the standard formula:

$$P(W) = E_{(RMS)}^2/R_{(ohms)}$$

Thus, for an RMS voltage of 50, with a 50-ohm load, the power is 50 W.

If you are unable to come up with the 2-m power needed to calibrate the high-power scale, you can use your 6- or 10-m transmitter. The bridge should be nulled at 2 m, however, before doing this. If power calibration is done at 10 m, the accuracy will be reasonably close at 2 m. I checked this by setting the meter for full scale at 25 W on 2 m (SWR mode). This resulted in a reading of 35.4 V RMS across the 50-ohm load. I then used my 10-m transmitter to produce 35.4 V RMS across the dummy load (25 W). The needle of M1 was just slightly above full scale. This variation is close enough for most amateur applications.

Closing Remarks

If you're artistic, it is simple to make a new readout scale for your meter. The charts you plot for output power can be converted to a pair of scales on the meter face. Similarly, if you have suitable measuring equipment available, you may elect to add an SWR scale on the meter face. Because of the response of D1 and D2, the 25- and 250-W power scales will not yield linear or identical readings for the power increments. Therefore, two power scales are required.

An easy way to draw a new meter scale is to do it at two or three times scale, then reduce the artwork by means of a photocopy machine that can enlarge and reduce images. This makes the lettering job easier, and any imperfections will be less prominent after the reduction.

This short-term project should provide you with a few evenings of fun. You will enjoy the job even more if you can compete with the commercial boys by garnering all of the parts at bargain prices. It should be possible (depending on your bartering skills) to build this meter for less than $10. Certainly, it should cost you no more than $25. Good luck, and have fun!

Notes

[1]W. B. Bruene, "An Inside Picture of Directional Wattmeters," *QST*, Apr 1959, pp 24-28.

[2]G. Hall, Ed., *The ARRL Antenna Book*, 14th Edition (Newington, ARRL, 1982), pp 15-2 to 15-10.

[3]D. DeMaw, "Homemade Circuit Boards—Don't Fear Them," *QST*, Sep 1987, pp 14-16 and 23.